KEY NOTES:

1. EXISTING TUB TO BE REFURNISHED, WITH NEW DRAIN, SHOWER VALVES AND HEAD. TYPICAL UNLESS OTHERWISE NOTED.
2. EXISTING LAVATORY TO BE REMOVED AND REPLACED WITH NEW LAVATORY, WITH NEW FAUCET, SUPPLY PIPES, P-TRAP AND ANGLE STOPS. TYPICAL UNLESS OTHERWISE NOTED.
3. EXISTING WATER CLOSET TO BE REMOVED AND REPLACED WITH NEW, WITH NEW SUPPLY PIPE, ANGLE STOP AND WAX RING. TYPICAL UNLESS OTHERWISE NOTED.
4. NEW COFFEE BAR AREA, PROVIDE NEW FIXTURES WITH NEW SANITARY, VENT, HOT AND COLD WATER PIPING SYSTEMS. (CONNECT TO EXISTING SYSTEMS)
5. NEW UNITS BATHROOM, PROVIDE NEW FIXTURES WITH NEW SANITARY, VENT, HOT AND COLD WATER PIPING SYSTEMS. (CONNECT TO EXISTING SYSTEMS)
6. NEW UNITS BATHROOMS AND PROVIDE NEW FIXTURES WITH NEW SANITARY, VENT, HOT AND COLD WATER PIPING SYSTEMS. (CONNECT TO EXISTING SYSTEMS)
7. NEW SEATING AREA AND JUICE BAR, PROVIDE DECK DRAINS AND HOSE BIB IN SEATING AREA AND SANITARY, VENT, HOT AND COLD WATER PIPING SYSTEM IN JUICE BAR AREA.
8. NEW KITCHEN AREA, PROVIDE SANITARY, GREASE, HOT AND COLD WATER PIPING SYSTEM AND 1,250 GALLON GREASE TRAP.
9. 4" SANITARY PIPE FOR NEW BAR. REFER TO SHEET P2.10 FOR CONTINUATION.
10. REFER TO SHEET P2.10 FOR CONTINUATION.
11. NEW GAS PIPE FROM EXISTING GAS METER.
12. NEW TANKLESS GAS WATER HEATER.
13. GAS RISER UP FOR TANKLESS GAS WATER HEATERS.
14. NEW 2" CONDENSATE PIPE RUNNING AT CEILING TURN DOWN.
15. NEW HOT, COLD AND HWR PIPES FROM FLOOR BELOW.
16. COLD WATER AND GAS PIPE TURN DOWN.
17. NEW 1" CONDENSATE PIPE RUNNING AT CEILING TURN DOWN.
18. GAS PIPE TURN DOWN.
19. 3" FIRE SPRINKLER DRAIN RISER.
20. 3" FIRE SPRINKLER DRAIN PIPE TURN DOWN.

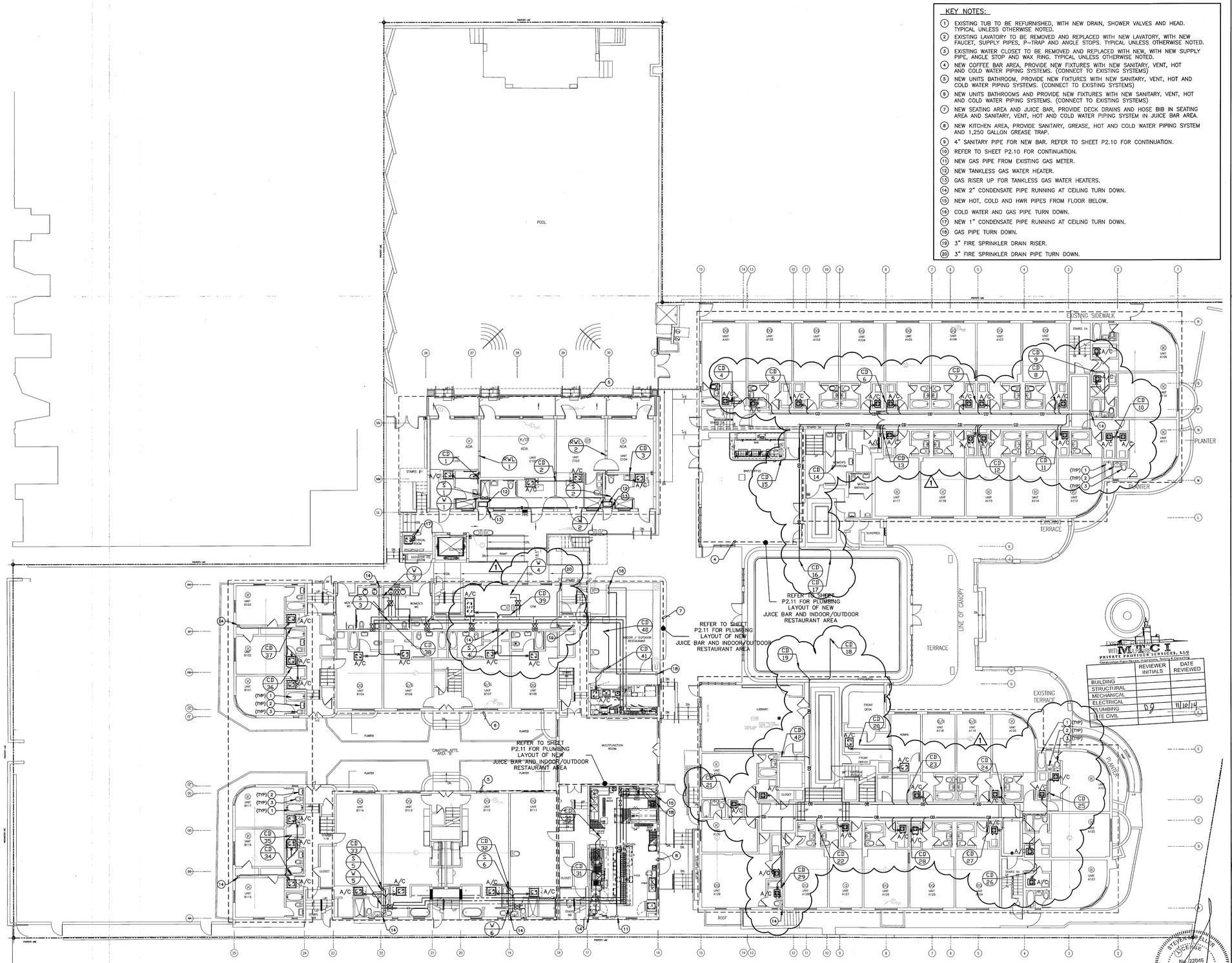

GROUND FLOOR PLUMBING PLAN

SCALE: 3/32"=1'-0"

MAY 09 2014

STEVEN FELLER P.E., P.L.
FLORIDA P.E. Reg. # 22046
Certificate of Authorization # 00003427
500 N.E. THIRD AVENUE
FORT LAUDERDALE, FLORIDA 33301
PH: 954.467.1402 FAX: 954.467.5752
e-mail: fellerpe@fellerpe.com
JOB # 13153

APPROVED MIAMI BEACH FIRE DEPARTMENT

HADDON HALL
1500 COLLINS AVE

MIAMI BEACH, FL

KEYPLAN N.T.S.

REVISIONS

NO.	DESCRIPTION	ISSUE DATE
1	PROGRESS TO 100% CD SET	02/07/2014

100% CONSTRUCTION DOCUMENT SET

NORTH SEAL

Jonathan Cardello
Lic. # AR93391

ADD Inc Architecture Interiors Planning

One Biscayne Tower
Suite 1670
Two South
Biscayne Boulevard
Miami, Fl 33131
T. 305.482.8700
F. 305.482.8770
www.addinc.com
Lic. # AA26001507

Boston Miami

JOB NUMBER: 13036.00
CHECKED BY:
ISSUE DATE: MARCH 14, 2014
SCALE: AS NOTED

SHEET TITLE

GROUND FLOOR PLUMBING PLAN (PIPE AT CEILING)

SHEET NUMBER

P1.02a

COPYRIGHT ADD INC 2011

KEY NOTES:

1. NEW ROOF DECK AND SINK, PROVIDE DECK DRAINS FOR DECK, HOSE BIB, NEW SINK AND SANITARY, VENT, HOT AND COLD WATER PIPING SYSTEMS.
2. NEW ROOF DECK, PROVIDE NEW DECK DRAINS AND HOSE BIB.
3. 2" SANITARY PIPE DOWN FROM NEW JANITOR,S SINK. CONNECT TO EXISTING SANITARY, HOT AND COLD SYSTEM AT FLOOR BELOW.
4. 4" X 6" SCUPPER (TYP.). REFER TO ARCHITECTURAL DWGS. FOR DETAIL.

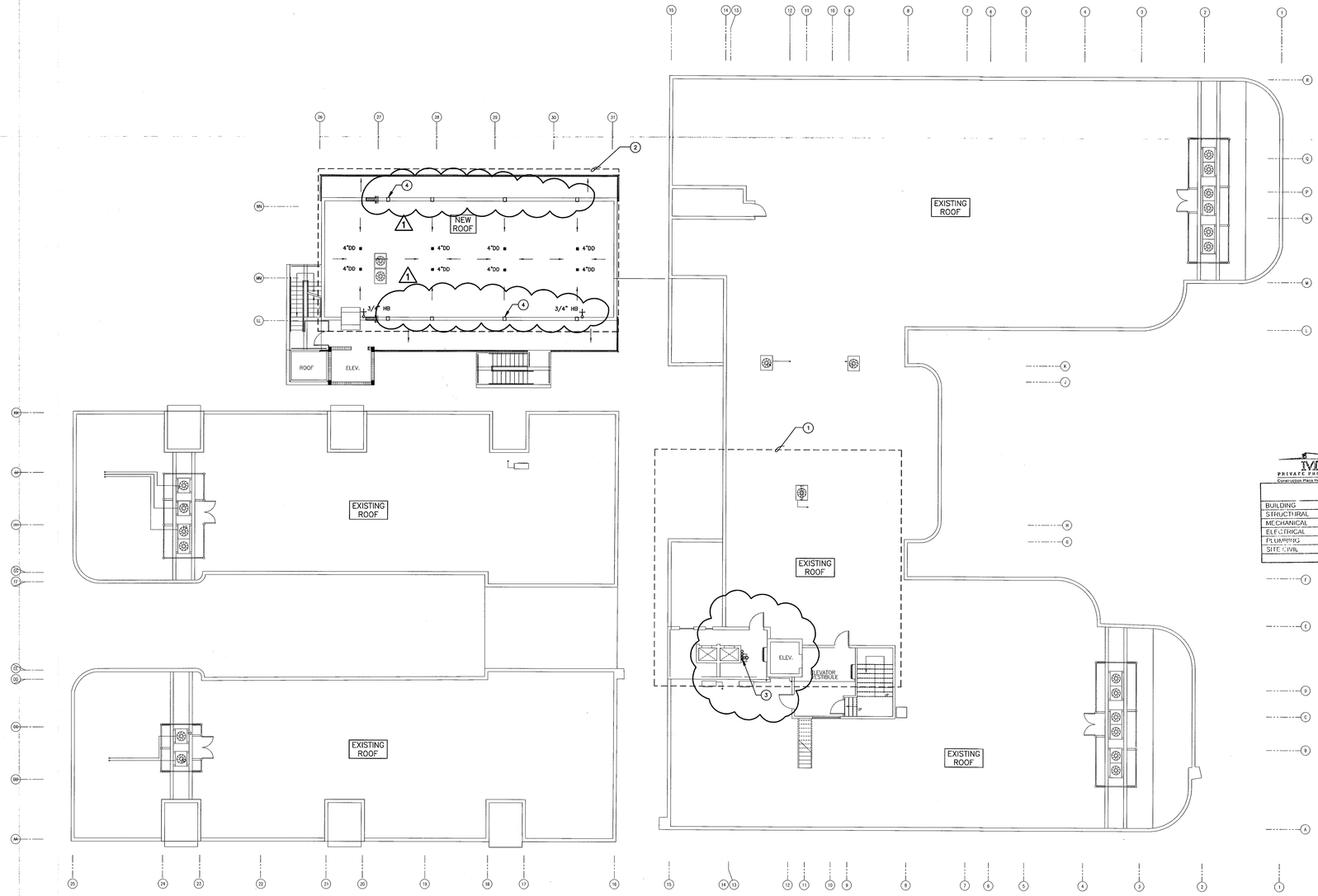

PLUMBING ROOF PLAN

SCALE: 3/32"=1'-0"

MCI
PRIVATE PROVIDER SERVICES, LLC
Construction Plans Review, Inspections, Testing & Consulting

	REVIEWER INITIALS	DATE REVIEWED
BUILDING		
STRUCTURAL		
MECHANICAL		
ELECTRICAL		
PLUMBING	DG	11/10/14
SITE CIVIL		

MAY 09 2014

STEVEN M. FELLER LICENSE No. 22046 STATE OF FLORIDA PROFESSIONAL ENGINEER

APPROVED MIAMI BEACH FIRE DEPARTMENT

STEVEN FELLER P.E., LLC
FLORIDA P.E. Reg. # 22046
Certificate of Authorization # 00003427
500 N.E. THIRD AVENUE
FORT LAUDERDALE, FLORIDA 33301
PH: 954.467.1402 FAX: 954.467.5752
e-mail: fellerpe@fellerpe.com
JOB # 13153

HADDON HALL
1500 COLLINS AVE

MIAMI BEACH, FL

KEYPLAN N.T.S.

REVISIONS

NO.	DESCRIPTION	ISSUE DATE
1	PROGRESS TO 100% CD SET	02/07/2014
1	PROGRESS TO 100% CD SET	02/07/2014

100% CONSTRUCTION DOCUMENT SET

NORTH SEAL

Jonathan Cardello
Lic. # AR93391

ADD Inc Architecture Interiors Planning

One Biscayne Tower
Suite 1670
Two South
Biscayne Boulevard
Miami, Fl 33131
T. 305.482.8700
F. 305.482.8770
www.addinc.com
Lic. # AA26001507

Boston Miami

JOB NUMBER: 13036.00
CHECKED BY:
ISSUE DATE: MARCH 14, 2014
SCALE: AS NOTED

SHEET TITLE

PLUMBING ROOF PLAN

SHEET NUMBER

P1.05

COPYRIGHT ADD INC 2011

File: E:\Current Projects\Haddon Hall\Haddon Hall_Plumbing.rvt
Date: 3/14/2014 3:36:38 PM

KEY NOTES:

1. EXISTING TUB TO BE REFURNISHED, WITH NEW DRAIN, SHOWER VALVES AND HEAD. ALL TUBS(TYPICAL) TO BE RECONNECTED TO EXISTING UNLESS OTHERWISE NOTED.
2. EXISTING LAVATORY TO BE REMOVED AND REPLACED WITH NEW LAVATORY, WITH NEW FAUCET, SUPPLY PIPES, P-TRAP AND ANGLE STOPS. NEW SHOWERS(TYPICAL) TO BE RECONNECTED TO EXISTING UNLESS OTHERWISE NOTED.
3. EXISTING WATER CLOSET TO BE REMOVED AND REPLACED WITH NEW, WITH NEW SUPPLY PIPE, ANGLE STOP AND WAX RING. NEW WATER CLOSETS(TYPICAL) TO BE RECONNECTED TO EXISTING UNLESS OTHERWISE NOTED.
4. NEW BAR AREA, PROVIDE NEW FIXTURES WITH NEW SANITARY, VENT, HOT AND COLD WATER PIPING SYSTEMS. (CONNECT TO EXISTING SYSTEMS)
5. NEW UNITS BATHROOM, PROVIDE NEW FIXTURES WITH NEW SANITARY, VENT, HOT AND COLD WATER PIPING SYSTEMS. (CONNECT TO EXISTING SYSTEMS)
6. NEW UNITS BATHROOMS AND PROVIDE NEW FIXTURES WITH NEW SANITARY, VENT, HOT AND COLD WATER PIPING SYSTEMS. (CONNECT TO EXISTING SYSTEMS)
7. NEW SEATING AREA AND JUICE BAR, PROVIDE DECK DRAINS AND HOSE BIB IN SEATING AREA AND SANITARY, VENT, HOT AND COLD WATER PIPING SYSTEM IN JUICE BAR AREA.
8. NEW KITCHEN AREA, PROVIDE SANITARY, GREASE, HOT AND COLD WATER PIPING SYSTEM AND 1,250 GALLON GREASE TRAP.
9. 4" SANITARY PIPE FOR NEW BAR. REFER TO SHEET P2.10 FOR CONTINUATION.
10. REFER TO SHEET P2.10 FOR CONTINUATION.
11. NEW GAS PIPE CONNECT TO EXISTING METER.
12. ELEVATOR SUMP PIT W/PUMP.
13. NEW GAS PIPE SLEEVE THROUGH WALL AND TURN UP.
14. 4" GREASE WASTE PIPE FROM NEW KITCHEN.
15. 1,250 GALLON GREASE TRAP.
16. 3" CONDENSATE PIPE @ 1/8" / FT CONNECT TO STORMDRAIN SYSTEM. REFER TO CIVIL DWGS FOR CONTINUATION.
17. 4" SANITARY PIPE @ 1/8" / FT CONNECT TO SANITARY SYSTEM. REFER TO CIVIL DWGS FOR CONTINUATION.
18. 6" STORMDRAIN PIPE @ 1/8" / FT CONNECT TO STORMDRAIN SYSTEM. REFER TO CIVIL DWGS FOR CONTINUATION.
19. NEW GAS PIPE RUNS BELOW GRADE WITH NO JOINT IN SLEEVE.
20. NEW WATER PIPE RUNS BELOW GRADE WITH NO JOINT IN SLEEVE.
21. NEW 2" CONDENSATE RISER.
22. CONNECT NEW 3" SANITARY PIPE TO EXISTING SANITARY SYSTEM.
23. NEW GAS RISER UP FOR TANKLESS GAS WATER HEATERS.
24. NEW GAS AND COLD WATER RISERS.
25. NEW COLD WATER PIPE UP.
26. NEW GAS, HWR HOT, AND COLD WATER PIPES UP.
27. 3" FIRE SPRINKLER DRAIN RISER.
28. FROM 3" FIRE SPRINKLER DRAIN PIPE AT BASEMENT LEVEL. REFER TO SHEET P2.10 FOR CONTINUATION.

PLUMBING CONTRACTOR TO FIELD VERIFY ALL EXISTING PLUMBING PIPES FROM THE UNITS ABOVE THIS AREA AND COORDINATE ALL EXISTING PIPING WITH NEW ARCHITECTURAL BACKGROUND AT THIS LEVEL.

TYPICAL ENLARGED UNITS PLUMBING PLAN

SCALE: 1/4"=1'-0"

KEY PLAN nts

HADDON HALL
1500 COLLINS AVE

MIAMI BEACH, FL

KEYPLAN N.T.S.

REVISIONS

NO.	DESCRIPTION	ISSUE DATE
1	PROGRESS TO 100% CD SET	02/07/2014

100% CONSTRUCTION DOCUMENT SET

NORTH

SEAL

Jonathan Cardello
Lic. # AR93391

ADD Inc Architecture Interiors Planning

One Biscayne Tower
Suite 1670
Two South
Biscayne Boulevard
Miami, Fl 33131
T. 305.482.8700
F. 305.482.8770
www.addinc.com
Lic. # AA26001507

Boston Miami

MTCI PRIVATE PROVIDER SERVICES, LLC
Construction Plans Review, Inspections, Safety & Consulting

	REVIEWER INITIALS	DATE REVIEWED
BUILDING		
STRUCTURAL		
MECHANICAL		
ELECTRICAL		
PLUMBING		
SITE CIVIL		

JOB NUMBER: 13036.00
CHECKED BY:
ISSUE DATE: MARCH 14, 2014
SCALE: AS NOTED

SHEET TITLE

ENLARGED UNITS PLUMBING PLAN

STEVEN M. FELLER LICENSE No. 22046 STATE OF FLORIDA PROFESSIONAL ENGINEER

MAY 09 2014

APPROVED MIAMI BEACH FIRE DEPARTMENT

STEVEN FELLER P.E., PL
FLORIDA P.E. Reg. # 22046
Certificate of Authorization # 00003427
500 N.E. THIRD AVENUE
FORT LAUDERDALE, FLORIDA 33301
PH: 954.467.1402 FAX: 954.467.5752
e-mail: fellerpe@fellerpe.com
JOB # 13133

SHEET NUMBER

P2.01

COPYRIGHT ADD INC 2011

File: K:\ADD Inc Projects\13036.00 Haddon Hall\Drawings\Plumbing\P2.01 Plumbed Typical Units.dwg | Layout: 201
Date: 5/9/2014 10:52:01 AM By: Jonathan Cardello

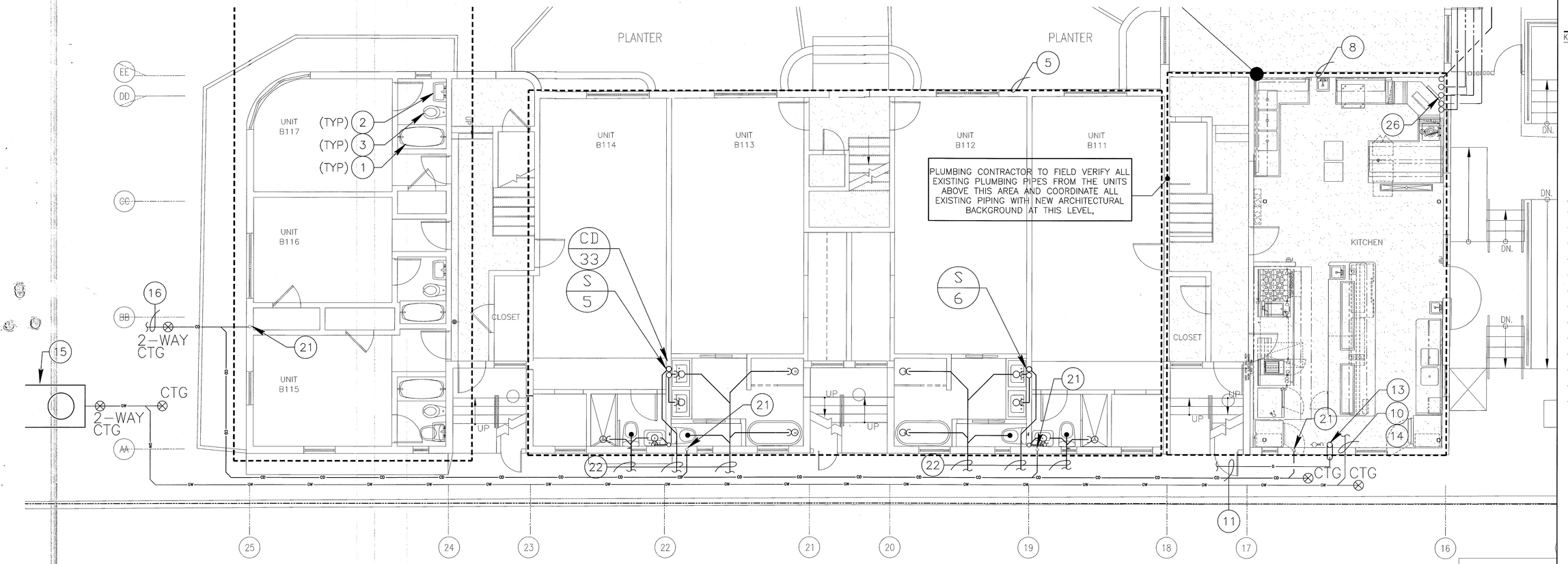

TYPICAL ENLARGED UNITS PLUMBING PLAN

SCALE: 1/4"=1'-0"

KEY NOTES:

1. EXISTING TUB TO BE REFURNISHED, WITH NEW DRAIN, SHOWER VALVES AND HEAD. ALL TUBS(TYPICAL) TO BE RECONNECTED TO EXISTING UNLESS OTHERWISE NOTED.
2. EXISTING LAVATORY TO BE REMOVED AND REPLACED WITH NEW LAVATORY, WITH NEW FAUCET, SUPPLY PIPES, P-TRAP AND ANGLE STOPS. NEW SHOWERS(TYPICAL) TO BE RECONNECTED TO EXISTING UNLESS OTHERWISE NOTED.
3. EXISTING WATER CLOSET TO BE REMOVED AND REPLACED WITH NEW, WITH NEW SUPPLY PIPE, ANGLE STOP AND WAX RING. NEW WATER CLOSETS(TYPICAL) TO BE RECONNECTED TO EXISTING UNLESS OTHERWISE NOTED.
4. NEW BAR AREA, PROVIDE NEW FIXTURES WITH NEW SANITARY, VENT, HOT AND COLD WATER PIPING SYSTEMS. (CONNECT TO EXISTING SYSTEMS)
5. NEW UNITS BATHROOM, PROVIDE NEW FIXTURES WITH NEW SANITARY, VENT, HOT AND COLD WATER PIPING SYSTEMS. (CONNECT TO EXISTING SYSTEMS)
6. NEW UNITS BATHROOMS AND PROVIDE NEW FIXTURES WITH NEW SANITARY, VENT, HOT AND COLD WATER PIPING SYSTEMS. (CONNECT TO EXISTING SYSTEMS)
7. NEW SEATING AREA AND JUICE BAR, PROVIDE DECK DRAINS AND HOSE BIB IN SEATING AREA AND SANITARY, VENT, HOT AND COLD WATER PIPING SYSTEM IN JUICE BAR AREA.
8. NEW KITCHEN AREA, PROVIDE SANITARY, GREASE, HOT AND COLD WATER PIPING SYSTEM AND 1,250 GALLON GREASE TRAP.
9. 4" SANITARY PIPE FOR NEW BAR. REFER TO SHEET P2.10 FOR CONTINUATION.
10. REFER TO SHEET P2.10 FOR CONTINUATION.
11. NEW GAS PIPE CONNECT TO EXISTING METER.
12. ELEVATOR SUMP PIT W/PUMP.
13. NEW GAS PIPE SLEEVE THROUGH WALL AND TURN UP.
14. 4" GREASE WASTE PIPE FROM NEW KITCHEN.
15. 1,250 GALLON GREASE TRAP.
16. 3" CONDENSATE PIPE @ 1/8" / FT CONNECT TO STORMDRAIN SYSTEM. REFER TO CIVIL DWGS FOR CONTINUATION.
17. 4" SANITARY PIPE @ 1/8" / FT CONNECT TO SANITARY SYSTEM. REFER TO CIVIL DWGS FOR CONTINUATION.
18. 6" STORMDRAIN PIPE @ 1/8" / FT CONNECT TO STORMDRAIN SYSTEM. REFER TO CIVIL DWGS FOR CONTINUATION.
19. NEW GAS PIPE RUNS BELOW GRADE WITH NO JOINT IN SLEEVE.
20. NEW WATER PIPE RUNS BELOW GRADE WITH NO JOINT IN SLEEVE.
21. NEW 2" CONDENSATE RISER.
22. CONNECT NEW 3" SANITARY PIPE TO EXISTING SANITARY SYSTEM.
23. NEW GAS RISER UP FOR TANKLESS GAS WATER HEATERS.
24. NEW GAS AND COLD WATER RISERS.
25. NEW COLD WATER PIPE UP.
26. NEW GAS, HWR HOT, AND COLD WATER PIPES UP.

MTC I LLC
PRIVATE PROVIDER
Construction Plan Review
DATE REVIEWED
BUILDING
STRUCTURAL
M.E.P.
11/18/14

KEY PLAN nts

FEB 05 2014
STEVEN M. FELLER LICENSE No. 22046 STATE OF FLORIDA PROFESSIONAL ENGINEER
APPROVED MIAMI BEACH FIRE DEPARTMENT

STEVEN FELLER P.E. PL
FLORIDA P.E. Reg. # 22046
Certificate of Authorization # 00003427
500 N.E. THIRD AVENUE
FORT LAUDERDALE, FLORIDA 33301
PH: 954.467.1402 FAX: 954.467.5752
e-mail: fellerpe@fellerpe.com
JOB # 13153

HADDON HALL
1500 COLLINS AVE
MIAMI BEACH, FL

KEYPLAN N.T.S.

REVISIONS

NO.	DESCRIPTION	ISSUE DATE

PERMIT SET

NORTH SEAL

Jonathan Cardello
Lic. # AR93391

ADD Inc Architecture Interiors Planning

One Biscayne Tower
Suite 1670
Two South
Biscayne Boulevard
Miami, Fl 33131
T. 305.482.8700
F. 305.482.8770
www.addinc.com
Lic. # AA26001507

Boston Miami

JOB NUMBER:	13036.00
CHECKED BY:	SF
ISSUE DATE:	JANUARY 24, 2014
SCALE:	AS NOTED

SHEET TITLE

ENLARGED UNITS PLUMBING PLAN

SHEET NUMBER

P2.02

COPYRIGHT ADD INC 2011

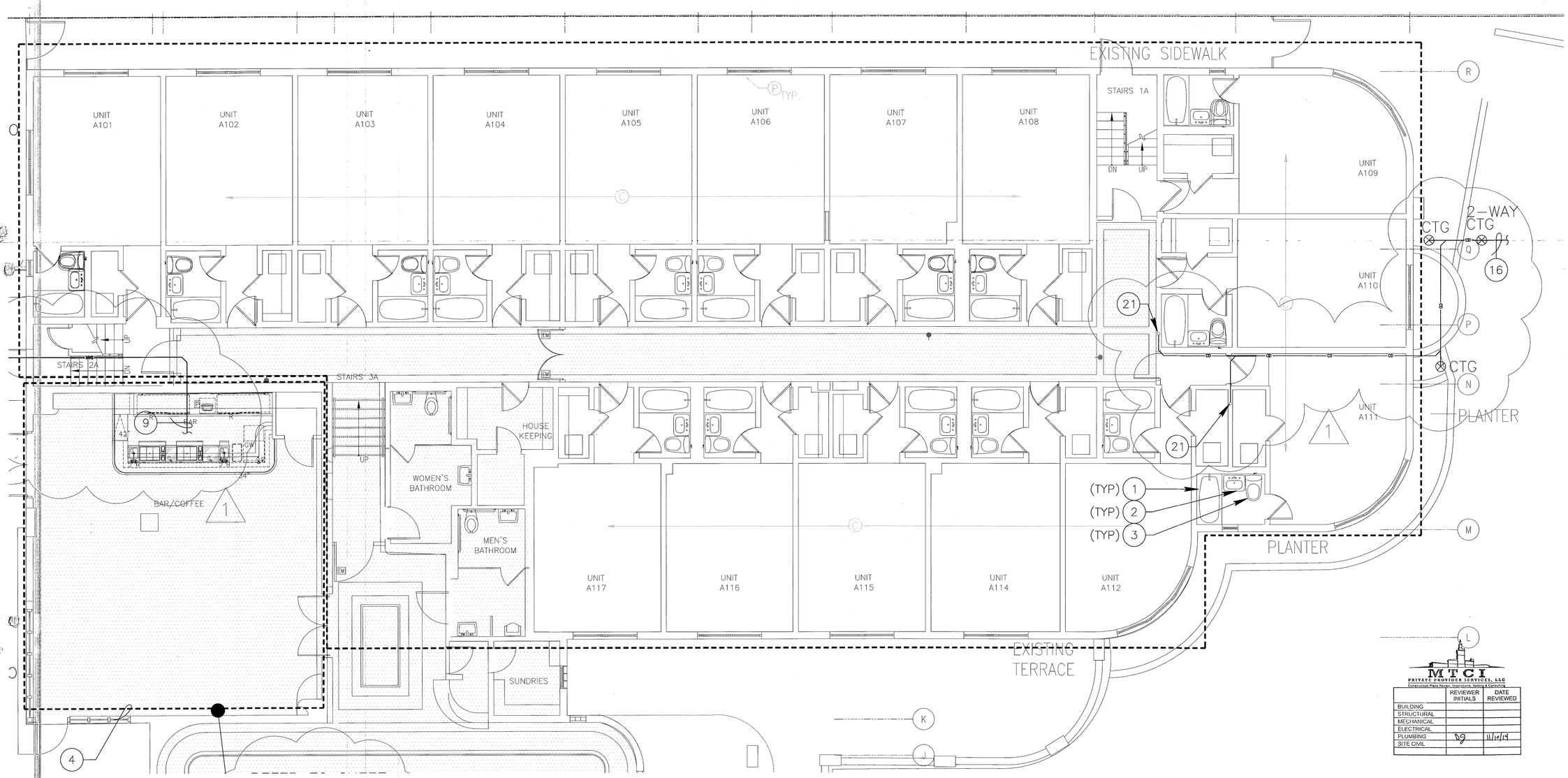

TYPICAL ENLARGED UNITS PLUMBING PLAN

SCALE: 1/4"=1'-0"

KEY NOTES:

1. EXISTING TUB TO BE REFURNISHED, WITH NEW DRAIN, SHOWER VALVES AND HEAD. ALL TUBS(TYPICAL) TO BE RECONNECTED TO EXISTING UNLESS OTHERWISE NOTED.
2. EXISTING LAVATORY TO BE REMOVED AND REPLACED WITH NEW LAVATORY, WITH NEW FAUCET, SUPPLY PIPES, P-TRAP AND ANGLE STOPS. NEW SHOWERS(TYPICAL) TO BE RECONNECTED TO EXISTING UNLESS OTHERWISE NOTED.
3. EXISTING WATER CLOSET TO BE REMOVED AND REPLACED WITH NEW, WITH NEW SUPPLY PIPE, ANGLE STOP AND WAX RING. NEW WATER CLOSETS(TYPICAL) TO BE RECONNECTED TO EXISTING UNLESS OTHERWISE NOTED.
4. NEW BAR AREA, PROVIDE NEW FIXTURES WITH NEW SANITARY, VENT, HOT AND COLD WATER PIPING SYSTEMS. (CONNECT TO EXISTING SYSTEMS)
5. NEW UNITS BATHROOM, PROVIDE NEW FIXTURES WITH NEW SANITARY, VENT, HOT AND COLD WATER PIPING SYSTEMS. (CONNECT TO EXISTING SYSTEMS)
6. NEW UNITS BATHROOMS AND PROVIDE NEW FIXTURES WITH NEW SANITARY, VENT, HOT AND COLD WATER PIPING SYSTEMS. (CONNECT TO EXISTING SYSTEMS)
7. NEW SEATING AREA AND JUICE BAR, PROVIDE DECK DRAINS AND HOSE BIB IN SEATING AREA AND SANITARY, VENT, HOT AND COLD WATER PIPING SYSTEM IN JUICE BAR AREA.
8. NEW KITCHEN AREA, PROVIDE SANITARY, GREASE, HOT AND COLD WATER PIPING SYSTEM AND 1,250 GALLON GREASE TRAP.
9. 4" SANITARY PIPE FOR NEW BAR. REFER TO SHEET P2.10 FOR CONTINUATION.
10. 3" CONDENSATE PIPE @ 1/8" / FT CONNECT TO STORMDRAIN SYSTEM. REFER TO CIVIL DWGS FOR CONTINUATION.
21. 3" CONDENSATE RISER.

KEY PLAN nts

MAY 09 2014

STEVEN M. FELLER LICENSE No. 22046 STATE OF FLORIDA PROFESSIONAL ENGINEER

APPROVED MIAMI BEACH FIRE DEPARTMENT

M T C I
PRIVATE PROVIDER SERVICES, LLC
Construction Plans Review, Inspections, Testing & Consulting

	REVIEWER INITIALS	DATE REVIEWED
BUILDING		
STRUCTURAL		
MECHANICAL		
ELECTRICAL		
PLUMBING	DG	11/10/14
SITE CIVIL		

STEVEN FELLER P.E., P.L.
FLORIDA P.E. Reg. # 22046
Certificate of Authorization # 00003427
500 N.E. THIRD AVENUE
FORT LAUDERDALE, FLORIDA 33301
PH: 954.467.1402 FAX: 954.467.5752
e-mail: fellerpe@fellerpe.com
JOB # 13133

HADDON HALL
1500 COLLINS AVE
MIAMI BEACH, FL

KEYPLAN N.T.S.

REVISIONS

NO.	DESCRIPTION	ISSUE DATE
1	PROGRESS TO 100% CD SET	02/07/2014

100% CONSTRUCTION DOCUMENT SET

NORTH SEAL

Jonathan Cardello
Lic. # AR93391

ADD Inc
Architecture Interiors Planning
One Biscayne Tower
Suite 1670
Two South
Biscayne Boulevard
Miami, Fl 33131
T. 305.482.8700
F. 305.482.8770
www.addinc.com
Lic. # AA26001507
Boston Miami

JOB NUMBER: 13036.00
CHECKED BY:
ISSUE DATE: MARCH 14, 2014
SCALE: AS NOTED

SHEET TITLE

ENLARGED UNITS PLUMBING PLAN

SHEET NUMBER

P2.03

COPYRIGHT ADD INC 2011

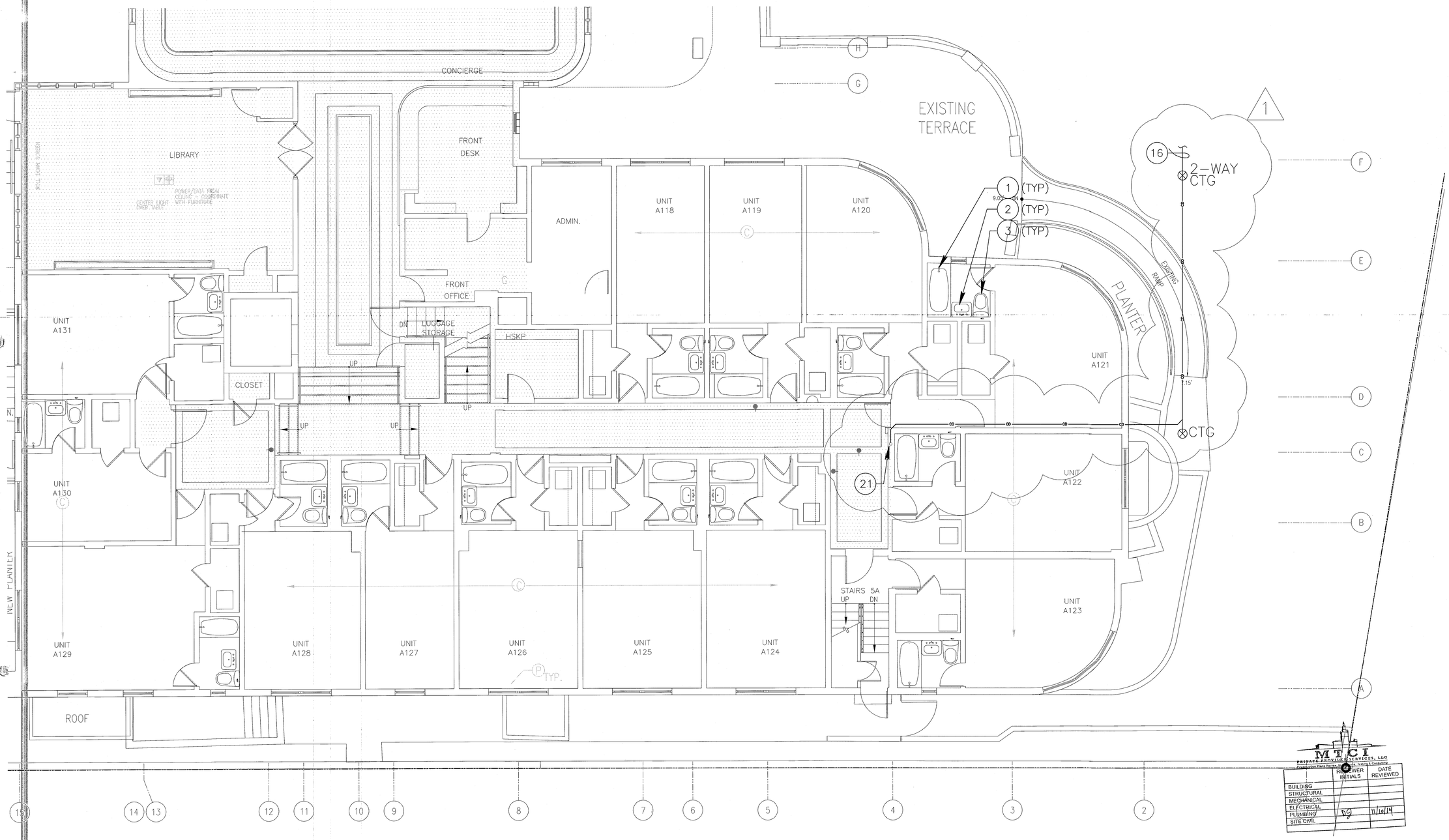

	INITIALS	DATE REVIEWED
BUILDING		
STRUCTURAL		
MECHANICAL		
ELECTRICAL		
PLUMBING	DS	11/10/14
SITE CIVIL		

KEY NOTES:

1. EXISTING TUB TO BE REFURNISHED, WITH NEW DRAIN, SHOWER VALVES AND HEAD. ALL TUBS(TYPICAL) TO BE RECONNECTED TO EXISTING UNLESS OTHERWISE NOTED.
2. EXISTING LAVATORY TO BE REMOVED AND REPLACED WITH NEW LAVATORY, WITH NEW FAUCET, SUPPLY PIPES, P-TRAP AND ANGLE STOPS. NEW SHOWERS(TYPICAL) TO BE RECONNECTED TO EXISTING UNLESS OTHERWISE NOTED.
3. EXISTING WATER CLOSET TO BE REMOVED AND REPLACED WITH NEW, WITH NEW SUPPLY PIPE, ANGLE STOP AND WAX RING. NEW WATER CLOSETS(TYPICAL) TO BE RECONNECTED TO EXISTING UNLESS OTHERWISE NOTED.
10. 3" STORMDRAIN PIPE @ 1/8" / FT CONNECT TO STORMDRAIN SYSTEM. REFER TO CIVIL DWGS FOR CONTINUATION.
21. 2" CONDENSATE RISER.

TYPICAL ENLARGED UNITS PLUMBING PLAN

SCALE: 1/4"=1'-0"

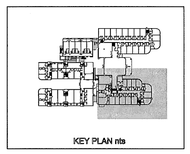

KEY PLAN nts

MAY 09 2014

STEVEN M. FELLER LICENSE No. 22046 STATE OF FLORIDA PROFESSIONAL ENGINEER

APPROVED MIAMI BEACH FIRE DEPARTMENT

STEVEN FELLER P.E.,PL
FLORIDA P.E. Reg. # 22046
Certificate of Authorization # 00003427
500 N.E. THIRD AVENUE
FORT LAUDERDALE, FLORIDA 33301
PH: 954.467.1402 FAX: 954.467.5752
e-mail: fellerpe@fellerpe.com
JOB # 13153

HADDON HALL
1500 COLLINS AVE
MIAMI BEACH, FL

KEYPLAN N.T.S.

REVISIONS

NO.	DESCRIPTION	ISSUE DATE
1	PROGRESS TO 100% CD SET	02/07/2014

100% CONSTRUCTION DOCUMENT SET

NORTH SEAL

Jonathan Cardello
Lic. # AR93391

ADD Inc Architecture Interiors Planning

One Biscayne Tower
Suite 1670
Two South
Biscayne Boulevard
Miami, Fl 33131
T. 305.482.8700
F. 305.482.8770
www.addinc.com
Lic. # AA26001507

Boston Miami

JOB NUMBER: 13036.00
CHECKED BY:
ISSUE DATE: MARCH 14, 2014
SCALE: AS NOTED

SHEET TITLE

ENLARGED UNITS PLUMBING PLAN

SHEET NUMBER

P2.04

COPYRIGHT ADD INC 2011

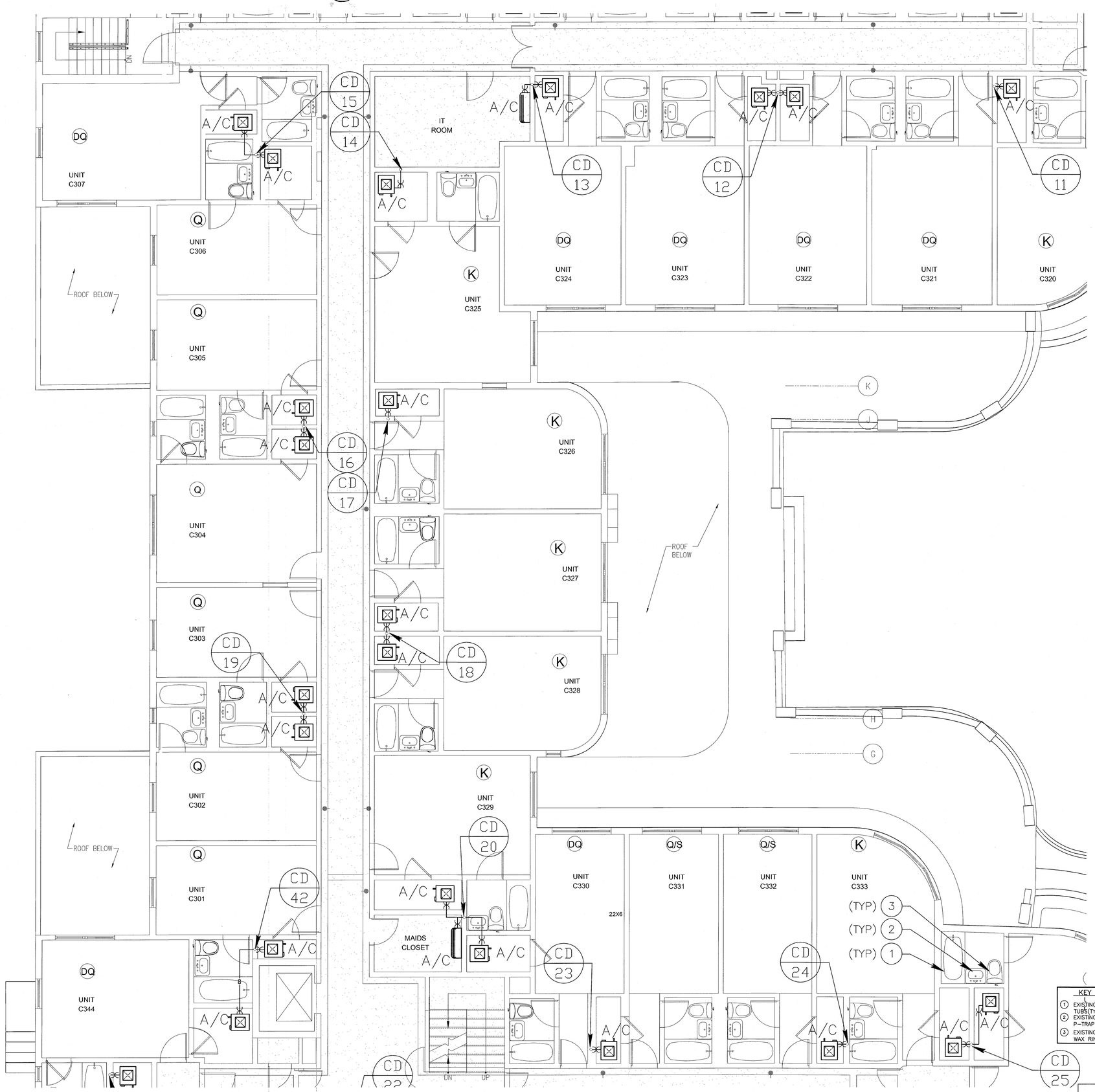

ENLARGED UNITS @ SECOND & THIRD FLOOR PLUMBING PLAN

SCALE: 1/4"=1'-0"

KEY NOTES:

1. EXISTING TUB TO BE REFURNISHED, WITH NEW DRAIN, SHOWER VALVES AND HEAD. ALL TUBS(TYPICAL) TO BE RECONNECTED TO EXISTING UNLESS OTHERWISE NOTED.
2. EXISTING LAVATORY TO BE REMOVED AND REPLACED WITH NEW LAVATORY, WITH NEW FAUCET, SUPPLY PIPES, P-TRAP AND ANGLE STOPS. NEW SHOWERS(TYPICAL) TO BE RECONNECTED TO EXISTING UNLESS OTHERWISE NOTED.
3. EXISTING WATER CLOSET TO BE REMOVED AND REPLACED WITH NEW, WITH NEW SUPPLY PIPE, ANGLE STOP AND WAX RING. NEW WATER CLOSETS(TYPICAL) TO BE RECONNECTED TO EXISTING UNLESS OTHERWISE NOTED.

KEY PLAN nts

STEVEN FELLER P.E., P.L.
FLORIDA P.E. Reg. # 22046
Certificate of Authorization # 00003427
500 N.E. THIRD AVENUE
FORT LAUDERDALE, FLORIDA 33301
PH: 954.467.1402 FAX: 954.467.5752
e-mail: felleype@felleype.com
JOB # 13153

STEVEN M. FELLER LICENSE No 22046 STATE OF FLORIDA PROFESSIONAL ENGINEER

FEB 05 2014

APPROVED MIAMI BEACH FIRE DEPARTMENT

HADDON HALL
1500 COLLINS AVE

MIAMI BEACH, FL

KEYPLAN N.T.S.

REVISIONS

NO.	DESCRIPTION	ISSUE DATE

MTCI PRIVATE PROVIDER SERVICES, LLC
Construction Plans Review, Inspections, Testing & Consulting

	REVIEWER INITIALS	DATE REVIEWED
BUILDING		
STRUCTURAL		
MECHANICAL		
ELECTRICAL		
PLUMBING	DG	11/19/14
SITE CIVIL		

PERMIT SET

NORTH SEAL

Jonathan Cardello
Lic. # AR93391

ADD Inc Architecture Interiors Planning

One Biscayne Tower
Suite 1670
Two South
Biscayne Boulevard
Miami, Fl 33131
T. 305.482.8700
F. 305.482.8770
www.addinc.com
Lic. # AA26001507

Boston Miami

JOB NUMBER:	13036.00
CHECKED BY:	SF
ISSUE DATE:	JANUARY 24, 2014
SCALE:	AS NOTED

SHEET TITLE

ENLARGED UNITS
THIRD FLOOR
PLUMBING PLAN

SHEET NUMBER

P2.05

COPYRIGHT ADD INC 2011

KEY NOTES:

1. EXISTING TUB TO BE REFURNISHED, WITH NEW DRAIN, SHOWER VALVES AND HEAD. TYPICAL UNLESS OTHERWISE NOTED.
2. EXISTING LAVATORY TO BE REMOVED AND REPLACED WITH NEW LAVATORY, WITH NEW FAUCET, SUPPLY PIPES, P-TRAP AND ANGLE STOPS. TYPICAL UNLESS OTHERWISE NOTED.
3. EXISTING WATER CLOSET TO BE REMOVED AND REPLACED WITH NEW, WITH NEW SUPPLY PIPE, ANGLE STOP AND WAX RING. TYPICAL UNLESS OTHERWISE NOTED.
4. NEW BAR AND BATHROOMS, PROVIDE NEW FIXTURES WITH NEW SANITARY, VENT, HOT AND COLD WATER PIPING SYSTEMS.
5. NEW UNITS BATHROOM, PROVIDE NEW FIXTURES WITH NEW SANITARY, VENT, HOT AND COLD WATER PIPING SYSTEMS. (CONNECT TO EXISTING SYSTEMS)
6. NEW NORITZ TANKLESS GAS WATER HEATER MODEL # NRC 711, 160,000 BTU, EFFICIENCY 0.94. (2)

PROPERTY LINE

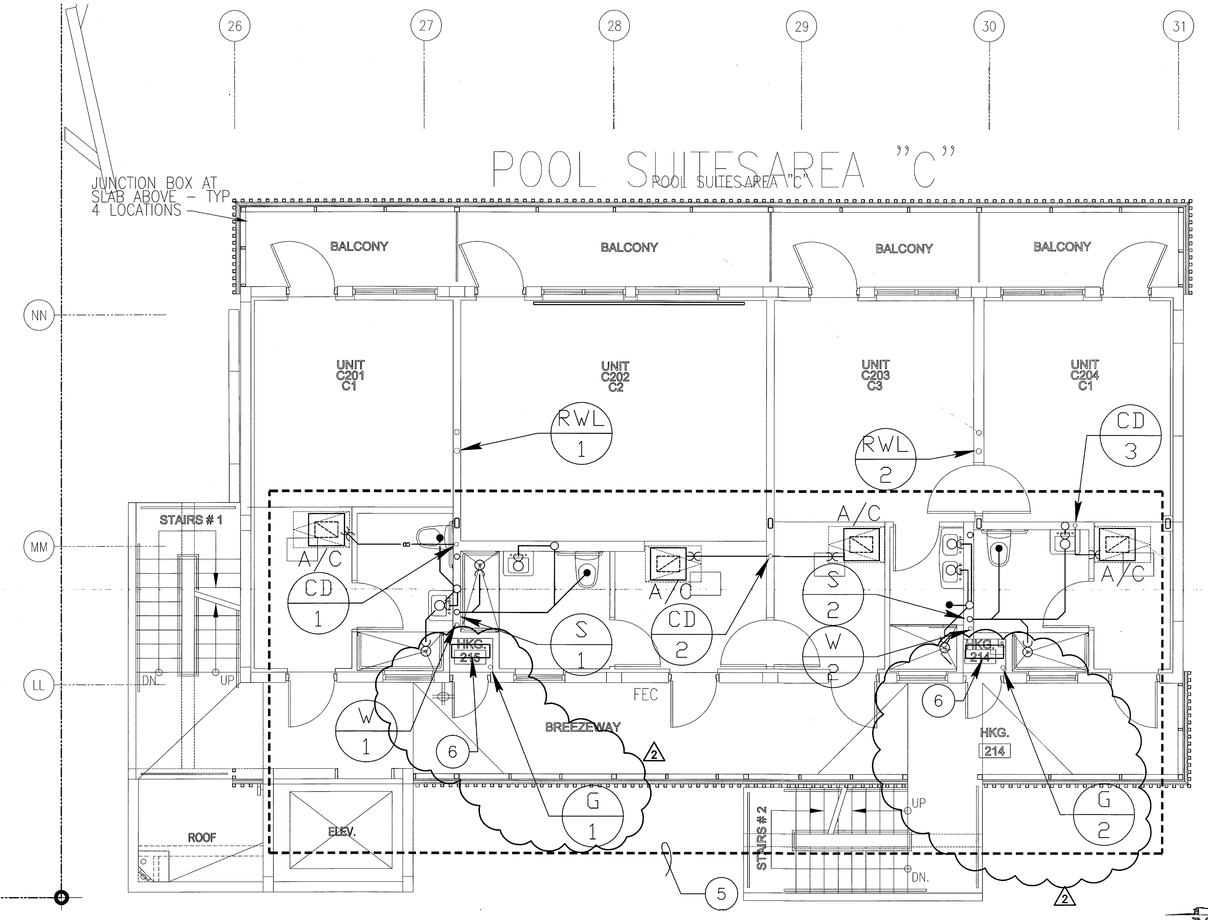

2ND & 3RD FLOOR ENLARGED UNITS PLUMBING PLAN

SCALE: 1/4"=1'-0"

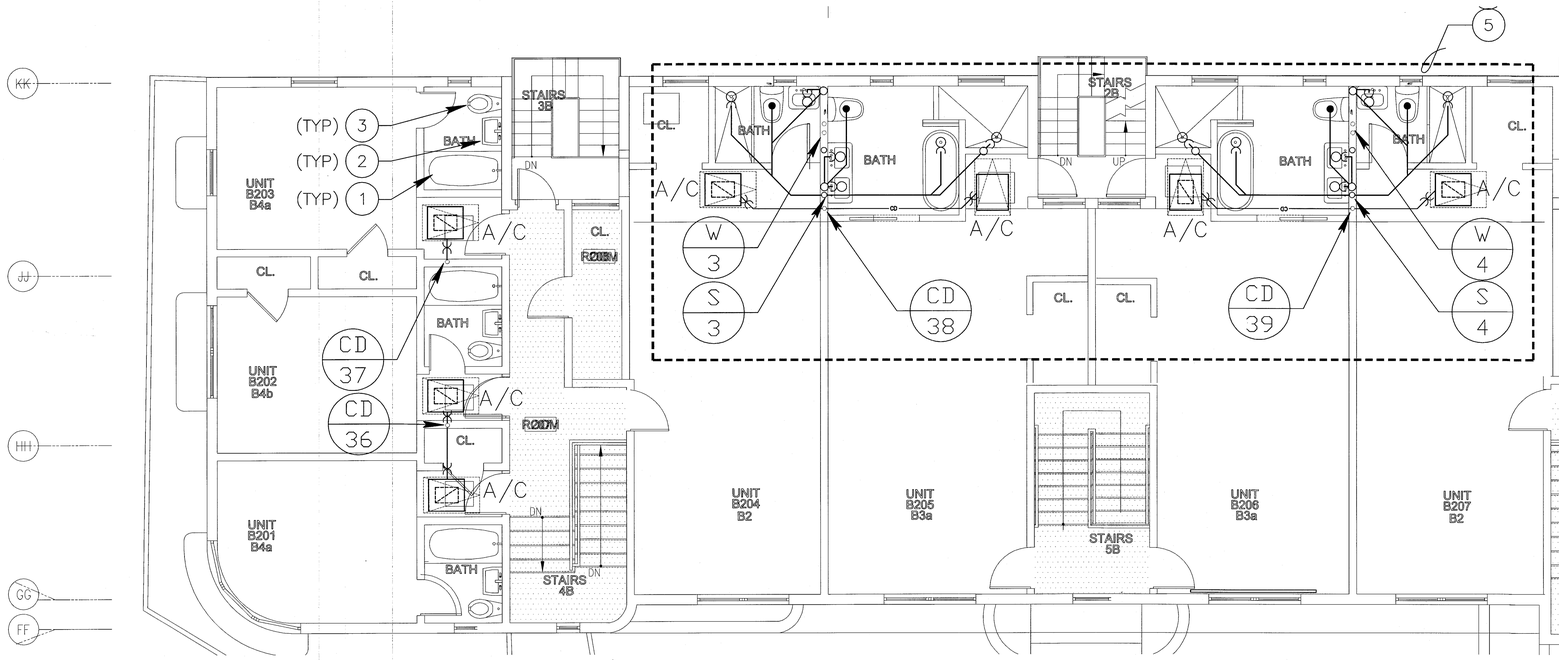

2ND FLOOR ENLARGED UNITS PLUMBING PLAN

SCALE: 1/4"=1'-0"

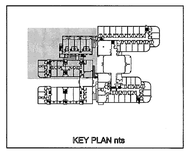

KEY PLAN nts

MAY 09 2014

STEVEN M. FELLER LICENSE No 22046 STATE OF FLORIDA PROFESSIONAL ENGINEER

APPROVED MIAMI BEACH FIRE DEPARTMENT

STEVEN FELLER P.E., LLC
FLORIDA P.E. Reg. # 22046
Certificate of Authorization # 00003427
500 N.E. THIRD AVENUE
FORT LAUDERDALE, FLORIDA 33301
PH: 954.467.1402 FAX: 954.467.5752
e-mail: fellerpe@fellerpe.com
JOB # 13153

MTCI
PRIVATE PROVIDER SERVICES, LLC
Construction Plans Review, Inspections, Testing & Consulting

	REVIEWER INITIALS	DATE REVIEWED
BUILDING		
STRUCTURAL		
MECHANICAL		
ELECTRICAL		
PLUMBING	DG	11/6/14
SITE CIVIL		

HADDON HALL
1500 COLLINS AVE
MIAMI BEACH, FL

KEYPLAN N.T.S.

REVISIONS

NO.	DESCRIPTION	ISSUE DATE
2	PERMIT REVIEW COMMENTS	3-14-14

100% CONSTRUCTION DOCUMENT SET

NORTH SEAL

Jonathan Cardello
Lic. # AR93391

ADD Inc Architecture Interiors Planning

One Biscayne Tower
Suite 1670
Two South
Biscayne Boulevard
Miami, Fl 33131
T. 305.482.8700
F. 305.482.8770
www.addinc.com
Lic. # AA26001507

Boston Miami

JOB NUMBER: 13036.00
CHECKED BY:
ISSUE DATE: MARCH 14, 2014
SCALE: AS NOTED

SHEET TITLE

ENLARGED UNITS PLUMBING PLAN

SHEET NUMBER

P2.06

COPYRIGHT ADD INC 2011

File: K:\Projects\13153 FE\08 PLOT\P2.06 Enlarged 2nd Flr Units.dwg | Layout: 206
User: Adam | Date: Tuesday, May 6, 2014 01:34:24 PM

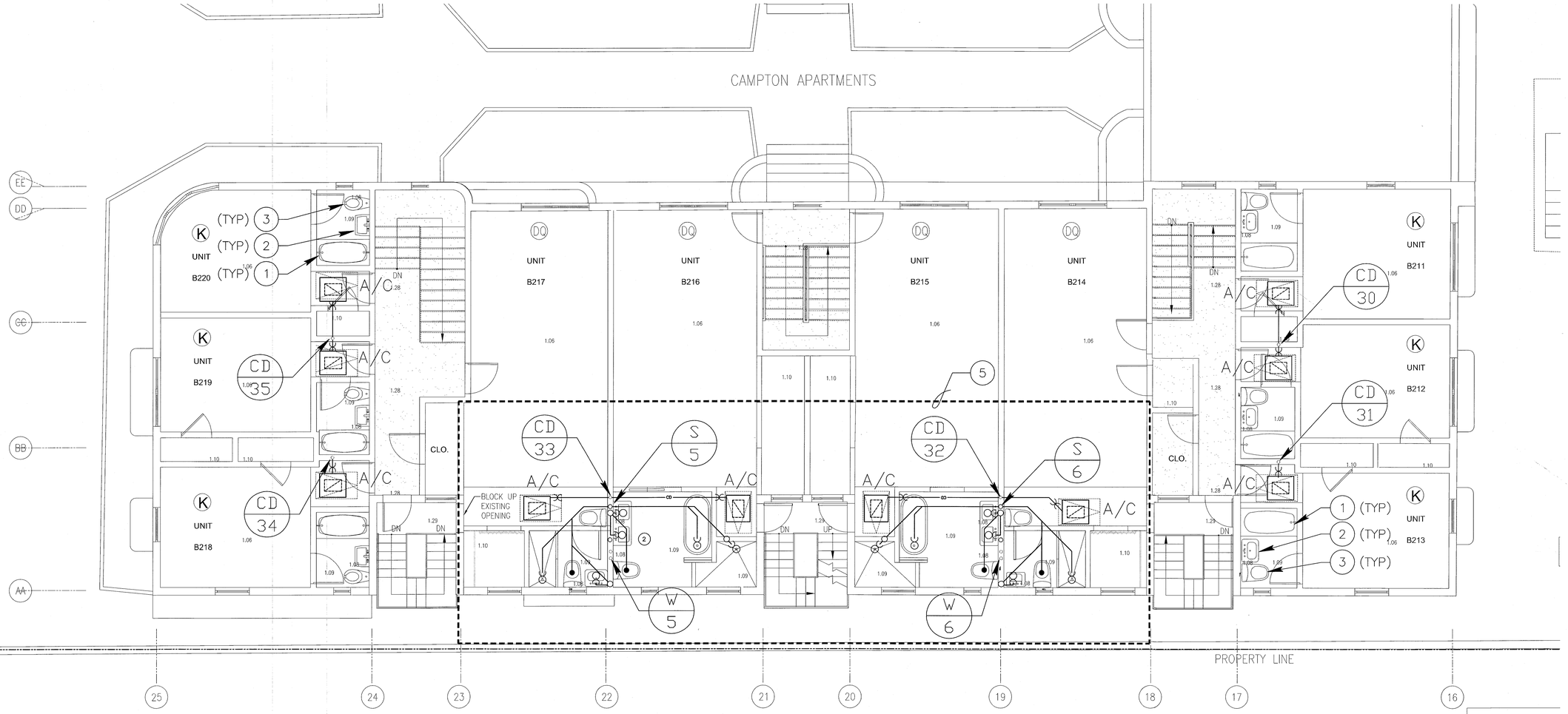

KEY NOTES:

1. EXISTING TUB TO BE REFURNISHED, WITH NEW DRAIN, SHOWER VALVES AND HEAD. TYPICAL UNLESS OTHERWISE NOTED.
2. EXISTING LAVATORY TO BE REMOVED AND REPLACED WITH NEW LAVATORY, WITH NEW FAUCET, SUPPLY PIPES, P-TRAP AND ANGLE STOPS. TYPICAL UNLESS OTHERWISE NOTED.
3. EXISTING WATER CLOSET TO BE REMOVED AND REPLACED WITH NEW, WITH NEW SUPPLY PIPE, ANGLE STOP AND WAX RING. TYPICAL UNLESS OTHERWISE NOTED.
4. NEW BAR AND BATHROOMS, PROVIDE NEW FIXTURES WITH NEW SANITARY, VENT, HOT AND COLD WATER PIPING SYSTEMS.
5. NEW UNITS BATHROOM, PROVIDE NEW FIXTURES WITH NEW SANITARY, VENT, HOT AND COLD WATER PIPING SYSTEMS. (CONNECT TO EXISTING SYSTEMS)
6. NEW TANKLESS GAS WATER HEATER.

2ND FLOOR ENLARGED UNITS PLUMBING PLAN

SCALE: 1/4"=1'-0"

MTCI
PRIVATE PROVIDER SERVICES, LLC
Construction Plans Review, Inspection, Testing & Consulting

	REVIEWER INITIALS	DATE REVIEWED
BUILDING		
STRUCTURAL		
MECHANICAL		
ELECTRICAL		
PLUMBING	DJ	11/10/14
SITE CIVIL		

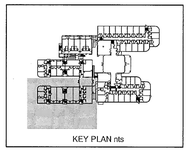
KEY PLAN nts

STEVEN M. FELLER LICENSE No. 22046 STATE OF FLORIDA PROFESSIONAL ENGINEER

FEB 05 2014

APPROVED MIAMI BEACH FIRE DEPARTMENT

STEVEN FELLER P.E., P.L.L.C.
FLORIDA P.E. Reg. # 22046
Certificate of Authorization # 00003427
300 N.E. THIRD AVENUE
FORT LAUDERDALE, FLORIDA 33301
PH: 954.467.1402 FAX: 954.467.5752
e-mail: fellerpe@fellerpe.com
JOB # 13133

HADDON HALL
1500 COLLINS AVE

MIAMI BEACH, FL

KEYPLAN N.T.S.

REVISIONS

NO.	DESCRIPTION	ISSUE DATE

PERMIT SET

NORTH SEAL

Jonathan Cardello
Lic. # AR93391

ADD Inc Architecture Interiors Planning

One Biscayne Tower
Suite 1670
Two South
Biscayne Boulevard
Miami, Fl 33131
T. 305.482.8700
F. 305.482.8770
www.addinc.com
Lic. # AA26001507

Boston Miami

JOB NUMBER:	13036.00
CHECKED BY:	SF
ISSUE DATE:	JANUARY 24, 2014
SCALE:	AS NOTED

SHEET TITLE

ENLARGED UNITS PLUMBING PLAN

SHEET NUMBER

P2.07

COPYRIGHT ADD INC 2011

2ND & 3RD FLOOR ENLARGED UNITS PLUMBING PLAN

SCALE: 1/4"=1'-0"

KEY NOTES:

1. EXISTING TUB TO BE REFURNISHED, WITH NEW DRAIN, SHOWER VALVES AND HEAD. ALL TUBS(TYPICAL) TO BE RECONNECTED TO EXISTING UNLESS OTHERWISE NOTED.
2. EXISTING LAVATORY TO BE REMOVED AND REPLACED WITH NEW LAVATORY, WITH NEW FAUCET, SUPPLY PIPES, P-TRAP AND ANGLE STOPS. NEW SHOWERS(TYPICAL) TO BE RECONNECTED TO EXISTING UNLESS OTHERWISE NOTED.
3. EXISTING WATER CLOSET TO BE REMOVED AND REPLACED WITH NEW, WITH NEW SUPPLY PIPE, ANGLE STOP AND WAX RING. NEW WATER CLOSETS(TYPICAL) TO BE RECONNECTED TO EXISTING UNLESS OTHERWISE NOTED.
27. 3" STORMDRAIN PIPE @ 1/8" / FT CONNECT TO STORMDRAIN SYSTEM. REFER TO CIVIL DWGS FOR CONTINUATION.

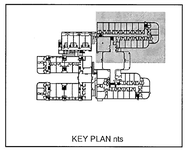

KEY PLAN nts

FEB 05 2014

STEVEN FELLER P.E., PL
FLORIDA P.E. Reg. # 22046
Certificate of Authorization # 00003427
500 N.E. THIRD AVENUE
FORT LAUDERDALE, FLORIDA 33301
PH: 954.467.1402 FAX: 954.467.5792
e-mail: fellerpe@fellerpe.com
JOB # 13153

STEVEN M. FELLER LICENSE No. 22046 STATE OF FLORIDA PROFESSIONAL ENGINEER

APPROVED MIAMI BEACH FIRE DEPARTMENT

HADDON HALL
1500 COLLINS AVE

MIAMI BEACH, FL

KEYPLAN N.T.S.

REVISIONS

NO.	DESCRIPTION	ISSUE DATE

	REVIEWER INITIALS	DATE REVIEWED
BUILDING		
STRUCTURAL		
MECHANICAL		
ELECTRICAL		
PLUMBING	DJ	1/16/14
SITE CIVIL		

PERMIT SET

NORTH SEAL

Jonathan Cardello
Lic. # AR93391

ADD Inc Architecture Interiors Planning

One Biscayne Tower
Suite 1670
Two South
Biscayne Boulevard
Miami, Fl 33131
T. 305.482.8700
F. 305.482.8770
www.addinc.com
Lic. # AA26001507

Boston Miami

JOB NUMBER:	13036.00
CHECKED BY:	SF
ISSUE DATE:	JANUARY 24, 2014
SCALE:	AS NOTED

SHEET TITLE

ENLARGED UNITS PLUMBING PLAN

SHEET NUMBER

P2.08

COPYRIGHT ADD INC 2011

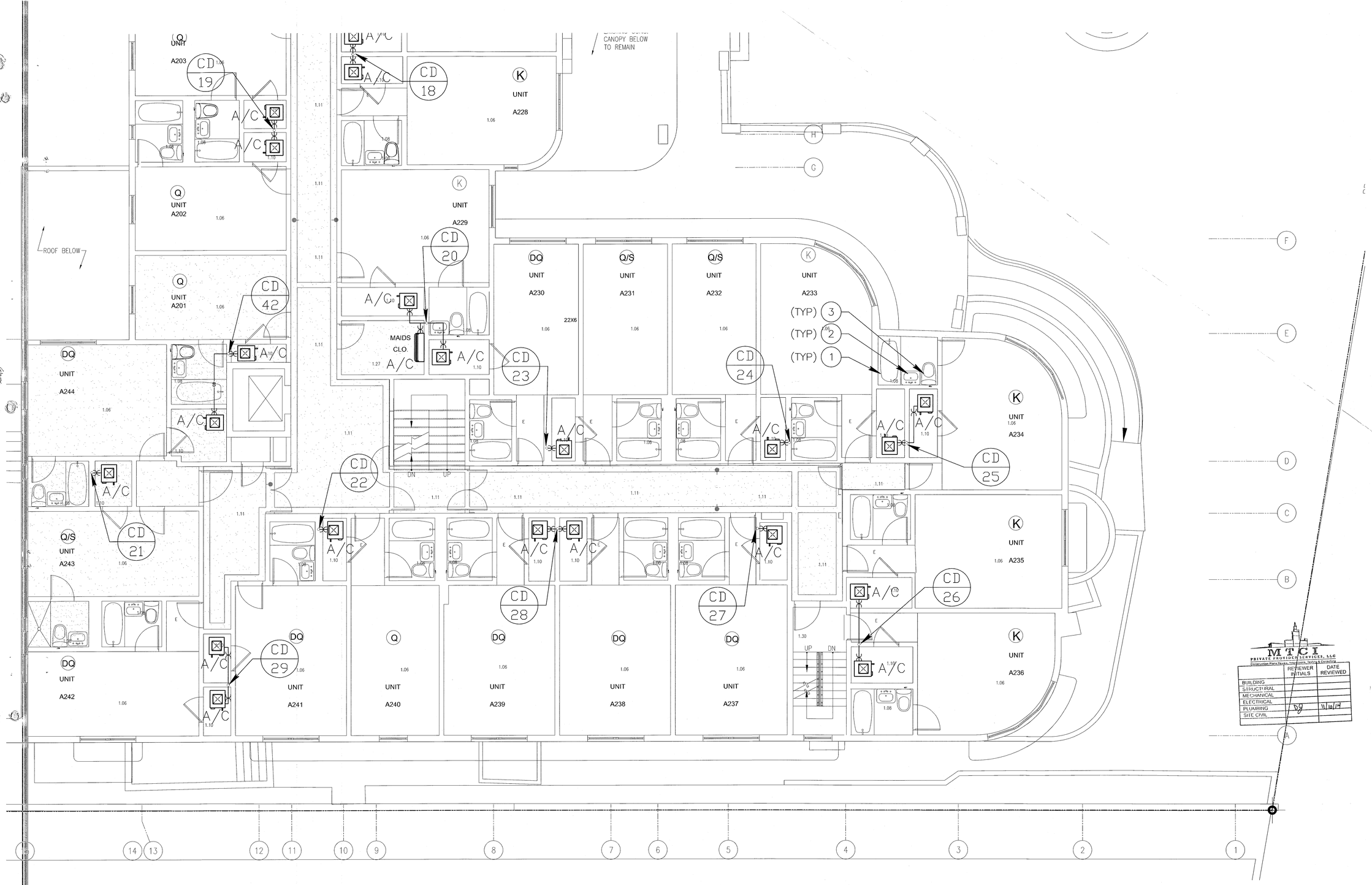

KEY NOTES:

1. EXISTING TUB TO BE REFURNISHED, WITH NEW DRAIN, SHOWER VALVES AND HEAD. ALL TUBS(TYPICAL) TO BE RECONNECTED TO EXISTING UNLESS OTHERWISE NOTED.
2. EXISTING LAVATORY TO BE REMOVED AND REPLACED WITH NEW LAVATORY, WITH NEW FAUCET, SUPPLY PIPES, P-TRAP AND ANGLE STOPS. NEW SHOWERS(TYPICAL) TO BE RECONNECTED TO EXISTING UNLESS OTHERWISE NOTED.
3. EXISTING WATER CLOSET TO BE REMOVED AND REPLACED WITH NEW, WITH NEW SUPPLY PIPE, ANGLE STOP AND WAX RING. NEW WATER CLOSETS(TYPICAL) TO BE RECONNECTED TO EXISTING UNLESS OTHERWISE NOTED.
27. 3" STORMDRAIN PIPE @ 1/8" / FT CONNECT TO STORMDRAIN SYSTEM. REFER TO CIVIL DWGS FOR CONTINUATION.

2ND & 3RD FLOOR ENLARGED UNITS PLUMBING PLAN

SCALE: 1/4"=1'-0"

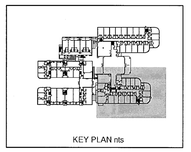

KEY PLAN nts

STEVEN FELLER P.E./PL
FLORIDA P.E. Reg. # 22046
Certificate of Authorization # 00003427
500 N.E. THIRD AVENUE
FORT LAUDERDALE, FLORIDA 33301
PH: 954.467.1402 FAX: 954.467.5752
e-mail: fellerpe@fellerpe.com
JOB # 13153

STEVEN M. FELLER LICENSE NO. 22046 STATE OF FLORIDA PROFESSIONAL ENGINEER
FEB 05 2014
APPROVED MIAMI BEACH FIRE DEPARTMENT

MTCI
PRIVATE PROVIDER SERVICES, LLC
Construction Plans Review, Inspections, Training & Consulting

	REVIEWER INITIALS	DATE REVIEWED
BUILDING		
STRUCTURAL		
MECHANICAL		
ELECTRICAL		
PLUMBING	DG	11/10/14
SITE CIVIL		

HADDON HALL
1500 COLLINS AVE
MIAMI BEACH, FL

KEYPLAN N.T.S.

REVISIONS

NO.	DESCRIPTION	ISSUE DATE

PERMIT SET

NORTH SEAL

Jonathan Cardello
Lic. # AR93391

ADD Inc Architecture Interiors Planning

One Biscayne Tower
Suite 1670
Two South
Biscayne Boulevard
Miami, Fl 33131
T. 305.482.8700
F. 305.482.8770
www.addinc.com
Lic. # AA26001507

Boston Miami

JOB NUMBER: 13036.00
CHECKED BY: SF
ISSUE DATE: JANUARY 24, 2014
SCALE: AS NOTED

SHEET TITLE

ENLARGED UNITS PLUMBING PLAN

SHEET NUMBER

P2.09

COPYRIGHT ADD INC 2011

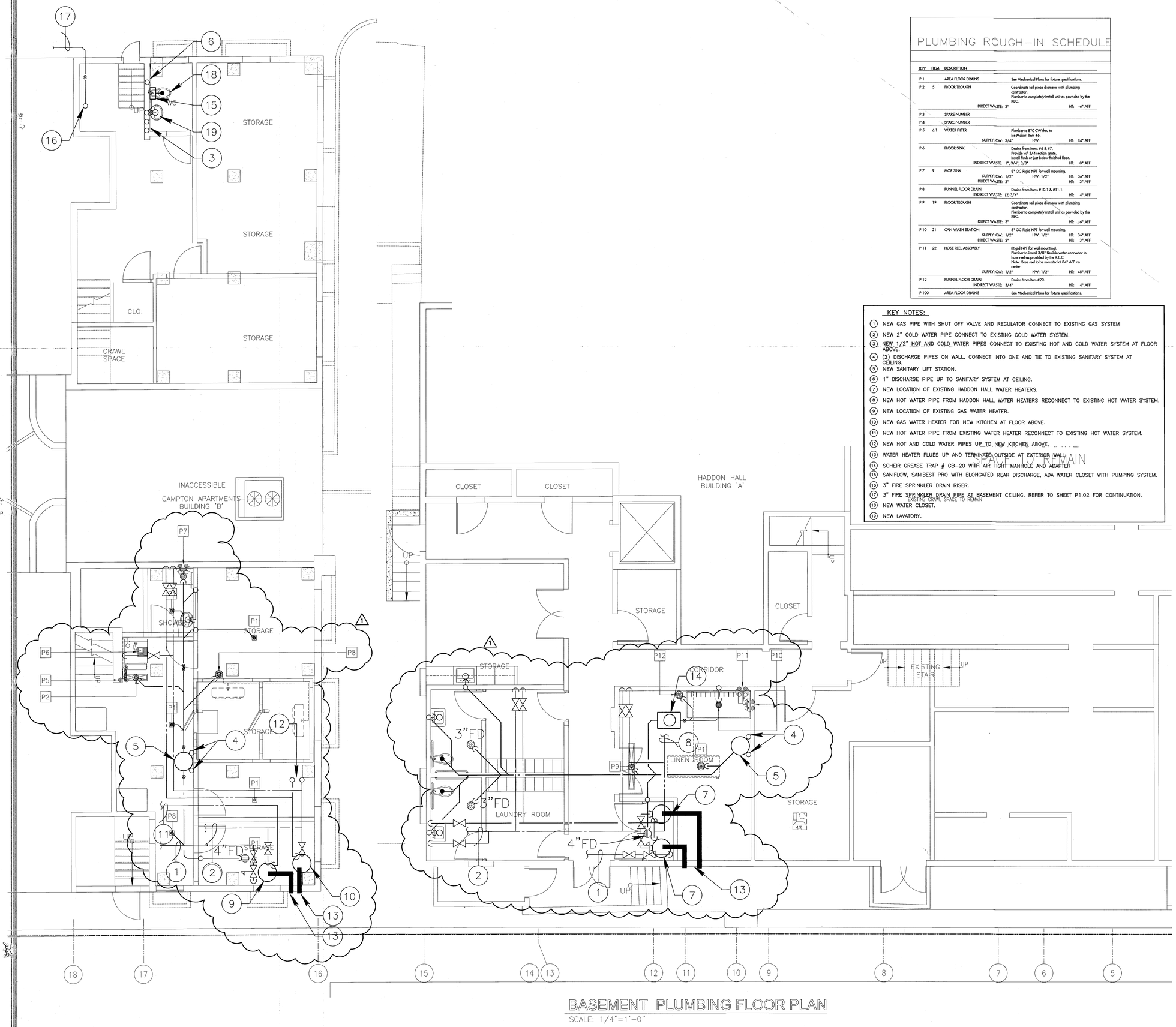

BASEMENT PLUMBING FLOOR PLAN

SCALE: 1/4"=1'-0"

PLUMBING ROUGH-IN SCHEDULE

KEY	ITEM	DESCRIPTION		
P 1		AREA FLOOR DRAINS	See Mechanical Plans for fixture specifications.	
P 2	5	FLOOR TROUGH	Coordinate tail piece diameter with plumbing contractor. Plumber to completely install unit as provided by the KEC.	
		DIRECT WASTE: 3"		HT: -6" AFF
P 3		SPARE NUMBER		
P 4		SPARE NUMBER		
P 5	6.1	WATER FILTER	Plumber to BTC CW thru to Ice Maker, Item #6.	
		SUPPLY: CW: 3/4"	HW:	HT: 84" AFF
P 6		FLOOR SINK	Drains from Items #6 & #7. Provide w/ 3/4 section grate. Install flush or just below finished floor.	
		INDIRECT WASTE: 1", 3/4", 3/8"		HT: 0" AFF
P 7	9	MOP SINK	8" OC Rigid NPT for wall mounting.	
		SUPPLY: CW: 1/2"	HW: 1/2"	HT: 36" AFF
		DIRECT WASTE: 2"		HT: 3" AFF
P 8		FUNNEL FLOOR DRAIN	Drains from Items #10.1 & #11.1.	
		INDIRECT WASTE: (2) 3/4"		HT: 4" AFF
P 9	19	FLOOR TROUGH	Coordinate tail piece diameter with plumbing contractor. Plumber to completely install unit as provided by the KEC.	
		DIRECT WASTE: 3"		HT: -6" AFF
P 10	21	CAN WASH STATION	8" OC Rigid NPT for wall mounting.	
		SUPPLY: CW: 1/2"	HW: 1/2"	HT: 36" AFF
		DIRECT WASTE: 2"		HT: 3" AFF
P 11	22	HOSE REEL ASSEMBLY	(Rigid NPT for wall mounting). Plumber to install 3/8" flexible water connector to hose reel as provided by the K.E.C. Note: Hose reel to be mounted at 84" AFF on center.	
		SUPPLY: CW: 1/2"	HW: 1/2"	HT: 48" AFF
P 12		FUNNEL FLOOR DRAIN	Drains from Item #20.	
		INDIRECT WASTE: 3/4"		HT: 4" AFF
P 100		AREA FLOOR DRAINS	See Mechanical Plans for fixture specifications.	

KEY NOTES:

1. NEW GAS PIPE WITH SHUT OFF VALVE AND REGULATOR CONNECT TO EXISTING GAS SYSTEM
2. NEW 2" COLD WATER PIPE CONNECT TO EXISTING COLD WATER SYSTEM.
3. NEW 1/2" HOT AND COLD WATER PIPES CONNECT TO EXISTING HOT AND COLD WATER SYSTEM AT FLOOR ABOVE.
4. (2) DISCHARGE PIPES ON WALL, CONNECT INTO ONE AND TIE TO EXISTING SANITARY SYSTEM AT CEILING.
5. NEW SANITARY LIFT STATION.
6. 1" DISCHARGE PIPE UP TO SANITARY SYSTEM AT CEILING.
7. NEW LOCATION OF EXISTING HADDON HALL WATER HEATERS.
8. NEW HOT WATER PIPE FROM HADDON HALL WATER HEATERS RECONNECT TO EXISTING HOT WATER SYSTEM.
9. NEW LOCATION OF EXISTING GAS WATER HEATER.
10. NEW GAS WATER HEATER FOR NEW KITCHEN AT FLOOR ABOVE.
11. NEW HOT WATER PIPE FROM EXISTING WATER HEATER RECONNECT TO EXISTING HOT WATER SYSTEM.
12. NEW HOT AND COLD WATER PIPES UP TO NEW KITCHEN ABOVE.
13. WATER HEATER FLUES UP AND TERMINATE OUTSIDE AT EXTERIOR WALL.
14. SCHEIR GREASE TRAP # GB-20 WITH AIR TIGHT MANHOLE AND ADAPTER
15. SANIFLOW, SANIBEST PRO WITH ELONGATED REAR DISCHARGE, ADA WATER CLOSET WITH PUMPING SYSTEM.
16. 3" FIRE SPRINKLER DRAIN RISER.
17. 3" FIRE SPRINKLER DRAIN PIPE AT BASEMENT CEILING. REFER TO SHEET P1.02 FOR CONTINUATION.
18. NEW WATER CLOSET.
19. NEW LAVATORY.

PLACE TO REMAIN

HADDON HALL
1500 COLLINS AVE
MIAMI BEACH, FL

KEYPLAN N.T.S.

REVISIONS

NO.	DESCRIPTION	ISSUE DATE
1	PROGRESS TO 100% CD SET	02/07/2014

MAY 09 2014

APPROVED MIAMI BEACH FIRE DEPARTMENT

STEVEN M. FELLER LICENSE No. 22046 STATE OF FLORIDA PROFESSIONAL ENGINEER

STEVEN FELLER P.E., PL
FLORIDA P.E. Reg. # 22046
Certificate of Authorization # 00003427
500 N.E. THIRD AVENUE
FORT LAUDERDALE, FLORIDA 33301
PH: 954.467.1402 FAX: 954.467.5752
e-mail: fellerpe@fellerpe.com
JOB # 13153

MITCI PRIVATE PROVIDER SERVICES, LLC
Comprehensive Plans Review, Inspections & Consulting

	REVIEWER INITIALS	DATE REVIEWED
BUILDING		
STRUCTURAL		
MECHANICAL		
ELECTRICAL		
PLUMBING	DG	11/10/14
SITE CIVIL		

100% CONSTRUCTION DOCUMENT SET

NORTH SEAL

Jonathan Cardello
Lic. # AR93391

ADD Inc Architecture Interiors Planning

One Biscayne Tower
Suite 1670
Two South
Biscayne Boulevard
Miami, Fl 33131
T. 305.482.8700
F. 305.482.8770
www.addinc.com
Lic. # AA26001507

Boston Miami

JOB NUMBER: 13036.00
CHECKED BY:
ISSUE DATE: MARCH 14, 2014
SCALE: AS NOTED

SHEET TITLE

ENLARGED BASEMENT PLUMBING PLAN

SHEET NUMBER

P2.10

COPYRIGHT ADD INC 2011

PLUMBING ROUGH-IN SCHEDULE

HADDON - PLUMB-1.tif	HADDON - PLUMB-1.tif HADDON - PLUMB-3.tif	HADDON - PLUMB-1.tif HADDON - PLUMB-5.tif
HADDON - PLUMB-2.tif	HADDON - PLUMB-4.tif	

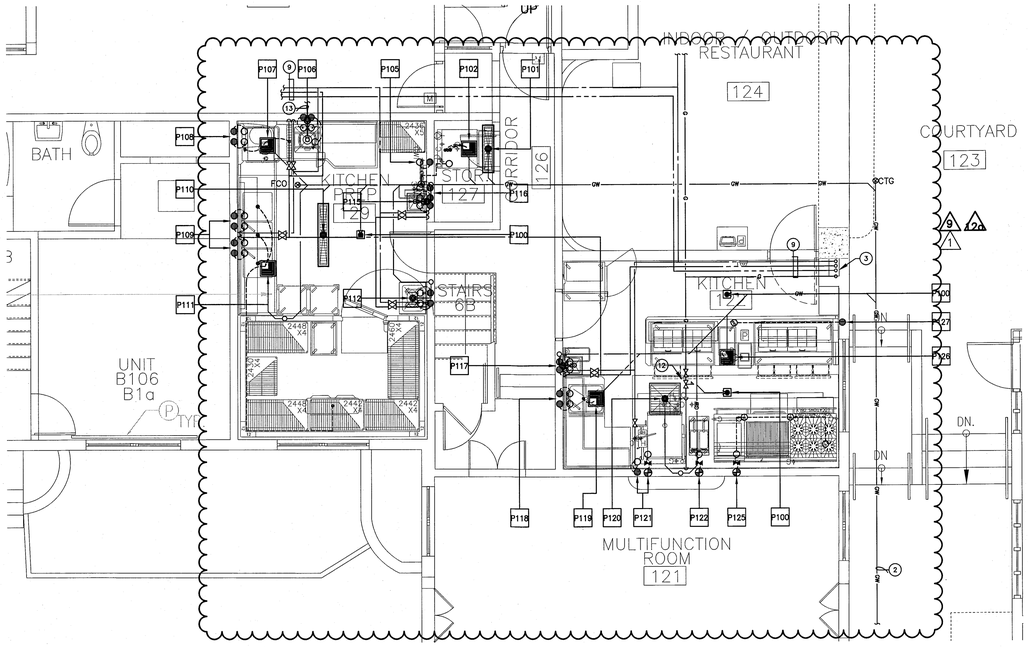

1ST FLOOR KITCHEN PLUMBING PLAN

SCALE: 1/4"=1'-0"

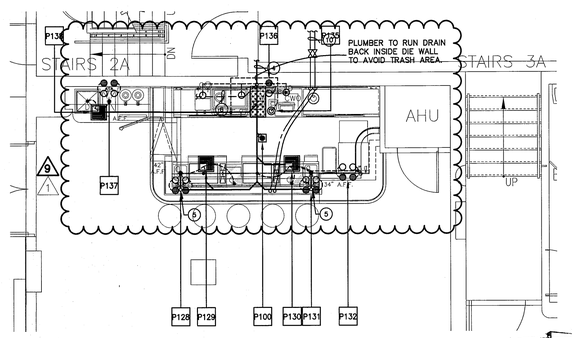

1ST FLOOR COFFEE BAR PLUMBING PLAN

SCALE: 1/4"=1'-0"

	REVIEWER INITIALS	DATE REVIEWED
BUILDING		
STRUCTURAL		
MECHANICAL		
ELECTRICAL		
PLUMBING	SF	11/10/14
SITE / CIVIL		

MTCI
PLAN REVIEW PROVIDER SERVICES, LLC
Construction Plans Review, Inspections, Training & Consulting

KEY NOTES:

1. NEW GAS SERVICE TO SERVICE TO KITCHEN.
2. NEW 4" GREASE WASTE PIPE FROM KITCHEN. REFER TO SHEET P1.02 FOR CONTINUATION.
3. HOT, COLD, GAS AND HWR PIPES FROM NEW KITCHEN WATER HEATER AT BASEMENT LEVEL BELOW. REFER TO SHEET P1.02 FOR CONTINUATION.
4. NEW 4" SANITARY PIPE. REFER TO SHEET P1.02 FOR CONTINUATION.
5. 2" AIR ADMITTANCE VALVE. MAKE ACCESSIBLE
6. NEW 2" VENT PIPE CONNECT TO EXISTING VENT SYSTEM.
7. HOT, COLD AND HWR PIPE FROM NEW KITCHEN WATER HEATER AT BASEMENT LEVEL BELOW.
8. HOT, COLD AND HWR PIPE FROM NEW KITCHEN WATER HEATER. REFER TO SHEET P1.02a FOR CONTINUATION.
9. HOT, COLD, GAS AND HWR PIPE FROM NEW KITCHEN WATER HEATER.
10. NEW 3/4" HOT AND COLD WATER CONNECT TO EXISTING HOT AND COLD WATER SYSTEM.
11. NEW 3/4" HOT AND COLD WATER. REFER TO SHEET P1.02a FOR CONTINUATION.
12. NEW GAS SHUT OFF VALVE AND PRV.
13. NEW 2" SANITARY PIPE. REFER TO SHEET P1.02 FOR CONTINUATION.

SEP 29 2014
STEVEN M. FELLER LICENSE No 22046 STATE of FLORIDA PROFESSIONAL ENGINEER
APPROVED MIAMI BEACH FIRE DEPARTMENT

STEVEN FELLER P.E. P.A.
FLORIDA P.E. Reg. # 22046
Certificate of Authorization # 00003427
500 N.E. THIRD AVENUE
FORT LAUDERDALE, FLORIDA 33301
PH: 954.467.1402 FAX: 954.467.5752
e-mail: fellerpe@fellerpe.com
JOB # 13153

HADDON HALL
1500 COLLINS AVE

MIAMI BEACH, FL

KEYPLAN N.T.S.

REVISIONS

NO.	DESCRIPTION	ISSUE DATE
1	PROGRESS TO 100% CD SET	02/07/2014
9	KITCHEN RELOCATION.	05-30-14
12	FIRE DEP'T. COMM..	09-29-14

100% CONSTRUCTION DOCUMENT SET

NORTH SEAL

Jonathan Cardello
Lic. # AR93391

ADD Inc Architecture Interiors Planning

One Biscayne Tower
Suite 1670
Two South
Biscayne Boulevard
Miami, Fl 33131
T. 305.482.8700
F. 305.482.8770
www.addinc.com
Lic. # AA26001507

Boston Miami

JOB NUMBER: 13036.00

CHECKED BY:

ISSUE DATE: MARCH 14, 2014

SCALE: AS NOTED

SHEET TITLE

ENLARGED BAR AND KITCHEN PLUMBING PLAN

SHEET NUMBER

P2.11

COPYRIGHT ADD INC 2011

File: E:\Version Hold\Version 12 Plumbing\P2.11 Enlarged Food Service.dwg | Layout: 211
User: greg | Date: Monday, September 29 2014 - 08:33:19 AM

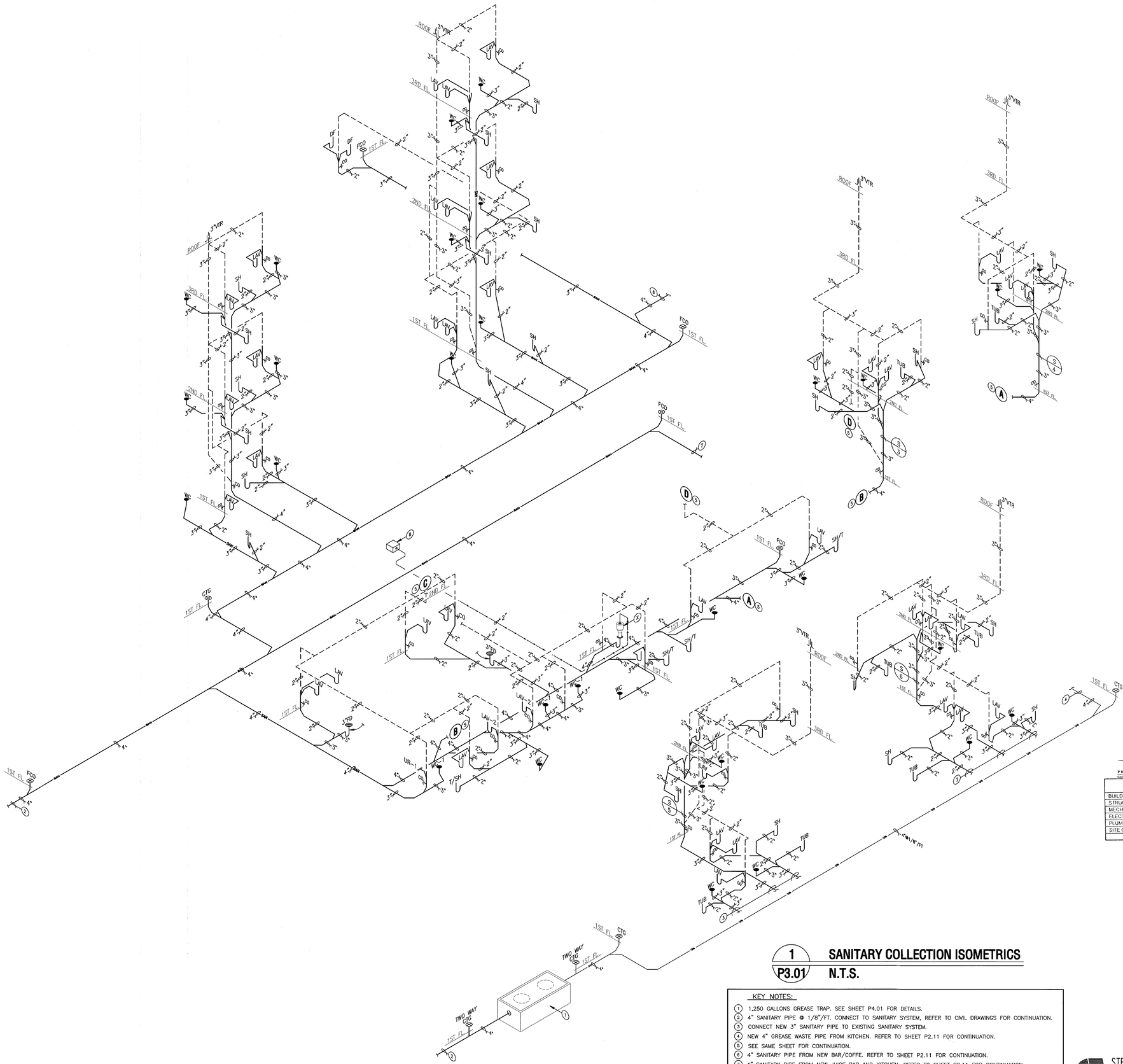

1 SANITARY COLLECTION ISOMETRICS
P3.01 N.T.S.

KEY NOTES:

1. 1,250 GALLONS GREASE TRAP. SEE SHEET P4.01 FOR DETAILS.
2. 4" SANITARY PIPE @ 1/8"/FT. CONNECT TO SANITARY SYSTEM, REFER TO CIVIL DRAWINGS FOR CONTINUATION.
3. CONNECT NEW 3" SANITARY PIPE TO EXISTING SANITARY SYSTEM.
4. NEW 4" GREASE WASTE PIPE FROM KITCHEN. REFER TO SHEET P2.11 FOR CONTINUATION.
5. SEE SAME SHEET FOR CONTINUATION.
6. 4" SANITARY PIPE FROM NEW BAR/COFFE. REFER TO SHEET P2.11 FOR CONTINUATION.
7. 4" SANITARY PIPE FROM NEW JUICE BAR AND KITCHEN. REFER TO SHEET P2.11 FOR CONTINUATION.
8. ELEVATOR SUMP PIT W/ PUMP. SEE SHEET P4.01 FOR DETAILS.

MTCI
PRIVATE PROVIDER SERVICES, LLC
Construction Plans Review, Inspections, Testing & Consulting

	REVIEWER INITIALS	DATE REVIEWED
BUILDING		
STRUCTURAL		
MECHANICAL		
ELECTRICAL		
PLUMBING	DG	11/10/14
SITE CIVIL		

FEB 05 2014

STEVEN M. FELLER
LICENSE
No 22046
STATE OF FLORIDA
PROFESSIONAL ENGINEER

APPROVED
MIAMI BEACH
FIRE DEPARTMENT

STEVEN FELLER P.E., PL
FLORIDA P.E. Reg. # 22046
Certificate of Authorization # 00003427
500 N.E. THIRD AVENUE
FORT LAUDERDALE, FLORIDA 33301
PH: 954.467.1402 FAX: 954.467.5752
e-mail: fellerpe@fellerpe.com
JOB # 13153

HADDON HALL
1500 COLLINS AVE
MIAMI BEACH, FL

KEYPLAN N.T.S.

REVISIONS

NO.	DESCRIPTION	ISSUE DATE

PERMIT SET

NORTH SEAL

Jonathan Cardello
Lic. # AR93391

ADD Inc Architecture Interiors Planning

One Biscayne Tower
Suite 1670
Two South
Biscayne Boulevard
Miami, Fl 33131
T. 305.482.8700
F. 305.482.8770
www.addinc.com
Lic. # AA26001507

Boston Miami

JOB NUMBER:	13036.00
CHECKED BY:	SF
ISSUE DATE:	JANUARY 24, 2014
SCALE:	AS NOTED

SHEET TITLE
PROTO

SANITARY COLLECTION ISOMETRIC

SHEET NUMBER
P3.01

COPYRIGHT ADD INC 2011

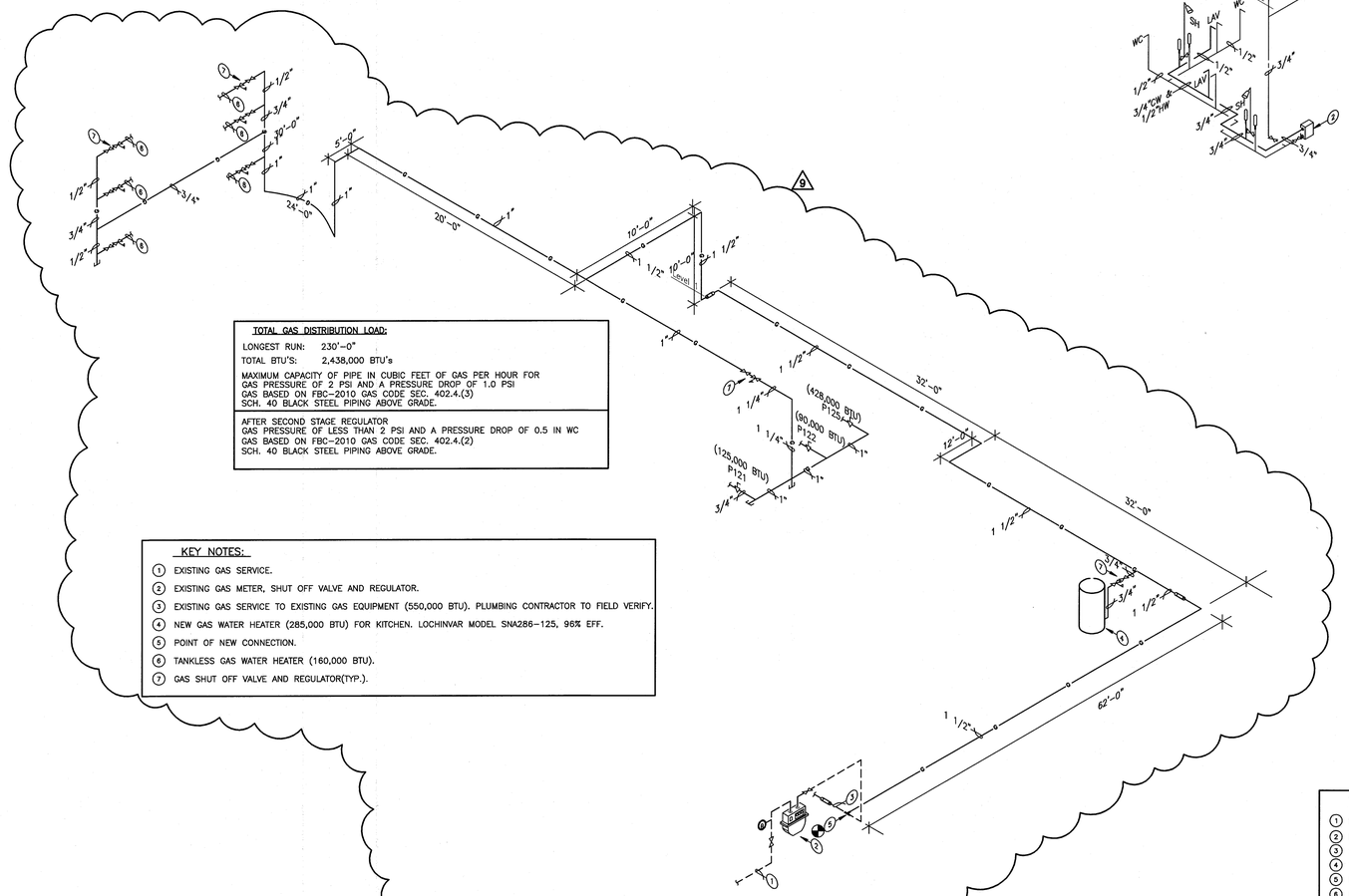

TOTAL GAS DISTRIBUTION LOAD:	
LONGEST RUN:	230'-0"
TOTAL BTU'S:	2,438,000 BTU's
MAXIMUM CAPACITY OF PIPE IN CUBIC FEET OF GAS PER HOUR FOR GAS PRESSURE OF 2 PSI AND A PRESSURE DROP OF 1.0 PSI GAS BASED ON FBC–2010 GAS CODE SEC. 402.4.(3) SCH. 40 BLACK STEEL PIPING ABOVE GRADE.	
AFTER SECOND STAGE REGULATOR GAS PRESSURE OF LESS THAN 2 PSI AND A PRESSURE DROP OF 0.5 IN WC GAS BASED ON FBC–2010 GAS CODE SEC. 402.4.(2) SCH. 40 BLACK STEEL PIPING ABOVE GRADE.	

KEY NOTES:

1. EXISTING GAS SERVICE.
2. EXISTING GAS METER, SHUT OFF VALVE AND REGULATOR.
3. EXISTING GAS SERVICE TO EXISTING GAS EQUIPMENT (550,000 BTU). PLUMBING CONTRACTOR TO FIELD VERIFY.
4. NEW GAS WATER HEATER (285,000 BTU) FOR KITCHEN. LOCHINVAR MODEL SNA286–125, 96% EFF.
5. POINT OF NEW CONNECTION.
6. TANKLESS GAS WATER HEATER (160,000 BTU).
7. GAS SHUT OFF VALVE AND REGULATOR(TYP.).

2 GAS ISOMETRIC
P3.02 N.T.S.

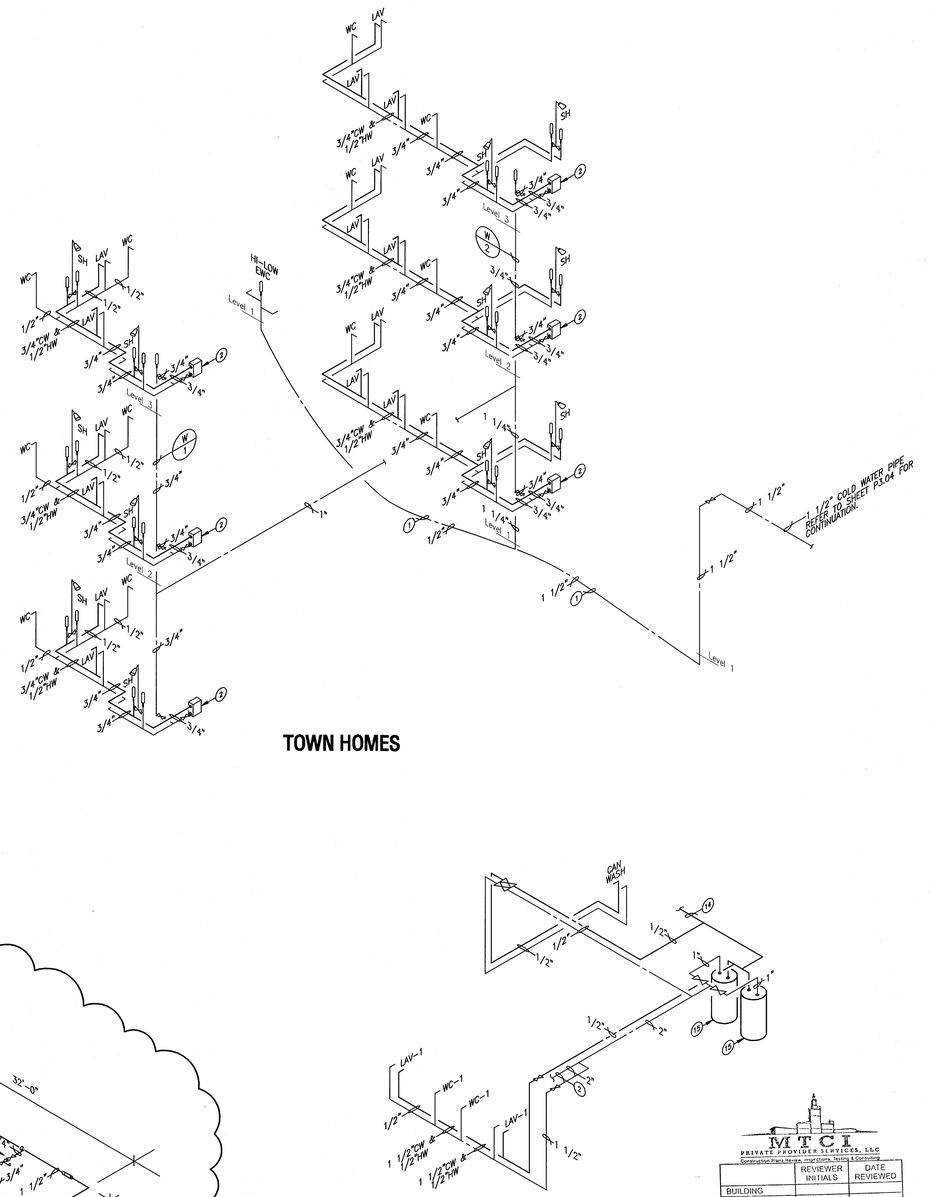

TOWN HOMES

LAUNDRY ROOM BASEMENT

1 WATER DISTRIBUTION ISOMETRIC
P3.02 N.T.S.

KEY NOTES:

1. NEW WATER PIPE RUNS BELOW GRADE WITH NO JOINT IN SLEVE.
2. NEW TANKLESS GAS WATER HEATER.
3. SOUX CHIEF WATER HAMMER ARRESTOR.
4. VACUUM BREAKER (TYP.).
5. INLINE WATER FILTER (TYP.).
6. NEW 2" COLD WATER PIPE. CONNECT TO EXISTING COLD WATER SYSTEM.
7. NEW HOT WATER PIPE FROM EXISTING WATER HEATER. RECONNECT TO EXISTING HOT WATER SYSTEM.
8. NEW LOCATION OF EXISTING GAS WATER HEATER.
9. NEW GAS WATER HEATER FOR NEW KITCHEN AT FLOOR ABOVE.
10. SEE SAME SHEET FOR CONTINUATION.
11. BATHROOM LAYOUT SIMILAR TO UNIT B204 AND B205 BUT MIRRORED.
12. COLD AND HOT WATER FROM WATER RISER UNDER SINK COUNTER AT THE WALL WITH SHUT–OFF VALVES AND PROVIDE ACCESS PANEL.
13. BATHROOM LAYOUT SIMILAR TO UNIT B114, B113., B216 AND B217 BUT MIRRORED.
14. NEW HOT WATER PIPE FROM HADDON HALL WATER HEATERS RECONNECT TO EXISTING HOT WATER SYSTEM.
15. NEW LOCATION OF EXISTING HADDON HALL WATER HEATER.

SEP 04 2014

STEVEN M. FELLER LICENSE No 22046 STATE OF FLORIDA PROFESSIONAL ENGINEER

APPROVED MIAMI BEACH FIRE DEPARTMENT

STEVEN FELLER P.E.,PL
FLORIDA P.E. Reg. # 22046
Certificate of Authorization # 00003427
500 N.E. THIRD AVENUE
FORT LAUDERDALE, FLORIDA 33301
PH: 954.467.1402 FAX: 954.467.5752
e-mail: fellerpe@fellerpe.com
JOB # 13153

HADDON HALL
1500 COLLINS AVE

MIAMI BEACH, FL

KEYPLAN N.T.S.

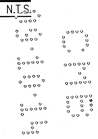

REVISIONS

NO.	DESCRIPTION	ISSUE DATE
9	KITCHEN RELOCATION.	05–30–14

100% CONSTRUCTION DOCUMENT SET

NORTH SEAL

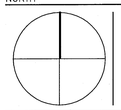

Jonathan Cardello
Lic. # AR93391

ADD Inc Architecture Interiors Planning

One Biscayne Tower
Suite 1670
Two South
Biscayne Boulevard
Miami, Fl 33131
T. 305.482.8700
F. 305.482.8770
www.addinc.com
Lic. # AA26001507

Boston Miami

MTCI PRIVATE PROVIDER SERVICES, LLC
Comprehensive Plans Review, Inspections, Testing & Compliance

	REVIEWER INITIALS	DATE REVIEWED
BUILDING		
STRUCTURAL		
MECHANICAL		
ELECTRICAL		
PLUMBING		
SITE CIVIL		

JOB NUMBER: 13036.00
CHECKED BY:
ISSUE DATE: MARCH 14, 2014
SCALE: AS NOTED

SHEET TITLE

WATER DISTRIBUTION ISOMETRIC

SHEET NUMBER

P3.02

COPYRIGHT ADD INC 2011

File: S:\Haddon Hall\01_Arch\01_13 Plans\Key\01_Water Distribution Isometrics.dwg | Layout: Layout1
Date: 9/4/2014 Time: 10:40:06 AM Scale: 1:1 Plotted By: Jonathan Cardello

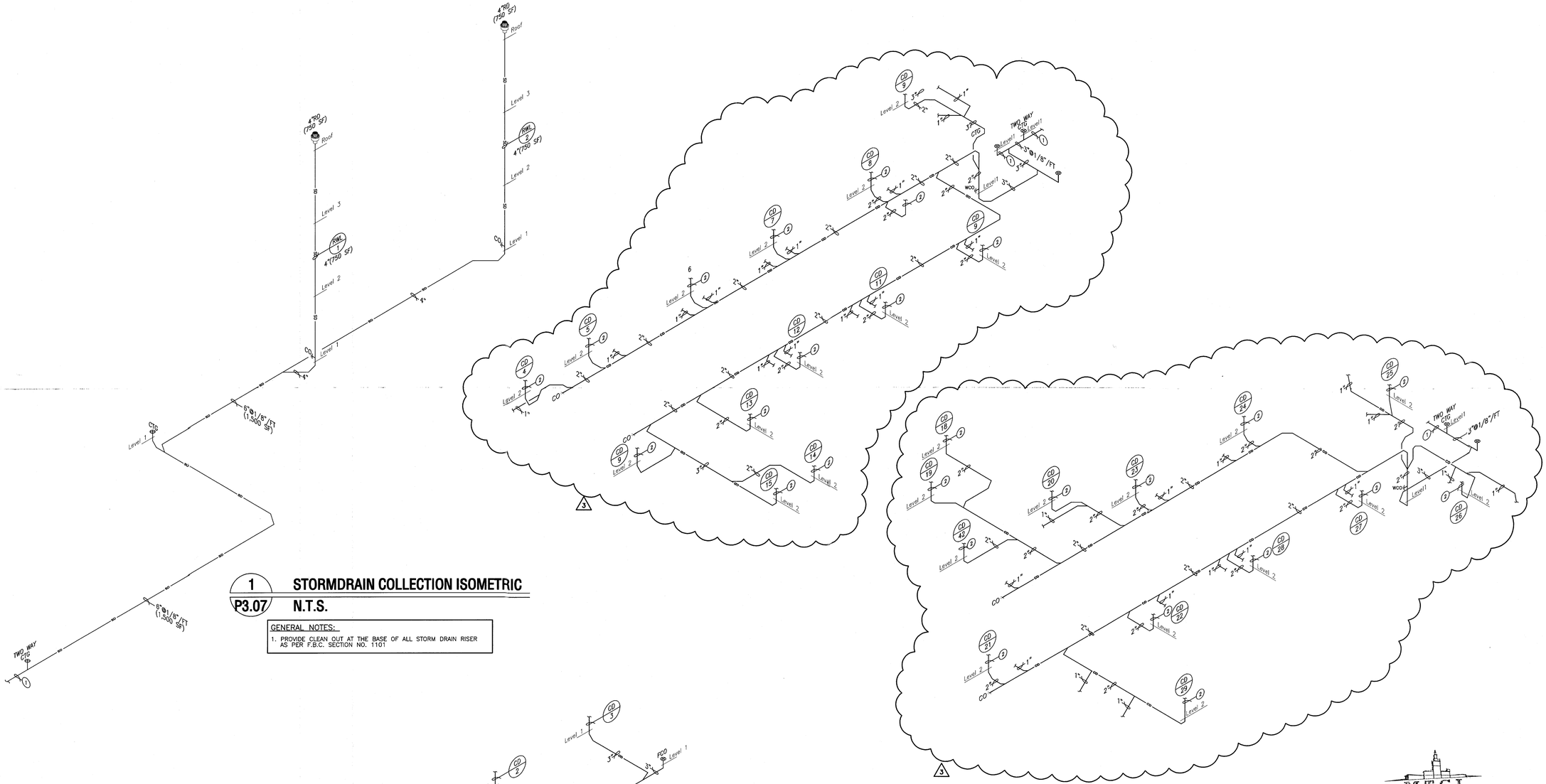

1 STORMDRAIN COLLECTION ISOMETRIC

P3.07 N.T.S.

GENERAL NOTES:

1. PROVIDE CLEAN OUT AT THE BASE OF ALL STORM DRAIN RISER AS PER F.B.C. SECTION NO. 1101

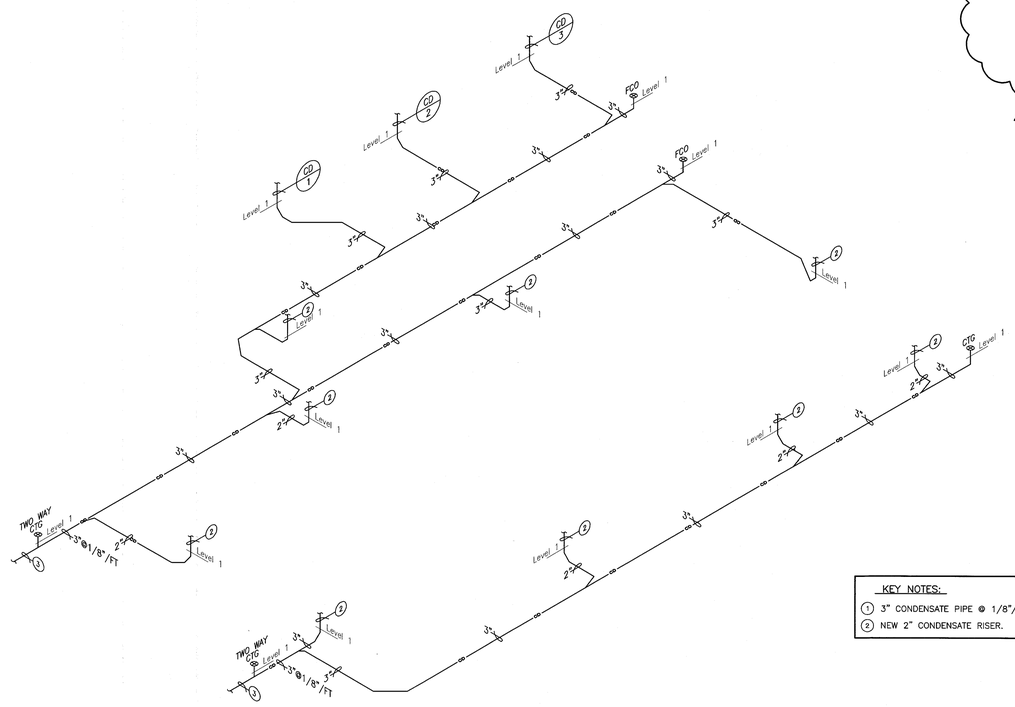

2 CONDENSATE DRAIN COLLECTION ISOMETRIC

P3.07 N.T.S.

KEY NOTES:

1. 3" CONDENSATE PIPE @ 1/8"/FT CONNECT TO STORM SYSTEM. REFER TO CIVIL DRAWINGS FOR CONTINUATION.
2. NEW 2" CONDENSATE RISER.

HADDON HALL
1500 COLLINS AVE
MIAMI BEACH, FL

KEYPLAN N.T.S.

REVISIONS

NO.	DESCRIPTION	ISSUE DATE
3	COORDINATION REVISION	03/25/14

MTCI
PRIVATE PROVIDER SERVICES, LLC
Construction Plans Review, Inspections, Testing & Certification

	REVIEWER INITIALS	DATE REVIEWED
BUILDING		
STRUCTURAL		
MECHANICAL		
ELECTRICAL		
PLUMBING	DG	11/10/14
SITE CIVIL		

100% CONSTRUCTION DOCUMENT SET

NORTH SEAL

Jonathan Cardello
Lic. # AR93391

ADD Inc Architecture Interiors Planning

One Biscayne Tower
Suite 1670
Two South
Biscayne Boulevard
Miami, Fl 33131
T. 305.482.8700
F. 305.482.8770
www.addinc.com
Lic. # AA26001507

Boston Miami

JOB NUMBER: 13036.00
CHECKED BY:
ISSUE DATE: MARCH 14, 2014
SCALE: AS NOTED

SHEET TITLE

STORM DRAIN ISOMETRIC

SHEET NUMBER P3.03

COPYRIGHT ADD INC 2011

STEVEN M. FELLER P.E. LICENSE No. 22046 STATE OF FLORIDA PROFESSIONAL ENGINEER
MAY 09 2014

APPROVED MIAMI BEACH FIRE DEPARTMENT

STEVEN FELLER P.E., PL
FLORIDA P.E. Reg. # 22046
Certificate of Authorization # 00003427
500 N.E. THIRD AVENUE
FORT LAUDERDALE, FLORIDA 33301
PH: 954.467.1402 FAX: 954.467.5752
e-mail: fellerpe@fellerpe.com
JOB # 13153

File: S:\Haddon Hall\13036.00 Storm Drainage Isometrics.dwg | Layout: Layout1
Date: 3/14/2014 11:53:03 AM by Steve Feller

KEY NOTES:

1. NEW 1" COLD WATER PIPE CONNECT EXISTING WATER SERVICE. PLUMBING CONTRACTOR TO FIELD VERIFY SIZE AND EXACT LOCATION OF EXISTING WATER SERVICE PRIOR TO NEW CONNECTION.
2. NEW LONGHINVAR SHIELD GAS WATER HEATER MODELSNA286-125* 285,000 BTU.
3. INLINE BACKFLOW PREVENTER.
4. WATER HAMMER ARRESTOR. SIZE AS PER MANUFACTURER RECOMMENDATION (TYP).
5. NEW 3/4" HOT AND 1/2" COLD WATER CONNECT TO EXISTING HOT AND COLD WATER SYSTEM.

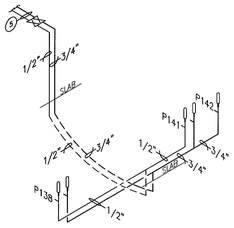

1ST FLOOR COFFEE BAR PLUMBING PLAN

NTS

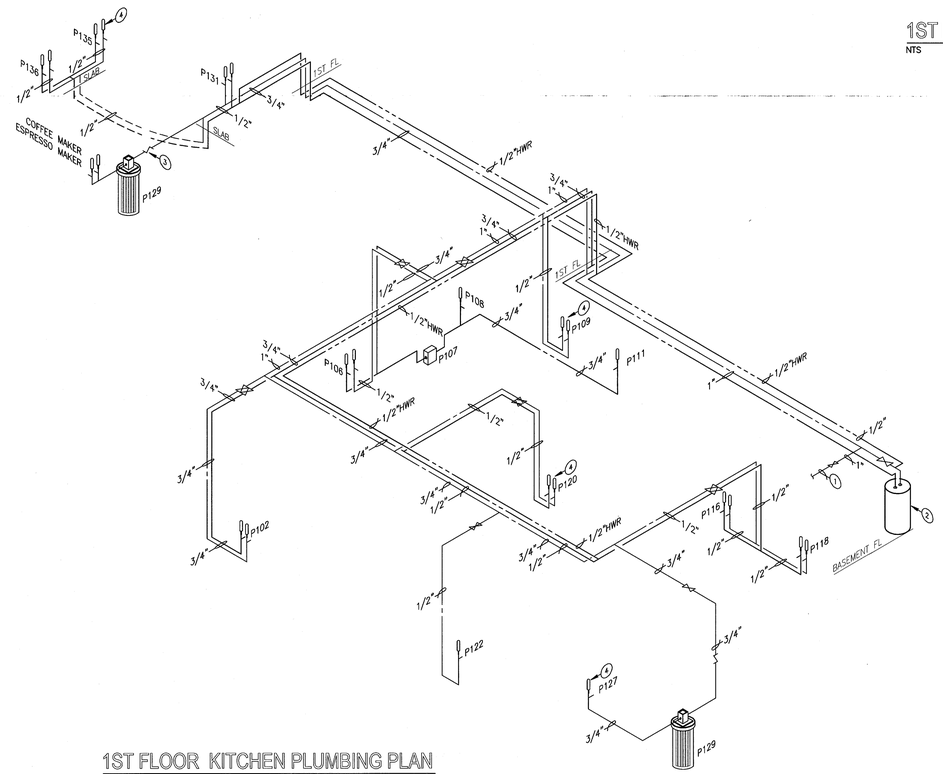

1ST FLOOR KITCHEN PLUMBING PLAN

NTS

1 P3.04 KITCHEN AND BAR WATER ISOMETRIC

N.T.S.

HADDON HALL
1500 COLLINS AVE

MIAMI BEACH, FL

KEYPLAN N.T.S.

REVISIONS

NO.	DESCRIPTION	ISSUE DATE
3	COORDINATION REVISION	03/25/14

MTCI
PRIVATE PROVIDER SERVICES, LLC
Construction Plans Review, Inspections, Testing & Education

	REVIEWER INITIALS	DATE REVIEWED
BUILDING		
STRUCTURAL		
MECHANICAL		
ELECTRICAL		
PLUMBING	VB	4/10/14
SITE CIVIL		

100% CONSTRUCTION DOCUMENT SET

NORTH SEAL

Jonathan Cardello
Lic. # AR93391

ADD Inc Architecture Interiors Planning

One Biscayne Tower
Suite 1670
Two South
Biscayne Boulevard
Miami, Fl 33131
T. 305.482.8700
F. 305.482.8770
www.add-inc.com
Lic. # AA26001507

Boston Miami

JOB NUMBER: 13036.00

CHECKED BY:

ISSUE DATE: MARCH 14, 2014

SCALE: AS NOTED

SHEET TITLE

KITCHEN AND BAR WATER ISOMETRIC

3 NEW SHEET MAY 09 2014

STEVEN M. FELLER LICENSE No. 22046 STATE OF FLORIDA PROFESSIONAL ENGINEER

APPROVED MIAMI BEACH FIRE DEPARTMENT

STEVEN FELLER P.E.,PL
FLORIDA P.E. Reg. # 22046
Certificate of Authorization # 00003427
500 N.E. THIRD AVENUE
FORT LAUDERDALE, FLORIDA, 33301
PH: 954.467.1402 FAX: 954.467.5752
e-mail: fellerpe@fellerpe.com
JOB # 13153

SHEET NUMBER P3.04

COPYRIGHT ADD INC 2011

Plot By: Albert Dulce 5/9/2014 - 10:45:45 AM | Layout: Layout1

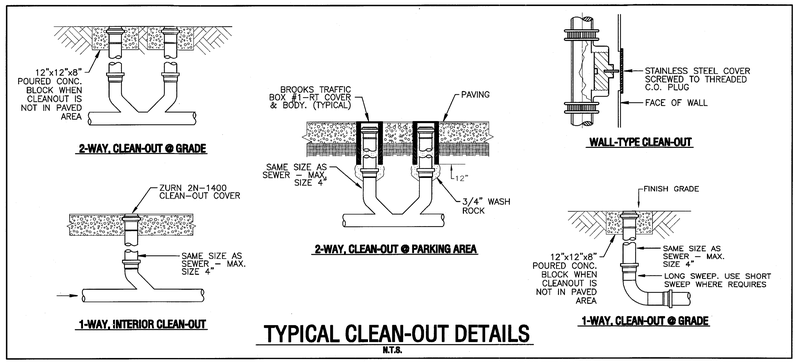

TYPICAL CLEAN-OUT DETAILS
N.T.S.

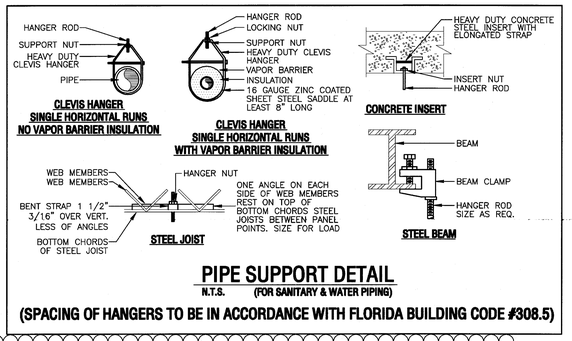

PIPE SUPPORT DETAIL
N.T.S. (FOR SANITARY & WATER PIPING)

(SPACING OF HANGERS TO BE IN ACCORDANCE WITH FLORIDA BUILDING CODE #308.5)

PLUMBING SYMBOLS & ABBREVIATIONS

HOT WATER PIPE	HW
COLD WATER PIPE	CW
HOT WATER RECIRCULAING	HWR
WATER HAMMER ARRESTOR	WHA
CHECK VALVE	CV
HOSE BIBB W/ VACUUM BREAKER & SHUT-OFF VALVE	HB
GATE VALVE (SHUT-OFF VALVE)	
STORM DRAINAGE PIPE	SD
GREASE WASTE PIPE	GW
SANITARY PIPE	SAN
CONDENSATE PIPE	CD
VENT PIPE	
PRESSURE RELIEF	P&T
DRAIN PAN	DP
WATER CLOSET	WC
VENT THRU ROOF	VTR
LAVATORY	LAV
JANITOR'S SINK	JS
FLOOR SINK	FS
FLOOR DRAIN	FD
PLANTER DRAIN	PD
DECK DRAIN	DD
ROOF DRAIN	RD
OVER FLOW DRAIN	OFD
FUNNEL FLOOR DRAIN	FFD
URINAL	UR
TUB/SHOWER (COMBINATION)	TS
BIDET	BD
BATH TUB	TUB
SHOWER	SH
ELECTRIC WATER COOLER	EWC
DRINKING FOUNTAIN	DF
BAR SINK	BS
ELECTRIC WATER HEATER	EWH
DISHWASHER	DW
KITCHEN SINK	KS
WASHING MACHINE	WM
ABOVE FINISH FLOOR	A.F.F.
BELOW FINISH FLOOR	B.F.F.
FLOOR CLEANOUT	FCO
CLEANOUT TO GRADE	CTG
WALL CLEANOUT	WCO
FIXTURE UNITS	FU
RAIN WATER LEADER	RWL
EMERGENCY OVERFLOW STORM DRAIN	OSD
EXISTING FLOOR CLEAN OUT	EFCO
CONNECT NEW PIPE INTO EXISTING	

NOTE:
NOT ALL SYMBOLS & ABBREVIATIONS APPLY TO THIS JOB.

PLUMBING GENERAL NOTES:

1. ALL WORKMANSHIP AND MATERIAL SHALL BE IN STRICT ACCORDANCE WITH APPLICABLE LOCAL CODES, RULES AND ORDINANCES.
2. CONTRACTOR SHALL VISIT THE JOB SITE AND THOROUGHLY FAMILIARIZE HIMSELF WITH ALL EXISTING CONDITIONS.
3. ALL MATERIAL SHALL BE NEW.
4. ALL WORK SHALL BE PERFORMED BY A LICENSED PLUMBING CONTRACTOR IN A FIRST CLASS WORKMANLIKE MANNER. THE COMPLETED SYSTEM SHALL BE FULLY OPERATIVE.
5. ALL EXCAVATION AND BACKFILL AS REQUIRED FOR THIS PHASE OF CONSTRUCTION SHALL BE A PART OF THIS CONTRACT.
6. REQUIRED INSURANCE SHALL BE PROVIDED BY THE CONTRACTOR FOR PROTECTION AGAINST PUBLIC LIABILITY AND PROPERTY DAMAGE FOR THE DURATION OF WORK.
7. CONTRACTOR SHALL SECURE AND PAY FOR ALL PERMITS, FEES, INSPECTION & TESTS.
8. DRAWINGS ARE DIAGRAMMATIC. DO NOT SCALE FOR THE EXACT LOCATION OF FIXTURES, PIPING, EQUIPMENT, ETC.
9. ALL WORK SHALL BE COORDINATED WITH OTHER TRADES TO AVOID INTERFERENCE WITH THE PROGRESS OF CONSTRUCTION. REPORT ANY DISCREPANCY TO ENGINEER/ ARCHITECT PRIOR TO BEGINNING CONSTRUCTION.
10. VERIFY LOCATION, SIZE, INVERTS OF ALL EXISTING UTILITIES PRIOR TO BEGINING CONSTRUCTION. ADVICE ENGINEER OF ANY DISCREPANCIES.
11. WATER PIPING SHALL BE TYPE "L" COPPER FOR 2" & UNDER & TYPE "K" COPPER FOR 2-1/2" AND ABOVE. ALL UNDERGROUND WATER PIPING SHALL BE TYPE "K" COPPER.
12. SOIL, WASTE, VENT AND STORM DRAIN PIPING SHALL BE CAST IRON NO HUB 301-72 ABOVE GRADE AND SCH. 40 PVC BELOW GRADE.
13. AIR CONDITIONING CONDENSATE DRAIN PIPING SHALL BE COPPER DRAIN WASTE & VENT PIPING AND FITTINGS ABOVE GRADE & SCH. 40 PVC BELOW GRADE. INSULATE ALL CONDENSATE PIPING EXCEPT UNDERGROUNDAND ELECTRIC HEAT WRAP WHERE EXPOSED TO FREEZING CONDITIONS.
14. INSULATION:
- 14A. HOT WATER & HOT WATER RETURN PIPING: 1/2" TO 1" USE 1" PREFORMED FIBERGLASS PIPE INSULATION W/ FACTORY JACKET. 1 1/4" TO 2" USE 1 1/2" PREFORMED FIBERGLASS PIPE INSULATION W/ FACTORY JACKET. 2 1/2" TO 6" USE 2" PREFORMED FIBERGLASS PIPE INSULATION W/ FACTORY JACKET.
- 14B. HORIZONTAL STORM DRAIN WITH IN CONDITION SPACES USE 1" PERFORMED FIBERGLASS PIPE INSULATION WITH FACTORY JACKET.
- 14C. CONDENSATE PIPING ABOVE GARAGE USE 3/4" IMCOA IMCOLOCK.
- 14D. EXHAUST PIPING USE 3" THICK CALCIUM SILICATE BLOCK INSULATION WITH 1200 F. STEVENS CLASS CLOTH WRAP.
- 14E. THE FIRST 8 FEET OF THE COLD WATER PIPE FROM THE WATER HEATER USE 3/4" IMCOA IMCOLOCK.
- 14F. INSULATE PER A.D.A. ALL EXPOSED HANDICAP LAVATORIES DRAIN PIPING AND HOT & COLD STOP AND SUPPLIES. COVERS SHALL BE SOFT, REMOVABLE AND UPC APPROVED. MANUFACTURE: PLUMBEREX HANDY-SHIELD OR PRO-SERIES.
- 14G. INSULATION IN ANY FIRE RATED WALL ASSEMBLY SHALL BE PREFORMED FIBERGLASS PIPE INSULATION.
15. ALL FIXTURES MUST BE PROVIDED WITH READILY ACCESSIBLE STOPS & APPROPIATELY MARKED ACCESS PANELS. COORDINATE LOCATIONS WITH GENERAL CONTRACTOR PRIOR TO INSTALLATION.
16. FURNISH AND INSTALL SIOUX CHIEF #6605B WATER HAMMER ARRESSTOR AT ALL WASHING MACHINE, BATH TUB & ALL SHOWERS IN ALL RESIDENTIAL UNITS, WHERE TUB SHOWER HEAD EXCEEDS 6 FEET FROM TUB VALVE OR WHERE TUB FILL SPOUT IN MORE THAN 6 FEET FROM TUB VALVE A SIOUX CHIEF #695-01 SHALL BE INSTALLED WITHIN 12" ON THE SUPPLY SIDE OF THE VALVE. SIOUX CHIEF HYDRA-RESTER AT EACH GROUP OF FIXTURES IN COMMERCIAL BUILDIING.
17. DIELECTRIC COUPLINGS ARE REQUIRED BETWEEN ALL DISSIMILAR METAL IN PIPING AND EQUIPMENT CONNECTIONS.
18. ISOLATE COPPER PIPE FROM HANGER OR SUPPORTS WITH ISOLATOR PAD. (HAIR FELT LINING).
19. ALL FIRE RATED FLOOR AND WALL PENETRATIONS SHALL BE PROPERLY PROTECTED FROM FIRE, SMOKE AND WATER PENETRATION BY FILLING VOIDS BETWEEN PIPE & WALL/FLOOR SLEEVES WITH U.L. APPROVED FIRE/SMOKE/WATER SEALANT.
20. CONTRACTOR SHALL GUARANTEE ALL MATERIALS & WORKMANSHIP FREE FROM DEFECTS FOR A PERIOD OF NOT LESS THAN ONE (1) YEAR FROM DATE OF ACCEPTANCE BY OWNER. CORRECTION OF ANY DEFECTS SHALL BE COMPLETED WITHOUT ADDITIONAL CHARGE AND SHALL INCLUDE REPLACEMENT OR REPAIR OF ANY OTHER PHASE OF THE INSTALLATION WHICH MAY HAVE BEEN DAMAGED.
21. PROVIDE 1/2" TRAP PRIMER LINE FOR ALL FLOOR DRAINS FROM THE NEAREST PLUMBING FIXTURE OR PROVIDE SIOUX CHIEF #695 TRAP PRIMER.
22. PROVIDE ACCESS PANELS FOR ALL CONCEALED VALVES AND ALL WATER HAMMER ARRESTERS. ACCESS PANELS IN RATED WALLS MUST MAINTAIN THE SAME RATING & MUST MATCH THE FINISH OF THE WALL IN WHICH IT IS INSTALLED.
23. PROVIDE CHROME PLATED COMBINATION COVER PLATE & CLEANOUT PLUG OR ACCESS PANEL FOR ALL WALL CLEANOUTS ZURN ZS-1469 SERIES C.O. OR APPROVED ACCESS PANEL.
24. NO COMBUSTIBLE MATERIAL TO BE USED IN MECHANICAL ROOMS OR IN CEILING SPACES WHERE USED AS RETURN AIR PLENUMS.
25. NO WATER, SANITARY OR DRAINAGE PIPING PERMITTED IN ELECTRICAL OR ELEVATOR EQUIPMENT ROOMS.; WATER STUBBED THRU FOR ELECTRICAL GROUND & SPRINKLER HEAD AND PIPE WITH CONTROL VALVE AS APPROVED BY LOCAL BUILDING AND FIRE DEPARTMENTS.
26. ALL HOSE BIBBS SHALL BE CHROME PLATED 3/4" SOLID FLANGE THREADED HOSE & LOOSE KEY W/VACUUM BREAKER - WATTS 8A, MOUNTED 26" ABOVE GRADE WALL HYDRANTS TO BE ZURN Z- 1350-5 OR FINISH FLOOR UNLESS OTHERWISE NOTED.
27. DRAINS SHALL BE AS FOLLOWS: (ZURN)
ROOF DRAIN. (#Z-100-ZA)
DECK DRAIN @ POOL DECK. (#Z158-85-VP)
DRAIN IN GARAGE AREA. (#Z-541)
DRAIN IN BATHROOM AREA. (#ZN415-P-6B)
FLOOR SINK IN BAR OR KITCHEN AREA. (#Z-1900-3-23)
FLOOR DRAIN IN KITCHEN AREA. (ZURN-#Z-550-ZB-Y)
FUNNEL FLOOR DRAIN (ZURN #Z415)
DRAIN TROUGHT (ZURN #Z-1723)
TRENCH DRAIN. (#Z-886-CG)
28. INTERIOR FLOOR CLEANOUTS SHALL BE ZURN ZN1400.
29. ALL SHOWER VALVES SHALL BE ANTI-SCALD/ PRESSURE BALANCING.
30. ALL PLUMBING FIXTURES SHALL MEET STATE AND LOCAL CODES.

FIXTURE TYPE	WATER PIPE SIZE	NOMINAL SAN. SIZE	MAXIMUM FLOW RATES
WATER CLOSET (TANK)	1/2"	3"	1.28 GPF
WATER CLOSET (FLUSH VALVE)	1"	3"	1.28 GPF
LAVATORY	1/2"	1 1/4"	1.5 GPM
ELECTRIC WATER COOLER	1/2"	1 1/4"	.5 GPM
SHOWER	1/2"	2"	1.5 GPM
KITCHEN SINK	1/2"	1 1/2"	1.5 GPM

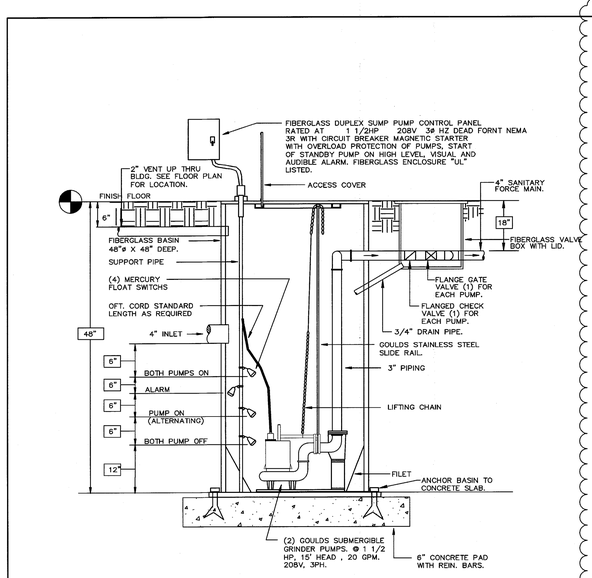

SANITARY LIFT STATION
N.T.S.

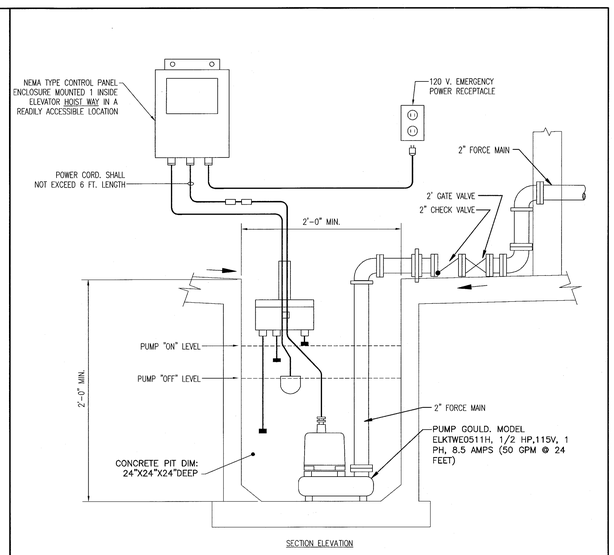

ELEVATOR SUMP PUMP (SIMPLEX) DETAIL
N.T.S.

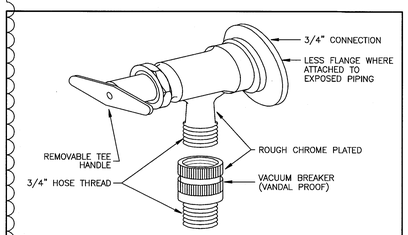

HOSE BIBB DETAIL
N.T.S.

NOTE:
ANY VENT WITHIN 10'-0" OF ANY DOOR, WINDOW, OR EXHAUST OPENINGS SHALL EXTEND NOT LESS THAN 3'-0" ABOVE SUCH

VENT THRU ROOF DETAIL
N.T.S.

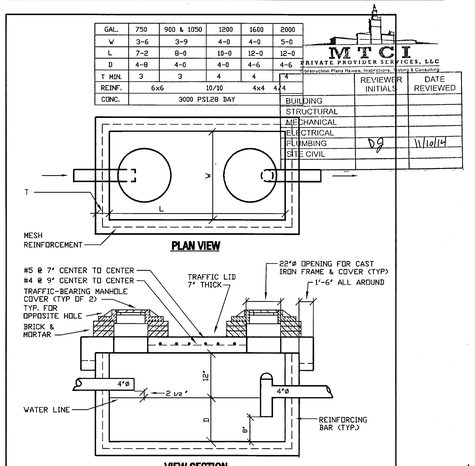

GREASE TRAP DETAIL
N.T.S.

MTCI
PRIVATE PROVIDER SERVICES, LLC
Construction Plans Review, Inspections, Testing & Consulting

DISCIPLINE	REVIEWER INITIALS	DATE REVIEWED
BUILDING		
STRUCTURAL		
MECHANICAL		
ELECTRICAL		
PLUMBING	DS	5/16/14
SITE CIVIL		

STEVEN FELLER P.E.,P.A.
FLORIDA P.E. Reg. # 22046
Certificate of Authorization # 00003427
500 N.E. THIRD AVENUE
FORT LAUDERDALE, FLORIDA 33301
PH: 954.467.1402 FAX: 954.467.5752
e-mail: fellerpe@fellerpe.com
JOB # 13153

MAY 09 2014

STEVEN N. FELLER LICENSE No 22046 STATE OF FLORIDA PROFESSIONAL ENGINEER

APPROVED MIAMI BEACH FIRE DEPARTMENT

HADDON HALL
1500 COLLINS AVE
MIAMI BEACH, FL

KEYPLAN N.T.S.

REVISIONS

NO.	DESCRIPTION	ISSUE DATE
8	DREM COMMENTS	04-23-14

100% CONSTRUCTION DOCUMENT SET

NORTH SEAL

Jonathan Cardello
Lic. # AR93391

ADD Inc Architecture Interiors Planning

One Biscayne Tower
Suite 1670
Two South
Biscayne Boulevard
Miami, Fl 33131
T. 305.482.8700
F. 305.482.8770
www.addinc.com
Lic. # AA26001507

Boston Miami

JOB NUMBER: 13036.00
CHECKED BY:
ISSUE DATE: FEBRUARY 18, 2014 MARCH 14, 2014
SCALE: AS NOTED

SHEET TITLE
PLUMBING DETAILS

SHEET NUMBER
P4.01

COPYRIGHT ADD INC 2011

File: P:\Haddon Hall\Revit\Plumbing_Details.rvt
User: Adam Tobias
Tuesday, May 6 2014 01:32:31 PM

SHOWER/FLOOR DRAIN STUB

CONCRETE ON WOOD FORM
FOR FLOORS

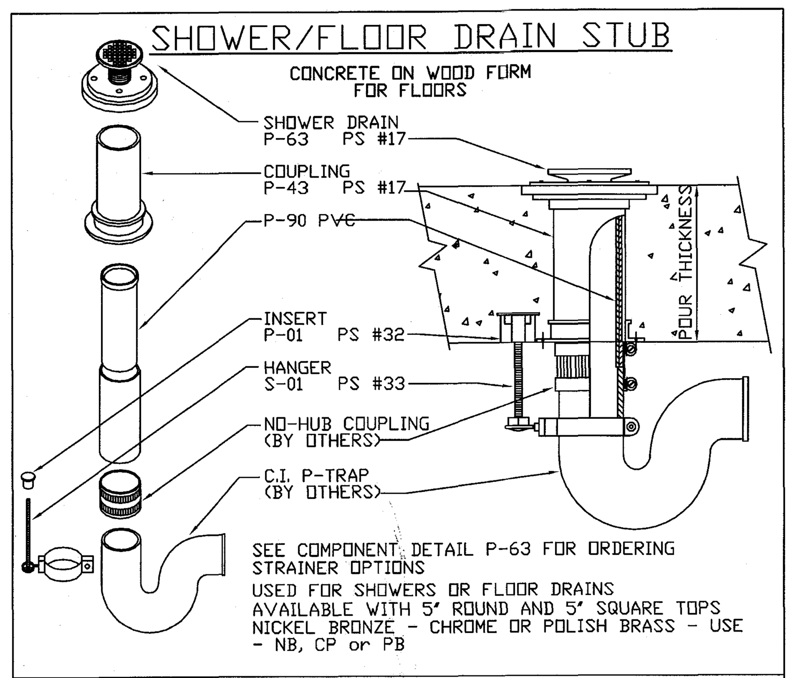

SEE COMPONENT DETAIL P-63 FOR ORDERING STRAINER OPTIONS
USED FOR SHOWERS OR FLOOR DRAINS
AVAILABLE WITH 5' ROUND AND 5' SQUARE TOPS
NICKEL BRONZE - CHROME OR POLISH BRASS - USE - NB, CP or PB

MPORTANT NOTES:

1. Remove the clamping ring & strainer use duct tape over the top of shower base flange to protect during concrete pour for shower. Not applicable for floor drains.
2. Use nails through the flange holes to mount shower to deck.
3. Set P-01 concrete insert abutting against the mounting flange.
4. Insert & solvent weld the proper length P90-HI-Temp PVC pipe into the bottom of drain coupling.
5. Connect the no-hub P-trap to the liner pipe w/ no-hub coupling.
6. Install the S-01 Hanger to the P-trap in a secure manner.
7. A blank ProSeal Plug can be used in top for water testing.
8. Install clamping ring to waterproofing material - insert strainer.

W.H. Directory Reference 99 Edition
Firestop Device
W.H. Design No. PS/PH 120-02
F Rating 2 Hrs.

PROSET SYSTEM FIRESTOP PENETRATOR

DATE : 3-1-92
DRG . NO . B 6320-A

PROSEAL PLUG DEVICE

CONCRETE ON WOOD FORM
FOR FLOORS OR WALLS

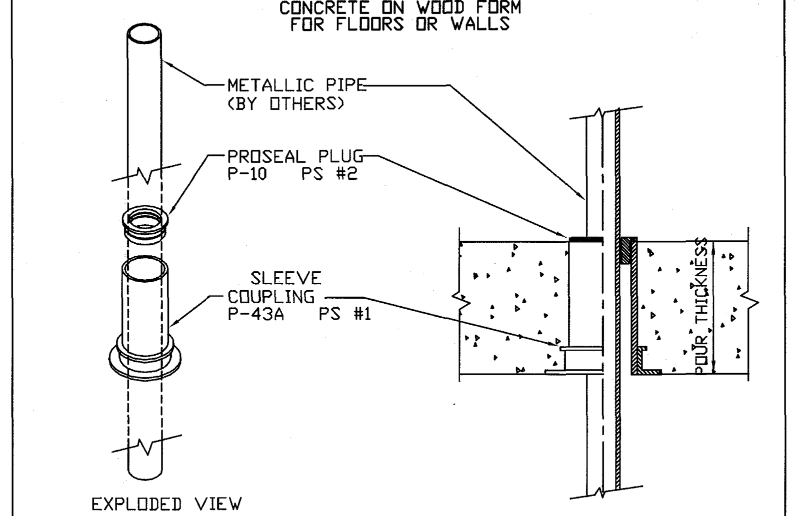

IMPORTANT NOTES :

1. Use nails through flange holes to mount the sleeve coupling to the deck.
2. After concrete is poured, remove protective cap.
3. Insert pass through piping up through the sleeve coupling.
4. Install the proper size split ProSeal Plug around the pipe & drive in from the top side.
5. Use two ProSeal plugs for wall installation.

Alternate : Plugs may be solvent cemented in for waterproofing and ease of installation.

W.H. Directory Reference 99 Edition
Firestop Device
W.H. Design No. PS/PHV 120-03
F Rating 2 Hrs.or 3 Hrs or 4 Hrs

PROSET SYSTEM FIRESTOP PENETRATOR

DATE : 3-14-95
DRG . NO . A-1010-A

PROSEAL CLOSET STUB

POURED CONCRETE ON WOOD OR STEEL FORMS
FOR FLOORS

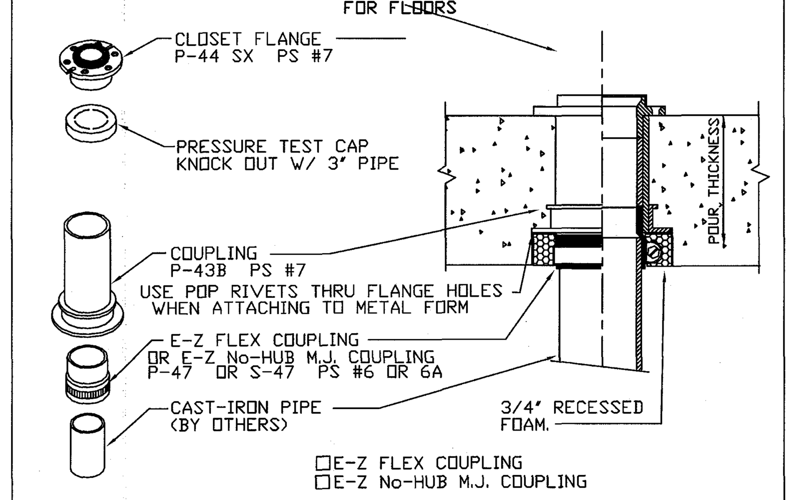

☐E-Z FLEX COUPLING
☐E-Z No-HUB M.J. COUPLING

IMPORTANT NOTES :

1. Use nails through flange holes to mount the coupling to the deck.
2. After concrete is poured, do not remove test cap until testing is done and * closet is ready to set. * Use a 3" pipe to knock out test cap. The knock out piece is sized not to fall into the drain line
*3. Insert & solvent weld the * E-Z Flex or E-Z No-Hub into the bottom of the coupling
4. Connect the closet bend into the E-Z Flex or E-Z No-Hub & tighten S.S. band.
5. Insert & solvent cement the P-44-SX closet flange with the built-in seal into the stub and set toilet.

* A special P44-HX flange is available in a longer 4" extention length if the finished floor is raised.
* The new elastomeric seal on this flange has been tested to hold a 10 ft. head of water pressure.
* See E-Z Flex installation instructions.

W.H. Directory Reference 01 Edition
Firestop Device
W.H. Design No. PS/PH 120-13
F Rating 2 & 3 Hrs.

PROSET SYSTEM FIRESTOP PENETRATOR

DATE : 3-1-02
DRG . NO . B-4402-A

TUB BOX ASSEMBLY

POURED CONCRETE ON WOOD FORM
FOR FLOORS

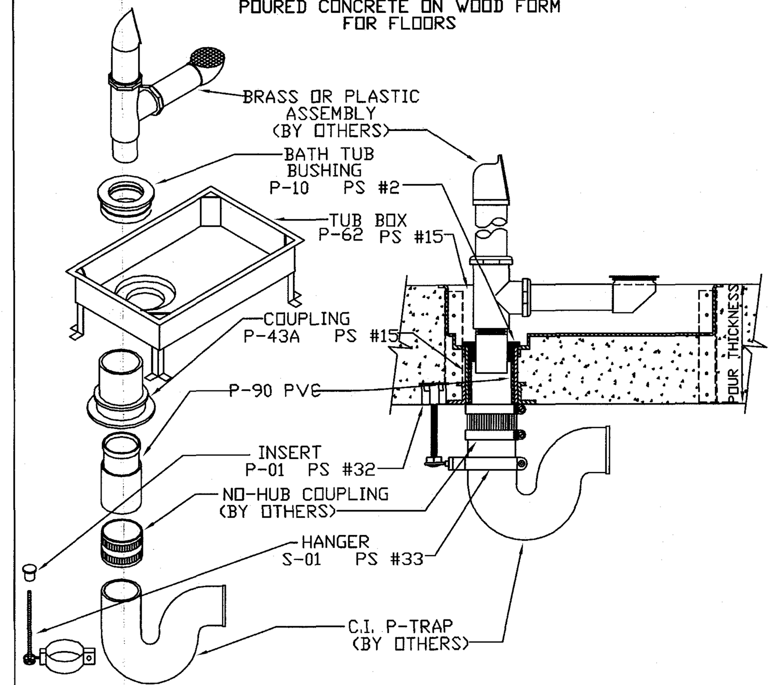

IMPORTANT NOTES :

1. Insert the proper height snap-in support legs & solvent cement the coupling into the openings into the socket in the tub box.
2. Use nails through the leg & flange holes to mount box to deck.
3. Set P-01 concrete insert abutting against the mounting flange.
4. After the concrete pour, insert & solvent cement the proper length P90 HI-Temp PVC pipe into the P-43A coupling.
5. Install the cast iron P-Trap to the liner using a no-hub coupling & install the S-01 hanger to the P-Trap in a secure manner.
6. Remove styrofoam from tub box, knock out test plug & insert either a P-25661 tub bushing for a pipe size or P-25662 tube size W & D.

W.H. Directory Reference 99 Edition
Firestop Device
W.H. Design No. PS/PH 120-02
F Rating 2 or 3 Hrs.

PROSET SYSTEM FIRESTOP PENETRATOR

DATE : 3-1-92
DRG . NO . B-6210-A

RISER CLAMP DEVICE

CONCRETE ON WOOD FORM
FOR FLOORS OR WALLS

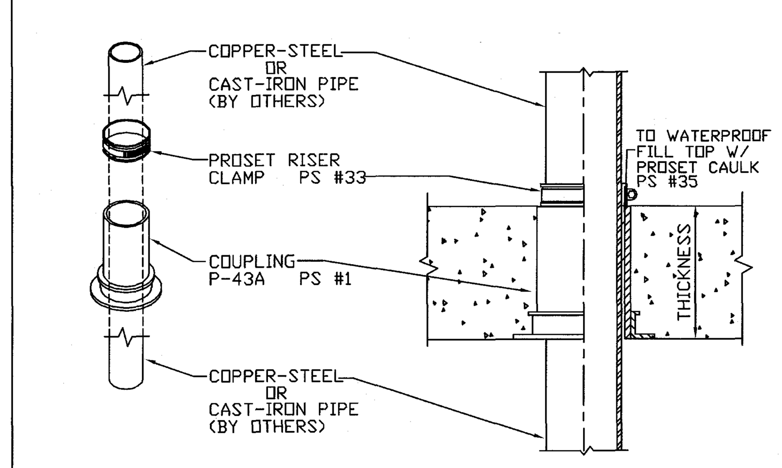

IMPORTANT NOTES :

1. Use nails through flange holes to mount the coupling to deck.
2. After the concrete pour, remove protective cap.
3. Insert the copper, c.i. or steel pipe through the coupling.
4. Fill void at top with ProSet caulking to waterproof.
5. Install riser clamp around pipe to support and draft stop. Clamp on both sides for walls.
6. When ordering riser clamp - Use suffix CU for copper - CI for cast iron or S for steel pipe.
7. Use Black letter Sleeve Pipe for steel/cast iron-Red letter pipe for copper.

W.H. Directory Reference 99 Edition
Firestop Device
W.H. Design No. PS/PHV 180-01
F Rating 3 Hrs.

PROSET SYSTEM FIRESTOP PENETRATOR

DATE : 3-14-95
DRG . NO . A-1014-A

WL 2083

Classified UL System

1 Hour Fire Rated Through Penetration Firestop for Single Plastic Pipe through Gypsum Walls using TREMstop WS and TREMstop MCR.

TREMCO
3735 Green Rd.
Beachwood, OH, 44122

Drawing not to scale

Configuration A

F-Rating = 1 Hr.
T-Rating = 0 Hr.

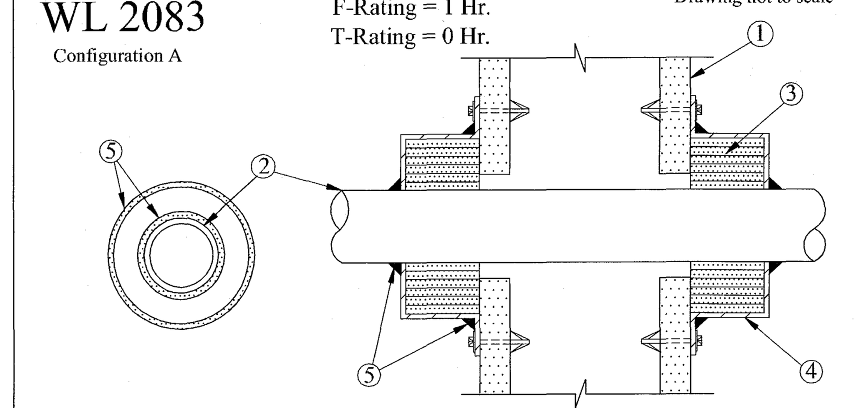

① Pre-Rated Gypsum Wallboard/Stud Wall Assembly

② Plastic Pipe - Nom. 4" diam. (or smaller) Sch. 40 PVC pipe for use in open or closed piping systems. See table below for annular space requirements.

③ TREMstop WS - Intumescent wrap strips, continuously wrapped around the outer circumference of the pipe on both sides of wall assembly.

Nom. Pipe Diameter (in.)	Max. Annular Space (in.)	Min. Layers of Wrap Strips
1-1/2	1/16	3
2	3/16	3
3	1/8	4
4	1/8	6
4	3/8	7

④ TREMstop MCR - Prefabricated steel collar wrapped over the wrap strips (Item 3) and mechanically fastened to both sides of the wall assembly.

⑤ FYRE-SIL - Min. 1/4" thickness of sealant applied at the interface of the wall and collar, and the interface of the collar and pipe. Sealant applied on both sides of wall.

Project:
Location:
Installer:
Signature:

The Tremco products used above have been tested in accordance with the following:
• ASTM E814 (UL1479) Standard Test Method for Through Penetration Firestopping.

Date: 3/13/97 | Drawing: TW-2083
Approved by: J. Pitcole

The above described assembly has been tested and is based on both past and anticipated performance criteria. Tremco shall not be liable for any damages, direct or consequential, resulting from use of this material or design. Tremco shall only be responsible for replacing material found to be defective.

FA 2024

Classified UL System

2 Hour Fire Rated Through Penetration Firestop for Single Plastic Pipe through Concrete Floors using FYRE-CAN.

TREMCO
3735 Green Rd.
Beachwood, OH, 44122

Drawing not to scale

Configuration A

F-Rating = 2 Hr.
T-Rating = 0, 1/4, 1, 1-1/2 & 2 Hr.

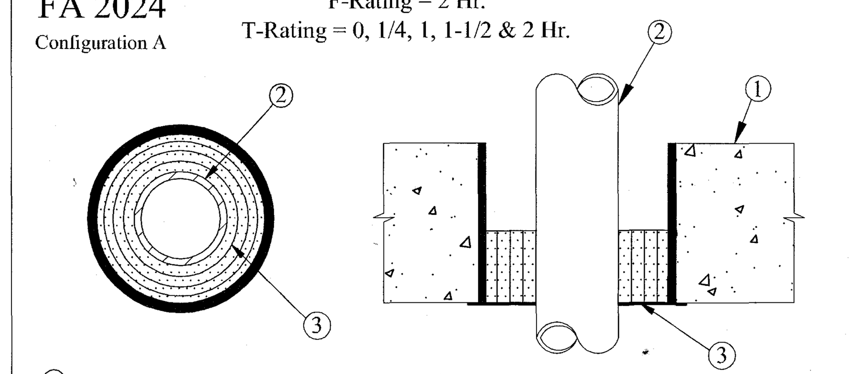

① Pre-Rated Concrete Floors = Min. 4-1/2" thickness

② Plastic Pipe - Nom. 8" diam. (or smaller) Sch. 40 solid core PVC pipe for use in open or closed piping systems.

③ FYRE-CAN - Galv. steel collar with steel plate lined with intumescent material. See table below for firestop system installation instructions.

Nom Pipe Diam. (in.)	Device Size	Min. Diam. of Opening (in.)	Max. Diam. of Opening (in.)	T-Rating (Hr.)
1-1/2	T-1.5	3	4	2
2	T-2	3-1/2	4	2
3	T-3	5-1/4	6	1-1/2
4	T-4	6-1/2	7	0
6	T-6	8-1/2	9	1/4
8	T-8	11-1/2	12	1

④ Mortar - (not shown) - To be used if opening is larger than min. diameter in the table above. Min. 4-1/2" thickness of mortar or hydraulic cement applied within opening.

Project:
Location:
Installer:
Signature:

The Tremco products used above have been tested in accordance with the following:
• ASTM E814 (UL1479) Standard Test Method for Through Penetration Firestopping.

Date: 12/26/96 | Drawing: TFA-2024
Approved by: J. Pitcole

The above described assembly has been tested and is based on both past and anticipated performance criteria. Tremco shall not be liable for any damages, direct or consequential, resulting from use of this material or design. Tremco shall only be responsible for replacing material found to be defective.

CAJ 1179

Classified UL System

3 Hour Fire Rated Through Penetration Firestop for Single Metal Pipe through Concrete Floors or Walls using FYRE-SIL or FYRE-SIL S/L.

TREMCO
3735 Green Rd.
Beachwood, OH, 44122

Drawing not to scale

F-Rating = 3 Hr.
T-Rating = 0 Hr.

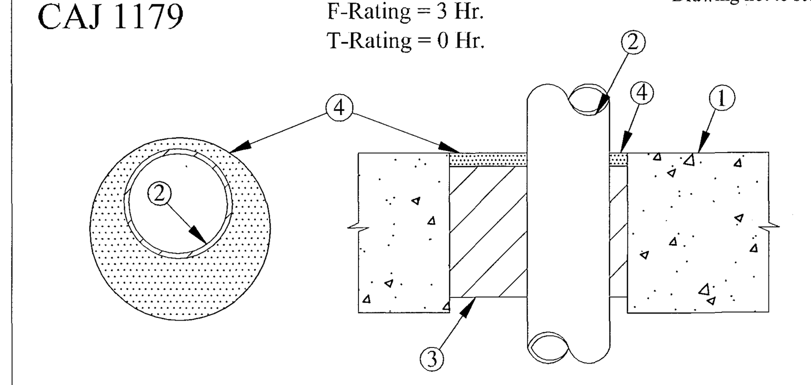

① Pre-Rated Concrete Floors or Block Walls = Min. 4-1/2" thickness

② Metallic Pipe: A) Steel Pipe - 8" diam. (or smaller) Sch. 10 (or heavier) steel pipe.
B) Conduit - 4" diam. (or smaller) EMT or steel conduit
C) Copper Tubing - 4" diam. (or smaller) Type L (or heavier) copper tubing.
D) Copper Pipe - 4" diam. (or smaller) Regular (or heavier) copper pipe.
The annular space shall be min. 1/2" to max. 3-3/8" within the firestop system.

③ Packing Material - Min. 3-1/2" thick mineral wool (min. 6.0 pcf) insulation, firmly packed into opening as a permanent form.

④ FYRE-SIL or FYRE-SIL S/L - Min. 1/2" thickness of sealant applied within annulus, flush with top of floor surface or with both sides of the wall assembly.

NOTE: Apply FYRE-SIL S/L to Floor Applications Only.

Project:
Location:
Installer:
Signature:

The Tremco products used above have been tested in accordance with the following:
• ASTM E814 (UL1479) Standard Test Method for Through Penetration Firestopping.

Date: 9/16/96 | Drawing: TR-1179
Approved by: J. Pitcole

The above described assembly has been tested and is based on both past and anticipated performance criteria. Tremco shall not be liable for any damages, direct or consequential, resulting from use of this material or design. Tremco shall only be responsible for replacing material found to be defective.

WL 2176

Classified UL System

1 Hour Fire Rated Through Penetration Firestop for Single Plastic Pipe through Gypsum Walls using TREMstop IA.

TREMCO
3735 Green Rd.
Beachwood, OH, 44122

Drawing not to scale

F-Rating = 1 Hr.
T-Rating = 0 Hr.

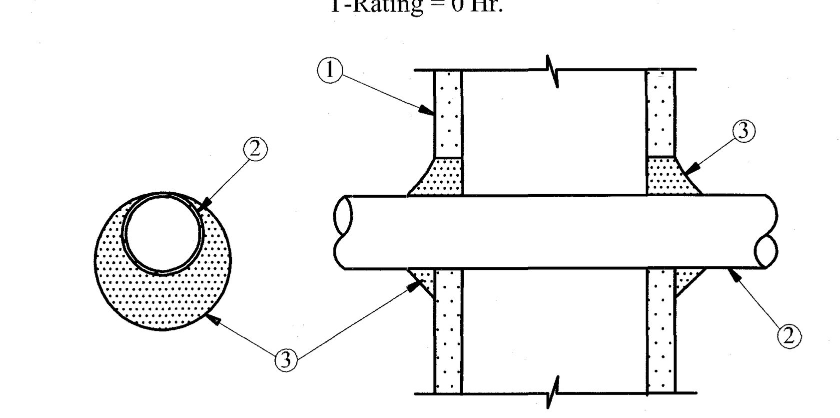

① Pre-Rated Gypsum Wallboard/Stud Wall Assembly

② Plastic Pipe - Nom 2" diam. (or smaller) Sch. 40 solid core PVC or SDR 17 CPVC pipe for use in closed or open piping systems.
The annular space shall be min. 0" to max. 7/8" within the firestop system.

③ TREMstop IA - Min. 1/2" thickness of sealant applied within opening. Additional sealant to be installed such that a min. 1/4" crown is formed around the penetrating item.

Project:
Location:
Installer:
Signature:

The Tremco products used above have been tested in accordance with the following:
• ASTM E814 (UL1479) Standard Test Method for Through Penetration Firestopping.

Date: 12/08/98 | Drawing: TW-2176
Approved by: M. Starr

The above described assembly has been tested and is based on both past and anticipated performance criteria. Tremco shall not be liable for any damages, direct or consequential, resulting from use of this material or design. Tremco shall only be responsible for replacing material found to be defective.

WL 2082

Classified UL System

1and 2 Hour Fire Rated Through Penetration Firestop for Single Plastic Pipe through Gypsum Walls using FYRE-CAN SLEEVE.

TREMCO
3735 Green Rd.
Beachwood, OH, 44122

Drawing not to scale

F-Rating = 1 and 2 Hr.
T-Rating = 1/4 Hr.

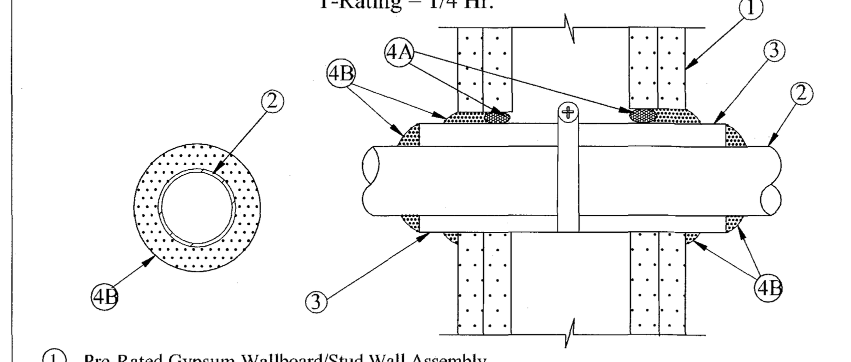

① Pre-Rated Gypsum Wallboard/Stud Wall Assembly

② Plastic Pipe - A) Nom. 4" diam. (or smaller) Sch. 40 solid or cellular-core PVC pipe for use in open or closed piping systems.
B) Nom. 4" diam. (or smaller) Sch. 40 solid or cellular-core ABS pipe for use in open or closed piping systems.

③ FYRE-CAN SLEEVE - Intumescent device installed around pipe and tightened with a hose clamp. Prior to installation, the gypsum wall is notched on one side to allow insertion of the device with the hose clamp into the opening. See table below for system specifics:

Nom. Pipe Diam. (in.)	Device Size	Diam. of Opening (in.)	Annular Space (in.)
1-1/2	TS1.5	3	1/2
2	TS2	3-1/2	1/2
3	TS3	5	1/2
4	TS4	6-1/2	1/2

4A Packing Material (optional)- Foam backer rod firmly packed into opening as a permanent form.

4B TREMstop IA - Min. 1/2" bead of sealant applied within annulus, flush with both sides of wall. Additional material installed such that a min. 5/8" crown is formed at the sleeve/wall and sleeve/pipe interfaces.

Project:
Location:
Installer:
Signature:

The Tremco products used above have been tested in accordance with the following:
• ASTM E814 (UL1479) Standard Test Method for Through Penetration Firestopping.

Date: 8/31/98 | Drawing: TW-2082
Approved by: M. Starr

The above described assembly has been tested and is based on both past and anticipated performance criteria. Tremco shall not be liable for any damages, direct or consequential, resulting from use of this material or design. Tremco shall only be responsible for replacing material found to be defective.

WL 2158

Classified UL System

1 or 2 Hour Fire Rated Through Penetration Firestop for Single Plastic Pipe through Gypsum Walls using TREMstop IA.

TREMCO
3735 Green Rd.
Beachwood, OH, 44122

Drawing not to scale

F-Rating = 1 and 2 Hr.
T-Rating = 1 and 1-3/4 Hr.

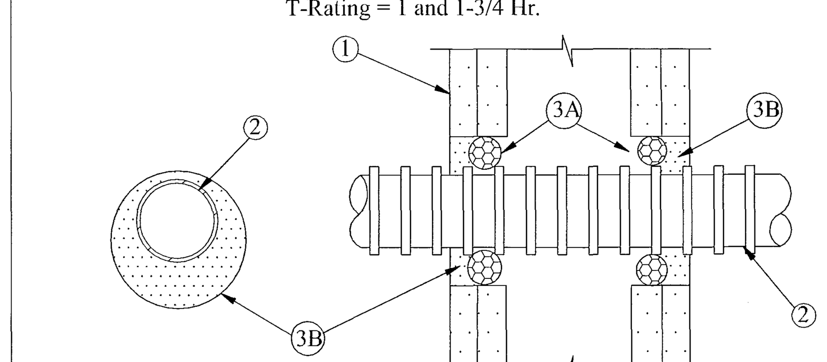

① Pre-Rated Gypsum Wallboard/Stud Wall Assembly

② Electrical Nonmetallic Tubing (ENT)- Nom. 1" diam. (or smaller) corrugated wall ENT constructed of PVC. Annular space from min. 1/4" to max. 3/8".

3A Packing Material (optional)- In 2 hr. wall, foam backer rod firmly packed into opening as a permanent form.

3B TREMstop IA- Min. 1/2" thickness sealant applied within annulus, flush with both sides of wall assembly.

Project:
Location:
Installer:
Signature:

The Tremco products used above have been tested in accordance with the following:
• ASTM E814 (UL1479) Standard Test Method for Through Penetration Firestopping.

Date: 9/01/98 | Drawing: TW-2158
Approved by: M. Starr

The above described assembly has been tested and is based on both past and anticipated performance criteria. Tremco shall not be liable for any damages, direct or consequential, resulting from use of this material or design. Tremco shall only be responsible for replacing material found to be defective.

WL 1113

Classified UL System

1 or 2 Hour Fire Rated Through Penetration Firestop for Single Metallic Pipe through Gypsum Walls using TREMstop IA.

TREMCO
3735 Green Rd.
Beachwood, OH, 44122

Drawing not to scale

F-Rating = 1 and 2 Hr.
T-Rating = 0 Hr.

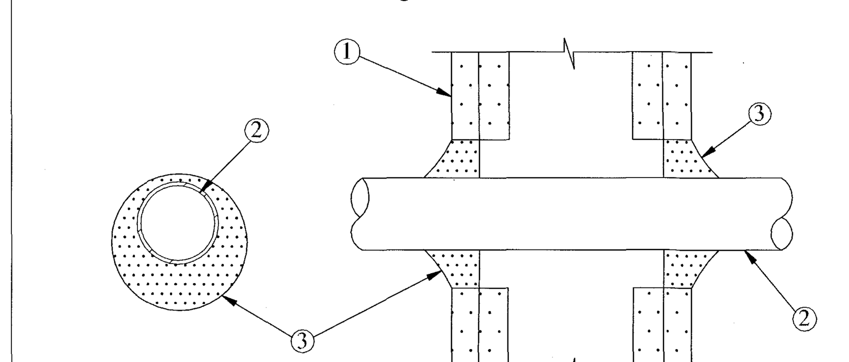

① Pre-Rated Gypsum Wallboard/Stud Wall Assembly

② Metallic Pipe - A) Steel Pipe - 4" diam. (or smaller) Sch. 40 (or heavier) steel pipe.
B) Iron Pipe - 4" diam. (or smaller) cast or ductile iron pipe.
C) Conduit - 4" diam. (or smaller) EMT or rigid steel conduit.
D) Copper Tubing - 4" diam. (or smaller) Type L (or heavier) copper tubing.
E) Copper Pipe - 4" diam. (or smaller) Regular (or heavier) copper pipe.
The annular space shall be min. 1/4" to max. 5/8" within the firestop system.

③ TREMstop IA - Min. 1/2" thickness of sealant applied within opening. Additional sealant to be installed such that a min. 1/4" crown is formed around the penetrating item.

WL 2125

Classified UL System

2 Hour Fire Rated Through Penetration Firestop for Single Plastic Pipe through Gypsum Walls using TREMstop WS and TREMstop MCR.

3735 Green Rd.
Beachwood, OH, 44122

Drawing not to scale

F-Rating = 2 Hr.
T-Rating = 1-1/2 Hr.

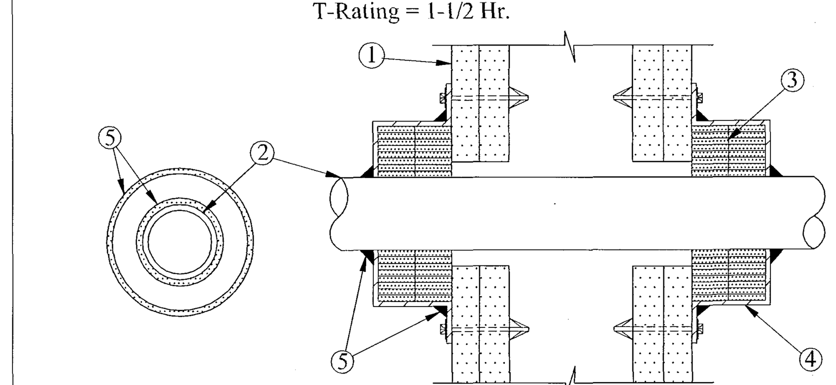

① Pre-Rated Gypsum Wallboard/Stud Wall Assembly

② Plastic Pipe - Nom. 6" diam. (or smaller) Sch. 40 PVC pipe for use in open or closed piping systems. A max. annular space of 3/8" is required within the system.

③ TREMstop WS - Two stacks of intumescent wrap strips, continuously wrapped around the outer circumference of the pipe eight times on both sides of wall.

④ TREMstop MCR - Prefabricated steel collar wrapped over the wrap strips (Item 3) and mechanically fastened to both sides of the wall assembly.

⑤ TREMstop WBM - Min. 1/4" thickness of sealant applied at the interface of the wall and collar, and the interface of the collar and pipe. Sealant applied on both sides of wall.

FEB 05 2014

STEVEN FELLER P.E., PL
FLORIDA P.E. Reg. # 22046
Certificate of Authorization # 00003427
500 N.E. THIRD AVENUE
FORT LAUDERDALE, FLORIDA 33301
PH: 954.467.1402 FAX: 954.467.5752
e-mail: fellerpe@fellerpe.com
JOB # 13153

STEVEN M. FELLER LICENSE No 22046 STATE OF FLORIDA PROFESSIONAL ENGINEER

APPROVED MIAMI BEACH FIRE DEPARTMENT

HADDON HALL
1500 COLLINS AVE

MIAMI BEACH, FL

KEYPLAN N.T.S.

REVISIONS

NO.	DESCRIPTION	ISSUE DATE

MTCI PRIVATE PROVIDER SERVICES, LLC
Construction Plans Review, Inspections, Testing & Consulting

	REVIEWER INITIALS	DATE REVIEWED
BUILDING		
STRUCTURAL		
MECHANICAL		
ELECTRICAL		
PLUMBING	DG	11/10/14
SITE CIVIL		

PERMIT SET

NORTH SEAL

Jonathan Cardello
Lic. # AR93391

ADD Inc Architecture Interiors Planning

One Biscayne Tower
Suite 1670
Two South
Biscayne Boulevard
Miami, Fl 33131
T. 305.482.8700
F. 305.482.8770
www.addinc.com
Lic. # AA26001507

Boston Miami

JOB NUMBER:	13036.00
CHECKED BY:	SF
ISSUE DATE:	JANUARY 24, 2014
SCALE:	AS NOTED

SHEET TITLE

PLUMBING DETAILS

SHEET NUMBER

P4.02

COPYRIGHT ADD INC 2011

File: E:\Haddon Hall\P4.02 Plumbing Details.dwg | Layout: Layout1
User: | Date: Tuesday, February 4 2014 01:53:02 PM

FIRE PROTECTION DRAWING INDEX	
DWG. No.	DRAWING DESCRIPTION
	SITE PLAN - (SCALE: 3/32"=1'-0")
FP0.01	SITE PLAN & DRAWING INDEX – FIRE PROTECTION
	FLOOR PLANS - (SCALE: 3/32"=1'-0")
FP1.00	BASEMENT – FIRE PROTECTION
FP1.01	GROUND FLOOR PLAN – FIRE PROTECTION
FP1.02	SECOND FLOOR PLAN – FIRE PROTECTION
FP1.03	THIRD FLOOR PLAN – FIRE PROTECTION
FP1.04	ROOF PLAN – FIRE PROTECTION
	FLOOR PLANS - (SCALE: 1/4"=1'-0")
FP2.01	ENLARGED UNITS FIRST FLOOR – FIRE PROTECTION
FP2.02	ENLARGED UNITS FIRST FLOOR – FIRE PROTECTION
FP2.03	ENLARGED UNITS FIRST FLOOR – FIRE PROTECTION
FP2.04	ENLARGED UNITS FIRST FLOOR – FIRE PROTECTION
FP2.05	ENLARGED UNITS 2ND FLOOR – FIRE PROTECTION
FP2.06	ENLARGED UNITS 2ND FLOOR – FIRE PROTECTION
FP2.07	ENLARGED UNITS 2ND & 3RD FLOOR – FIRE PROTECTION
FP2.08	ENLARGED UNITS 2ND & 3RD FLOOR – FIRE PROTECTION
FP2.09	ENLARGED UNITS 2ND & 3RD FLOOR – FIRE PROTECTION
	DETAILS - (SCALE: N.T.S.)
FP5.01	FIRE PROTECTION – DETAILS & NOTES

POOL

EXISTING FIRE HYDRANT, FIELD VERIFY EXACT LOCATION

NEW FIRE DEPARTMENT CONNECTION TO BE WITHIN 100' OF FIRE HYDRANT. COORDINATE WITH CIVIL DRAWINGS LANDSCAPING SHALL NOT OBSTRUCT

POOL SUITES EXISTING BUILDING TO BE PARTIALLY DEMOLISHED. PROVIDE A NEW SPRINKLER SYSTEM IN NEW BUILDING (BUILDING UNDER 30' HIGH TO HIGHEST OCCUPIED FLOOR)SUPPLIED BY A NEW FIRE SERVICE/BACKFLOW

POOL SUITES
AREA "C"

6" CONNECT TO NEW SPRINKLER SYSTEM

EQUIP. ROOM | ELEV.

CAMPTON APARTMENTS BUILDING TO BE A SPRINKLERED BUILDING NO STANDPIPES (BUILDING UNDER 30' HIGH)

CAMPTON APARTMENTS
AREA "B"

6" CONNECT TO NEW SPRINKLER SYSTEM COORDINATE EXACT LOCATION INTO BASEMENT

4" SEE BASEMENT

4" SEE BASEMENT

FIELD LOCATE EXACT LOCATION OF EXISTING SPRINKLER SYSTEM SUPPLY, DISCONNECT & CONNECT TO NEW 6" FIRE SERVICE

UP SEE LEVEL 1

INACCESSIBLE CRAWL SPACE
NO SPRINKLERS

HADDON HALL BUILDING CONTAINS AN EXISTING SPRINKLER SYSTEM AND A MANUAL WET STANDPIPE SYSTEM (BUILDING OVER 30' HIGH) SUPPLIED FROM A NEW FIRE SERVICE/BACKFLOW

HADDON
HALL
AREA "A"

FIELD VERIFY EXACT LOCATION OF EXISTING SPRINKLER SYSTEM SUPPLY.

UP SEE LEVEL 1

INACCESSIBLE CRAWL SPACE
NO SPRINKLERS

NEW FIRE DEPARTMENT CONNECTION TO BE WITHIN 100' OF FIRE HYDRANT. COORDINATE WITH CIVIL DRAWINGS LANDSCAPING SHALL NOT OBSTRUCT

NEW 6" POST INDICATOR VALVE WITH TAMPER SWITCH. (P.I.V. IS PROVIDED AS BACKFLOW IS TO BE CONCEALED)

NEW 6" BACKFLOW PREVENTER WITH TAMPER SWITCHES VERIFY EXACT LOCATION ON CIVIL DRAWINGS (BACKFLOW TO BE CONCEALED)

EXISTING 4" SERVING FIRE TO BE REMOVED/REPIPED TO FIELD LOCATE EXACT LOCATIONS NEW 6" FIRE SERVICE (COORDINATION REQUIRED)

REMOVE EXISTING FIRE DEPARTMENT CONNECTION

FIRE PROTECTION SITE PLAN

SCALE:3/32"=1'-0"

HADDON HALL
1500 COLLINS AVE

MIAMI BEACH, FL

KEYPLAN N.T.S.

REVISIONS		
NO.	DESCRIPTION	ISSUE DATE
1	PROGRESS TO 100% CD SET	02/07/14
4	FIRE REVIEW COMMENTS	04/04/14
7	POOL SUITES WALLS	04/04/14
12	FIRE REVIEW COMMENTS	08/21/14

100% CONSTRUCTION DOCUMENT SET

NORTH

SEAL

Jonathan Cardello
Lic. # AR93391

ADD Inc Architecture Interiors Planning

One Biscayne Tower
Suite 1670
Two South
Biscayne Boulevard
Miami, Fl 33131
T. 305.482.8700
F. 305.482.8770
www.addinc.com
Lic. # AA26001507

Boston Miami

MTCI
PRIVATE PROVIDER SERVICES, LLC
Florida Plans Review, Inspection, Testing & Certification

	REVIEWER INITIALS	DATE REVIEWED
BUILDING		
STRUCTURAL		
MECHANICAL		
ELECTRICAL		
PLUMBING		
SITE CIVIL		

JOB NUMBER: 13036.00

CHECKED BY:

ISSUE DATE: MARCH 14, 2014

SCALE: AS NOTED

SHEET TITLE

FIRE PROTECTION SITE PLAN

SEP 04 2014

STEVEN M. FELLER LICENSE No 22046 STATE OF FLORIDA PROFESSIONAL ENGINEER

STEVEN FELLER P.E., PL
FLORIDA P.E. Reg. # 22046
Certificate of Authorization # 00003427
500 N.E. THIRD AVENUE
FORT LAUDERDALE, FLORIDA 33301
PH: 954.467.1402 FAX: 954.467.5752
e-mail: fellerpe@fellerpe.com
JOB # 13153

SHEET NUMBER

FP0.01

COPYRIGHT ADD INC 2011

[file: F:\13000\13036.00\Revit\Revit_Files\Fire Protection\FP0.01 Site Plan.rvt | Plotted: 09/04/2014 - 09:18:51 PM | Plot By: Pablo Rodriguez | Layout: Layout1]

EXISTING PUMP ROOM TO REMAIN

EXISTING POOL TO REMAIN

POOL SUITES BUILDING 'C'

INACCESSIBLE CRAWL SPACE NO SPRINKLERS

EXISTING CRAWL SPACE TO REMAIN

INACCESSIBLE

6" SEE SITE PLAN

6" U.G. COORDINATE STUB INTO BASMENT

4" CONTROL VALVE ASSEMBLY FOR BASEMENT AND GROUND FLOOR

4" UP SEE LEVEL GR.FL.

STORAGE

ELEC.

TRANS. SPACE

SCOPE OF WORK:
ADD NEW SPRINKLER SYSTEM TO EXISTING BUILDING

CAMPTON APARTMENTS BUILDING 'B'

212° DRY PENDENT SPRINKLERS

CONNECT TO SYSTEM ABOVE. (TYPICAL)

4" UNDERGROUND SEE SITE PLAN

SCOPE OF WORK:
MODIFY EXISTING SPRINKLER SYSTEM. ADD & OR RELOCATE SPRINKLERS TO NEW FLOOR PLANS

HADDON HALL BUILDING 'A'

CLOSET

CORRIDOR

LINEN ROOM

LAUNDRY ROOM

CONNECT TO EXISTING WITH NEW STEEL PIPE. FIELD VERIFY EXACT LOCATION OF EXISTING SYSTEM. (TYPICAL)

SPRINKLER HEAD LEGEND

- EXISTING SPRINKLER HEADS TO REMAIN
- EXISTING HEAD REMOVE & PLUG OR RELOCATE WITH NEW SPRINKLER HEAD
- NEW SPRINKLER HEADS
- EXISTING BRANCH LINE
- EXISTING BRANCH LINE TO BE REMOVED
- NEW PIPING

MAY 09 2014

STEVEN M. FELLER LICENSE NO. 22046 STATE OF FLORIDA PROFESSIONAL ENGINEER

APPROVED MIAMI BEACH FIRE DEPARTMENT

BASEMENT FIRE PROTECTION PLAN

SCALE: 3/32"=1'-0"

STEVEN FELLER P.E.,PL
FLORIDA P.E. Reg. # 22046
Certificate of Authorization # 00003427
500 N.E. THIRD AVENUE
FORT LAUDERDALE, FLORIDA 33301
PH: 954.467.1402 FAX: 954.467.5752
e-mail: fellerpe@fellerpe.com
JOB # 13153

HADDON HALL
1500 COLLINS AVE

MIAMI BEACH, FL

KEYPLAN N.T.S.

REVISIONS

NO.	DESCRIPTION	ISSUE DATE
1	PROGRESS TO 100% CD SET	02/07/14
4	FIRE REVIEW COMMENTS	04/04/14

MTCI
PRIVATE PROVIDER SERVICES, LLC
Construction Plans Review - Inspections - Consulting

	REVIEWER INITIALS	DATE REVIEWED
BUILDING		
STRUCTURAL		
MECHANICAL		
ELECTRICAL		
PLUMBING		
SITE CIVIL		

100% CONSTRUCTION DOCUMENT SET

NORTH SEAL

Jonathan Cardello
Lic. # AR93391

ADD Inc Architecture Interiors Planning

One Biscayne Tower
Suite 1670
Two South
Biscayne Boulevard
Miami, Fl 33131
T. 305.482.8700
F. 305.482.8770
www.addinc.com
Lic. # AA26001507

Boston Miami

JOB NUMBER: 13036.00
CHECKED BY:
ISSUE DATE: MARCH 14, 2014
SCALE: AS NOTED

SHEET TITLE

BASEMENT FIRE PROTECTION PLAN

SHEET NUMBER

FP1.00

COPYRIGHT ADD INC 2011

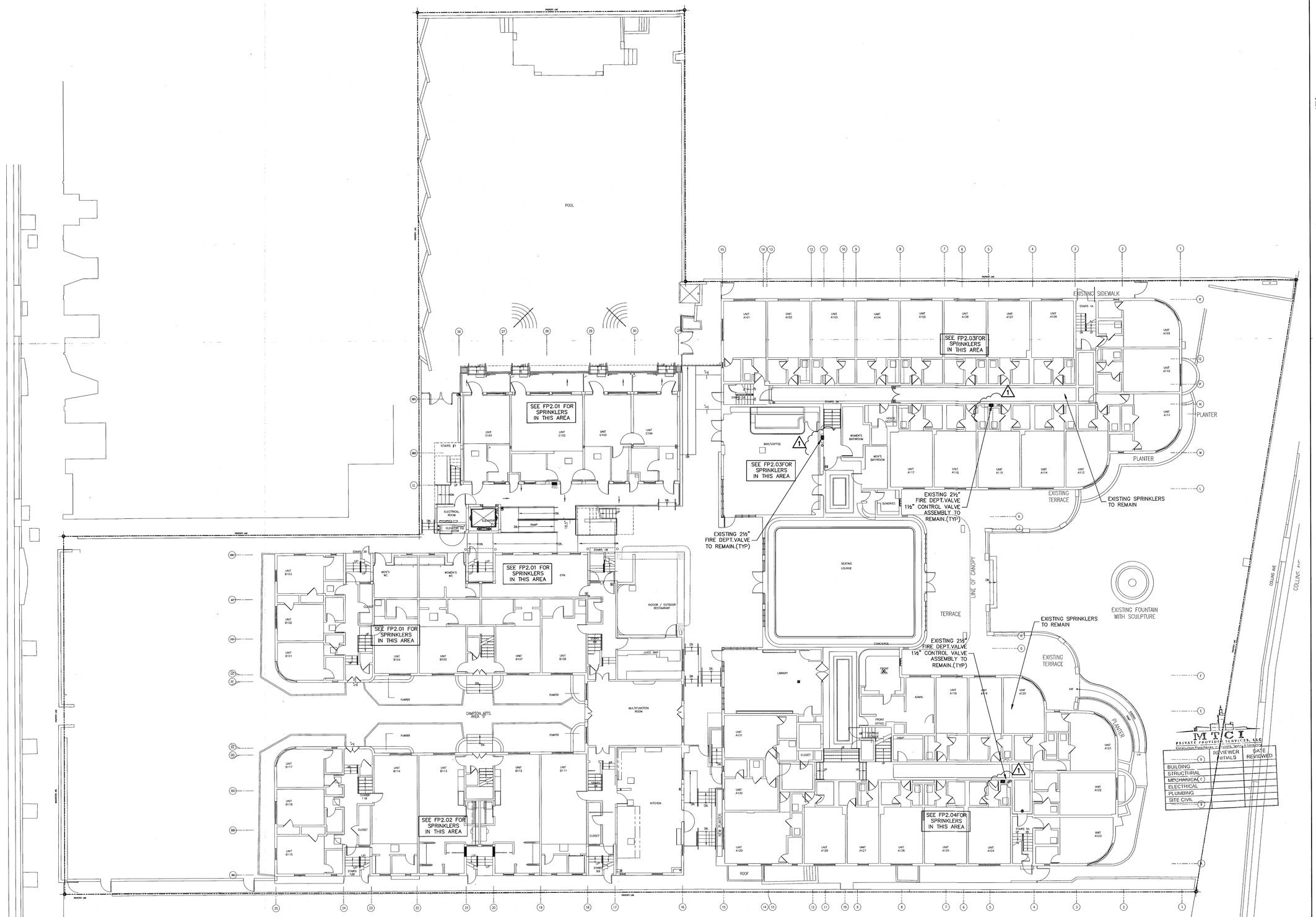

SPRINKLER HEAD LEGEND	
	EXISTING SPRINKLER HEADS TO REMAIN
	EXISTING HEAD REMOVE & PLUG OR RELOCATE WITH NEW SPRINKLER HEAD
	NEW SPRINKLER HEADS
	EXISTING BRANCH LINE
	EXISTING BRANCH LINE TO BE REMOVED
	NEW PIPING

GROUND FLOOR FIRE PROTECTION PLAN

SCALE:3/32"=1'-0"

HADDON HALL
1500 COLLINS AVE

MIAMI BEACH, FL

KEYPLAN N.T.S.

REVISIONS

NO.	DESCRIPTION	ISSUE DATE
1	PROGRESS TO 100% CD SET	02/07/14

100% CONSTRUCTION DOCUMENT SET

NORTH SEAL

Jonathan Cardello
Lic. # AR93391

ADD Inc Architecture Interiors Planning

One Biscayne Tower
Suite 1670
Two South
Biscayne Boulevard
Miami, Fl 33131
T. 305.482.8700
F. 305.482.8770
www.addinc.com
Lic. # AA26001507

Boston Miami

JOB NUMBER:	13036.00
CHECKED BY:	
ISSUE DATE:	MARCH 14, 2014
SCALE:	AS NOTED

SHEET TITLE

GROUND FLOOR
FIRE PROTECTION PLAN

SHEET NUMBER

FP1.01

COPYRIGHT ADD INC 2011

MTCI
PRIVATE PROVIDER SERVICES, LLC
Construction Plans Review, Inspection, Testing & Consulting

	REVIEWER INITIALS	DATE REVIEWED
BUILDING		
STRUCTURAL		
MECHANICAL		
ELECTRICAL		
PLUMBING		
SITE CIVIL		

MAY 09 2014

STEVEN M. FELLER
LICENSE
No 22046
STATE OF FLORIDA
PROFESSIONAL ENGINEER

APPROVED
MIAMI BEACH
FIRE DEPARTMENT

STEVEN FELLER P.E.,PL
FLORIDA P.E. Reg. # 22046
Certificate of Authorization # 00003427
500 N.E. THIRD AVENUE
FORT LAUDERDALE, FLORIDA 33301
PH: 954.467.1402 FAX: 954.467.5752
e-mail: fellerpe@fellerpe.com
JOB # 13153

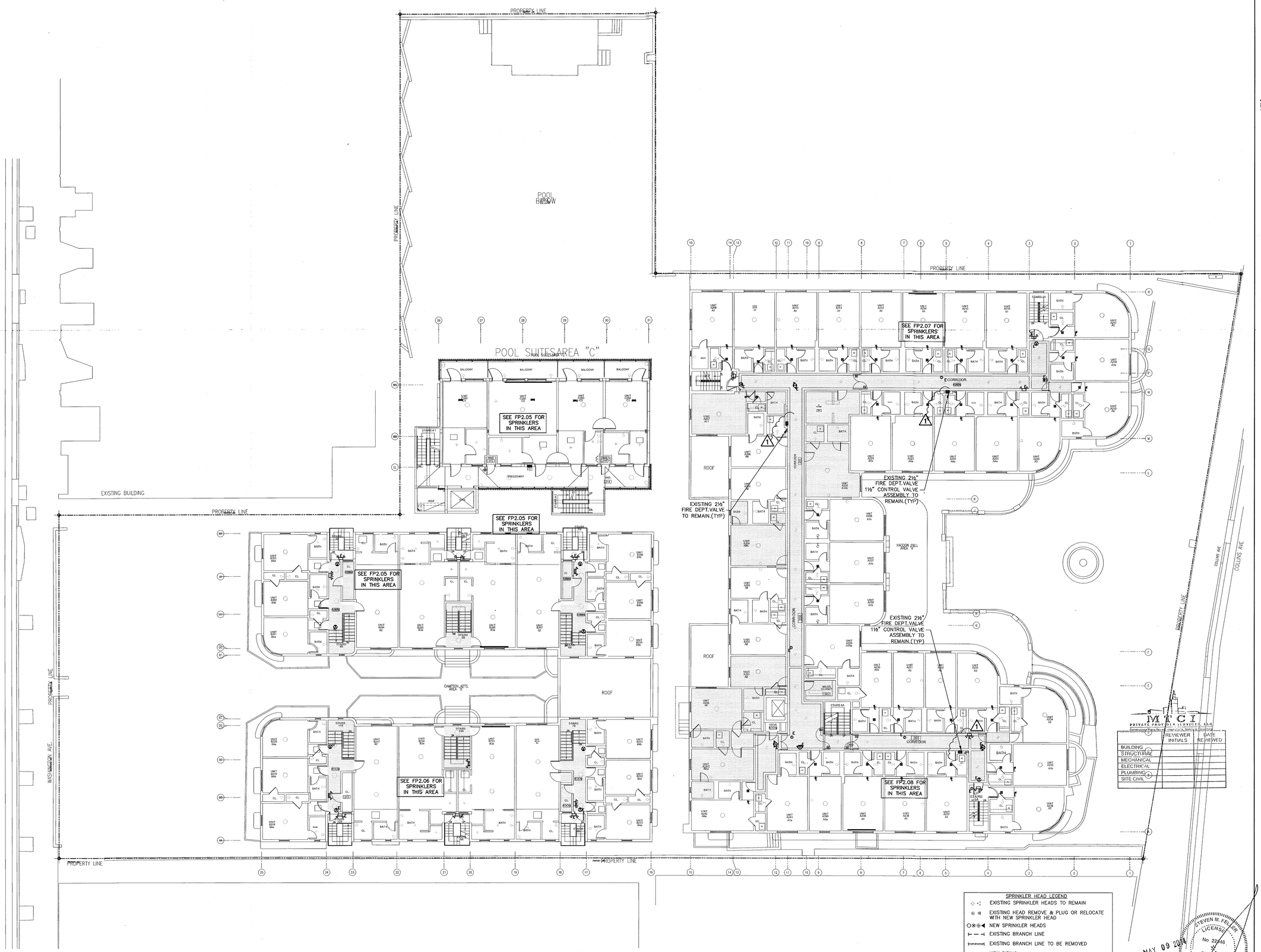

SECOND FLOOR FIRE PROTECTION PLAN

SCALE:3/32"=1'-0"

HADDON HALL
1500 COLLINS AVE

MIAMI BEACH, FL

KEYPLAN N.T.S.

REVISIONS

NO.	DESCRIPTION	ISSUE DATE
1	PROGRESS TO 100% CD SET	02/07/14

100% CONSTRUCTION DOCUMENT SET

NORTH SEAL

Jonathan Cardello
Lic. # AR93391

ADD Inc Architecture Interiors Planning

One Biscayne Tower
Suite 1670
Two South
Biscayne Boulevard
Miami, Fl 33131
T. 305.482.8700
F. 305.482.8770
www.addinc.com
Lic. # AA26001507

Boston Miami

	REVIEWER INITIALS	DATE REVIEWED
BUILDING		
STRUCTURAL		
MECHANICAL		
ELECTRICAL		
PLUMBING		
SITE CIVIL		

JOB NUMBER: 13036.00

CHECKED BY:

ISSUE DATE: MARCH 14, 2014

SCALE: AS NOTED

SHEET TITLE

SECOND FLOOR
FIRE PROTECTION PLAN

STEVEN M. FELLER LICENSE No 22046 STATE OF FLORIDA PROFESSIONAL ENGINEER

MAY 09 2014

APPROVED MIAMI BEACH FIRE DEPARTMENT

STEVEN FELLER P.E.,PL
FLORIDA P.E. Reg. # 22046
Certificate of Authorization # 00003427
500 N.E. THIRD AVENUE
FORT LAUDERDALE, FLORIDA 33301
PH: 954.467.1402 FAX: 954.467.5752
e-mail: fellerpe@fellerpe.com
JOB # 13153

SHEET NUMBER

FP1.02

COPYRIGHT ADD INC 2011

File: P:\Haddon Hall\REVIT\02 Second Floor.rvt | Layout: Layout1
User: Guy Martinez | Tuesday, May 6 2014 01:56:16 PM

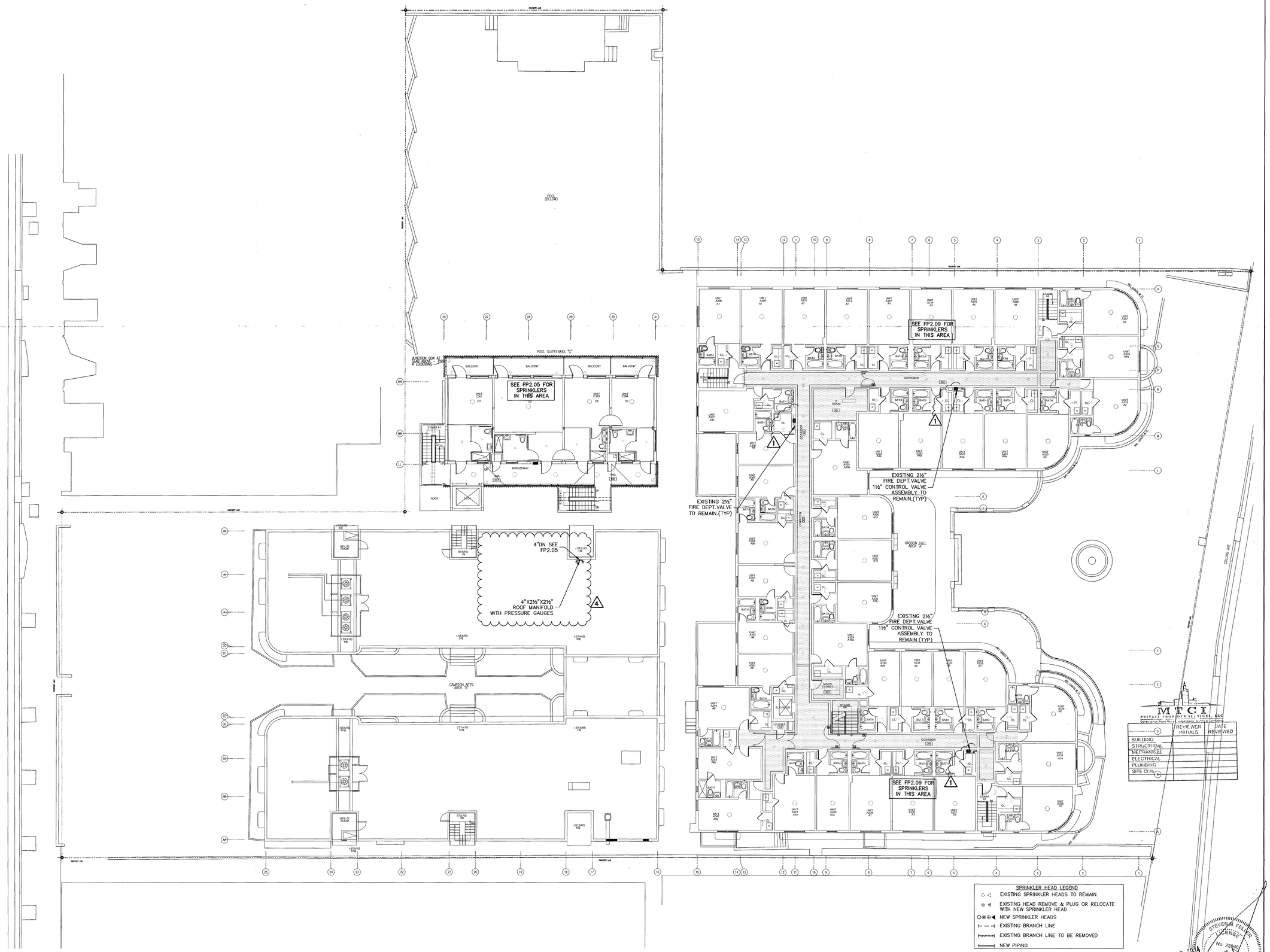

THIRD FLOOR FIRE PROTECTION PLAN

SCALE:3/32"=1'-0"

SPRINKLER HEAD LEGEND	
☼ ☼	EXISTING SPRINKLER HEADS TO REMAIN
⊗ ⊗	EXISTING HEAD REMOVE & PLUG OR RELOCATE WITH NEW SPRINKLER HEAD
○ ⊗ ⊕ ◀	NEW SPRINKLER HEADS
⊢ — ⊣	EXISTING BRANCH LINE
⊢ - - - ⊣	EXISTING BRANCH LINE TO BE REMOVED
⊢———	NEW PIPING

HADDON HALL
1500 COLLINS AVE

MIAMI BEACH, FL

KEYPLAN N.T.S.

REVISIONS

NO.	DESCRIPTION	ISSUE DATE
1	PROGRESS TO 100% CD SET	02/07/14
4	FIRE REVIEW COMMENTS	04/04/14

100% CONSTRUCTION DOCUMENT SET

NORTH SEAL

Jonathan Cardello
Lic. # AR93391

ADD Inc Architecture Interiors Planning

One Biscayne Tower
Suite 1670
Two South
Biscayne Boulevard
Miami, Fl 33131
T. 305.482.8700
F. 305.482.8770
www.addinc.com
Lic. # AA26001507

Boston Miami

MTCI PRIVATE PROVIDER SERVICES, LLC

	REVIEWER INITIALS	DATE REVIEWED
BUILDING		
STRUCTURAL		
MECHANICAL		
ELECTRICAL		
PLUMBING		
SITE CIVIL		

JOB NUMBER: 13036.00

CHECKED BY:

ISSUE DATE: MARCH 14, 2014

SCALE: AS NOTED

SHEET TITLE

THIRD FLOOR
FIRE PROTECTION PLAN

STEVEN A. FELLER LICENSE No 22046 STATE OF FLORIDA PROFESSIONAL ENGINEER

MAY 09 2014

APPROVED MIAMI BEACH FIRE DEPARTMENT

STEVEN FELLER P.E.,PL
FLORIDA P.E. Reg. # 22046
Certificate of Authorization # 00003427
500 N.E. THIRD AVENUE
FORT LAUDERDALE, FLORIDA 33301
PH: 954.467.1402 FAX: 954.467.3752
e-mail: fellerpe@fellerpe.com
JOB # 13153

SHEET NUMBER

FP1.03

COPYRIGHT ADD INC 2011

File: E:\Projects_MEP\FP\13036.00 Haddon Plaza Bldg\13036.00 FP.dwg Layout: Layout1
Date: Friday, May 9, 2014 - 07:55:16 PM
User: Guy Marshall

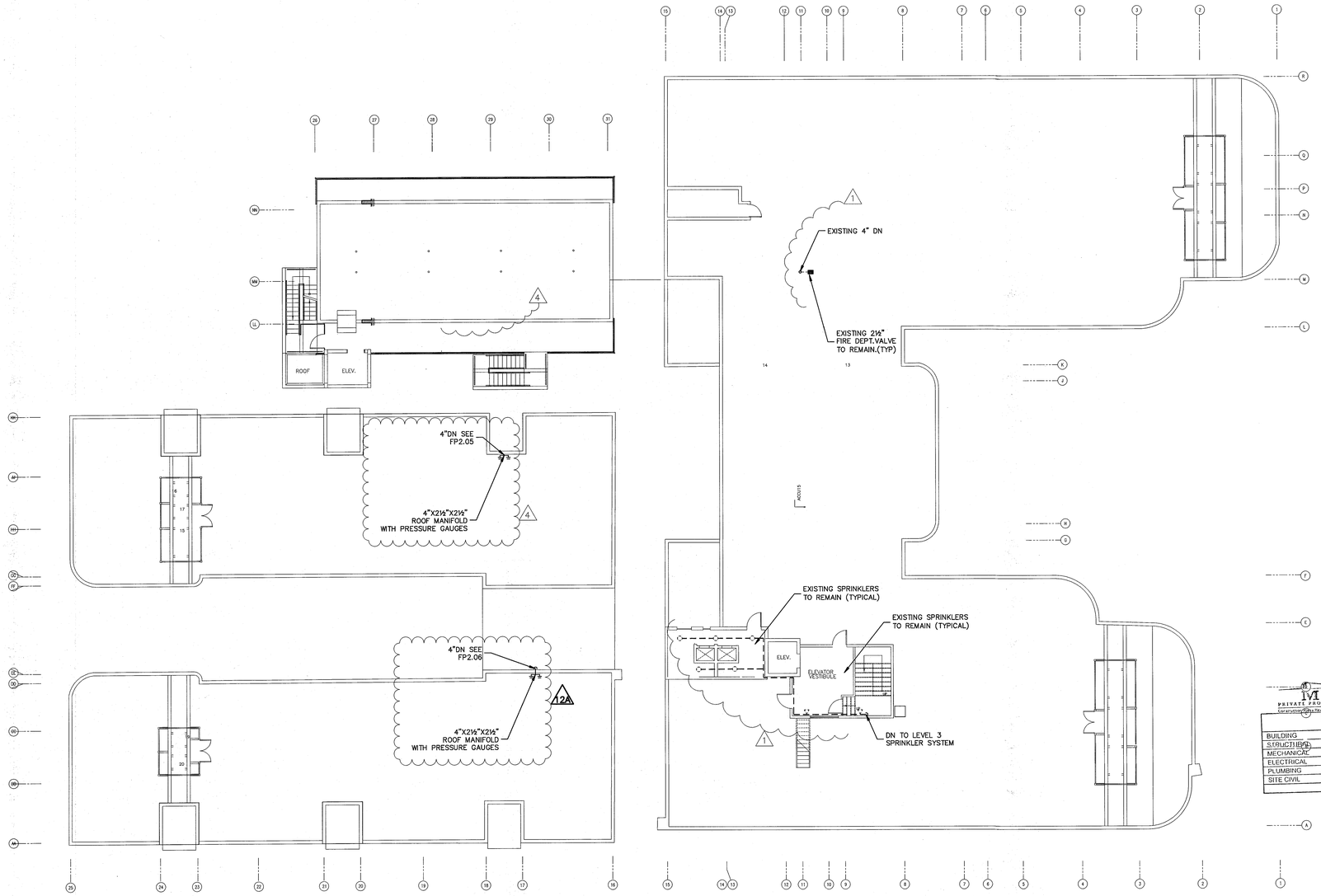

SPRINKLER HEAD LEGEND

- EXISTING SPRINKLER HEADS TO REMAIN
- EXISTING HEAD REMOVE & PLUG OR RELOCATE WITH NEW SPRINKLER HEAD
- NEW SPRINKLER HEADS
- EXISTING BRANCH LINE
- EXISTING BRANCH LINE TO BE REMOVED
- NEW PIPING

FIRE PROTECTION ROOF PLAN

SCALE:3/32"=1'-0"

HADDON HALL
1500 COLLINS AVE.

MIAMI BEACH, FL

KEYPLAN N.T.S.

REVISIONS

NO.	DESCRIPTION	ISSUE DATE
1	PROGRESS TO 100% CD SET	02/07/14
4	FIRE REVIEW COMMENTS	04/04/14
12A	FIRE DEPARTMENT PERMIT COMMENTS	09/29/14

100% CONSTRUCTION DOCUMENT SET

NORTH SEAL

Jonathan Cardello
Lic. # AR93391

ADD Inc Architecture Interiors Planning

One Biscayne Tower
Suite 1670
Two South
Biscayne Boulevard
Miami, Fl 33131
T. 305.482.8700
F. 305.482.8770
www.addinc.com
Lic. # AA26001507

Boston Miami

MTCI PRIVATE PROVIDER SERVICES, LLC
Comprehensive Plan Review, Code Training, Auditing & Consulting

	REVIEWER INITIALS	DATE REVIEWED
BUILDING		
STRUCTURAL		
MECHANICAL		
ELECTRICAL		
PLUMBING		
SITE CIVIL		

JOB NUMBER: 13036.00

CHECKED BY:

ISSUE DATE: MARCH 14, 2014

SCALE: AS NOTED

SHEET TITLE

FIRE PROTECTION ROOF PLAN

SEP 29 2014
STEVEN M. FELLER LICENSE NO. 22046 STATE OF FLORIDA PROFESSIONAL ENGINEER

STEVEN FELLER P.E.,PL
FLORIDA P.E. Reg. # 22046
Certificate of Authorization # 00003427
550 N.E. THIRD AVENUE
FORT LAUDERDALE, FLORIDA 33301
PH: 954.467.1402 FAX: 954.467.3752
e-mail: fellerpe@fellerpe.com
JOB # 13153

APPROVED MIAMI BEACH FIRE DEPARTMENT

SHEET NUMBER

FP1.04

COPYRIGHT ADD INC 2011

Date: Sep 29, 2014 - 08:48:17 PM Operator: Monday, September 29, 2014 - 08:48:17 PM

SPRINKLER HEAD LEGEND

- EXISTING SPRINKLER HEADS TO REMAIN
- EXISTING HEAD REMOVE & PLUG OR RELOCATE WITH NEW SPRINKLER HEAD
- NEW SPRINKLER HEADS
- EXISTING BRANCH LINE
- EXISTING BRANCH LINE TO BE REMOVED
- NEW PIPING

DEMO EXISTING SPRINKLER SYSTEM PROVIDE NEW AS SHOWN (TYPICAL)

2" DRAIN RISER REFER TO PLUMBING DRAWINGS FOR CON'T

BREEZEWAY 4" RISER WITH 4" CONTROL VALVE ASSEMBLY BEHIND ACCESS PANEL (TYPICAL)

AT GROUND FLOOR CONNECT TO NEW FIRE SERVICE SEE FP1.01

CORROSION RESISTANT SPRINKLERS OUTDOORS (TYPICAL)

4" UP SEE LEVEL 2

4" DN SEE BASEMENT PLAN

212° DRY PEND HEAD

EXISTING HISTORICAL CEILING TO REMAIN

SEE PLUMBING

UNIT B101 B4a
UNIT B102 B4b
UNIT B103 B4a
UNIT B104 B1
UNIT B105 B1a
UNIT B106 B1a
UNIT C101 C1
UNIT C102 C2
UNIT C103 C3
UNIT C104 C1

STAIRS #1
STAIRS 2B
STAIRS 3B
STAIRS 5B
STAIRS 6B
STAIRS # 2
STAIRS 1B

MEN'S WC 131
WOMEN'S WC 130
ELEC. 138
ELEV. CTRL. 141
ELEV. NO.1
CORRIDOR 133
GYM 128
KITCHEN PREP 129
INDOOR OUTDOOR RESTAURANT 124
COURTY 123
KITCHEN 122
CORRIDOR 120
STOR. 121
BATH 45 SQ.FT
1.00 LT
1.12 LT

FIRST FLOOR - TYPICAL ENLARGED UNITS FIRE PROTECTION PLAN

SCALE: 1/4"=1'-0"

KEY PLAN nts

STEVEN FELLER P.E. PL
FLORIDA P.E. Reg. # 22046
Certificate of Authorization # 00003427
500 N.E. THIRD AVENUE
FORT LAUDERDALE, FLORIDA 33301
PH: 954.467.1402 FAX: 954.467.3752
e-mail: fellerpe@fellerpe.com
JOB # 13153

STEVEN M. FELLER LICENSE No. 22046 STATE OF FLORIDA PROFESSIONAL ENGINEER

APPROVED MIAMI BEACH FIRE DEPARTMENT

HADDON HALL
1500 COLLINS AVE
MIAMI BEACH, FL

KEYPLAN N.T.S.

REVISIONS

NO.	DESCRIPTION	ISSUE DATE
1	PROGRESS TO 100% CD SET	02/07/14
4	FIRE REVIEW COMMENTS	04/04/14
9	KITCHEN RELOCATION	05/30/14
12A	FIRE DEPARTMENT PERMIT COMMENTS	09/29/14

100% CONSTRUCTION DOCUMENT SET

NORTH SEAL

Jonathan Cardello
Lic. # AR93391

ADD Inc Architecture Interiors Planning

One Biscayne Tower
Suite 1670
Two South
Biscayne Boulevard
Miami, Fl 33131
T. 305.482.8700
F. 305.482.8770
www.addinc.com
Lic. # AA26001507

Boston Miami

MTCI PRIVATE PROVIDER SERVICES, LLC

	REVIEWER INITIALS	DATE REVIEWED
BUILDING		
STRUCTURAL		
MECHANICAL		
ELECTRICAL		
PLUMBING		
SITE		

JOB NUMBER: 13036.00
CHECKED BY:
ISSUE DATE: MARCH 14, 2014
SCALE: AS NOTED

SHEET TITLE

1ST FL ENLARGED UNITS FIRE PROTECTION PLAN

SHEET NUMBER

FP2.01

COPYRIGHT ADD INC 2011

File: G:\Haddon Hall\CAD\...\Haddon_13 Fire Protection\FP2.01 (FIRST FLOOR ENLARGED UNITS).dwg | Layout: 201
Date: Oct 01, 2014 | Time: 10:19:19 AM | By: Jonathan Cardello

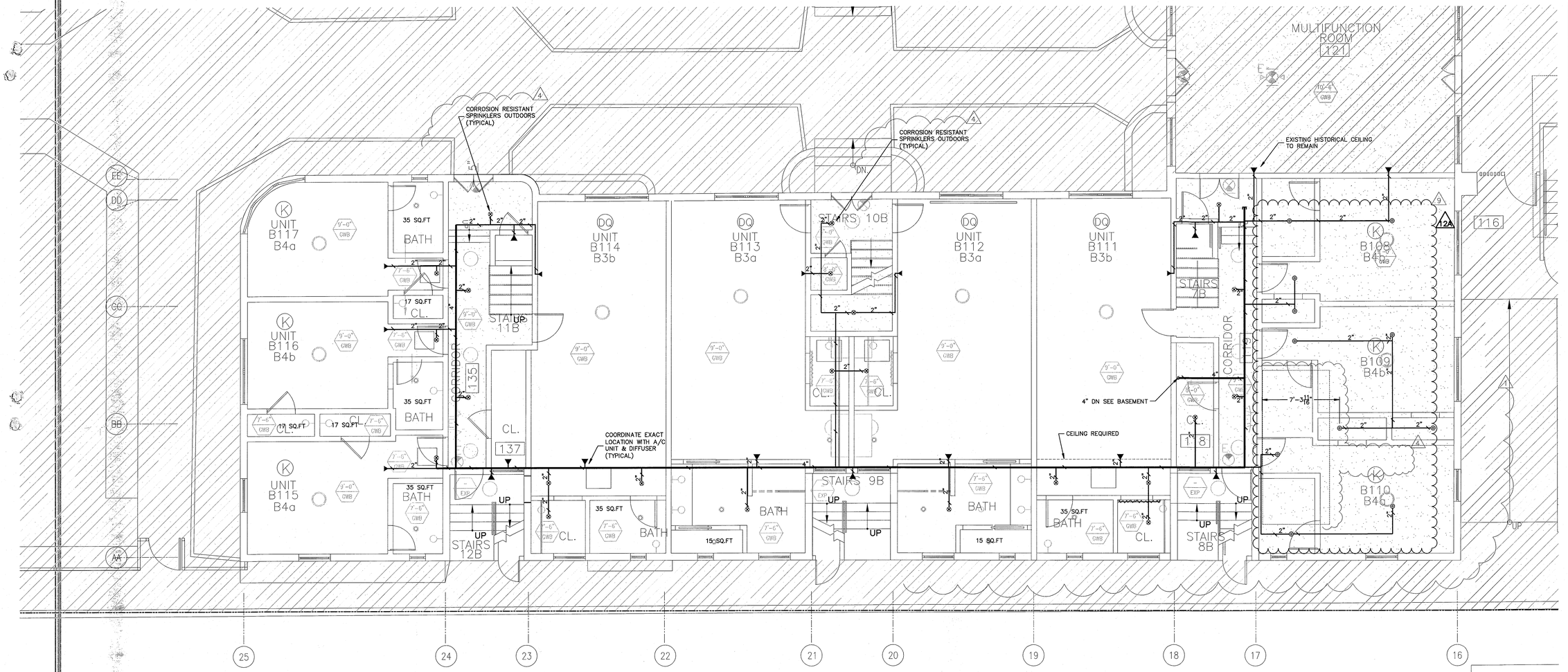

FIRST FLOOR - TYPICAL ENLARGED UNITS FIRE PROTECTION PLAN

SCALE: 1/4"=1'-0"

SPRINKLER HEAD LEGEND

- EXISTING SPRINKLER HEADS TO REMAIN
- EXISTING HEAD REMOVE & PLUG OR RELOCATE WITH NEW SPRINKLER HEAD
- NEW SPRINKLER HEADS
- EXISTING BRANCH LINE
- EXISTING BRANCH LINE TO BE REMOVED
- NEW PIPING

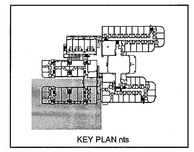
KEY PLAN nts

MTCI
PRIVATE PROVIDER SERVICES, LLC
Construction Plans Review, Inspections, Training & Consulting

	REVIEWER INITIALS	DATE REVIEWED
BUILDING		
STRUCTURAL		
MECHANICAL		
ELECTRICAL		
PLUMBING		
SITE CIVIL		

SEP 29 2014
STEVEN M. FELLER
LICENSE
No. 22046
STATE OF FLORIDA
PROFESSIONAL ENGINEER

APPROVED
MIAMI BEACH
FIRE DEPARTMENT

STEVEN FELLER, P.E., LLC
FLORIDA P.E. Reg. # 22046
Certificate of Authorization # 00003427
500 N.E. THIRD AVENUE
FORT LAUDERDALE, FLORIDA 33301
PH: 954.467.1402 FAX: 954.467.8752
e-mail: fellerpe@fellerpe.com
JOB # 13153

HADDON HALL
1500 COLLINS AVE
MIAMI BEACH, FL

KEYPLAN N.T.S.

REVISIONS

NO.	DESCRIPTION	ISSUE DATE
1	PROGRESS TO 100% CD SET	02/07/14
4	FIRE REVIEW COMMENTS	04/04/14
9	KITCHEN RELOCATION	05/30/14
12A	FIRE DEPARTMENT PERMIT COMMENTS	09/29/14

100% CONSTRUCTION DOCUMENT SET

NORTH SEAL

Jonathan Cardello
Lic. # AR93391

ADD Inc Architecture Interiors Planning

One Biscayne Tower
Suite 1670
Two South
Biscayne Boulevard
Miami, Fl 33131
T. 305.482.8700
F. 305.482.8770
www.addinc.com
Lic. # AA26001507

Boston Miami

JOB NUMBER:	13036.00
CHECKED BY:	
ISSUE DATE:	MARCH 14, 2014
SCALE:	AS NOTED

SHEET TITLE

1ST FL ENLARGED UNITS
FIRE PROTECTION PLAN

SHEET NUMBER

FP2.02

COPYRIGHT ADD INC 2011

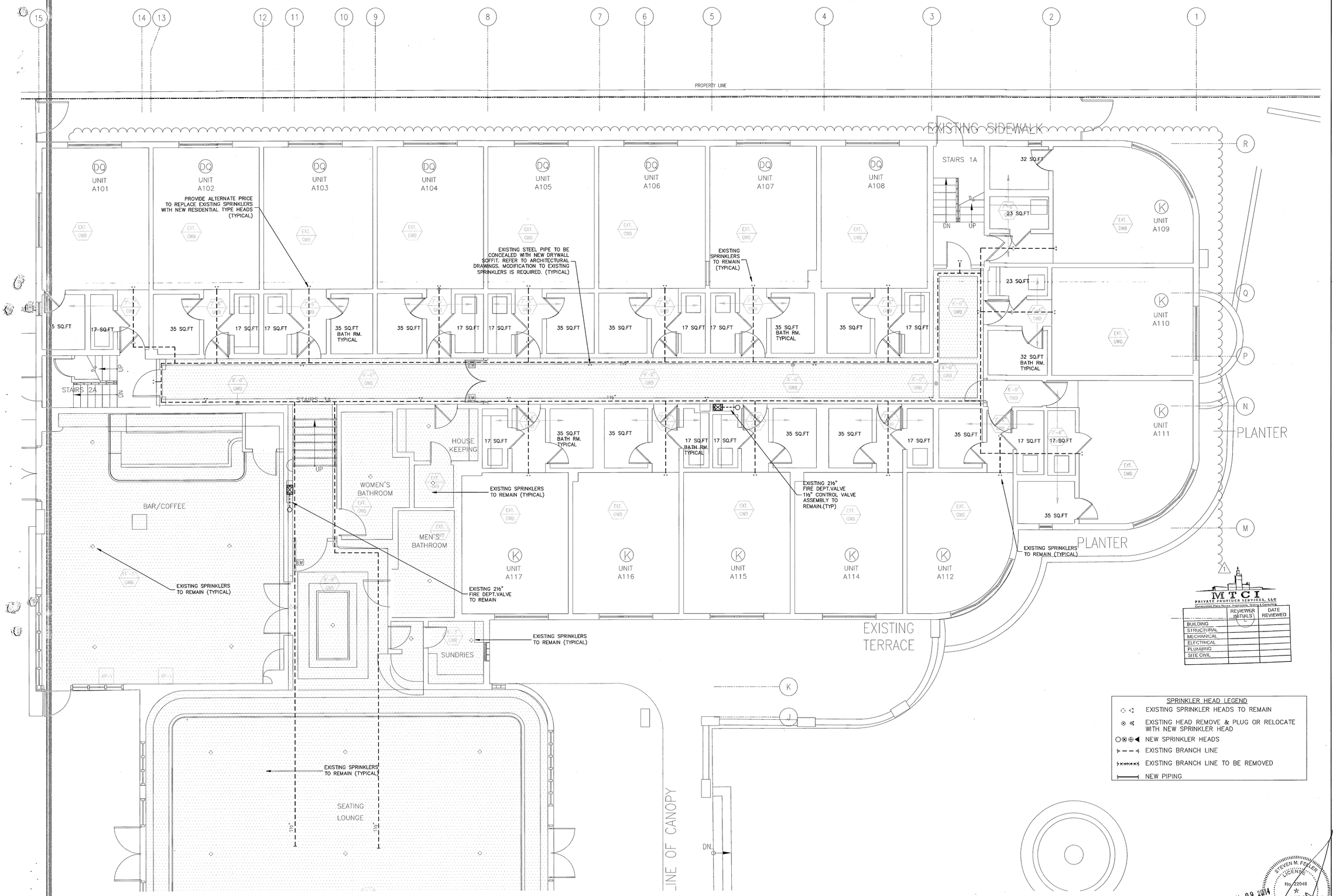

FIRST FLOOR - TYPICAL ENLARGED UNITS FIRE PROTECTION PLAN

SCALE: 1/4"=1'-0"

SPRINKLER HEAD LEGEND

- EXISTING SPRINKLER HEADS TO REMAIN
- EXISTING HEAD REMOVE & PLUG OR RELOCATE WITH NEW SPRINKLER HEAD
- NEW SPRINKLER HEADS
- EXISTING BRANCH LINE
- EXISTING BRANCH LINE TO BE REMOVED
- NEW PIPING

KEY PLAN nts

HADDON HALL
1500 COLLINS AVE

MIAMI BEACH, FL

KEYPLAN N.T.S.

REVISIONS

NO.	DESCRIPTION	ISSUE DATE
1	PROGRESS TO 100% CD SET	02/07/14

MTCI PRIVATE PROVIDER SERVICES, LLC
Construction Plans Review, Inspections, Training & Consulting

	REVIEWER INITIALS	DATE REVIEWED
BUILDING		
STRUCTURAL		
MECHANICAL		
ELECTRICAL		
PLUMBING		
SITE CIVIL		

100% CONSTRUCTION DOCUMENT SET

NORTH SEAL

Jonathan Cardello
Lic. # AR93391

ADD Inc Architecture Interiors Planning

One Biscayne Tower
Suite 1670
Two South
Biscayne Boulevard
Miami, Fl 33131
T. 305.482.8700
F. 305.482.8770
www.addinc.com
Lic. # AA26001507

Boston Miami

JOB NUMBER: 13036.00
CHECKED BY:
ISSUE DATE: MARCH 14, 2014
SCALE: AS NOTED

SHEET TITLE

1ST FL ENLARGED UNITS FIRE PROTECTION PLAN

STEVEN M. FELLER LICENSE No. 22046 STATE OF FLORIDA PROFESSIONAL ENGINEER

MAY 09 2014

APPROVED MIAMI BEACH FIRE DEPARTMENT

STEVEN FELLER P.E.,PL
FLORIDA P.E. Reg. # 22046
Certificate of Authorization # 000034327
500 N.E. THIRD AVENUE
FORT LAUDERDALE, FLORIDA 33301
PH: 954.467.1402 FAX: 954.467.3752
e-mail: fellerpe@fellerpe.com
JOB # 13153

SHEET NUMBER

FP2.03

COPYRIGHT ADD INC 2011

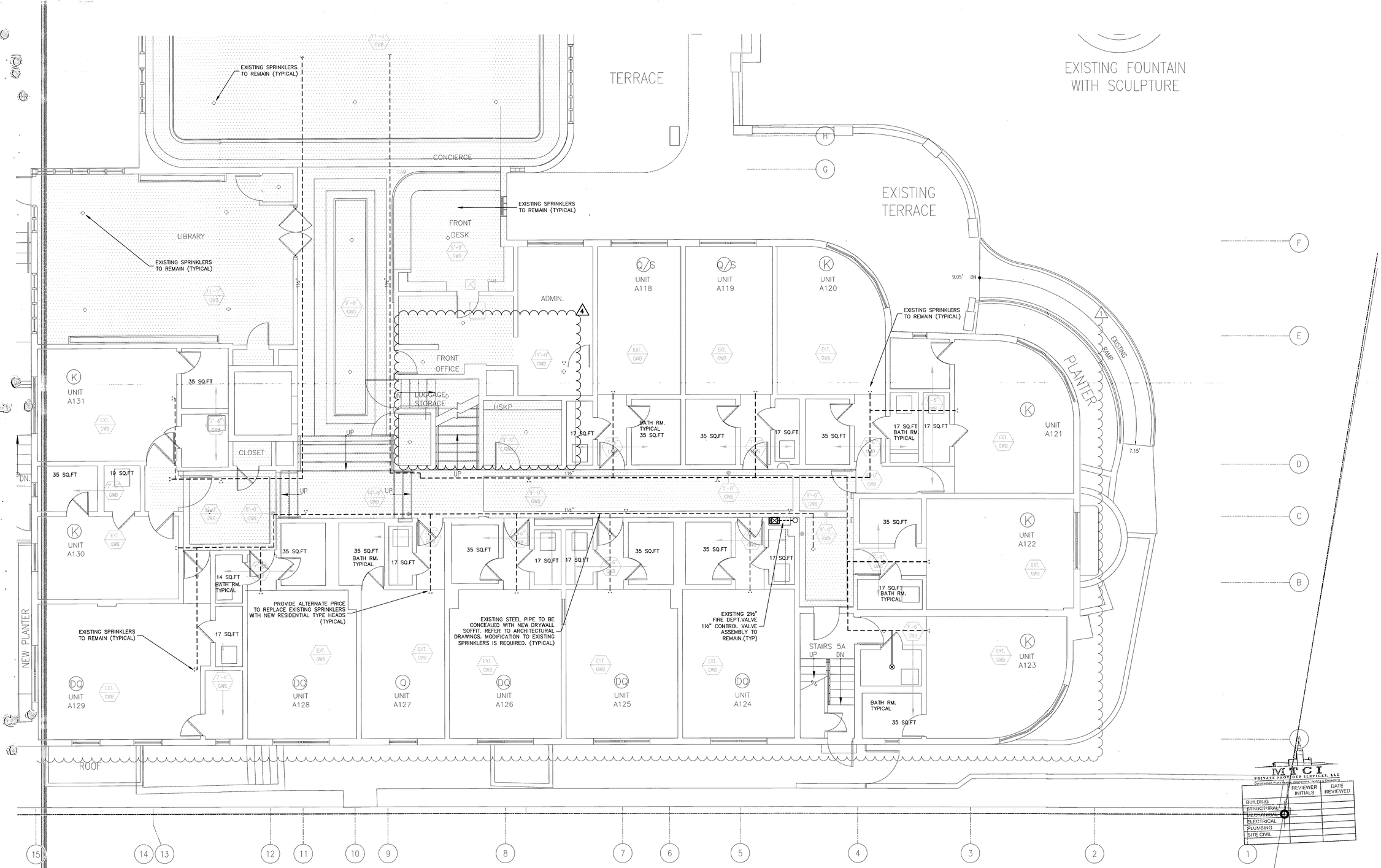

FIRST FLOOR - TYPICAL ENLARGED UNITS FIRE PROTECTION PLAN

SCALE: 1/4"=1'-0"

SPRINKLER HEAD LEGEND

- EXISTING SPRINKLER HEADS TO REMAIN
- EXISTING HEAD REMOVE & PLUG OR RELOCATE WITH NEW SPRINKLER HEAD
- NEW SPRINKLER HEADS
- EXISTING BRANCH LINE
- EXISTING BRANCH LINE TO BE REMOVED
- NEW PIPING

KEY PLAN nts

HADDON HALL
1500 COLLINS AVE

MIAMI BEACH, FL

KEYPLAN N.T.S.

REVISIONS

NO.	DESCRIPTION	ISSUE DATE
1	PROGRESS TO 100% CD SET	02/07/14
4	FIRE REVIEW COMMENTS	04/04/14

MTCI PRIVATE PROVIDER SERVICES, LLC

	REVIEWER INITIALS	DATE REVIEWED
BUILDING		
STRUCTURAL		
MECHANICAL	4	
ELECTRICAL		
PLUMBING		
SITE CIVIL		

100% CONSTRUCTION DOCUMENT SET

NORTH SEAL

STEVEN M. FELLER LICENSE No. 22046 STATE OF FLORIDA PROFESSIONAL ENGINEER

MAY 09 2014

APPROVED MIAMI BEACH FIRE DEPARTMENT

Jonathan Cardello
Lic. # AR93391

ADD Inc Architecture Interiors Planning

One Biscayne Tower
Suite 1670
Two South
Biscayne Boulevard
Miami, Fl 33131
T. 305.482.8700
F. 305.482.8770
www.addinc.com
Lic. # AA26001507

Boston Miami

STEVEN FELLER P.E., PL
FLORIDA P.E. Reg. # 22046
Certificate of Authorization # 00003427
500 N.E. THIRD AVENUE
FORT LAUDERDALE, FLORIDA 33301
PH: 954.467.1402 FAX: 954.467.5752
e-mail: fellerpe@fellerpe.com
JOB # 13133

JOB NUMBER: 13036.00

CHECKED BY:

ISSUE DATE: MARCH 14, 2014

SCALE: AS NOTED

SHEET TITLE

1ST FL ENLARGED UNITS FIRE PROTECTION PLAN

SHEET NUMBER

FP2.04

COPYRIGHT ADD INC 2011

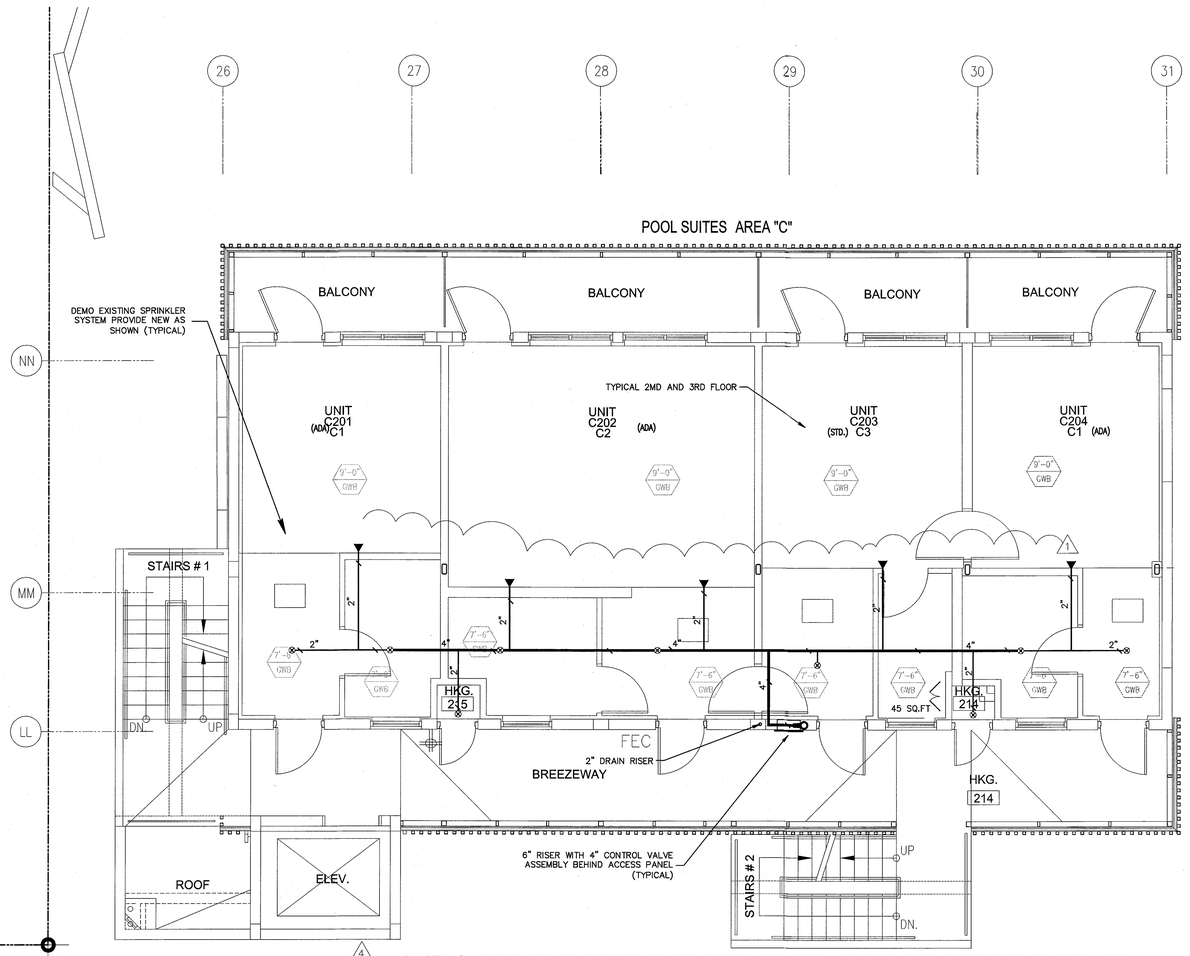

2ND & 3RD FLOOR ENLARGED UNITS FIRE PROTECTION PLAN

SCALE: 1/4"=1'-0"

SPRINKLER HEAD LEGEND

- EXISTING SPRINKLER HEADS TO REMAIN
- EXISTING HEAD REMOVE & PLUG OR RELOCATE WITH NEW SPRINKLER HEAD
- NEW SPRINKLER HEADS
- EXISTING BRANCH LINE
- EXISTING BRANCH LINE TO BE REMOVED
- NEW PIPING

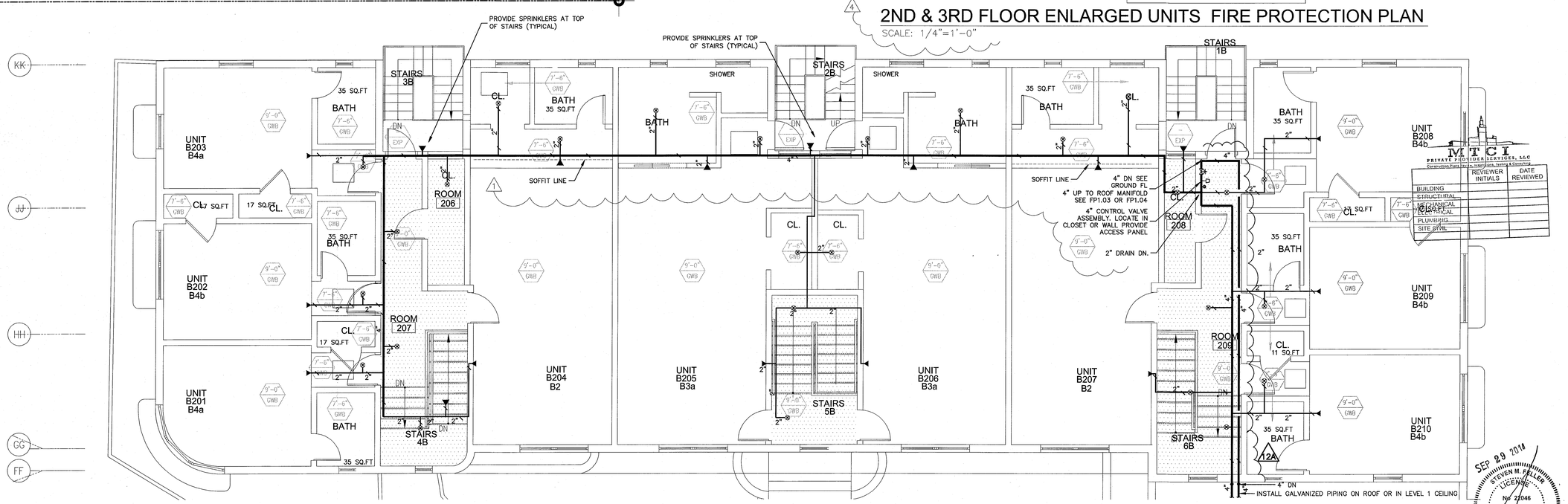

2ND FLOOR ENLARGED UNITS FIRE PROTECTION PLAN

SCALE: 1/4"=1'-0"

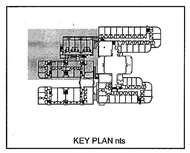

STEVEN FELLER P.E., M.E.
FLORIDA P.E./Reg. # 22046
Certificate of Authorization # 00003427
500 N.E.ENRICO AVENUE
FORT LAUDERDALE, FLORIDA 33301
PH: 954.467.1402 FAX: 954.467.5752
e-mail: feller@fellerpe.com
JOB # 13153

SEP 29 2014 STEVEN M. FELLER LICENSE No. 22046 STATE OF FLORIDA PROFESSIONAL ENGINEER

APPROVED MIAMI BEACH FIRE DEPARTMENT

HADDON HALL
1500 COLLINS AVE
MIAMI BEACH, FL

KEYPLAN N.T.S.

REVISIONS

NO.	DESCRIPTION	ISSUE DATE
1	PROGRESS TO 100% CD SET	02/07/14
4	FIRE REVIEW COMMENTS	04/04/14
12A	FIRE DEPARTMENT PERMIT COMMENTS	09/29/14

MTCI PRIVATE PROVIDER SERVICES, LLC
Construction Plans Review, Inspections, Testing & Consulting

	REVIEWER INITIALS	DATE REVIEWED
BUILDING		
STRUCTURAL		
MECHANICAL		
ELECTRICAL		
PLUMBING		
SITE CIVIL		

100% CONSTRUCTION DOCUMENT SET

NORTH SEAL

Jonathan Cardello Lic. # AR93391

ADD Inc Architecture Interiors Planning

One Biscayne Tower
Suite 1670
Two South
Biscayne Boulevard
Miami, Fl 33131
T. 305.482.8700
F. 305.482.8770
www.addinc.com
Lic. # AA26001507

Boston Miami

JOB NUMBER: 13036.00
CHECKED BY:
ISSUE DATE: MARCH 14, 2014
SCALE: AS NOTED

SHEET TITLE

2ND FL ENLARGED UNITS FIRE PROTECTION PLAN

SHEET NUMBER

FP2.05

COPYRIGHT ADD INC 2011

[File: P:\Haddon Hall\VA_Haddon 13_Fire Protect\Working\FP2.05(FP2.03)FP2.06(FP2.03)FP2.08(FP2.03)FP2.09 Enlarged 2nd Flr Units.dwg | Layout: 205
User: Ray Hermida | Date: September 29, 2014 - 10:28:01 PM

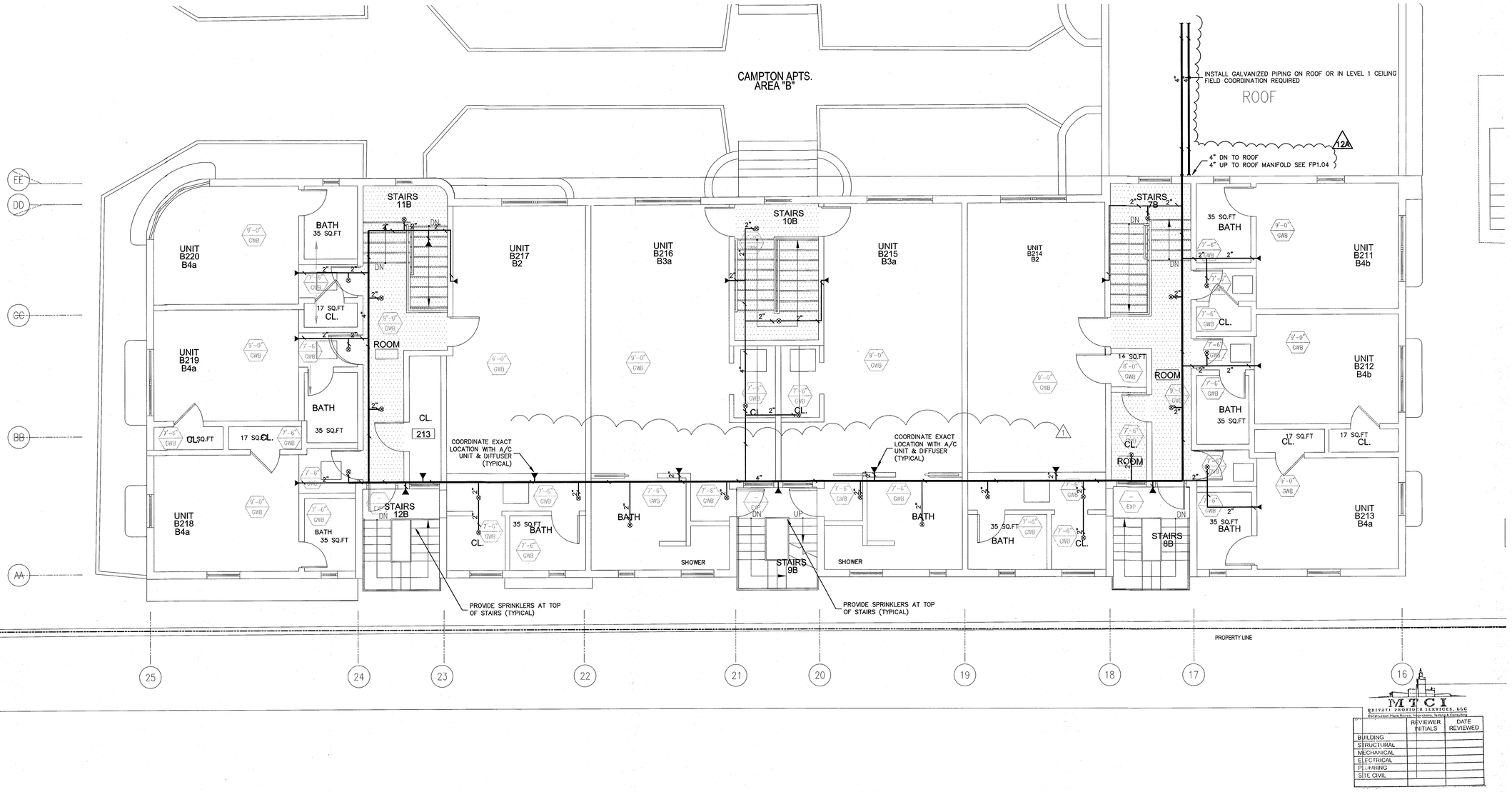

2ND FLOOR ENLARGED UNITS FIRE PROTECTION PLAN

SCALE: 1/4"=1'-0"

SPRINKLER HEAD LEGEND

- EXISTING SPRINKLER HEADS TO REMAIN
- EXISTING HEAD REMOVE & PLUG OR RELOCATE WITH NEW SPRINKLER HEAD
- NEW SPRINKLER HEADS
- EXISTING BRANCH LINE
- EXISTING BRANCH LINE TO BE REMOVED
- NEW PIPING

KEY PLAN nts

STEVEN FELLER P.E.,PL
FLORIDA P.E. Reg. # 22046
Certificate of Authorization # 00003427
500 NE THIRD AVENUE
FORT LAUDERDALE, FLORIDA 33301
PH: 954.467.1402 FAX: 954.463.5752
e-mail: fellerpe@fellerpe.com
JOB # 13153

STEVEN M. FELLER LICENSE NO. 22046 STATE OF FLORIDA PROFESSIONAL ENGINEER
SEP 29 2014

APPROVED MIAMI BEACH FIRE DEPARTMENT

MTCI
PRIVATE PROVIDER SERVICES, LLC
Fire Protection Plans Review, Inspections, Training & Consulting

	REVIEWER INITIALS	DATE REVIEWED
BUILDING		
STRUCTURAL		
MECHANICAL		
ELECTRICAL		
PLUMBING		
SITE CIVIL		

HADDON HALL
1500 COLLINS AVE.
MIAMI BEACH, FL

KEYPLAN N.T.S.

REVISIONS

NO.	DESCRIPTION	ISSUE DATE
1	PROGRESS TO 100% CD SET	02/07/14
12A	FIRE DEPARTMENT PERMIT COMMENTS	09/29/14

100% CONSTRUCTION DOCUMENT SET

NORTH SEAL

Jonathan Cardello
Lic. # AR93391

ADD Inc Architecture Interiors Planning

One Biscayne Tower
Suite 1670
Two South
Biscayne Boulevard
Miami, Fl 33131
T. 305.482.8700
F. 305.482.8770
www.addinc.com
Lic. # AA26001507

Boston Miami

JOB NUMBER: 13036.00
CHECKED BY:
ISSUE DATE: MARCH 14, 2014
SCALE: AS NOTED

SHEET TITLE

2ND FL ENLARGED UNITS FIRE PROTECTION PLAN

SHEET NUMBER

FP2.06

COPYRIGHT ADD INC 2011

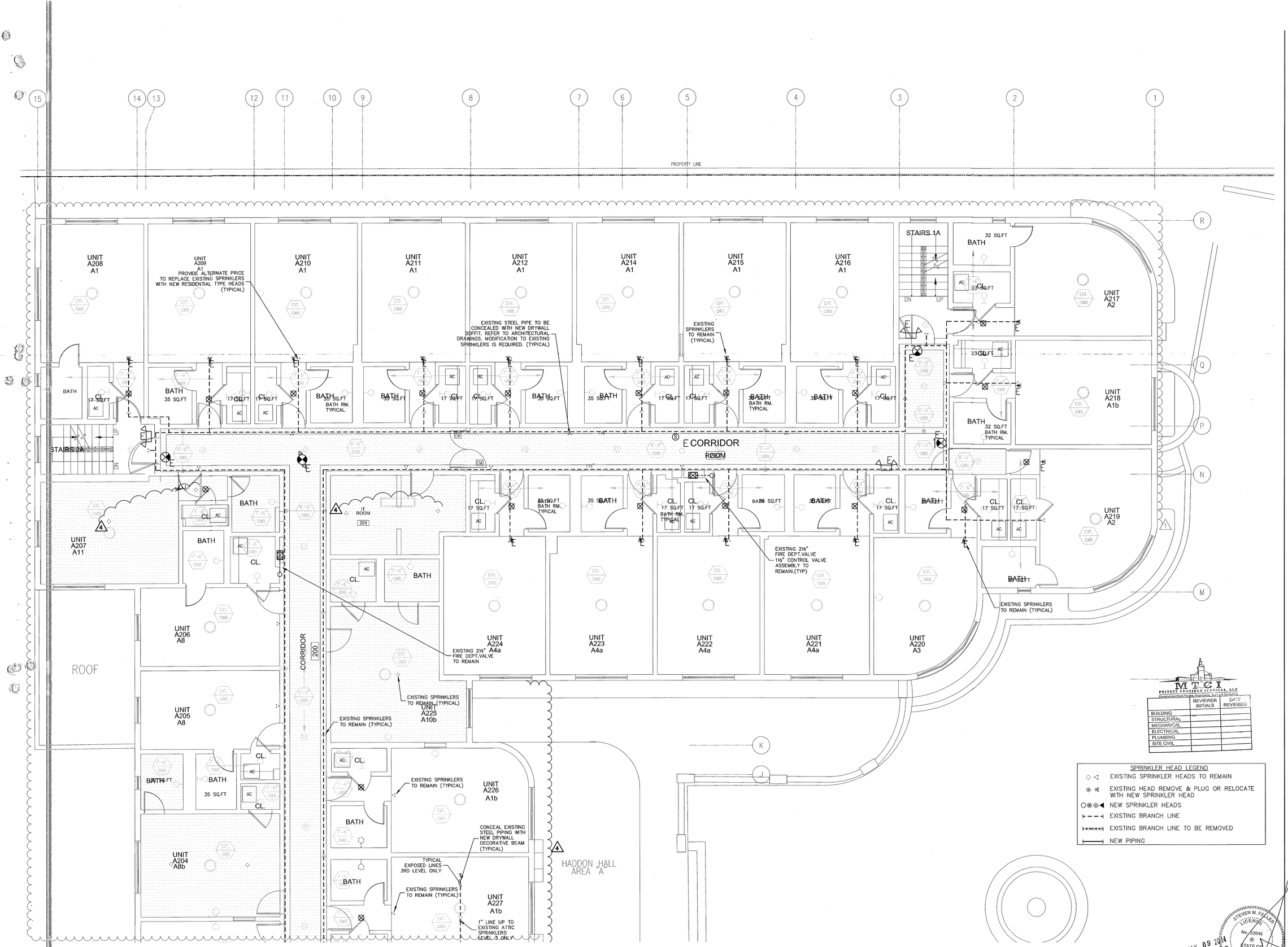

2ND & 3RD FLOOR - TYPICAL ENLARGED UNITS FIRE PROTECTION PLAN

SCALE: 1/4"=1'-0"

MTCI PRIVATE PROVIDER SERVICES, LLC
Construction Plans Review, Inspections, Testing & Consulting

	REVIEWER INITIALS	DATE REVIEWED
BUILDING		
STRUCTURAL		
MECHANICAL		
ELECTRICAL		
PLUMBING		
SITE CIVIL		

SPRINKLER HEAD LEGEND

- EXISTING SPRINKLER HEADS TO REMAIN
- EXISTING HEAD REMOVE & PLUG OR RELOCATE WITH NEW SPRINKLER HEAD
- NEW SPRINKLER HEADS
- EXISTING BRANCH LINE
- EXISTING BRANCH LINE TO BE REMOVED
- NEW PIPING

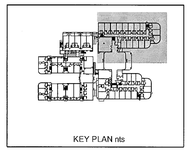

KEY PLAN nts

MAY 09 2014

STEVEN M. FELLER LICENSE No. 22046 STATE OF FLORIDA PROFESSIONAL ENGINEER

APPROVED MIAMI BEACH FIRE DEPARTMENT

STEVEN FELLER P.E.,PL
FLORIDA P.E. Reg. # 22046
Certificate of Authorization # 00003427
500 N.E. THIRD AVENUE
FORT LAUDERDALE, FLORIDA 33301
PH: 954.467.1402 FAX: 954.467.5752
e-mail: fellerpe@fellerpe.com
JOB # 13153

HADDON HALL
1500 COLLINS AVE

MIAMI BEACH, FL

KEYPLAN N.T.S.

REVISIONS

NO.	DESCRIPTION	ISSUE DATE
1	PROGRESS TO 100% CD SET	02/07/14
4	FIRE REVIEW COMMENTS	04/04/14

100% CONSTRUCTION DOCUMENT SET

NORTH SEAL

Jonathan Cardello
Lic. # AR93391

ADD Inc Architecture Interiors Planning

One Biscayne Tower
Suite 1670
Two South
Biscayne Boulevard
Miami, Fl 33131
T. 305.482.8700
F. 305.482.8770
www.addinc.com
Lic. # AA26001507

Boston Miami

JOB NUMBER: 13036.00
CHECKED BY:
ISSUE DATE: MARCH 14, 2014
SCALE: AS NOTED

SHEET TITLE

2ND & 3RD FL ENLARGED UNITS FIRE PROTECTION PLAN

SHEET NUMBER

FP2.07

COPYRIGHT ADD INC 2011

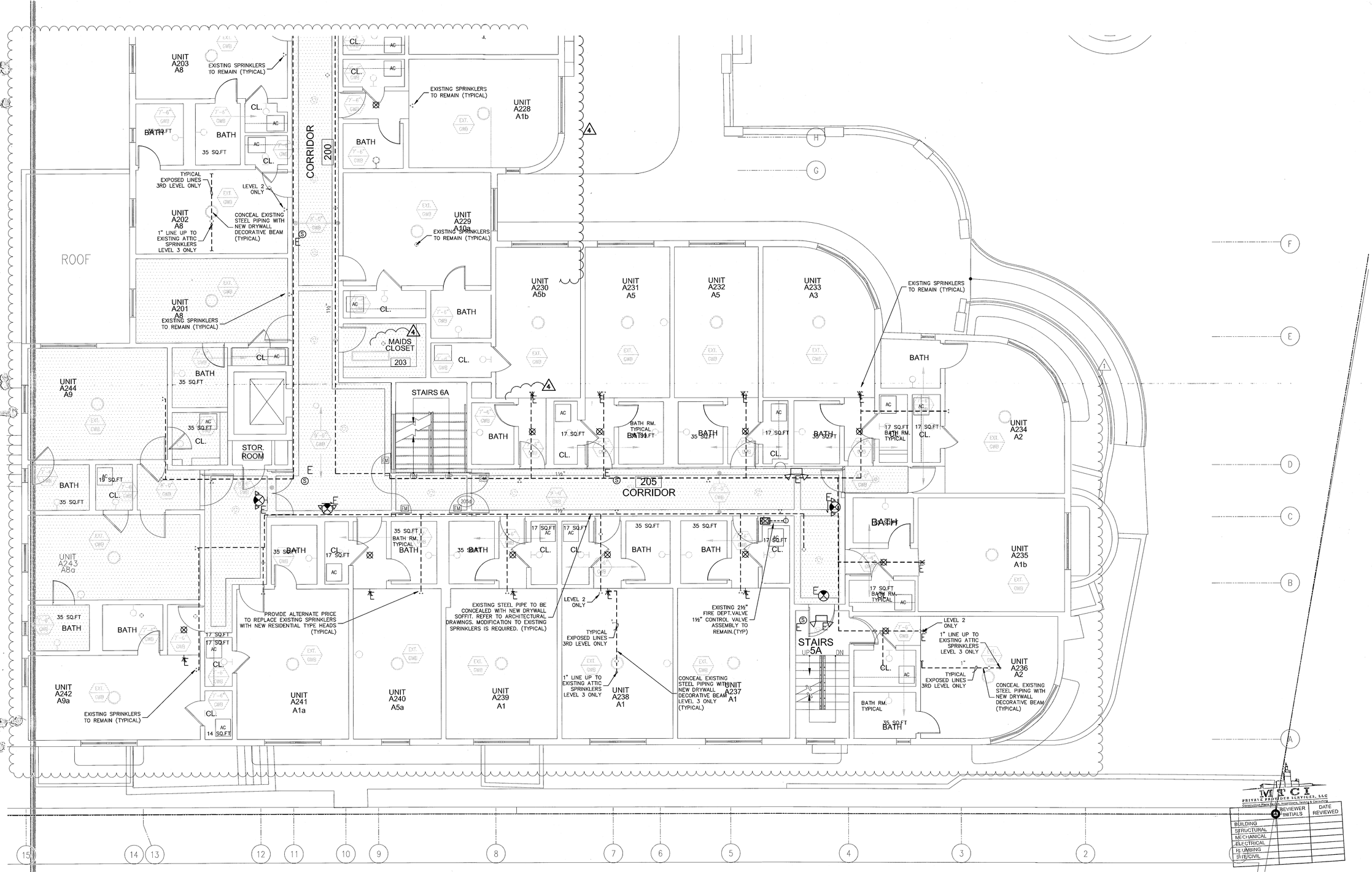

REVIEWER INITIALS	DATE REVIEWED
BUILDING	
STRUCTURAL	
MECHANICAL	
ELECTRICAL	
PLUMBING	
SITE/CIVIL	

SPRINKLER HEAD LEGEND

- EXISTING SPRINKLER HEADS TO REMAIN
- EXISTING HEAD REMOVE & PLUG OR RELOCATE WITH NEW SPRINKLER HEAD
- NEW SPRINKLER HEADS
- EXISTING BRANCH LINE
- EXISTING BRANCH LINE TO BE REMOVED
- NEW PIPING

2ND & 3RD FLOOR ENLARGED UNITS FIRE PROTECTION PLAN

SCALE: 1/4"=1'-0"

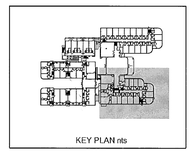

KEY PLAN nts

MAY 09 2014

APPROVED MIAMI BEACH FIRE DEPARTMENT

STEVEN FELLER P.E.,PL
FLORIDA P.E. Reg. # 22046
Certificate of Authorization # 00003427
500 N.E. THIRD AVENUE
FORT LAUDERDALE, FLORIDA 33301
PH: 954.467.1402 FAX: 954.467.5752
e-mail: fellerpe@fellerpe.com
JOB # 13153

HADDON HALL
1500 COLLINS AVE

MIAMI BEACH, FL

KEYPLAN N.T.S.

REVISIONS

NO.	DESCRIPTION	ISSUE DATE
1	PROGRESS TO 100% CD SET	02/07/14
4	FIRE REVIEW COMMENTS	04/04/14

100% CONSTRUCTION DOCUMENT SET

NORTH SEAL

Jonathan Cardello
Lic. # AR93391

ADD Inc Architecture Interiors Planning

One Biscayne Tower
Suite 1679
Two South
Biscayne Boulevard
Miami, Fl 33131
T. 305.482.8700
F. 305.482.8770
www.addinc.com
Lic. # AA26001507

Boston Miami

JOB NUMBER: 13036.00

CHECKED BY:

ISSUE DATE: MARCH 14, 2014

SCALE: AS NOTED

SHEET TITLE

2ND & 3RD FL ENLARGED UNITS FIRE PROTECTION PLAN

SHEET NUMBER

FP2.08

COPYRIGHT ADD INC 2011

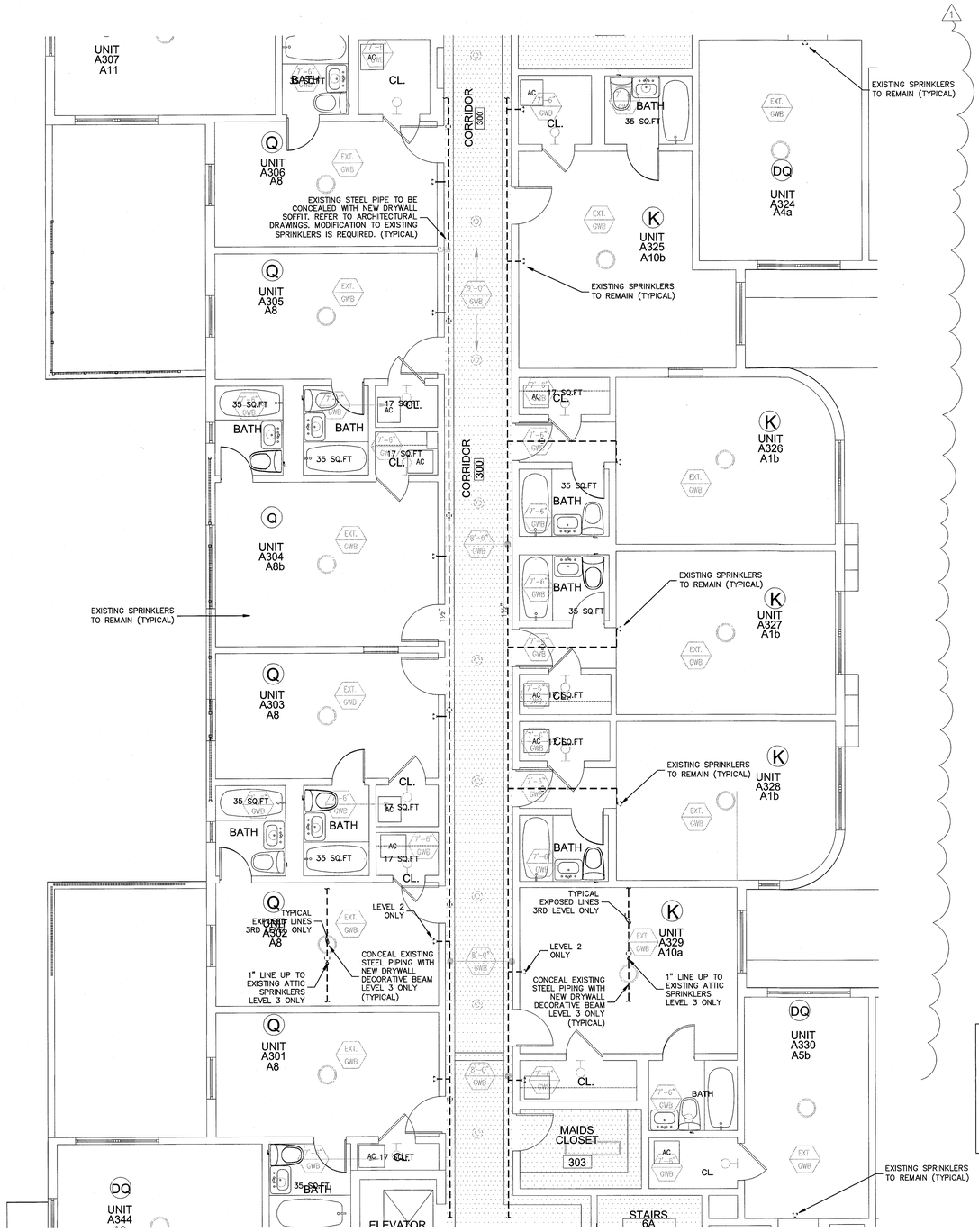

2ND & 3RD FLOOR ENLARGED UNITS FIRE PROTECTION PLAN

SCALE: 1/4"=1'-0"

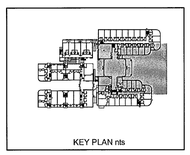

KEY PLAN nts

SPRINKLER HEAD LEGEND

- EXISTING SPRINKLER HEADS TO REMAIN
- EXISTING HEAD REMOVE & PLUG OR RELOCATE WITH NEW SPRINKLER HEAD
- NEW SPRINKLER HEADS
- EXISTING BRANCH LINE
- EXISTING BRANCH LINE TO BE REMOVED
- NEW PIPING

MAY 09 2014

STEVEN M. FELLER LICENSE No 22046 STATE OF FLORIDA PROFESSIONAL ENGINEER

APPROVED MIAMI BEACH FIRE DEPARTMENT

STEVEN FELLER P.E.,PL
FLORIDA P.E. Reg. # 22046
Certificate of Authorization # 00003427
500 N.E. THIRD AVENUE
FORT LAUDERDALE, FLORIDA 33301
PH: 954.467.1402 FAX: 954.467.5752
e-mail: fellerpe@fellerpe.com
JOB # 13153

HADDON HALL
1500 COLLINS AVE

MIAMI BEACH, FL

KEYPLAN N.T.S.

REVISIONS

NO.	DESCRIPTION	ISSUE DATE
1	PROGRESS TO 100% CD SET	02/07/14

MDCI PRIVATE PROVIDER SERVICES, LLC
Construction Plans Review, Inspections, Testing & Compliance

	REVIEWER INITIALS	DATE REVIEWED
BUILDING		
STRUCTURAL		
MECHANICAL		
ELECTRICAL		
PLUMBING		
SITE CIVIL		

100% CONSTRUCTION DOCUMENT SET

NORTH SEAL

Jonathan Cardello
Lic. # AR93391

ADD Inc Architecture Interiors Planning

One Biscayne Tower
Suite 1670
Two South
Biscayne Boulevard
Miami, Fl 33131
T. 305.482.8700
F. 305.482.8770
www.addinc.com
Lic. # AA26001507

Boston Miami

JOB NUMBER:	13036.00
CHECKED BY:	
ISSUE DATE:	MARCH 14, 2014
SCALE:	AS NOTED

SHEET TITLE

2ND & 3RD FL ENLARGED UNITS FIRE PROTECTION PLAN

SHEET NUMBER

FP2.09

COPYRIGHT ADD INC 2011

1 or 2 Hour Fire Rated Through Penetration Firestop for Single Metallic Pipe through Gypsum Walls using TREMstop IA.

WL 1158

F-Rating = 1 and 2 Hr.
T-Rating = 1/4 Hr.

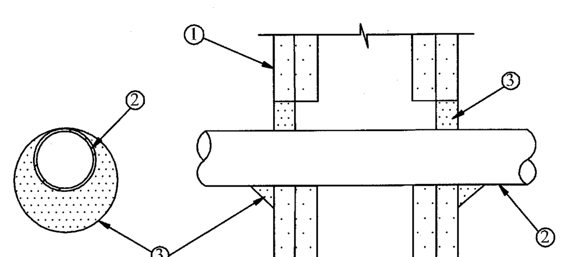

① Pre-Rated Gypsum Wallboard/Stud Wall Assembly
② Metallic Pipe - A) Steel Pipe - 12" diam. (or smaller) Sch. 10 (or heavier) steel pipe.
B) Iron Pipe - 12" diam. (or smaller) cast or ductile iron pipe.
C) Copper Tubing - 4" diam. (or smaller) Type L (or heavier) copper tubing.
D) Copper Pipe - 4" diam. (or smaller) Regular (or heavier) copper pipe.
The annular space shall be min. 0" to max. 1" within the firestop system.
③ TREMstop IA - Min. 1/2" thickness of sealant applied within opening. Min. 1/4" cant bead of sealant to be applied at point contact.

FIRE RATED PIPE PENETRATION DETAIL

1 & 2 Hour Fire Rated Through Penetration Firestop for Single Metal Pipe through Concrete floors or walls using FYRE-SIL or FYRE-SIL S/L

CAJ1142

F-rating = 1 & 2 Hr.
T-rating = 0 Hr.

Drawing not to scale

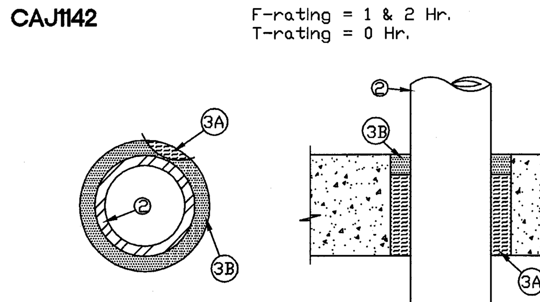

① Floor or Wall assembly = 4 ½" thick concrete
② · Steel Pipe - 4" diam.(or smaller) Sch. 40 (or heavier) steel.
· Annular space is max. 3/4"
③ A) 3½ " thick mineral wool (min 4.0 pcf), friction fitted.
B) 1" thickness of FYRE-SIL or FYRE-SIL S/L (floors only)

FIRE RATED PIPE PENETRATION DETAIL

N.T.S.

3 Hour Fire Rated Through Penetration Firestop for Single Metal Pipe through Concrete Floors or Walls using FYRE-SIL or FYRE-SIL S/L.

CAJ 1179

F-Rating = 3 Hr.
T-Rating = 0 Hr.

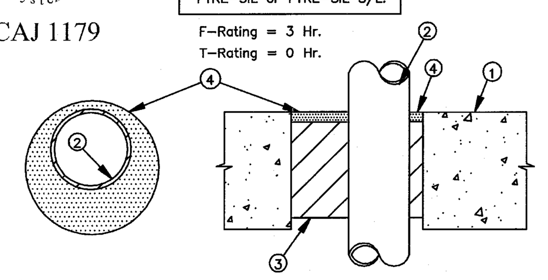

① Pre-Rated Concrete Floors or Block Walls = Min. 4-1/2" thickness
② Metallic Pipe: A) Steel Pipe - 8" diam. (or smaller) Sch. 10 (or heavier) steel pipe.
B) Conduit - 4" diam. (or smaller) EMT or steel conduit
C) Copper Tubing - 4" diam. (or smaller) Type L (or heavier) copper tubing.
D) Copper Pipe - 4" diam. (or smaller) Regular (or heavier) copper pipe.
The annular space shall be min. 1/2" to max. 3-3/8" within the firestop system.
③ Packing Material - Min. 3-1/2" thick mineral wool (min. 6.0 pcf) insulation, firmly packed into opening as a permanent form.
④ FYRE-SIL or FYRE-SIL S/L - Min. 1/2" thickness of sealant applied within annulus, flush with top of floor surface or with both sides of the wall assembly.

NOTE: Apply FYRE-SIL S/L to Floor Applications Only.

FIRE RATED PIPE PENETRATION DETAIL

N.T.S.

2 Hour Fire Rated Through Penetration Firestop for Single Plastic Pipe through Gypsum Walls using TREMstop WS and TREMstop MCR.

3735 Green Rd.
Beachwood, OH, 44122

WL 2063

F-Rating = 2 Hr.
T-Rating = 1 Hr.

Drawing not to scale

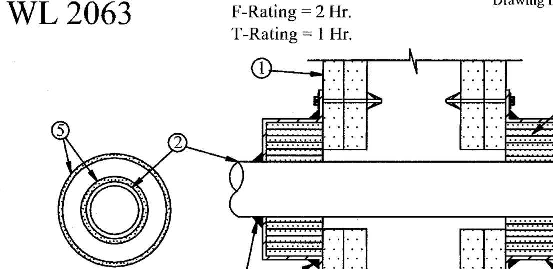

① Pre-Rated Gypsum Wallboard/Stud Wall Assembly
② Plastic Pipe - Nom. 2-1/2" diam. (or smaller) CPVC pipe for use in open or closed piping systems. A max. annular space of 1/8" is required within the system.
③ TREMstop WS - Intumescent wrap strips, continuously wrapped around the outer circumference of the pipe six times on both sides of wall assembly.
④ TREMstop MCR - Prefabricated steel collar wrapped over the wrap strips (Item 3) and mechanically fastened to both sides of the wall assembly.
⑤ FYRE-SIL - Min. 1/4" thickness of sealant applied at the interface of the wall and collar, and the interface of the collar and pipe. Sealant applied on both sides of wall.

SPRINKLER SPECIFICATION

SCOPE OF WORK: PROVIDE NEW SPRINKLER SYSTEM IN RENOVATED HOTEL ROOMS (CAMPTON APTS), PROVIDE NEW SPRINKLER SYSTEM IN NEW POOL SUITES BUILDING. MODIFY EXISTING SPRINKLER SYSTEM AT HADDON HALL IN BASEMENT & CONCEAL EXISTING EXPOSED STEEL SPRINKLER PIPING, HADDON HALL.

1. ALL PIPING PRODUCTS TO BE PURCHASED BY U.S.A. MADE MANUFACTURERS ONLY' (NO EXCEPTIONS)
2. EXAMINE THE ARCHITECTURAL DRAWINGS AND THE DRAWINGS OF ALL OTHER TRADES AND FIELD VERIFY THE LOCATION OF ALL LIGHTING FIXTURES, DIFFUSERS, EXISTING SPRINKLER HEADS AND OTHER EQUIPMENT THAT AFFECTS THIS WORK.
3. VISIT AND CAREFULLY EXAMINE THE EXISTING SPACE SO AS TO BECOME FAMILAR WITH EXISTING CONDITIONS AND DIFFICULTIES. SUBMISSION OF A PROPOSAL WILL BE CONSTRUED AS EVIDENCE THAT SUCH AN EXAMINATION HAS BEEN MADE AND LATER CLAIMS FOR LABOR, EQUIPMENT, OR MATERIALS REQUIRED BECAUSE OF DIFFICULTIES ENCOUNTERED, WHICH COULD HAVE BEEN FORESEEN HAD SUCH AN EXAMINATION BEEN MADE, WILL NOT BE RECOGNIZED.
4. BASE ALL LABOR PRICING ON REGULAR TIME (NON-PREMIUM TIME). HOWEVER, ALL CONNECTION SCHEDULING MUST BE APPROVED BY THE BUILDING'S MANAGEMENT PRIOR TO INTERRUPTION OF ANY BUILDING'S SERVICES. SUBMIT ADDITIONAL COST FOR EVALUATION TO MAKE EACH NEW CONNECTION ON PREMIUM TIME.
5. PRIOR TO INSTALLING OR SUBMITTING FOR APPROVAL ANY PORTION OF THIS WORK, COORDINATE THIS WORK WITH ALL OTHER TRADES AND AFFIX INDICATION OF THIS COORDINATION TO EACH SHOP DRAWING SUBMITTED FOR APPROVAL.
6. REMOVE AND RELOCATE EXISTING SPRINKLER HEADS AND PIPING AS INDICATED ON SPRINKLER PLANS.
7. COORDINATE EXACT LOCATION OF SPRINKLER HEADS WITH ARCHITECT'S REFLECTED CEILING PLANS AND ALL OTHER TRADES.
8. SPRINKLER HEADS INSTALLED IN HUNG CEILING WILL BE POSITIONED AS FOLLOWS:
   - LOCATED WITHIN A TOLERANCE OF ± ½ INCH OF THE CENTERLINE OF THE TILES.
9. INSTALL SPRINKLER HEADS TIGHT TO BOTTOM OF HUNG CEILING, WITH CARE THAT THE FINISH IS NOT DAMAGED.
10. CUT AND CONNECT NEW SPRINKLER HEADS TO EXISTING PIPING. ADJUST SPRINKLER PIPE SIZES WHERE REQUIRED.
11. CONFORM TO THE FOLLOWING APPLICABLE CODE WHICH COVERS THE REQUIREMENTS FOR THIS PROJECTS LOCATION:
   APPLICABLE CODES AND STANDARDS
   FLORIDA BUILDING CODE (2010)
   FLORIDA FIRE PREVENTION CODE (2010)
   N.F.P.A. 1 (2009) AS MODIFIED BY THE FLORIDA PREVENTION CODE
   N.F.P.A. 101 (2009) AS MODIFIED BY THE FLORIDA PREVENTION CODE
   N.F.P.A. 13 (2007)
   N.F.P.A. 72 (2007)
12. ALL NEW SPRINKLER BRANCH LINES TO BE 1" UNLESS OTHERWISE NOTED.
13. ALL NEW SPRINKLER BRANCH LINES EXCEEDING 1 FOOT IN LENGTH TO BE PROVIDED WITH HANGERS.
14. ALL NEW PIPING TO MATCH EXISTING.
15. ALL FITTINGS TO BE CAST MALLEABLE IRON THREADED OR VICTAULIC GROVED. PROVIDE ALTERNATE PRICE TO PROVIDE CPVC PIPING IN CONCEALED CEILING AREAS. CPVC NOT TO BE INSTALLED EXPOSED. MUST BE ABOVE A CEILING.
16. ONLY SHOULDER NIPPLES WILL BE USED. CLOSE NIPPLES WILL NOT BE ACCEPTABLE. ADJUST SPRINKLER HEAD TO THE NEW CEILING HEIGHT.
17. WHEN CONCEALED TYPE SPRINKLER HEADS ARE USED, THE COVER PLATES WILL BE FLUSH WITH THE CEILING PLANE TO LIMIT SHADOW EFFECT. TOLERANCE GREATER THAN _ 1/8 INCH ARE UNACCEPTABLE.
18. USE LIGHT HAZARD SIZING AND SPACING.
19. ARRANGE THE PERMANENT INSTALLATION OF PIPING SO THAT ALL OR ANY PART OF THE WORK CAN BE COMPLETELY DRAINED. PIPING TO BE PITCHED SO AS TO DRAIN THE MAIN DRAIN OR AUXILIARY DRAIN.
20. WHEN THE INSTALLATION OF A FLOOR HAS BEEN COMPLETED, TEST IT INDEPENDENTLY OF THE REST OF THE BUILDING.
21. THE SPRINKLER SYSTEM WILL BE HYDROSTATICALLY TESTED UNDER A MINIMUM PRESSURE OF 200 PSI FOR TWO HOURS.
22. DURING THE TEST PERIOD, THE SPRINKLER SYSTEM WILL NOT BE CONNECTED TO THE DOMESTIC WATER SYSTEM OF THE BUILDING.
23. REPLACE WORK FOUND DEFECTIVE OR REPAIR IF SO DIRECTED. AFTER REPLACEMENT OR REPAIR, TEST WORK AGAIN AS SPECIFIED. REPEAT UNTIL SATISFACTORY.
24. AFTER TEST IS COMPLETED, FLUSH ALL PIPING AT THE FLOW RATE DESIGNATED IN N.F.P.A. No. 13. FLUSH PIPING USING SUFFICIENT WATER TO PRODUCE A MINIMUM WATER VELOCITY OF 2.5 FEET PER SECOND THROUGH PIPING BEING FLUSHED. CONTINUE UNTIL DISCHARGE WATER SHOWS NO DISCOLORATION. DRAIN AT LOW POINTS. AFTER FLUSHING AND CLEANING, PREPARE SYSTEM FOR SERVICE BY IMMEDIATELY FILLING PIPING.
25. SUBMIT COMPLETE HYDRAULIC CALCULATIONS FOR EACH SYSTEM ON ALL FLOORS WITH FLOW TEST TAKEN WITHIN THE LAST 6 MONTHS.
26. USE THE FOLLOWING GENERAL DESIGN DENSITY CRITERIA:
   - LIGHT HAZARD: .10 GPM AT 1500 SQ. FT.
27. CONTRACTOR TO BE RESPONSIBLE AND COORDINATE ALL MATERIALS USED ON SITE ARE COMPATIBLE WITH AND LISTED FOR USE WITH CPVC PIPE. EXTREME CARE SHALL BE TAKEN IN THE HANDLING AND INSTALLATION OF CPVC IN STRICT ACCORDANCE WITH MANUFACTURES GUIDELINES. ONLY TRAINED AND CERTIFIED INSTALLERS SHALL HANDLE AND INSTALL CPVC PIPING AND FITTINGS.
28. CONTRACTOR TO BE RESPONSIBLE AND INSURE ALL EXISTING SPRINKLER SYSTEM AND COMPONENTS ARE CODE COMPLIANT AND PERFORMING PROPERLY UP TO AND INCLUDING HANGER QUANTITIES.
29 CONTRACTOR TO PROVIDE COORDINATED SHOP DRAWINGS & HYDRAULIC CALCULATIONS TO A.H.J. & ENGINEER PRIOR TO CONSTRUCTION.

MTCI
PRIVATE PROVIDER SERVICES, LLC
Construction Plans Review, Inspections, Testing & Consulting

	REVIEWER INITIALS	DATE REVIEWED
BUILDING		
STRUCTURAL		
MECHANICAL		
ELECTRICAL		
PLUMBING		
SITE CIVIL		

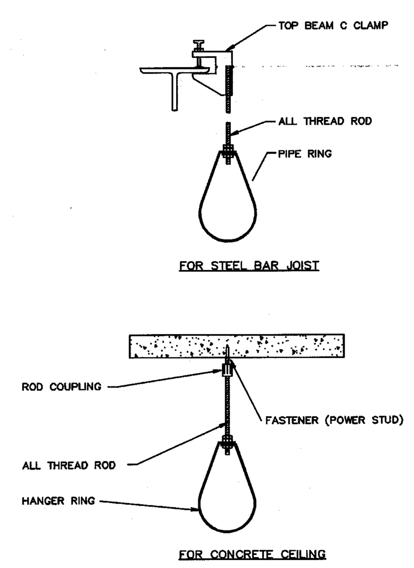

HANGER ROD SCHEDULE			
PIPE SIZE	ROD SIZE	PIPE SIZE	ROD SIZE
UP TO 4"	3/8" DIA.	10" AND 12"	5/8" DIA.
5", 6" & 8"	1/2" DIA.		

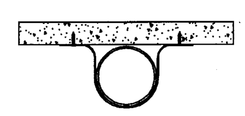

CPVC PIPING HANGER DETAILS

N.T.S.

HANGER DETAILS

N.T.S.

HANGER SPAN SCHEDULE

STEEL PIPE

DIA., IN.	SPAN, FT(M)	DIA., IN.	SPAN, FT(M)
1	12(3.7)	3	15(4.6)
1 1/4	12(3.7)	4	15(4.6)
1 1/2	15(4.6)	5	15(4.6)
2	15(4.6)	6	15(4.6)
2 1/2	15(4.6)	8	15(4.6)
		10	20(6.0)
		12	20(6.0)

BLAZE MASTER CPVC PIPE

NOMINAL DIA., IN.	SPAN, FT(M)	DROP TEE FT(M)	DROP ELBOW IN.(MM)
3/4	5.5(1.7)	3(0.91)	6(152)
1	6.0(1.8)	4(1.22)	9(229)
1 1/4	6.5(2.0)	5(1.52)	12(305)
1 1/2	7.0(2.1)	7.0(2.1)	12(305)
2	8.0(2.4)	7.0(2.1)	12(305)
2 1/2	9.0(2.7)	7.0(2.1)	12(305)
3	10(3.0)	7.0(2.1)	12(305)

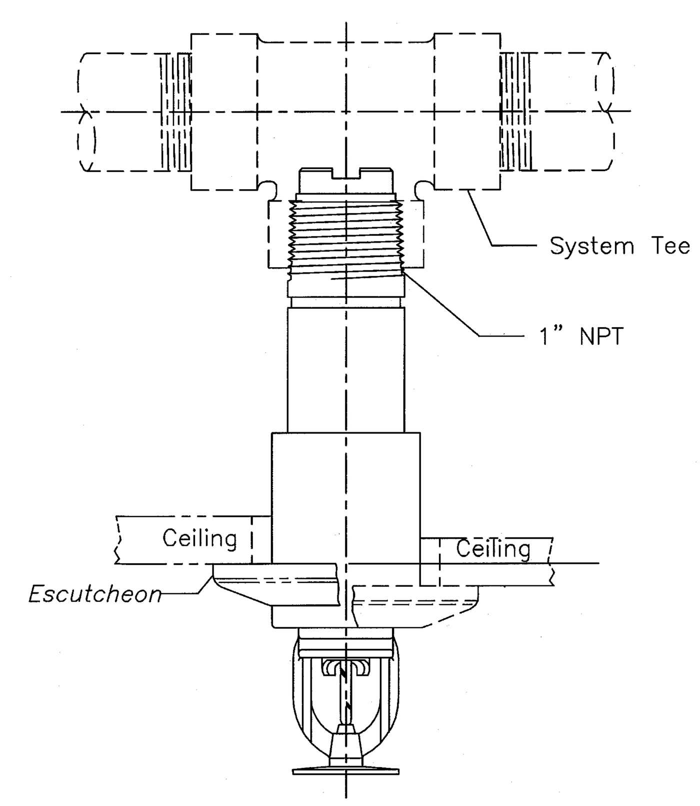

PENDENT SPRINKLER DETAIL

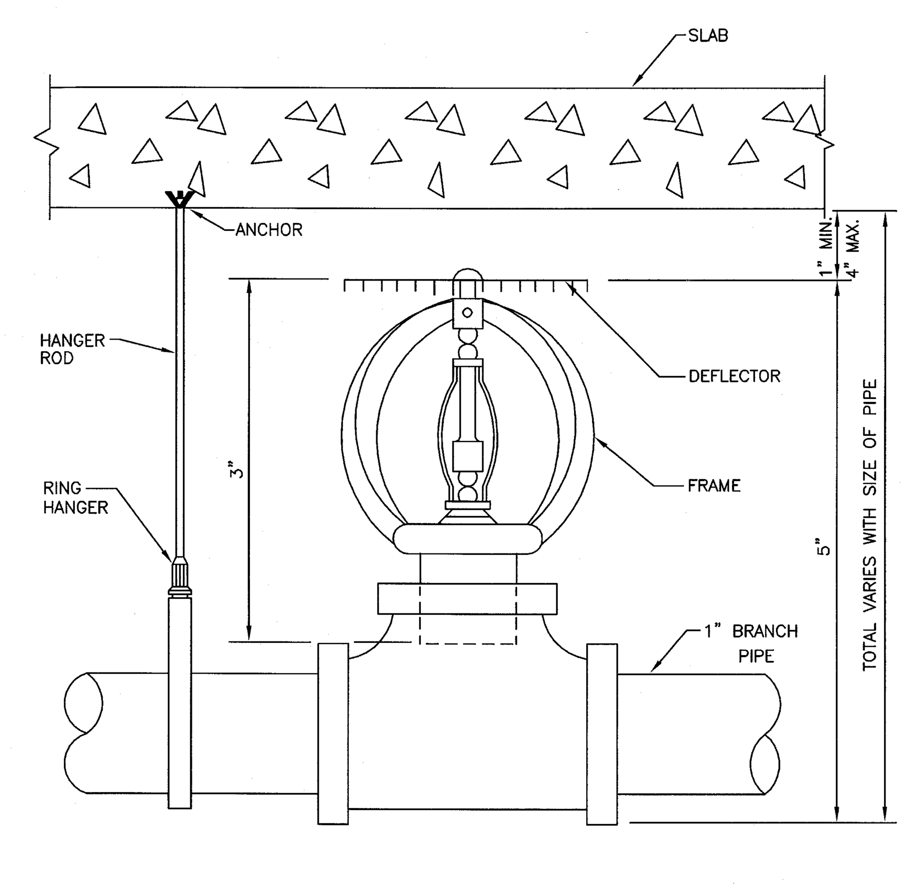

UPRIGHT HEAD DETAIL

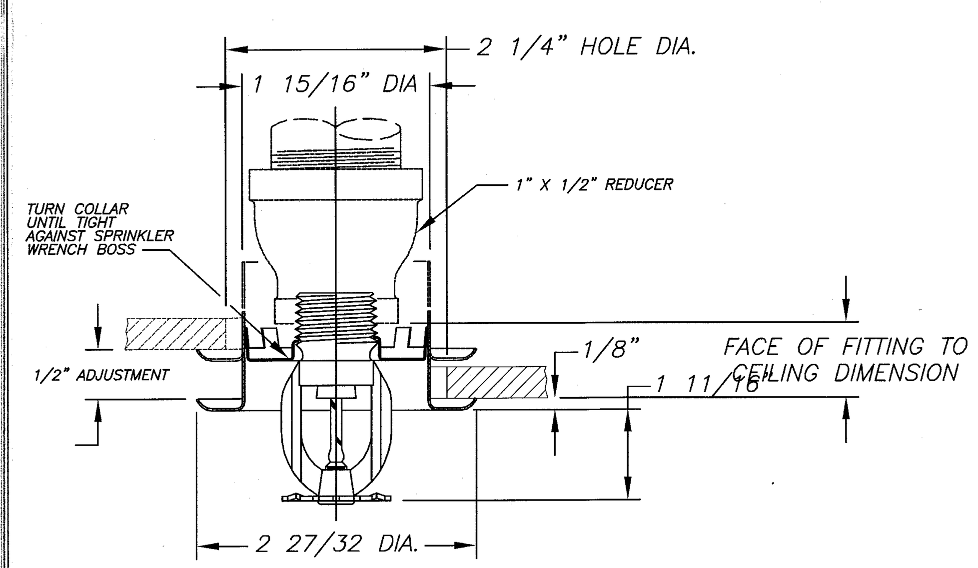

TYPICAL RECESSED PENDENT SPRINKLER DETAIL

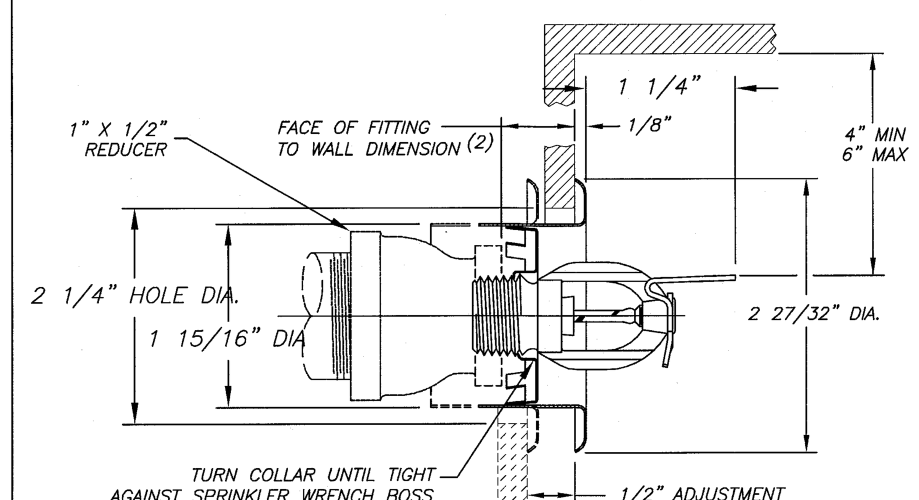

TYPICAL SIDEWALL SPRINKLER DETAIL

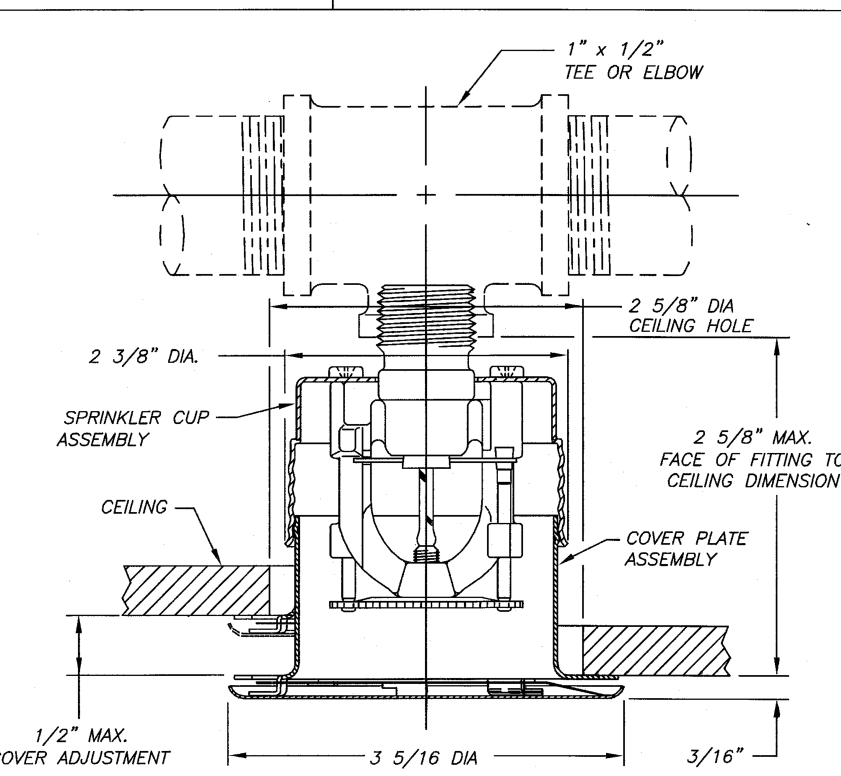

TYPICAL CONCEALED SPRINKLER DETAIL

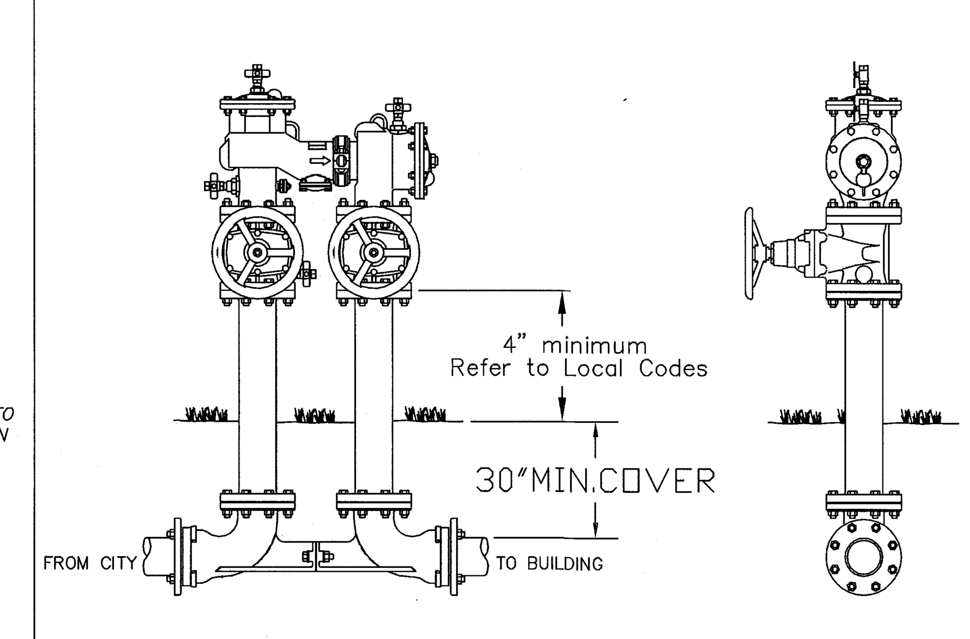

DOUBLE DETECTOR CHECK VALVE DETAIL

NTS

DDCHECK

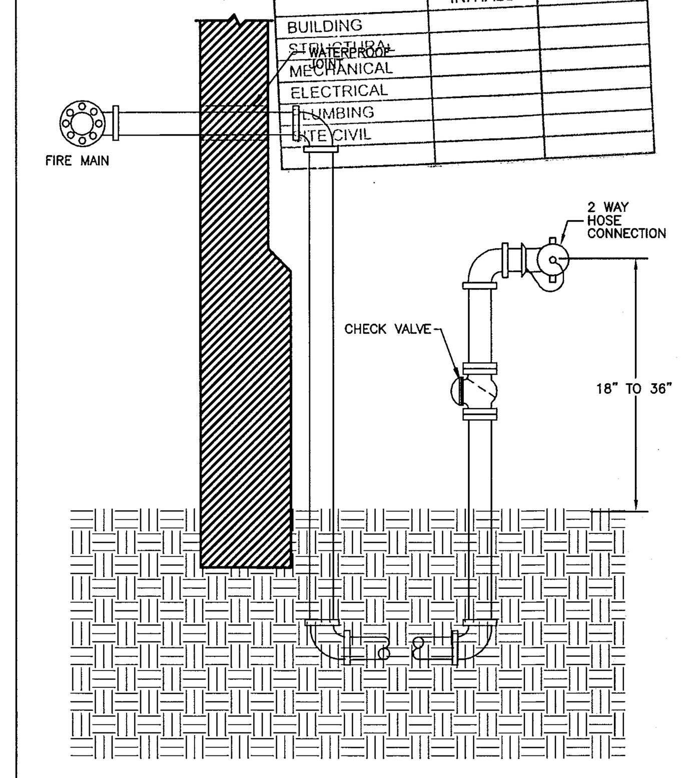

FREE STANDING SIAMESE CONNECTION

FIRE PROTECTION DETAILS & NOTES

NTS

FIRE SPRINKLER HEAD SCHEDULE

SYM	QNT	NAME	COVERAGE	METAL	TEMP	K	NPT	MFG.	MODEL & SIN #	ESCUT.	COAT (*)	CONN.
⊗	-	CONCEALED	16' X 16'	BRASS	165°	5.80	1/2"	VIKING	RESIDENTIAL VK474 ***	WHITE	WHITE	Thread
⊛	-	RECESSED	16' X 16'	BRASS	155°	5.80	1/2"	VIKING	RESIDENTIAL VK472 **	WHITE	CORROSSION RESISTANT	Thread
▷	-	EX. COVER. SIDEWALL	16' X 20'	BRASS	155°	4.20	1/2"	VIKING	RESIDENTIAL HSW FREEDOM VK450 **	WHITE	WHITE	Thread
⊳	-	SIDEWALL	STANDARD	BRASS	155°	5.60	1/2"	VIKING	M-5 VK305	CHROME	CHROME	Thread
▶	-	EX. COVER. SIDEWALL	16' X 22'	BRASS	155°	4.2	1/2"	VIKING	FREEDOM HSW VK450	WHITE	WHITE	Thread
○	-	UPRIGHT	STANDARD	BRASS	155°	5.60	1/2"	VIKING	M VK300	NO	CORROSSION RESISTANT	Thread
⊕	-	CONCEALED	STANDARD	BRASS	165°	8.00	1/2"	VIKING	HORIZON MIRAGE B-2 VK406	WHITE	WHITE	Thread
◎	-	RECESSED	STANDARD	BRASS	155°	5.60	1/2"	VIKING	M VK302	WHITE	WHITE	Thread

(*) COORDINATE FINISH WITH ARCHITECT

MAY 09 2014

STEVEN M. FELLER LICENSE No 22046 STATE OF FLORIDA PROFESSIONAL ENGINEER

APPROVED MIAMI BEACH FIRE DEPARTMENT

STEVEN FELLER P.E.,PL
FLORIDA P.E. Reg. # 22046
Certificate of Authorization # 00003427
500 N.E. THIRD AVENUE
FORT LAUDERDALE, FLORIDA 33301
PH: 954.467.1402 FAX: 954.467.5752
e-mail: fellerpe@fellerpe.com
JOB # 13153

HADDON HALL
1500 COLLINS AVE

MIAMI BEACH, FL

KEYPLAN N.T.S.

REVISIONS

NO.	DESCRIPTION	ISSUE DATE
1	PROGRESS TO 100% CD SET	02/07/14
4	FIRE REVIEW COMMENTS	04/04/14

100% CONSTRUCTION DOCUMENT SET

NORTH SEAL

Jonathan Cardello
Lic. # AR93391

ADD Inc Architecture Interiors Planning

One Biscayne Tower
Suite 1670
Two South
Biscayne Boulevard
Miami, Fl 33131
T. 305.482.8700
F. 305.482.8770
www.addinc.com
Lic. # AA26001507

Boston Miami

JOB NUMBER:	13036.00
CHECKED BY:	
ISSUE DATE:	MARCH 14, 2014
SCALE:	AS NOTED

SHEET TITLE

DETAILS & NOTES
FIRE PROTECTION

SHEET NUMBER

FP5.01

COPYRIGHT ADD INC 2011

File: E:\Haddon Hall\FP\...Details and Notes.dwg | Layout: Layout1
User: Guy Martinez | Date: Tuesday, May 6 2014 01:30:50 PM

ELECTRICAL NOTES:

(THIS PROJECT HAS BEEN DESIGNED USING THE 2008 EDITION OF THE NEC. & 2010 EDITION OF FBC.)

1. ALL CONDUCTORS SHALL BE COPPER, RATED 75 C WET/DRY EXCEPT WHERE OTHERWISE REQUIRED BY U.L. OR CODES, UON. MINIMUM WIRE SIZE SHALL BE #12 AWG. EXCLUDING CONTROL WIRING. ALUMINUM CONDUCTORS WILL BE PERMITTED FOR CONDUCTOR SIZES#3 AWG AND LARGER.
2. ALL CONDUIT RISERS SHALL BE RIGID GALVANIZED STEEL (RGS). WHERE CONDUIT BENDS UPWARD FROM UNDERGROUND TO ABOVE GROUND, USE AN APPROVED PVC TO RGS COUPLER, AS REQUIRED. RGS CONDUITS SHALL EXTEND A MINIMUM OF 18" BELOW GRADE.
3. UNLESS NOTED AS EXISTING, ALL EQUIPMENT, WIRING, DEVICES, ETC. SHALL BE NEW.
4. ENTIRE INSTALLATION SHALL BE IN ACCORDANCE WITH THE NATIONAL ELECTRICAL CODE, LATEST EDITION (NEC) AND THE LATEST EDITIONS OF ALL LOCAL CODES, RULES AND ORDINANCES HAVING JURISDICTION.
5. ALL CONDUIT RUNS ARE SHOWN DIAGRAMMATICALLY. EXACT ROUTING SHALL BE DETERMINED IN THE FIELD, UNLESS OTHERWISE NOTED.
6. ALL DISCONNECT SWITCHES SHALL BE SIZED BY NEC TO ACCOMMODATE EQUIPMENT SERVED, INCLUDING REQUIRED FUSES, UON. SWITCHES SHALL BE HORSE POWER RATED AND SIZED FOR 1/2 MAX. HORSEPOWER, HEAVY DUTY TYPE.
7. ALL ELECTRICAL EQUIPMENT SHALL BE RAINTIGHT WHERE EXPOSED TO THE WEATHER. ALL FLEX CONDUITS CONNECTED TO SUCH EQUIPMENT SHALL BE LIQUID TIGHT.
8. WIRE WAYS SHALL BE SIZED AS REQUIRED, PER NEC, UNLESS OTHERWISE NOTED (UON).
9. COORDINATE ALL ELECTRICAL SITE WORK WITH GENERAL CONTRACTOR.
10. FOR UNDERGROUND ELECTRICAL CONDUITS, PROVIDE PULL BOXES, SUCH THAT NO SINGLE CONDUIT RUN HAS BENDS IN EXCESS OF FOUR 90° BENDS. PULL BOXES SHALL BE SUITABLE AND APPROVED FOR THE INTENDED USE. WARNING TAPE WHICH SAYS "WARNING BURIED ELECTRIC" SHALL BE PLACED IN TRENCHES ABOVE ALL UNDERGROUND ELECTRIC CONDUITS. WHERE CONDUITS PASS UNDERNEATH PAVED AREAS, THEY SHALL BE RGS. WHERE UNDERGROUND CONDUITS ARE NOT EXPOSED TO MECHANICAL DAMAGE OR ARE NOT UNDER PAVED AREAS, THEY SHALL BE SCHEDULE 40 PVC. ALL CONDUIT RISERS SHALL BE RGS.
11. FOR TELEPHONE SYSTEM:
    A. PROVIDE GROUNDING FOR ALL TELEPHONE OUTLETS AND EQUIPMENT PER REQUIREMENTS OF TELEPHONE COMPANY.
    B. COORDINATE INSTALLATION OF ALL TELEPHONE OUTLETS, RACEWAYS, ENCLOSURES AND BACKBOARDS WITH TELEPHONE COMPANY.
    C. TELEPHONE CONDUITS SHALL NOT BE INSTALLED IN THE SAME TRENCH WITH POWER AND LIGHTING CONDUITS.
    D. MARK TERMINATIONS OF TELEPHONE CONDUITS AS DIRECTED BY TELEPHONE COMPANY.
    E. VERIFY LOCATION OF TELEPHONE SERVICE WITH TELEPHONE COMPANY, PRIOR TO SUBMITTING BID.
12. ALL CIRCUIT BREAKERS SHALL BE INVERSE TIME TYPE (THERMAL MAGNETIC). TWO AND THREE POLE CIRCUIT BREAKERS SHALL BE COMMON TRIP. NO TIE HANDLES PERMITTED.
13. ALL ELECTRICAL EQUIPMENT, DEVICES, WIRE, ETC., SHALL BE LISTED, FOR THE INTENDED USE, WITH UNDERWRITER'S LABORATORIES, INC. (UL), WHERE STANDARDS HAVE BEEN ESTABLISHED BY UL.
14. ALL CONDUCTORS SHALL BE IN CONDUITS. ALL CONDUITS SHALL BE INTERMEDIATE (IMC) OR RIGID GALVANIZED STEEL (RGS) EXCEPT THAT: (A) POLY VINYL CHLORIDE (PVC) CONDUITS MAY BE USED IN CONCRETE SLABS AND UNDERGROUND PROVIDED ELBOWS AND RISERS ARE RGS; (B) ELECTRICAL METALLIC TUBING (EMT) MAY BE USED IN OR ON WALLS OR CEILINGS WHERE NOT SUBJECT TO MECHANICAL DAMAGE, DAMP CONDITIONS OR CORROSIVE CONDITIONS; (C) LIQUID TIGHT FLEXIBLE CONDUIT WHERE REQUIRED; (D) FLEXIBLE METALLIC CONDUIT WHERE REQUIRED IN DRY LOCATIONS. ALL CONDUITS IN HAZARDOUS AREAS PER NEC SHALL MEET THE REQUIREMENTS OF NEC CHAPTER 5.
15. PROVIDE LAMPS WITH FIXTURES, VERIFY LAMP TYPE WITH MANUFACTURER.
16. COORDINATE ELECTRIC SERVICE WITH POWER COMPANY.
17. ELECTRICAL CONTRACTOR SHALL NOT SCALE DRAWINGS. CONTRACTOR SHALL REFER TO ARCHITECTURAL PLANS AND ELEVATIONS FOR EXACT LOCATIONS OF ALL EQUIPMENT UNLESS NOTED OTHERWISE.
18. ELECTRICAL CONTRACTOR SHALL VISIT THE JOB SITE AND VERIFY ALL CONDITIONS, LOCATIONS, DIMENSIONS AND COUNTS AS SHOWN AND/OR NOTED ON THE DRAWINGS. THIS SHALL INCLUDE ANY AND ALL FABRICATIONS PRIOR TO INSTALLATION.
19. IT SHALL BE THE RESPONSIBILITY OF THE ELECTRICAL CONTRACTOR FOR THE ADVANCED ORDERING OF LONG LEAD ITEMS, AS NOT TO INTERFERE WITH THE PRODUCTION OF OTHER TRADES RESULTING IN ANY DOWN OR LAG TIME.
20. IT SHALL BE THE RESPONSIBILITY OF THE ELECTRICAL CONTRACTOR TO PROVIDE ALL LABOR, MATERIALS AND SUPERVISION NECESSARY TO ACCOMPLISH THE WORK AS SHOWN AND/OR NOTED ON THE DRAWINGS.
21. IT SHALL BE UNDERSTOOD THAT ALL WORK PERFORMED SHALL BE DONE BY A LICENSED ELECTRICAL CONTRACTOR AND IN A FIRST-CLASS WORKMANLIKE MANNER. SAID CONTRACTOR SHALL MEET ALL REQUIREMENTS SET FORTH BY ANY LOCAL ORDINANCE AND GOVERNING AUTHORITIES.
22. THE ELECTRICAL CONTRACTOR SHALL BE RESPONSIBLE TO REPAIR TO ORIGINAL CONDITIONS ANY AND ALL DAMAGES TO BUILDING SURFACES, EQUIPMENT AND FURNISHINGS CAUSED DURING PERFORMANCE OF WORK.
23. THE ELECTRICAL CONTRACTOR SHALL KEEP ALL AREAS IN WHICH WORK IS BEING PERFORMED, FREE FROM DEBRIS AT ALL TIMES AND SAID AREAS SHALL BE LEFT BROOM CLEAN AT THE END OF EACH WORKING DAY.
24. IT SHALL NOT BE THE INTENT OF THESE PLANS AND/OR SPECIFICATION TO SHOW EVERY MINOR DETAIL OF CONSTRUCTION. THE ELECTRICAL CONTRACTOR SHALL BE EXPECTED TO FURNISH AND INSTALL ALL ITEMS FOR A COMPLETE ELECTRICAL SYSTEM AND PROVIDE ALL REQUIREMENTS NECESSARY FOR EQUIPMENT TO BE PLACED IN PROPER WORKING ORDER.
25. WHERE CORE DRILLING OF FLOOR/WALLS IS REQUIRED, CONTRACTOR SHALL SEAL OPENINGS WATERTIGHT AFTER UTILITIES HAVE BEEN INSTALLED. LOCATION OF CORED HOLES SHALL COORDINATE WITH LOCATION OF EQUIPMENT IN A MANNER TO BE CLEAN AND FUNCTIONAL. THE CONTRACTOR SHALL INSTALL ONLY ONE CONDUIT PER HOLE AND SEAL THE OPENING AROUND THE CONDUIT AS SPECIFIED.
26. ELECTRICAL CONTRACTOR SHALL VERIFY CIRCUIT PROTECTIVE DEVICE RATING FOR EQUIPMENT PRIOR TO CONSTRUCTION.
27. ALL FUSES SHALL BE CURRENT LIMITING, PER U.L., RATED 600V., UON.
    A. NONTIME DELAY FUSES IN MAIN SWITCHES AND SWITCHES FEEDING PANELS.
    B. TIME DELAY FUSES FOR MOTOR AND A/C CIRCUITS.
28. OUTLET BOXES SHALL BE PRESSED STEEL IN DRY LOCATIONS, CAST ALLOY WITH THREADED HUBS IN WET OR DAMP LOCATIONS AND SPECIAL ENCLOSURE FOR OTHER CLASSIFIED AREAS.
29. MOTOR STARTERS SHALL BE MANUAL OR MAGNETIC, AS INDICATED OR REQUIRED, WITH OVERLOAD RELAYS OR FUSES IN EACH HOT LEG.
30. FURNISH AND INSTALL DISCONNECT SWITCHES AND WIRING FOR AIR CONDITIONING SYSTEMS AS PER MANUFACTURER RECOMMENDATIONS. CONTROLS ARE TO BE SUPPLIED BY AIR CONDITIONING CONTRACTOR AND CONNECTED BY ELECTRICAL CONTRACTOR.
31. CONTRACTOR SHALL GUARANTEE ALL MATERIALS AND WORKMANSHIP FREE FROM DEFECTS FOR A PERIOD OF NOT LESS THAN ONE YEAR FROM DATE OF ACCEPTANCE, UNLESS INDICATED OR SPECIFIED OTHERWISE.
32. CORRECTION OF ANY DEFECTS SHALL BE COMPLETED WITHOUT ADDITIONAL CHARGE AND SHALL INCLUDE REPLACEMENT OR REPAIR OF ANY OTHER PHASE OF THE INSTALLATION WHICH MAY HAVE BEEN DAMAGED THEREBY.
33. ALL REQUIRED INSURANCE SHALL BE PROVIDED FOR PROTECTION AGAINST PUBLIC LIABILITY AND PROPERTY DAMAGE FOR THE DURATION OF THE WORK.
34. AS A MINIMUM, ALL EQUIPMENT SHALL MEET APPLICABLE STANDARDS, FOR THE TYPE OF EQUIPMENT AND INTENDED USE, OF THE FOLLOWING:
    A. AMERICAN NATIONAL STANDARDS INSTITUTE (ANSI)
    B. ILLUMINATING ENGINEERS SOCIETY (IES)
    C. AMERICAN SOCIETY FOR TESTING AND MATERIALS (ASTM)
    D. NATIONAL ELECTRICAL MANUFACTURER'S ASSOCIATES.(NEMA)

    NOTE: THESE STANDARDS ARE SUBORDINATE TO CODES AND STANDARDS SET BY U.L.
35. APPLY BITUMASTIC COATING TO ALL METALLIC CONDUITS IN SLABS OR UNDERGROUND.
36. ALL BALLASTS SHALL HAVE MINIMUM. POWER FACTOR OF 0.90. ALL BALLASTS FOR MERCURY VAPOR, METAL HALIDE AND HIGH PRESSURE SODIUM FIXTURES SHALL BE CONSTANT WATTAGE TYPE WITH +/-5% LAMP WATTS FOR +/-10% NOMINAL LINE VOLTAGE VARIATION.
37. ELECTRICAL CONTRACTOR SHALL SUBMIT (6 COPIES) EQUIPMENT LAYOUT OF ALL ELECTRICAL SPACES, ROOMS, ETC., TO ENGINEER FOR APPROVAL PRIOR TO ORDERING EQUIPMENT OR INSTALLING CONDUITS, ETC. LAYOUT SHALL CONSIST OF PLAN VIEWS (SCALED AT 1/2"=1'-0") AND ELEVATIONS (DIMENSIONED) FOR EACH SUCH SPACE, ROOM, ETC.
38. ALL CONNECTIONS TO GROUND RODS SHALL BE MADE WITH UL APPROVED WELDED CONNECTIONS, UNLESS NOTED OTHERWISE.
39. PROPER PLASTER RINGS SHALL BE USED WITH OUTLET BOXES. PLASTER RING SHALL BE A MAXIMUM OF 1/8" FROM THE FINISHED SURFACE OF THE DRYWALL AFTER DRYWALL IS INSTALLED. PROPER COORDINATION BETWEEN ELECTRICAL SUBCONTRACTOR AND GENERAL CONTRACTOR FOR PLASTER RING INSTALLATION WILL BE REQUIRED. NO "GOOF" RINGS WILL BE ALLOWED. ALL OUTLET BOXES SHALL BE SECURELY FASTENED. ANY AND ALL IMPROPERLY INSTALLED PLASTER RINGS OR OUTLET BOXES SHALL BE REMOVED AND A NEW RING OR OUTLET INSTALLED AT CONTRACTOR'S EXPENSE. NO GANGABLE BOXES WILL BE ACCEPTED.
40. ALL OPENINGS FOR LIGHT FIXTURES IN CEILINGS SHALL BE PROTECTED IN A MANNER (PER ALL GOVERNING CODES) THAT WILL PROVIDE THE SAME RATING AS THE CEILING. (THIS APPLIES TO ALL FIRE RATED CEILINGS).
41. PROVIDE FIRE RETARDANT U.L. APPROVED SEALANT ON ALL PENETRATIONS OF FIRE RATED PARTITIONS, WALLS AND STRUCTURAL SLABS. IT SHALL BE THE RESPONSIBILITY OF THE ELECTRICAL CONTRACTOR TO VERIFY, PRIOR TO SUBMITTING BID, LOCATIONS OF ALL SUCH FIRE RATED PARTITIONS, WALL AND STRUCTURAL SLABS.
42. ELECTRICAL CONTRACTOR SHALL SUBMIT (6 COPIES) EQUIPMENT CUTS FOR ALL SWITCH GEAR AND LIGHTING FIXTURES AS STATED IN LIGHTING FIXTURE AND EQUIPMENT SCHEDULES.
43. USE 3/4" EXTERIOR GRADE PLYWOOD BACKBOARDS FOR TELEPHONE TERMINAL BOARDS AND FOR SURFACE MOUNTING GROUPED ELECTRICAL EQUIPMENT, PAINTED ON BOTH SIDES AND EDGES WITH TWO COATS OF FLAT BLACK ASPHALT PAINT.
44. PROVIDE A FUSE HOLDER AND FUSE IN THE PRIMARY SIDE OF EACH UNDERGROUND CONDUCTOR FOR ALL BALLASTS (BUSSMAN HEB AND FNQ OR EQUAL), AT THE HAND HOLE OF EACH EXTERIOR POLE MOUNTED LIGHTING FIXTURE OR J BOX FOR WALL OR GROUND MOUNTED FIXTURE. 2
45. PROVIDE WIND LOAD RATED LIGHT POLES WITH (165 MPH MINIMUM WIND SPEED (ASCE 7), EXPOSURE C WITH IMPORTANCE FACTOR OF 1.0, AND PROVIDE PHOTOMETRICS WITH ALL FIXTURE SUBMITTALS.
46. CONTRACTOR TO VERIFY VOLTAGES OF ALL LIGHT FIXTURES PRIOR TO BIDDING RELATIVE TO THEIR SPECIFIC APPLICATION ON FLOOR PLANS. CONTRACTOR TO COORDINATE FIXTURES WITH ARCHITECTURAL DRAWINGS AND VERIFY APPROPRIATE CLEARANCES AND APPLICATION WITH ALL ARCHITECTURAL FINISHES PRIOR TO BIDDING.
47. A SEPARATE, DEDICATED AND SEPARATELY GROUNDED CIRCUIT WITH AN ISOLATED GROUNDED RECEPTACLE SHALL BE PROVIDED FOR ALL COMPUTER EQUIPMENT.
48. CONTRACTOR TO VERIFY AVAILABLE SERVICE VOLTAGE AND PHASES WITH F.P.&L PRIOR TO BID AND PROVIDE BID ALLOWANCE FOR ALTERNATES.
49. METER CANS, HUBS, & LUGS FOR SAME ARE TO BE FURNISHED & INSTALLED BY ELECTRICAL CONTRACTOR. ELECTRICAL CONTRACTOR TO VERIFY SPECIFIC TYPE OF METER CAN TO BE USED WITH F.P.L. PRIOR TO BID.
50. PROVIDE A 4" STEEL REINFORCED CONCRETE HOUSEKEEPING PAD UNDER ALL FLOOR MOUNTED SWITCHGEAR.
51. CONTRACTOR SHALL PROVIDE A TYPE WRITTEN DIRECTORY OF EACH PANEL SCH. INSIDE EACH PANEL BOARD. HAND WRITTEN DIRECTORY IS NOT ACCEPTABLE.

52.a SMOKE DETECTORS SHALL BE NO CLOSER THAN 36" FROM SUPPLY AIR DIFFUSERS.

52.b SMOKE ALARMS AND SMOKE DETECTOR SHALL NOT BE INSTALLED IN AN AREA OF EXCLUSION DETERMINED BY A 10 FT.(3.0m) RADIAL DISTANCE ALONG AN HORIZONTAL FLOW PATH FROM A STATIONARY OR FIXED APPLIANCE. SMOKE ALARMS AND SMOKE DETECTOR INSTALLED BETWEEN 10 FT. (3.0m) AND 20 FT. (6.1m) ALONG A HORIZONTAL FLOW PATH FROM A STATIONARY OR FIXED COOKING APPLIANCE SHALL BE EQUIPPED WITH AN ALARM-SILENCING MEANS OR USE PHOTOELECTRIC DETECTION.

52.C SMOKE ALARMS AND SMOKE DETECTORS SHALL NOT BE INSTALLED WITHIN A 36 IN.(910mm) HORIZONTAL PATH FROM A DOOR TO A BATHROOM CONTAINING A SHOWER OR TUB.

52.d SMOKE ALARMS AND SMOKE DETECTORS SHALL NOT BE INSTALLED WITHIN A 36 IN.(910mm) HORIZONTAL PATH FROM THE TIP OF THE BLADE OF A CEILING-SUSPENDED, (PADDLE), FAN.

53. ALL TRIM & TRIM PLATES IN HOTEL ROOMS & PUBLIC AREAS TO BE WHITE COLOR 'DECORA' TYPE OR APPROVED EQUAL.
54. EMT, ENT, IMC OR PVC IS PERMITTED AS APPROVED BY LOCAL CODES UTILITY COMPANIES & VENDOR SPECIFICATION.
55. 'MC' OR 'AC' CABLE FOR 15 OR 20 AMP BRANCH CIRCUIT IS PERMITTED IN ALL UNITS WHERE ALLOWED BY CODE.
56. ALL SMOKE DETECTORS WITHIN A HOTEL ROOM SHALL BE INTERCONNECTED SO THAT ALL SMOKE DETECTORS WITHIN THE HOTEL ROOM GO IN TO ALARM WHEN ONE SMOKE DETECTOR SENSES SMOKE.
57. ALL CIRCUITS INDICATED ON PANEL SCHEDULES AS 1 POLE CIRCUIT BREAKERS SHALL BE PROVIDED WITH A HOT AND A NEUTRAL CONDUCTOR . CIRCUITS INDICATED WITH A 2 POLE CIRCUIT BREAKER SHALL BE PROVIDED WITH 2 HOT CONDUCTORS AND A NEUTRAL CONDUCTOR. CIRCUITS THAT ARE INDICATED WITH A 3 POLE CIRCUIT BREAKER SHALL BE PROVIDED WITH 3 HOT CONDUCTORS AND 1 NEUTRAL CONDUCTOR. IF COMMON NEUTRALS ARE USED THE NEXT LARGER CONDUCTOR SIZE SHALL BE USED FOR THE NEUTRAL CONDUCTOR.
58. ALL SUPPLY FANS AND AIR HANDLERS THAT ARE SHOWN ON THE MECHANICAL DRAWINGS, THAT ARE RATED 2000 CFM AND LARGER SHALL BE FURNISHED WITH A DUCT SMOKE DETECTOR THAT SHALL BE WIRED TO THE FIRE ALARM PANEL
59. ALL FIRE SMOKE DAMPERS OR MOTORIZED DAMPERS SHOWN ON THE MECHANICAL DRAWINGS SHALL BE CONNECTED BOTH TO THE FIRE ALARM PANEL AND TO A 120 VOLT - 20 AMP EMERGENCY CIRCUIT IN THE NEAREST EMERGENCY PANEL
60. ALL FLOW AND TAMPER SWITCHES SHOWN ON THE FIRE SPRINKLER DRAWINGS SHALL BE CONNECTED TO THE FIRE ALARM PANEL
61. ALL RECEPTACLES IN BATHROOMS SHALL BE G.F.C.I PROTECTED.
62. CONTRACTOR SHALL SUBMIT SHOP DRAWINGS FOR EMERGENCY SWITCHGEAR TOGETHER WITH OVERCURRENT DEVICES SELECTIVITY STUDY FROM MANUFACTURER IN COMPLIANCE WITH NEC ART. 700.27.
63. THE FPL MAIN VAULT ROOM SHALL HAVE A 12' HIGH FLAT CONCRETE SLAB CEILING THROUGHOUT THE ENTIRE ROOM WITH NO DOWNTURN JOISTS OR BEAMS BELOW 12' AND NO PLUMBING OR FIRE SPRINKLER PIPING ENTERING THIS VAULT ROOM AT ANY LEVEL OR ALONGSIDE ANY INTERIOR WALL OF THIS ROOM.THE WALLS OF THIS FPL VAULT ROOM MUST BE 8" CONCRETE BLOCK WITH CEMENT FILLED CELLS. THE FLOORS OF THIS ROOM MUST BE A MINIMUM OF A 6" CONCRETE SLAB. ANY DEVIATION TO THIS MUST BE APPROVED IN WRITING BY FPL OTHERWISE THE CONTRACTOR IS RESPONSIBLE TO ADHERE TO THESE FPL STANDARDS.
64. PROVIDE 4" CONCRETE CURB AROUND ALL BUS DUCT AS PER NEC. 368.6
65. ALL DISCONNECT SWITCHES INDICATED AS W.P. ARE NEMA 3R TYPE. ALL THE OTHER DISCONNECT SWITCHES LOCATED INSIDE THE BUILDING ARE NEMA 1 TYPE (TYP)
66. PROVIDE A FLOAT SWITCH AT THE BOTTOM OF EACH ELEVATOR SHAFT THAT DISCONNECTS POWER TO THE ELEVATOR MOTOR IF THE WATER IN THE PIT EXCEEDS 6" AFF. (TYPICAL FOR ALL ELEVATOR PIT)
67. CODING: 120/208V

    PHASE: 'A' - BLACK; 'B' - RED; 'C' - BLUE; 'N' - WHITE; 'G' - GREEN
68. CONTRACTOR SHALL SUBMIT SHOP DRAWINGS FOR EMERGENCY SWITCHGEAR TOGETHER WITH OVERCURRENT DEVICES SELECTIVITY STUDY FROM MANUFACTURER IN COMPLIANCE WITH NEC ART. 700.27.
69. THE CONTRACTOR SHALL FURNISH AND INSTALL UL LISTED EXPANSION TYPE FITTINGS IN COMPLIANCE WITH NEC 300.7 (B) AND 250.98. ON ALL CONDUITS PASSING THROUGH EXPANSION JOINTS AS DESIGNATED ON THE STRUCTURAL PLANS.
70. THE CONTRACTOR SHALL FURNISH AND INSTALL PADLOCKING TYPE CIRCUIT BREAKER MECHANISMS ON ALL CIRCUIT BREAKERS WITHIN THE DWELLING UNIT OR HOTEL GUESTROOM PANEL THAT ALLOW CIRCUIT BREAKERS SERVING ALL COOKING APPLIANCES TO BE LOCKED IN THE OFF POSITION AS DESCRIBED IN NEC 422.31 (B). 2
71. BUILDING LIGHTING SHALL COMPLY WITH FBC-EC CHAPTER 5 ENERGY REQUIREMENTS FOR HIGH EFFICACY LUMINARIES AND REQUIRED LIGHTING CONTROL IN COMMON AREAS.
72. ALL HOTEL GUESTROOM NON-LOCKING TYPE 125V, 15 AND 20 AMPS RECEPTACLES SHALL BE LISTED TAMPER RESISTANT. 12
73. BUILDING IS NON-RESIDENTIAL LIGHTING COMPLIES WITH 2010FBC-ENERGY CODE 505.5 INTERIOR LIGHTING REQUIREMENTS.
74. ALL RECEPTACLES EXPOSED TO WEATHER SHALL BE LISTED WEATHER RESISTANT. AS PER NEC 406.9.

ELECTRICAL SYMBOL LEGEND

SYMBOL	DESCRIPTION
⬡	LIGHTING FIXTURE IDENTIFICATION
⊡	POLE MOUNTED SITE LIGHT FIXTURE
▭	FLUORESCENT LIGHT FIXTURE
○	DOWN LIGHT
◑	EMERGENCY DOWN LIGHT
◇	WALL WASHER LIGHT FIXTURE
○	WALL MOUNTED LIGHT FIXTURE
◑	WALL MOUNTED LIGHT FIXTURE ON EMERGENCY
⊢o⊣	FLUORESCENT STRIP
	LANDSCAPE LIGHT FIXTURE
	EXIT LIGHT
	EMERGENCY BATTERY PACK
	FLUORESCENT LIGHT FIXTURE ON EMERGENCY OR NIGHT LIGHT CIRCUIT
◔	DOWN LIGHT ON EMERGENCY OR NIGHT LIGHT CIRCUIT
	DUPLEX RECEPT - 20 AMP (18" A.F.F.)
	SINGLE RECEPT - 20 AMP (18" A.F.F.)
	DUPLEX RECEPT CONTROLLED VIA WALL SWITCH. - 20 AMP (18" A.F.F.)
	DUPLEX RECEPT MOUNTED ABOVE COUNTER - 20 AMP (42" A.F.F.)
	DUPLEX RECEPT FLUSH FLOOR MOUNTED - 20 AMP
	2 POLE/3 WIRE + GROUND RECEPTACLE 250V AC.
	QUAD - PLEX RECEPT - 20 AMP (18" A.F.F.)
S	SINGLE POLE SWITCH - 20 AMP (48" A.F.F.)
S_2	TWO POLE SWITCH - 20 AMP (48" A.F.F.)
S_3	THREE WAY SWITCH - 20 AMP (48" A.F.F.)
S_4	FOUR WAY SWITCH - 20 AMP (48" A.F.F.)
S_{DM}	MAGNETIC DIMMER SWITCH 2000 WATTS MAX (48" A.F.F.)
S_D	DIMMER SWITCH 2000 WATT MAX (48" A.F.F.)
S_F	FAN SPEED CONTROL (48" A.F.F.)
S_K	KEY OPERATED SWITCH - 20 AMP (48" A.F.F.)
S_P	SINGLE POLE SWITCH WITH PILOT LIGHT - 20 AMP (48" A.F.F.)
	JUNCTION BOX
⊠	CONTACTOR OR STARTER
3 100	FUSIBLE DISCONNECT (SWITCH POLES, AMPS AND FUSES AS SHOWN)
S_M	MOTOR RATED SWITCH (WITH OVERLOADS)
	ELECTRICAL PANELBOARD
T	THERMOSTAT
	MOTOR
	3 POLE/4 WIRE + GROUND RECEPTACLE 250V AC.
T	LOW VOLTAGE LIGHTING TRANSFORMER
	CIRCUIT HOME RUN TO PANELBOARD OR OTHER DEVICE AS INDICATED BY PLANS
	FLEXIBLE CONDUIT
	CONDUIT CONCEALED IN FLOOR
	CONDUIT CONCEALED
	GROUNDING ELECTRODE & CONDUCTOR SYSTEM
TV	TELEVISION OUTLET (18" A.F.F.)
▼	TELEPHONE OUTLET (18" A.F.F.)
▽	TELEPHONE OUTLET - FLUSH FLOOR MOUNTED
▼P	PUBLIC TELEPHONE (48" A.F.F.)
▼	TWO CAT-6 DATA OUTLETS. MOUNTING HEIGHT AS PER ID DRAWINGS.
	FLOOR MOUNT TWO CAT-6 PORTS DATA OUTLET
M	MOTORIZED DAMPER
S	SPEAKER - CEILING MOUNTED
H	HEAT DETECTOR (135 DEGREES FT/RR)
S_D	DUCT SMOKE DETECTOR
S_S	SMOKE DETECTOR (PHOTOELECTRIC TYPE)
F	FIRE ALARM SPEAKER
L	FIRE ALARM FLASHING STROBE LIGHT (80" TO BOTTOM)
H	FIRE ALARM HORN (80" TO BOTTOM)
H	FIRE ALARM HORN WITH FLASHING STROBE LIGHT (80" TO BOTTOM)
F_S	TAMPER SWITCH
F_S	FLOW SWITCH
	FIREMEN'S PHONE JACK
SK_3	3-POSITION KEY OPERATED SWITCH (48" A.F.F.)
J-H	WALL MOUNTED JUNCTION BOX
	FLOOR MOUNTED SPECIAL OUTLET. ELECTRICAL CONTRACTOR SHALL PROVIDE NEMA CONFIGURATION SA REQUIRED BY EQUIPMENT.
T	THERMOSTAT
	BRANCH CIRCUIT HOME RUN CONCEALED IN CEILING WALL OR CONCRETE SLAB.
	BRANCH CIRCUIT HOME RUN UNDERGROUND.
A.F.F.	ABOVE FINISHED FLOOR
W.P.	WEATHERPROOF EQUIPMENT
MTD.	MOUNTED
TYP.	TYPICAL
GND.	GROUND
J.B.	JUNCTION BOX
N.T.S.	NOT TO SCALE
A.H.U.	AIR HANDLING UNIT
EMT	ELECTRIC METALLIC TUBING
GFI/GF.C.I.	GROUND FAULT CIRCUIT INTERUPTER
A.T.S.	AUTOMATIC TRANSFER SWITCH

ELECTRICAL DRAWING INDEX

DWG. No.	DRAWING DESCRIPTION
	FLOOR PLANS - (SCALE: 3/32"=1'-0")
E0.00	ELECTRICAL GENERAL NOTES AND SYMBOLS LEGEND
E0.01	BASEMENT ELECTRICAL DEMOLITION PLAN
E0.02	GROUND LEVEL ELECTRICAL DEMOLITION PLAN
E0.03	SECOND LEVEL ELECTRICAL DEMOLITION PLAN
E0.04	THIRD LEVEL ELECTRICAL DEMOLITION PLAN
E1.00	ELECTRICAL SITE PLAN
E1.01	BASEMENT ELECTRICAL PLAN
E1.02	GROUND LEVEL LIGHTING PLAN
E1.02A	GROUND LEVEL POWER PLAN
E1.03	SECOND LEVEL ELECTRICAL PLAN
E1.04	THIRD LEVEL ELECTRICAL PLAN
E1.05	ROOF LEVEL ELECTRICAL PLAN
	FLOOR PLANS - (SCALE: 1/4"=1'-0")
E2.01	ENLARGED TYPICAL GUESTROOMS ELECTRICAL PLAN
E2.02	ENLARGED TYPICAL GUESTROOMS ELECTRICAL PLAN
E2.03	ENLARGED TYPICAL GUESTROOMS ELECTRICAL PLAN
E2.04	ENLARGED TYPICAL GUESTROOMS ELECTRICAL PLAN
E2.05	ENLARGED TYPICAL GUESTROOMS ELECTRICAL PLAN
E2.06	ENLARGED TYPICAL GUESTROOMS ELECTRICAL PLAN
E2.07	ENLARGED TYPICAL GUESTROOMS ELECTRICAL PLAN
E2.08	ENLARGED TYPICAL GUESTROOMS ELECTRICAL PLAN
E2.09	ENLARGED TYPICAL GUESTROOMS ELECTRICAL PLAN
E2.10	ENLARGED KITCHEN/BARS ELECTRICAL PLAN
	FLOOR PLANS - (SCALE: 1/2"=1'-0") 1
E2.11	ENLARGED ELECTRICAL ROOMS
	RISER DIAGRAMS/PANELS - (SCALE: N.T.S.)
E3.01	ELECTRICAL RISER DIAGRAM
E3.02	ELECTRICAL PANEL SCHEDULES
E3.03	ELECTRICAL PANEL SCHEDULES
E3.04	ELECTRICAL PANEL SCHEDULES

LEGEND NOTES:

1.- THESE ARE STANDARD SYMBOLS AND MAY NOT ALL APPEAR ON THE PROJECT DRAWINGS, HOWEVER THE SYMBOL ON PROJECT DRAWINGS OCCURS, THE ITEMS SHALL BE PROVIDED AND INSTALLED UNLESS OTHERWISE NOTED.
2.- REFER TO DRAWINGS SOECIFIC NOTES AND COMMENTS FOR SYMBOLS NOT INCLUDED ON THIS LIST.
3.- PROVIDE MEANS FURNISH AND INSTALL.
4.- REFER TO MECHANICAL DRAWINGS FOR EQUIPMENT'S LOCATION AND ELECTRICAL REQUIREMENTS AND PROVIDE ACCORDINGLY.
5.- ALL SWITCHES SHALL BE GANGED WHERE TWO (2) OR MORE ARE INSTALLED AT THE SAME LOCATION.
6.- ALL WIRING DEVICES (SWITCHES, RECEPTACLES, DIMMERS, TELEPHONE, CABLE TELEVISION, ETC.) SHALL BE LEVITON RESIDENTIAL GRADE DECORA STYLE FOR APARTMENTS DEVIDES TO BE COLOR WHITE. FOR OTHER AREAS NOT MENTIONED ABOVE, DEVICES SHALL BE HUBBELL SPECIFICATION GRADE, SUITABLE FOR THE LOCATION IN WHICH THEY ARE GOING TO BE USED. PROVIDE TAYMAC COVERS FOR OUTDOOR USE.
7.- EVERY BRANCH CIRCUIT SHALL INCLUDE GROUND CONDUCTOR IN ADDITION TO THE REQUIRED NEUTRAL AND PHASE CONDUCTORS.

BACK OF HOUSE LIGHTING FIXTURE SCHEDULE

TYPE	MANUFACTURER	CATALOG NUMBER	LAMPS		VOLTS	INPUT WATTS	MOUNTING	REMARKS
			Qty	Type				
A	DAYBRITE	DWAE232-1/2EB-UNV	2	F032T8-35K	120	60	SURFACE	4' FIBERGLASS FLUORESCENT
B	DAYBRITE	2DPG/F332-FA12-1/2EB-UNV	3	F032T8-35K	120	90	RECESSED	2'X4' LENSED TROFFER
C	INFINITY	PH60-226Q-EB-BH-UNV	2	PL26DTT-35K	120	60	RECESSED	COMPACT FLUORESCENT DOWNLIGHT
D	DAYBRITE	VFN-26-C-U-WLP-PG	1	PL26DTT-35K	120	30	WALL	ELEVATOR PIT LIGHT
E	LUMINAIRE	ARV13HO-2PLT42-CP-WHT-UNV	2	PLT42-35K	120	90	WALL	ROOF WALL PACK
F	DAYBRITE	T232-1/2EB-UNV	2	F032T8-35K	120	60	SURFACE	4' FLUORESCENT STRIP
EM	BEGHELLI	BBY	2	INCL	120	12	WALL	2 HEAD EMERGENCY LIGHT
X1	BEGHELLI	FORTENZA SERIES	1	LED	120	.5	UNIVERSAL	EXIT SIGN-WET LOCATION

FOR ALL OTHER LIGHT FIXTURES REFER TO INTERIOR DESIGNER AND LANDSCAPE ARCHITECT LIGHTING FIXTURES SCHEDULE.

PROVIDE EQUIPMENT GROUNDING CONDUCTOR FOR ALL RACEWAYS AS PER 2008 NEC TABLE 250.122.

MTCI PRIVATE PROVIDER SERVICES, LLC
Florida Statute Plans Review, Inspections, Testing & Certification

12	REVIEWER INITIALS	DATE REVIEWED
BUILDING		
STRUCTURAL		
MECHANICAL		
ELECTRICAL	TDC.	11-10-14
PLUMBING		
SITE CIVIL		

ELECTRICAL GENERAL NOTES AND S

ELECTRICAL DEMOLITION NOTES:

1. WITHIN THE AREA IDENTIFIED, CONTRACTOR SHALL DISCONNECT AND REMOVE ALL EXISTING ELECTRICAL DEVICES AND EQUIPMENT, AND REMOVE ALL UNUSED CONDUIT AND WIRING BACK TO NEXT ACTIVE OUTLET. EXISTING CIRCUIT ASSOCIATED WITH THIS SHALL BE REUSED FOR NEW INSTALLATION IN RESPECTIVE PNLS. WHERE CONDUIT IS INACCESSIBLE, REMOVE CONDUCTORS AND CUT BACK CONDUIT FLUSH WITH SLAB OR WALL. PATCH OPENINGS TO MATCH EXISTING FINISHES. WHERE EXISTING WIRING EXTENDS OUTSIDE OF THE AREA BY NATURE OF THE ORIGINAL INSTALLATION, CONTRACTOR SHALL MODIFY EXISTING WIRING AS REQUIRED TO MAINTAIN CONTINUITY OF EXISTING CIRCUITRY SUCH THAT NO EQUIP. TO REMAIN IS LEFT WITHOUT SERVICE. (CONTRACTOR SHALL NOT SERVICE TO ELECTRICAL EQUIPMENT AND DEVICES TO REMAIN).
2. ALL REMOVED ITEMS SHALL BE DISCARDED APPROPRIATELY.
3. THE CONTRACTOR SHALL VISIT THE SITE AND EXAMINE THE EXISTING CONDITIONS PRIOR TO COMMENCING WORK AND SHALL NOTIFY THE ARCHITECT AND/OR ENGINEER IF AN EXISTING CONDITION PREVENTS HIM FROM ACCOMPLISHING THE WORK INDICATED AND INTENDED BY THESE DRAWINGS.
4. PRIOR TO BID, THE EXTENT AND UNDERSTANDING OF THE WORK TO BE PERFORMED SHALL BE CLEARLY ESTABLISHED SUCH THAT NO ADDITIONAL COSTS WILL BE INCURRED. ANY WORK, OTHER THAN AS DESCRIBED ON THESE DRAWINGS REQUIRED TO PROVIDE AND INSTALL ANY ITEM OR SYSTEMS SHALL BE QUALIFIED WITH THE BID.
5. PRIOR TO COMMENCING WORK, CONTRACTOR SHALL DISCONNECT POWER IN THE DEMOLITION AREA INCLUDING POWER FOR THE LOW-VOLTAGE SYSTEMS SUCH AS FIRE ALARM, CONTROL WIRING, ETC.
6. CONTRACTOR SHALL EXERCISE EXTREME CAUTION DURING DEMOLITION WORK. EXISTING FEEDERS AND PANELS ARE SHOWN SCHEMATIC FOR REFERENCE PURPOSES ONLY. CONTRACTOR SHALL VERIFY IN FIELD ROUTING OF ALL EXISTING FEEDERS PRIOR TO DEMOLITION.
7. CONTRACTOR SHALL PROVIDE TEMPORARY POWER WHERE REQUIRED DURING DEMOLITION AND CONSTRUCTION SCOPE OF WORK.
8. ALL WORK SHALL BE PERFORMED BY A LICENSED ELECTRICAL CONTRACTOR AND SHALL BE COORDINATED WITH OTHER TRADES.
9. CONTRACTOR SHALL PROVIDE ALL REQUIRED INSURANCE FOR PROTECTION AGAINST PUBLIC LIABILITY FOR THE DURATION OF THE WORK.
10. CONTRACTOR SHALL PAY FOR THE PERMITS, FEES & INSPECTIONS.

SCOPE OF WORK:

1-DISCONNECT AND UNINSTALL ALL EXISTING DISCONNECTS AT EXTERIOR SOUTH WALL OF HADDON HALL HOTEL BY POINT OF SERVICE.
2-REMOVE ALL EXISTING PANELS AT BASEMENT LEVEL IN EXISTING STORAGE ROOMS.
3-CUT ALL REMOVED PANELS BRANCH FEEDERS AND TERMINATE INTO A NEW AUXILIARY GUTTER. CONTINUE ALL EXISTING RACEWAYS FROM NEW GUTTER TO NEW PANELS LOCATED AT NEW ELECTRICAL ROOM.
4-REMOVE EXISTING PANELS FEEDING HVAC AND STOVE CIRCUITS FOR THE GUESTROOMS. CAP DEAD AND ABANDON ALL ASSOCIATED FEEDERS.
5-CAP DEAD AND ABANDON ALL CIRCUITS FEEDING THE EXISTING GUESTROOM'S A/C UNITS AND STOVES.
6-RE-ROUTE EXISTING LIGHTING AND RECEPTACLE CIRCUITS FROM REMOVED PANELS TO NEW PANELS INDICATED IN DRAWING E1.01

1

EXISTING GUESTROOM'S A/C PANEL TO BE REMOVED.

EXISTING PANELS TO BE REMOVED. LIGHTING AND RECEPTACLES CIRCUITS TO BE RELOCATED TO NEW PANELS AT NEW ELECTRICAL ROOM.

EXISTING GUESTROOM A/C AND KITCHENET EQUIPMENT PANELS TO BE REMOVED.

EXISTING 600 AMP, 3 POLES, ENCLOSED CB, SERVICE DISCONNECT TO BE REMOVED.

EXISTING 800 AMP, 3 POLES, ENCLOSED CB, SERVICE DISCONNECT TO BE REMOVED.

EXISTING FPL CO. TRANSFORMER VAULT (COORDINATE WITH FPL REP. FOR NEW SERVICE)

INACCESSIBLE
STORAGE
CORRIDOR
LINEN ROOM
ROOM
CLOSET
CLG.
WC
CRAWL SPACE
ELEVATOR
EXISTING SUMP
LANDSCAPED AREA
ALLEYWAY
WASHINGTON AVE.
COLLINS AVE.

MAY 09 2014

STEVEN M. FELLER LICENSED No. 22046 STATE OF FLORIDA PROFESSIONAL ENGINEER

APPROVED MIAMI BEACH FIRE DEPARTMENT

BASEMENT DEMOLITION PLAN

SCALE: 3/32"=1'-0"

STEVEN FELLER P.E.,PL
FLORIDA P.E. Reg. # 22046
Certificate of Authorization # 00003427
500 N.E. THIRD AVENUE
FORT LAUDERDALE, FLORIDA 33301
PH: 954.467.1402 FAX: 954.467.5752
e-mail: fellerpe@fellerpe.com
JOB # 13153

HADDON HALL
1500 COLLINS AVE
MIAMI BEACH, FL

KEYPLAN N.T.S.

REVISIONS

NO.	DESCRIPTION	ISSUE DATE
1	100% CD COORD. REVISION	2-18-14

100% CONSTRUCTION DOCUMENT SET

NORTH SEAL

Jonathan Cardello
Lic. # AR93391

ADD Inc Architecture Interiors Planning

One Biscayne Tower
Suite 1670
Two South
Biscayne Boulevard
Miami, Fl 33131
T. 305.482.8700
F. 305.482.8770
www.addinc.com
Lic. # AA26001507

Boston Miami

MCI PRIVATE PROVISION SERVICES, LLC
Construction Plans Review, Inspection, Testing & Special Duty

	REVIEWER INITIALS	DATE REVIEWED
BUILDING		
STRUCTURAL		
MECHANICAL		
ELECTRICAL	TDC	4-16-14
PLUMBING		
SITE CIVIL		

JOB NUMBER:	13036.00
CHECKED BY:	
ISSUE DATE:	MARCH 14, 2014
SCALE:	AS NOTED

SHEET TITLE

BASEMENT DEMOLITION PLAN

SHEET NUMBER

E0.01

COPYRIGHT ADD INC 2011

Plot: Fri, May 09, 2014 - 2:47:30pm, Drawing: P:\13036.00 Haddon Hall\Drawings\Revit\E0.01 Basement Demolition Plan.rvt

SCOPE OF WORK:

1- DISCONNECT AND UNINSTALL ALL EXISTING DISCONNECTS AT EXTERIOR SOUTH WALL OF CAMPTON APARTMENTS BUILDING BY POINT OF SERVICE.
2- REMOVE ALL EXISTING METER STACKS AND TERMINATE LOAD SIDE FEEDERS IN A NEW NEMA 3R AUXILIARY GUTTER.
3- DISCONNECT AND UNINSTALL MAIN SERVICE DISCONNECT AND ALL EXISTING DISCONNECTS AT EXTERIOR EAST WALL OF POOL SUITES BUILDING AT POINT OF SERVICE. BUILDING TO BE DEMOLISHED.
4- FOR PANELS 'B' AND 'C' UNINSTALL ALL CIRCUITS FEEDING EXISTING GUESTROOMS WALL A/C UNITS. RE-ROUTE CIRCUITS REMAINING AS INDICATED IN CONSTRUCTION DOCUMENTS.
5- UNINSTALL ALL CIRCUITS FEEDING EXISTING A/C UNITS. RECONNECT CIRCUITS AS PER NEW REMODELING CONSTRUCTION DOCUMENTS PANEL SCHEDULES.
6- REMOVE EXISTING PANEL(S) SERVING CAMPTON BUILDING ROOMS LOCATED IN TO BE DEMOLISHED WALLS AND RELOCATE TO PROPOSED NEW LOCATION AS PER CONSTRUCTION DOCUMENTS.
7- PANEL EXISTING TO REMAIN.
8- EXISTING POOL SUITES BUILDING TO BE PARTIALLY DEMOLISHED. 7
9- REMOVE ALL SURFACE MOUNTED ELECTRICAL CONDUIT AT EXTERIOR COURTYARD.

1

ELECTRICAL DEMOLITION NOTES:

1. WITHIN THE AREA IDENTIFIED, CONTRACTOR SHALL DISCONNECT AND REMOVE ALL EXISTING ELECTRICAL DEVICES AND EQUIPMENT, AND REMOVE ALL UNUSED CONDUIT AND WIRING BACK TO NEXT ACTIVE OUTLET. EXISTING CIRCUIT ASSOCIATED WITH THIS SHALL BE REUSED FOR NEW INSTALLATION IN RESPECTIVE PNLS. WHERE CONDUIT IS INACCESSIBLE, REMOVE CONDUCTORS AND CUT BACK CONDUIT FLUSH WITH SLAB OR WALL. PATCH OPENINGS TO MATCH EXISTING FINISHES. WHERE EXISTING WIRING EXTENDS OUTSIDE OF THE AREA BY NATURE OF THE ORIGINAL INSTALLATION, CONTRACTOR SHALL MODIFY EXISTING WIRING AS REQUIRED TO MAINTAIN CONTINUITY OF EXISTING CIRCUITRY SUCH THAT NO EQUIP. TO REMAIN IS LEFT WITHOUT SERVICE. (CONTRACTOR SHALL NOT SERVICE TO ELECTRICAL EQUIPMENT AND DEVICES TO REMAIN).
2. ALL REMOVED ITEMS SHALL BE DISCARDED APPROPRIATELY.
3. THE CONTRACTOR SHALL VISIT THE SITE AND EXAMINE THE EXISTING CONDITIONS PRIOR TO COMMENCING WORK AND SHALL NOTIFY THE ARCHITECT AND/OR ENGINEER IF AN EXISTING CONDITION PREVENTS HIM FROM ACCOMPLISHING THE WORK INDICATED AND INTENDED BY THESE DRAWINGS.
4. PRIOR TO BID, THE EXTENT AND UNDERSTANDING OF THE WORK TO BE PERFORMED SHALL BE CLEARLY ESTABLISHED SUCH THAT NO ADDITIONAL COSTS WILL BE INCURRED. ANY WORK, OTHER THAN AS DESCRIBED ON THESE DRAWINGS REQUIRED TO PROVIDE AND INSTALL ANY ITEM OR SYSTEMS SHALL BE QUALIFIED WITH THE BID.
5. PRIOR TO COMMENCING WORK, CONTRACTOR SHALL DISCONNECT POWER IN THE DEMOLITION AREA INCLUDING POWER FOR THE LOW-VOLTAGE SYSTEMS SUCH AS FIRE ALARM, CONTROL WIRING, ETC.
6. CONTRACTOR SHALL EXERCISE EXTREME CAUTION DURING DEMOLITION WORK. EXISTING FEEDERS AND PANELS ARE SHOWN SCHEMATIC FOR REFERENCE PURPOSES ONLY. CONTRACTOR SHALL VERIFY IN FIELD ROUTING OF ALL EXISTING FEEDERS PRIOR TO DEMOLITION.
7. CONTRACTOR SHALL PROVIDE TEMPORARY POWER WHERE REQUIRED DURING DEMOLITION AND CONSTRUCTION SCOPE OF WORK.
8. ALL WORK SHALL BE PERFORMED BY A LICENSED ELECTRICAL CONTRACTOR AND SHALL BE COORDINATED WITH OTHER TRADES.
9. CONTRACTOR SHALL PROVIDE ALL REQUIRED INSURANCE FOR PROTECTION AGAINST PUBLIC LIABILITY FOR THE DURATION OF THE WORK.
10. CONTRACTOR SHALL PAY FOR THE PERMITS, FEES & INSPECTIONS.

POOL
POOL

POOL SUITES

SEE SCOPE OF WORK NOTE 8.

UNIT 404 UNIT 403 UNIT 402 UNIT 401

EXISTING 5-60 AMPS AND 2-100 AMPS FUSED MAIN, 1ϕ METERS TO BE REMOVED.

EXISTING 200 AMPS, 240/120 VOLTS 1ϕ, 3 WIRES FPL SERVICE DROP FOR POOL SUITES BUILDING TO BE REMOVED.

UNIT 101 UNIT 102 UNIT 103 UNIT 104 UNIT 105 UNIT 106 UNIT 107 UNIT 108 UNIT 109 UNIT 110 UNIT 111 UNIT 112 UNIT 114 UNIT 115 UNIT 116 UNIT 117

CORRODR LOUNGE CONCIERGE

EXISTING 1ϕ, 3 WIRES, ELECTRICAL PANEL TO REMAIN.

EXISTING 1ϕ, 3 WIRES, ELECTRICAL PANELS TO REMAIN. ELIMINATE ALL EXISTING STOVES AND GUESTROOM A/C CIRCUITS.

EXISTING PANEL TO BE UN-INSTALLED. DISCONNECT TAP FEEDERS FROM PANEL BESIDE IT.

EXISTING PANEL TO REMAIN. 1

UNIT 32 UNIT 31 UNIT 30 UNIT 98 UNIT 9A UNIT 12 UNIT 11 UNIT 16A UNIT 16B UNIT 38 UNIT 37 UNIT 36

CORRIDOR

EXISTING PANEL TO BE RELOCATED. 1

CAMPTON APARTMENTS

EXISTING PANEL TO REMAIN. 1

UNIT 18 UNIT 19 UNIT 20 UNIT 1 UNIT 4 UNIT 3 UNIT 7A UNIT 7B UNIT 24 UNIT 25 UNIT 26

EXISTING PANEL TO BE RELOCATED. 1

COURTYARD

EXISTING POWER POLE TO BE REMOVED AS PART OF NEW ELECTRICAL SERVICE WORK.

LOBBY

HADDON HALL

EXISTING FIRE ALARM CONTROL PANEL TO BE REPLACED BY NEW FIRE ALARM PANEL.

EXISTING PANELS TO REMAIN. SEE SCOPE OF WORK NOTES No.4 AND 5. 1

LIBRARY UNIT 131 UNIT 130 UNIT 129 UNIT 128 UNIT 127 UNIT 126 UNIT 125 UNIT 124 UNIT 123 UNIT 122 UNIT 121 UNIT 120 UNIT 119 UNIT 118

PANEL 'B' PANEL 'C' PANEL 'A'

EXISTING PANEL TO BE UN-INSTALLED. DISCONNECT FEEDERS, CAP DEAD AND ABANDON RACEWAY.

EXISTING 1ϕ, 3 WIRES, ELECTRICAL PANEL TO REMAIN.

EXISTING 400 AMPS, 240/120 VOLTS 1ϕ, 3 WIRES FPL SERVICE DROP FOR CAMPTON BUILDING TO BE REMOVED AND REPLACED WITH NEW SERVICE

EXISTING 35 AMPS FUSED MAIN, 1ϕ METER STACKS TO BE REMOVED. 23 METERS IN TOTAL.

GROUND FLOOR DEMOLITION PLAN

SCALE:3/32"=1'-0"

HADDON HALL
1500 COLLINS AVE

MIAMI BEACH, FL

KEYPLAN N.T.S.

REVISIONS

NO.	DESCRIPTION	ISSUE DATE
1	100% CD COORD. REVISION	2-18-14
7	POOL SUITES WALLS	04-04-14

MTCI
PRIVATE PROVIDER SERVICES, LLC
Construction Plans Review, Inspections, Testing & Consulting

	REVIEWER INITIALS	DATE REVIEWED
BUILDING		
STRUCTURAL		
MECHANICAL		
ELECTRICAL	TDC	11-10-14
PLUMBING		
SITE CIVIL		

100% CONSTRUCTION DOCUMENT SET

NORTH SEAL

Jonathan Cardello
Lic. # AR93391

ADD Inc Architecture Interiors Planning

One Biscayne Tower
Suite 1670
Two South
Biscayne Boulevard
Miami, Fl 33131
T. 305.482.8700
F. 305.482.8770
www.addinc.com
Lic. # AA26001507

Boston Miami

JOB NUMBER: 13036.00
CHECKED BY:
ISSUE DATE: MARCH 14, 2014
SCALE: AS NOTED

SHEET TITLE

GROUND FLOOR DEMOLITION PLAN

MAY 09 2014

STEVEN M. FELLER LICENSE No. 22046 STATE OF FLORIDA PROFESSIONAL ENGINEER

APPROVED MIAMI BEACH FIRE DEPARTMENT

STEVEN FELLER P.E., PL
FLORIDA P.E. Reg. # 22046
Certificate of Authorization # 00003427
500 N.E. THIRD AVENUE
FORT LAUDERDALE, FLORIDA 33301
PH: 954.467.1402 FAX: 954.467.5732
e-mail: fellerpe@fellerpe.com
JOB # 13153

SHEET NUMBER

E0.02

COPYRIGHT ADD INC 2011

File: E:\Jobs Install\EVERYONE\Working Floor Demos.dgn 14 apr 2014 08:39:36 Plotted: 03.02
User: Jaime Tovar

SCOPE OF WORK:

1–REFURBISH PANEL(S) INDICATED IN DRAWING TO "AS NEW" CONDITION.
2–EXISTING POOL SUITES BUILDING TO BE PARTIALLY DEMOLISHED. 7

ELECTRICAL DEMOLITION NOTES:

1. WITHIN THE AREA IDENTIFIED, CONTRACTOR SHALL DISCONNECT AND REMOVE ALL EXISTING ELECTRICAL DEVICES AND EQUIPMENT, AND REMOVE ALL UNUSED CONDUIT AND WIRING BACK TO NEXT ACTIVE OUTLET. EXISTING CIRCUIT ASSOCIATED WITH THIS SHALL BE REUSED FOR NEW INSTALLATION IN RESPECTIVE PNLS. WHERE CONDUIT IS INACCESSIBLE, REMOVE CONDUCTORS AND CUT BACK CONDUIT FLUSH WITH SLAB OR WALL. PATCH OPENINGS TO MATCH EXISTING FINISHES. WHERE EXISTING WIRING EXTENDS OUTSIDE OF THE AREA BY NATURE OF THE ORIGINAL INSTALLATION, CONTRACTOR SHALL MODIFY EXISTING WIRING AS REQUIRED TO MAINTAIN CONTINUITY OF EXISTING CIRCUITRY SUCH THAT NO EQUIP. TO REMAIN IS LEFT WITHOUT SERVICE. (CONTRACTOR SHALL NOT SERVICE TO ELECTRICAL EQUIPMENT AND DEVICES TO REMAIN).
2. ALL REMOVED ITEMS SHALL BE DISCARDED APPROPRIATELY.
3. THE CONTRACTOR SHALL VISIT THE SITE AND EXAMINE THE EXISTING CONDITIONS PRIOR TO COMMENCING WORK AND SHALL NOTIFY THE ARCHITECT AND/OR ENGINEER IF AN EXISTING CONDITION PREVENTS HIM FROM ACCOMPLISHING THE WORK INDICATED AND INTENDED BY THESE DRAWINGS.
4. PRIOR TO BID, THE EXTENT AND UNDERSTANDING OF THE WORK TO BE PERFORMED SHALL BE CLEARLY ESTABLISHED SUCH THAT NO ADDITIONAL COSTS WILL BE INCURRED. ANY WORK, OTHER THAN AS DESCRIBED ON THESE DRAWINGS REQUIRED TO PROVIDE AND INSTALL ANY ITEM OR SYSTEMS SHALL BE QUALIFIED WITH THE BID.
5. PRIOR TO COMMENCING WORK, CONTRACTOR SHALL DISCONNECT POWER IN THE DEMOLITION AREA INCLUDING POWER FOR THE LOW-VOLTAGE SYSTEMS SUCH AS FIRE ALARM, CONTROL WIRING, ETC.
6. CONTRACTOR SHALL EXERCISE EXTREME CAUTION DURING DEMOLITION WORK. EXISTING FEEDERS AND PANELS ARE SHOWN SCHEMATIC FOR REFERENCE PURPOSES ONLY. CONTRACTOR SHALL VERIFY IN FIELD ROUTING OF ALL EXISTING FEEDERS PRIOR TO DEMOLITION.
7. CONTRACTOR SHALL PROVIDE TEMPORARY POWER WHERE REQUIRED DURING DEMOLITION AND CONSTRUCTION SCOPE OF WORK.
8. ALL WORK SHALL BE PERFORMED BY A LICENSED ELECTRICAL CONTRACTOR AND SHALL BE COORDINATED WITH OTHER TRADES.
9. CONTRACTOR SHALL PROVIDE ALL REQUIRED INSURANCE FOR PROTECTION AGAINST PUBLIC LIABILITY FOR THE DURATION OF THE WORK.
10. CONTRACTOR SHALL PAY FOR THE PERMITS, FEES & INSPECTIONS.

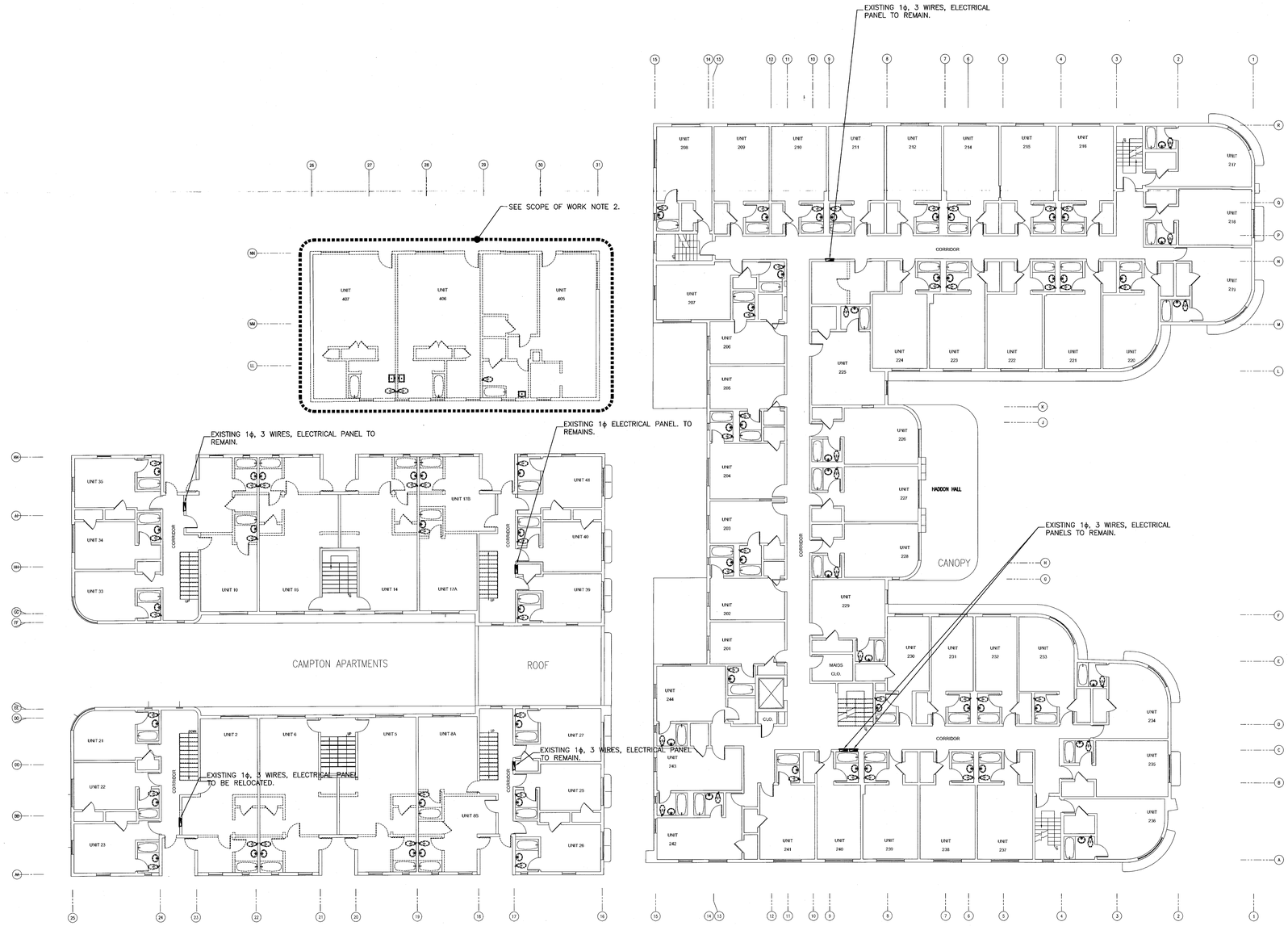

SECOND FLOOR DEMOLITION PLAN

SCALE:3/32"=1'-0"

HADDON HALL
1500 COLLINS AVE

MIAMI BEACH, FL

KEYPLAN N.T.S.

REVISIONS

NO.	DESCRIPTION	ISSUE DATE
7	POOL SUITES WALLS	04-04-14

100% CONSTRUCTION DOCUMENT SET

NORTH SEAL

Jonathan Cardello
Lic. # AR93391

ADD Inc Architecture Interiors Planning

One Biscayne Tower
Suite 1670
Two South
Biscayne Boulevard
Miami, Fl 33131
T. 305.482.8700
F. 305.482.8770
www.addinc.com
Lic. # AA26001507

Boston Miami

MTCI PRIVATE PROVIDER SERVICES, LLC
Construction Plans Review, Inspections, Testing & Compliance

	REVIEWER INITIALS	DATE REVIEWED
BUILDING		
STRUCTURAL		
MECHANICAL		
ELECTRICAL	TDC	11-10-14
PLUMBING		
SITE CIVIL		

JOB NUMBER: 13036.00
CHECKED BY:
ISSUE DATE: MARCH 14, 2014
SCALE: AS NOTED

SHEET TITLE

SECOND FLOOR DEMOLITION PLAN

MAY 09 2014
STEVEN M. FELLER LICENSE No. 22046 STATE OF FLORIDA PROFESSIONAL ENGINEER

APPROVED MIAMI BEACH FIRE DEPARTMENT

STEVEN FELLER P.E., PL
FLORIDA P.E. Reg. # 22046
Certificate of Authorization # 00003427
330 N.E. THIRD AVENUE
FORT LAUDERDALE, FLORIDA 33301
PH: 954.467.1402 FAX: 954.467.5752
e-mail: fellerpe@fellerpe.com
JOB # 13153

SHEET NUMBER

E0.03

COPYRIGHT ADD INC 2011

File: E:\2013 Jobs\13036 Haddon Hall\EVERS Haddon Hall_Revit_Central.rvt
User: Juliana Tabor Date: 4/9/2014 8:34:38 PM

SCOPE OF WORK:

1–REMOVE ALL STOVES AND A/C CIRCUITS FROM EXISTING TO REMAIN PANELS. 7
2–EXISTING POOL SUITES BUILDING TO BE PARTIALLY DEMOLISHED.
3–REMOVE PANELS INDICATED. CAP DEAD AND ABANDON ALL FEEDERS.

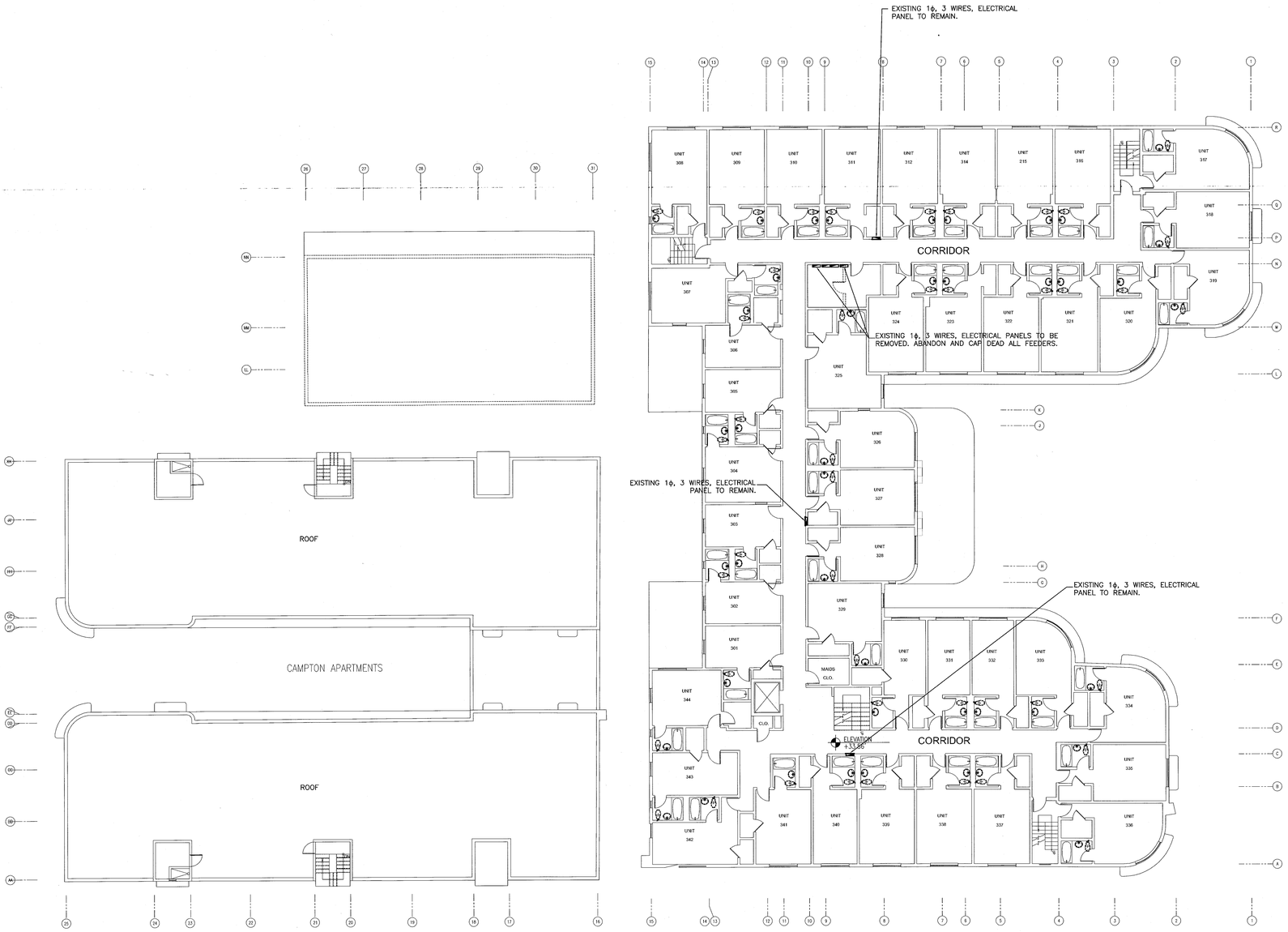

ELECTRICAL DEMOLITION NOTES:

1. WITHIN THE AREA IDENTIFIED, CONTRACTOR SHALL DISCONNECT AND REMOVE ALL EXISTING ELECTRICAL DEVICES AND EQUIPMENT, AND REMOVE ALL UNUSED CONDUIT AND WIRING BACK TO NEXT ACTIVE OUTLET. EXISTING CIRCUIT ASSOCIATED WITH THIS SHALL BE REUSED FOR NEW INSTALLATION IN RESPECTIVE PNLS. WHERE CONDUIT IS INACCESSIBLE, REMOVE CONDUCTORS AND CUT BACK CONDUIT FLUSH WITH SLAB OR WALL. PATCH OPENINGS TO MATCH EXISTING FINISHES. WHERE EXISTING WIRING EXTENDS OUTSIDE OF THE AREA BY NATURE OF THE ORIGINAL INSTALLATION, CONTRACTOR SHALL MODIFY EXISTING WIRING AS REQUIRED TO MAINTAIN CONTINUITY OF EXISTING CIRCUITRY SUCH THAT NO EQUIP. TO REMAIN IS LEFT WITHOUT SERVICE. (CONTRACTOR SHALL NOT SERVICE TO ELECTRICAL EQUIPMENT AND DEVICES TO REMAIN).
2. ALL REMOVED ITEMS SHALL BE DISCARDED APPROPRIATELY.
3. THE CONTRACTOR SHALL VISIT THE SITE AND EXAMINE THE EXISTING CONDITIONS PRIOR TO COMMENCING WORK AND SHALL NOTIFY THE ARCHITECT AND/OR ENGINEER IF AN EXISTING CONDITION PREVENTS HIM FROM ACCOMPLISHING THE WORK INDICATED AND INTENDED BY THESE DRAWINGS.
4. PRIOR TO BID, THE EXTENT AND UNDERSTANDING OF THE WORK TO BE PERFORMED SHALL BE CLEARLY ESTABLISHED SUCH THAT NO ADDITIONAL COSTS WILL BE INCURRED. ANY WORK, OTHER THAN AS DESCRIBED ON THESE DRAWINGS REQUIRED TO PROVIDE AND INSTALL ANY ITEM OR SYSTEMS SHALL BE QUALIFIED WITH THE BID.
5. PRIOR TO COMMENCING WORK, CONTRACTOR SHALL DISCONNECT POWER IN THE DEMOLITION AREA INCLUDING POWER FOR THE LOW-VOLTAGE SYSTEMS SUCH AS FIRE ALARM, CONTROL WIRING, ETC.
6. CONTRACTOR SHALL EXERCISE EXTREME CAUTION DURING DEMOLITION WORK. EXISTING FEEDERS AND PANELS ARE SHOWN SCHEMATIC FOR REFERENCE PURPOSES ONLY. CONTRACTOR SHALL VERIFY IN FIELD ROUTING OF ALL EXISTING FEEDERS PRIOR TO DEMOLITION.
7. CONTRACTOR SHALL PROVIDE TEMPORARY POWER WHERE REQUIRED DURING DEMOLITION AND CONSTRUCTION SCOPE OF WORK.
8. ALL WORK SHALL BE PERFORMED BY A LICENSED ELECTRICAL CONTRACTOR AND SHALL BE COORDINATED WITH OTHER TRADES.
9. CONTRACTOR SHALL PROVIDE ALL REQUIRED INSURANCE FOR PROTECTION AGAINST PUBLIC LIABILITY FOR THE DURATION OF THE WORK.
10. CONTRACTOR SHALL PAY FOR THE PERMITS, FEES & INSPECTIONS.

THIRD FLOOR DEMOLITION PLAN

SCALE:3/32"=1'-0"

HADDON HALL
1500 COLLINS AVE

MIAMI BEACH, FL

KEYPLAN N.T.S.

REVISIONS

NO.	DESCRIPTION	ISSUE DATE
7	POOL SUITES WALLS	04-04-14

100% CONSTRUCTION DOCUMENT SET

NORTH SEAL

Jonathan Cardello
Lic. # AR93391

ADD Inc Architecture Interiors Planning

One Biscayne Tower
Suite 1670
Two South
Biscayne Boulevard
Miami, Fl 33131
T. 305.482.8700
F. 305.482.8770
www.addinc.com
Lic. # AA26001507

Boston Miami

MTCI
PRIVATE PROVIDER SERVICES, LLC
Construction Plans Review, Inspections, Testing & Accounting

	REVIEWER INITIALS	DATE REVIEWED
BUILDING		
STRUCTURAL		
MECHANICAL		
ELECTRICAL	TDC	11-10-14
PLUMBING		
SITE CIVIL		

JOB NUMBER: 13036.00
CHECKED BY:
ISSUE DATE: MARCH 14, 2014
SCALE: AS NOTED

SHEET TITLE

THIRD FLOOR DEMOLITION PLAN

MAY 09 2014
STEVEN M. FELLER LICENSE No. 22046 STATE OF FLORIDA PROFESSIONAL ENGINEER

APPROVED MIAMI BEACH FIRE DEPARTMENT

STEVEN FELLER P.E., PL
FLORIDA P.E. Reg. # 22046
Certificate of Authorization # 00003427
500 N.E. THIRD AVENUE
FORT LAUDERDALE, FLORIDA 33301
PH: 954.467.1402 FAX: 954.467.5752
e-mail: fellerpe@bellsouth.net
JOB # 13153

SHEET NUMBER

E0.04

COPYRIGHT ADD INC 2011

File: K:\Projects\2013\13153\Cad\Arch\Plans\Permitting\13153 E0.04 Plan Permitting.dwg Layout: E0.04
Date: May 9, 2014 - 01:54:37 PM User: Jaime Bonet

LIGHTING FIXTURE SCHEDULE - HADDON HALL

	TYPE/SYMBOL	DESCRIPTION	FIXTURE TYPE, MANUFACTURER & CATALOG #	BULB TYPE & WATTAGE	MOUNTING TYPE & HEIGHT	REMARKS
A		STEP LIGHT	LIGMAN U40009-3K-120-L1-SS	2W LED 3K	FLUSH to RISER	
B		STRING LIGHT	PRIMUS DECOSTRING	.5W 27K	10' HT.	2' O.C. SPACING ON SUSPENDED CABLE SPANS W/ SHADE
C		DRIVEWAY LIGHT	LUMIERE 696-6LED2721-120/12-XX	6W LED	FLUSH TO PAVEMENT	
D		WALL LIGHT	LIGMAN CINATI LED	3W LED	30" HI.	SEE PLAN FOR LOCATION & SPACING
E		SMALL UPLIGHT	LUMIERE 203-6LED3021-12-BZ/FH203-BZ	6W LED 3000K NARROW FLOOD	AT GRADE	REMOTE TRANSFORMER. 'BURIED' IN VEGETATION. TO BE ADJUSTED ON-SITE BY OWNER OR LA
F		LARGE UPLIGHT	LUMIERE 203-10LED3021-12-BZ	10W LED 3000K NARROW FLOOD	AT GRADE	REMOTE TRANSFORMER. SEE PLAN FOR LOCATION & SPACING
G		PATH LIGHT	TERON 8300K-15833AZT	4.5W LED, 3000K	AT GRADE, 22.75" STEM HEIGHT	REMOTE TRANSFORMER. SEE PLAN FOR LOCATION & SPACING
H		TREE LIGHT	LUMIERE 203-6LED3021-12-BZ/FH203-TM01	6W LED 3000K NARROW FLOOD		REMOTE TRANSFORMER. W/ TREE STRAP
I		LANTERN LIGHT	CUSTOM BOTTLE	FILAMENT		AT TRELLIS AND WEST COURTYARD
J		FOUNTAIN LIGHT	AQUASCAPE	LED, 4000 K	TRIPOD	ENTRY COURTYARD FOUNTAIN, WHITE CABLE & FIXTURES IF EXPOSED
EM1		OUTDOOR EGRESS	EXTERIOR WALL MOUNT SIGNTEX MOONLITE MOE-BB-15L3-W	15 W LED, 4000 K	8'-6" MOUNTING HEIGHT	BATTERY BACKUP EGRESS EMERGENCY LIGHTING
EM2		OUTDOOR EGRESS	EXTERIOR POLE MOUNT SIGNTEX MOONLITE MOP-BB-24-15L3-W	15 W LED, 4000 K	24" MOUNTING HEIGHT	BATTERY BACKUP EGRESS EMERGENCY LIGHTING
M		OUTDOOR EGRESS	EXTERIOR POLE MOUNT BEACHSIDE LIGHTING R5-20-120-10W-A-GS2-FIN-WH	15 W LED, 4000 K	24" MOUNTING HEIGHT	THIS LIGHTING ON GFCI CIRCUIT BREAKER.

PLAN NOTES:

1– ALL EXTERIOR HADDON HALL AND CAMPTON BUILDINGS LIGHTING TO BE UPGRADED AND REPLACED AS INDICATED.
2– PROVIDE NEW BUILDING FACADE UP–LIGHTING AT TOP OF ENTRANCE CANOPY AS INDICATED.
3– REPLACE EXISTING CANOPY LIGHTING WITH NEW LIGHTING AT CAMPTON.
4– PROVIDE BACKLIGHTING ON NORTH, EAST AND SOUTH FACADES AT ARCHITECTURAL SCREENS.
5– CONTRACTOR TO VERIFY MAXIMUM LENGHT FOR LIGHTSTRINGS, (TYPE 'B' LIGHT FIXTURES), TO BE LESS THAN 63'.
6– PROVIDE SEPARATED PHOTOCELL CONTROL FOR EACH LANDSCAPE JUNCTION BOX/TRANSFORMER SHOWN WITH AN ASSOCIATED CIRCUIT NUMBER IN DRAWING.
7– ALL LANDSCAPE ELECTRICAL EQUIPMENT TO BE OF THE WEATHER PROOF TYPE.
8– ALL EMERGENCY LIGHTING TO BE ON 90 MIN. BATTERY BACKUP TYPE OF LIGHT FIXTURES. LABELED 'EM'.
9–REFER TO GROUND LEVEL LIGHTING DRAWING E1.02 FOR ADDITIONAL EXTERIOR LIGHTING TO THE PATH OF EGRESS.
10–REFER TO LANDSCAPE ARCHITECT DRAWINGS FOR EXACT LOCATION OF ALL LANDSCAPE LUMINAIRES.
11–NON–RESIDENTIAL LIGHTING COMPLIES WITH 2010FBC–ENERGY CODE 505.5 INTERIOR LIGHTING REQUIREMENTS.
12–SWIMMING POOL NOT IN ELECTRIC CONTRACT.
13–PUBLIC SWIMMING POOL LIGHTING COMPLIES 3FC. MINIMUM. 2010 FBC 424.4.2.1
14–CONTRACTOR TO INSTALL ALL ELECTRICAL PANELS AND DISCONNECTS MINIMUM OF 1 FT. ABOVE FLOOD LEVEL. TO BOTTOM LINE OF EQUIPMENT. REFER TO ARCHITECTURAL DRAWINGS FOR ALL FLOOR LEVELS.

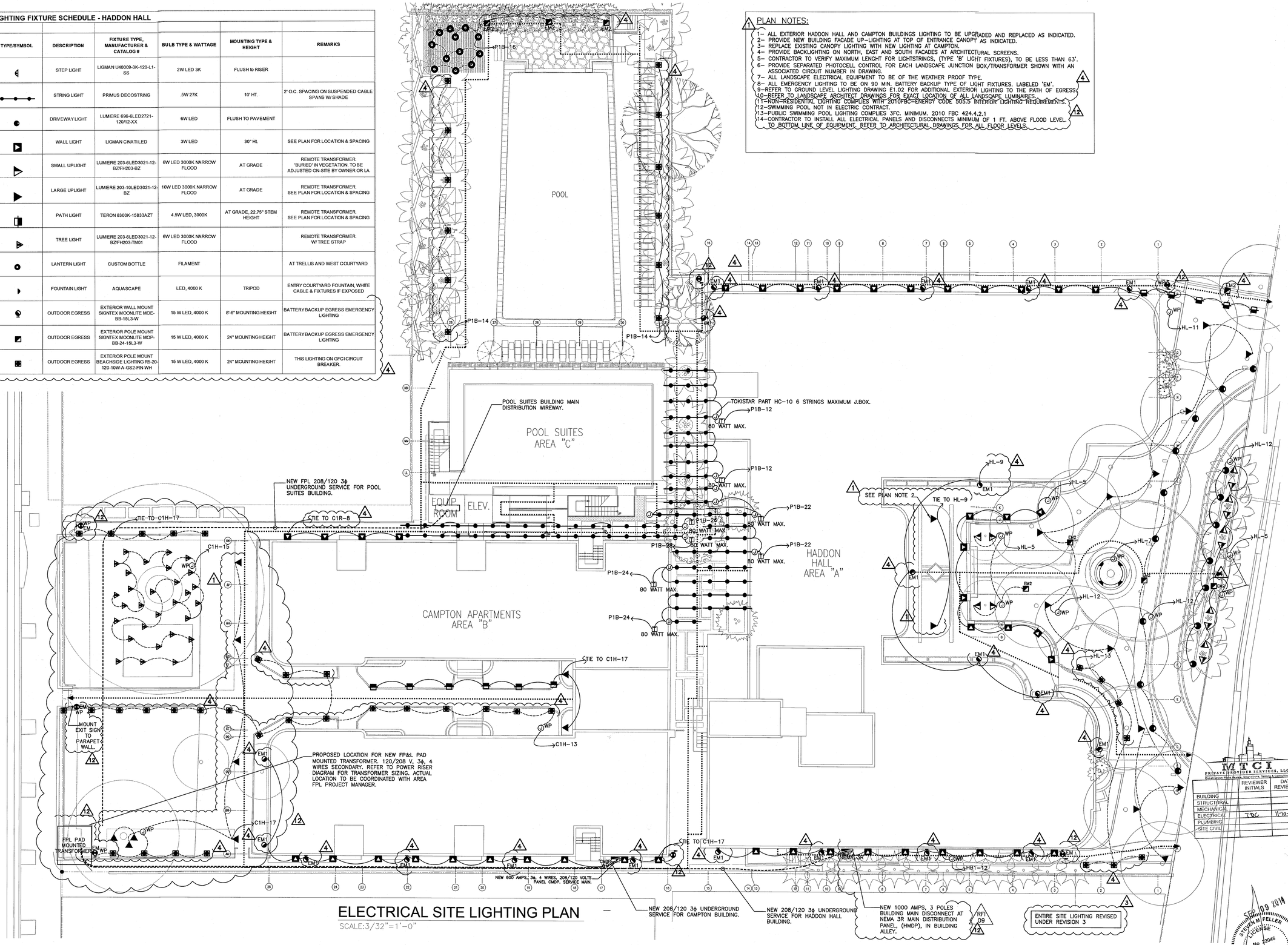

ELECTRICAL SITE LIGHTING PLAN

SCALE:3/32"=1'–0"

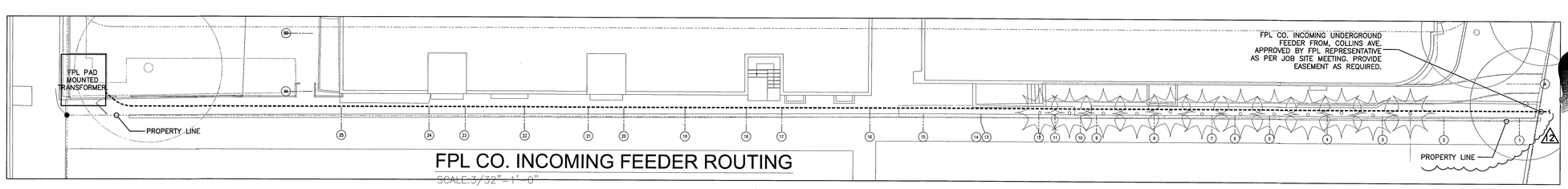

FPL CO. INCOMING FEEDER ROUTING

SCALE:3/32"=1'–0"

HADDON HALL
1500 COLLINS AVE

MIAMI BEACH, FL

KEYPLAN N.T.S.

REVISIONS

NO.	DESCRIPTION	ISSUE DATE
1	100% CD COORD. REVISION	2–18–14
3	COORD. REVISION	3–14–14
4	FIRE REVIEW COMMENTS	4–7–14
12	FIRE DPMT. PERMIT COMM.	8–21–14

100% CONSTRUCTION DOCUMENT SET

NORTH SEAL

Jonathan Cardello
Lic. # AR93391

ADD Inc Architecture Interiors Planning

One Biscayne Tower
Suite 1670
Two South
Biscayne Boulevard
Miami, Fl 33131
T. 305.482.8700
F. 305.482.8770
www.addinc.com
Lic. # AA26001507

Boston Miami

NTCI PRIVATE PROVIDER SERVICES, LLC
Construction Plans Review, Inspections, Testing & Consulting

	REVIEWER INITIALS	DATE REVIEWED
BUILDING		
STRUCTURAL		
MECHANICAL		
ELECTRICAL	TDC	11-10-14
PLUMBING		
SITE CIVIL		

JOB NUMBER:	13036.00
CHECKED BY:	
ISSUE DATE:	MARCH 14, 2014
SCALE:	AS NOTED

SHEET TITLE

SITE PLAN ELECTRICAL

SEP 09 2014
STEVEN M FELLER LICENSE No. 22046 STATE OF FLORIDA PROFESSIONAL ENGINEER

STEVEN FELLER P.E.,PL
FLORIDA P.E. Reg. # 22046
Certificate of Authorization # 00003427
500 N.E. THIRD AVENUE
FORT LAUDERDALE, FLORIDA 33301
PH: 954.467.1402 FAX: 954.467.5752
e-mail: fellerpe@fellerpe.com
JOB # 13153

APPROVED MIAMI BEACH FIRE DEPARTMENT

SHEET NUMBER

E1.00

COPYRIGHT ADD INC 2011

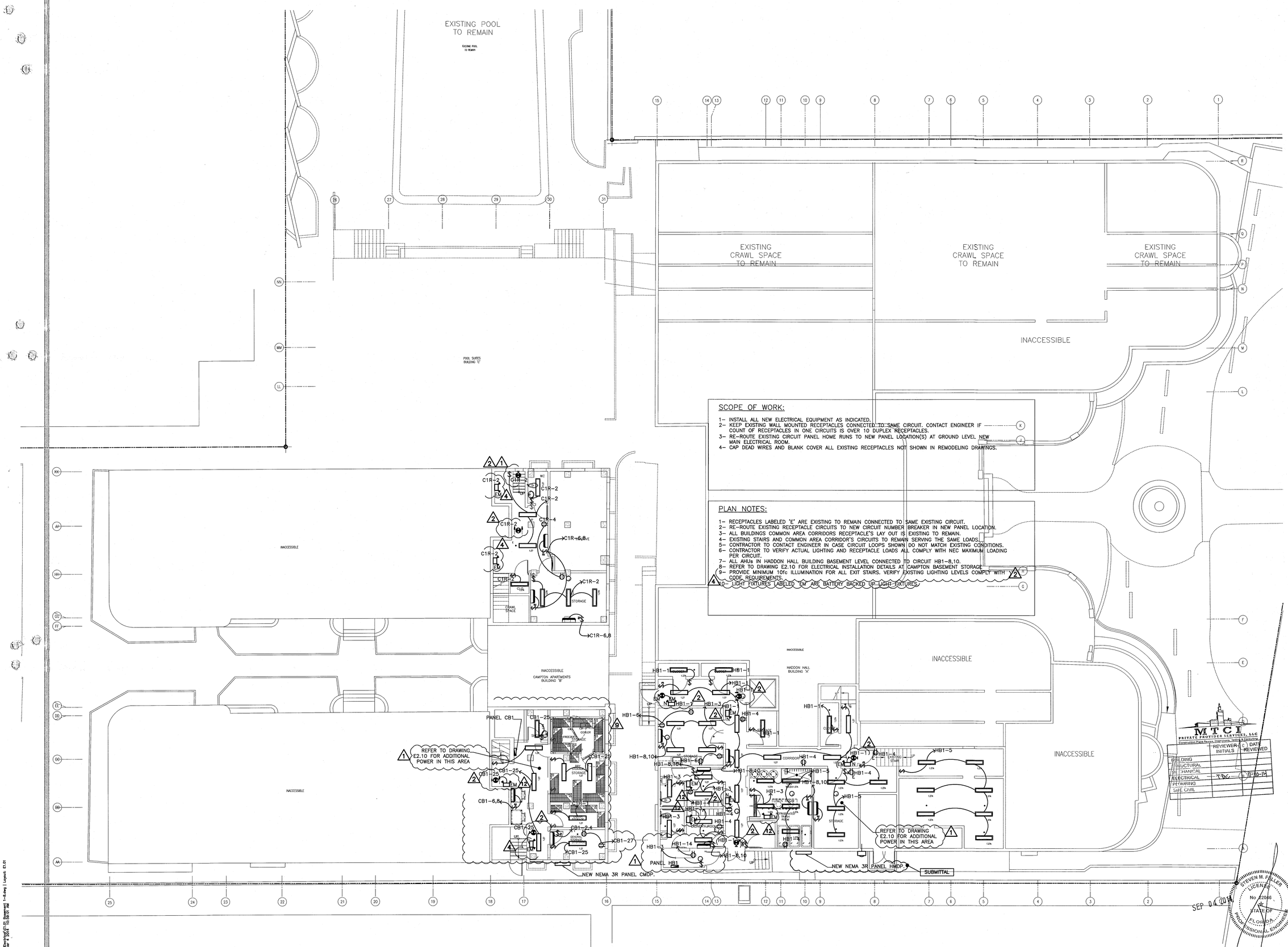

SCOPE OF WORK:

1– INSTALL ALL NEW ELECTRICAL EQUIPMENT AS INDICATED.
2– KEEP EXISTING WALL MOUNTED RECEPTACLES CONNECTED TO SAME CIRCUIT. CONTACT ENGINEER IF COUNT OF RECEPTACLES IN ONE CIRCUITS IS OVER 10 DUPLEX RECEPTACLES.
3– RE-ROUTE EXISTING CIRCUIT PANEL HOME RUNS TO NEW PANEL LOCATION(S) AT GROUND LEVEL NEW MAIN ELECTRICAL ROOM.
4– CAP DEAD WIRES AND BLANK COVER ALL EXISTING RECEPTACLES NOT SHOWN IN REMODELING DRAWINGS.

PLAN NOTES:

1– RECEPTACLES LABELED 'E' ARE EXISTING TO REMAIN CONNECTED TO SAME EXISTING CIRCUIT.
2– RE-ROUTE EXISTING RECEPTACLE CIRCUITS TO NEW CIRCUIT NUMBER BREAKER IN NEW PANEL LOCATION.
3– ALL BUILDINGS COMMON AREA CORRIDORS RECEPTACLE'S LAY OUT IS EXISTING TO REMAIN.
4– EXISTING STAIRS AND COMMON AREA CORRIDOR'S CIRCUITS TO REMAIN SERVING THE SAME LOADS.
5– CONTRACTOR TO CONTACT ENGINEER IN CASE CIRCUIT LOOPS SHOWN DO NOT MATCH EXISTING CONDITIONS.
6– CONTRACTOR TO VERIFY ACTUAL LIGHTING AND RECEPTACLE LOADS ALL COMPLY WITH NEC MAXIMUM LOADING PER CIRCUIT.
7– ALL AHUs IN HADDON HALL BUILDING BASEMENT LEVEL CONNECTED TO CIRCUIT HB1–8,10.
8– REFER TO DRAWING E2.10 FOR ELECTRICAL INSTALLATION DETAILS AT CAMPTON BASEMENT STORAGE
9– PROVIDE MINIMUM 10fc ILLUMINATION FOR ALL EXIT STAIRS. VERIFY EXISTING LIGHTING LEVELS COMPLY WITH CODE REQUIREMENTS.
10– LIGHT FIXTURES LABELED 'EM' ARE BATTERY BACKED UP LIGHT FIXTURES.

BASEMENT LIGHTING AND POWER PLAN

SCALE: 1/8"=1'-0"

HADDON HALL
1500 COLLINS AVE

MIAMI BEACH, FL

KEYPLAN N.T.S.

REVISIONS

NO.	DESCRIPTION	ISSUE DATE
1	100% CD COORD. REVISION	02–18–14
2	PERMIT REVIEW COMMENTS	3–14–14
4	FIRE REVIEW COMMENTS	4–7–14
9	KITCHEN RELOCATION	5–30–14
12	FIRE DPMT. PERMIT COMM.	8–21–14

100% CONSTRUCTION DOCUMENT SET

NORTH SEAL

Jonathan Cardello
Lic. # AR93391

ADD Inc Architecture Interiors Planning

One Biscayne Tower
Suite 1670
Two South
Biscayne Boulevard
Miami, Fl 33131
T. 305.482.8700
F. 305.482.8770
www.addinc.com
Lic. # AA26001507

Boston Miami

MTCI PRIVATE PROVIDER SERVICES, LLC
Conservation Plans Review, Inspections, Testing & Consulting

	REVIEWER INITIALS	DATE REVIEWED
BUILDING		
STRUCTURAL		
MECHANICAL		
ELECTRICAL	TDC	11-10-14
PLUMBING		
SITE CIVIL		

JOB NUMBER: 13036.00
CHECKED BY:
ISSUE DATE: MARCH 14, 2014
SCALE: AS NOTED

SHEET TITLE

BASEMENT ELECTRICAL PLAN

STEVEN M. FELLER LICENSE No. 22046 STATE OF FLORIDA PROFESSIONAL ENGINEER

SEP 04 2014

APPROVED MIAMI BEACH FIRE DEPARTMENT

SHEET NUMBER

E1.01

STEVEN FELLER P.E.,PL
FLORIDA P.E. Reg. # 22046
Certificate of Authorization # 00003427
500 N.E. THIRD AVENUE
FORT LAUDERDALE, FLORIDA 33301
PH: 954.467.1402 FAX: 954.467.5752
e-mail: feller@fellerpe.com
JOB # 13153

COPYRIGHT ADD INC 2011

SCOPE OF WORK:

1–INSTALL NEW LIGHT FIXTURES AS INDICATED IN DRAWINGS. CONNECT TO NEW LIGHTING CIRCUITS.
2–INSTALL ALL NEW BATTERY BACKED UP LIGHT FIXTURES AS INDICATED.
3–REPLACE EXISTING LIGHT FIXTURES BY NEW ONES WHERE INDICATED. KEEP CIRCUIT CONNECTIONS AS EXISTING.
4–UNINSTALL ALL LIGHT FIXTURES LABELED 'D'. DISCONNECT LINE FEEDER TO EACH DEMOLISHED LIGHT FIXTURE.
5–CONNECT ALL NEW EMERCY LIGHTING BATTERY BACK–UP LIGHT FIXTURES TO EXISTING LIGHTING CIRCUITS AS INDICATED IN DRAWING.
6–EXIT STAIRWAYS LIGHTING IS EXISTING TO REMAIN, NOT IN THE SCOPE OF WORKS.

PLAN NOTES:

1– LIGHT FIXTURES LABELED 'EM' TO BE 90 MINUTES BATTERY BACKED UP LIGHT FIXTURES.
2– ALL BUILDINGS COMMON AREA CORRIDORS LIGHTING LAY OUT IS EXISTING TO REMAIN, EXCEPT FOR THE POOL SUITES NEW BUILDING AND NOTED AS NEW IN OTHER BUILDINGS.
3– EXISTING STAIRS AND COMMON AREA CORRIDOR'S CIRCUITS TO REMAIN SERVING THE SAME LOADS. NOT IN THE SCOPE.
4– RE–ROUTE NEW LIGHTING CIRCUITS TO NEW CIRCUIT BREAKER NUMBER IN EXISTING PANEL 'H1E'.
5– CONTRACTOR TO VERIFY ACTUAL LIGHTING LOADS ALL COMPLY WITH NEC MAXIMUM LOADING PER CIRCUIT PERMITTED.
6–PROVIDE 90 MINUTES BATTERY BACKED UP LIGHT FIXTURES FOR LUMINAIRES OR CEILING ELECTRICAL OUTLETS LABELED 'EM'.
7–ALL WALL MOUNTED DIMMERS TO BE 16 AMPS, 120VAC, 4 CHANNELS, 1920 WATTS EACH.
8–EACH DIMMER'S HOME–RUN DENOTES A DIMMER LOAD'S CONTROL CHANNEL. DIMMER 1/A DENOTES DIMMER 1, CHANNEL A.
9–NEW COVE LIGHTING CALCULATED AT 6W/LINEAR FEET WITH LED LIGHT SOURCE.
10–ONLY NEW LIGHTING FIXTURES CIRCUITED TO NEW PANELS.
11–ALL REPLACED LIGHT FIXTURES TO REMAIN CONNECTED TO EXISTING CIRCUITS. TOTAL WATTAGE PER CIRCUIT HAS BEEN REDUCED. REFER TO LFS IN DRAWING E3.05
12–PROVIDE MINIMUM 10fc ILLUMINATION FOR ALL NEW EXIT STAIRS. VERIFY EXISTING LIGHTING LEVELS COMPLY WITH CODE REQUIREMENTS.
13–REFER TO SITE LIGHTING PLAN, DRAWING E1.00, FOR ADDITIONAL LIGHTING TO THE PATH OF EGRESS.)
14–FOR INFORMATION OF EM1 TYPE FIXTURES REFER TO SITE PLAN LIGHT FIXTURES SCHEDULE.

WALL MOUNTED, 16 AMPS, 4 CHANNELS DIMMERS STATION, FED FROM CIRCUITS:
1ra HB–5
1rb HB–5

WALL MOUNTED, 16 AMPS, 4 CHANNEL DIMMERS STATION, FED FROM CIRCUITS:
2ra HL–1
2rb HL–1

CONNECT TO EXISTING STAIR CIRCUIT.
CONNECT TO EXISTING ROOM LIGHTING CIRCUIT.
CONNECT TO EXISTING STAIR CIRCUIT.

GROUND FLOOR LIGHTING PLAN
SCALE: 1/8"=1'-0"

HADDON HALL
1500 COLLINS AVE.
MIAMI BEACH, FL

KEYPLAN N.T.S.

REVISIONS

NO.	DESCRIPTION	ISSUE DATE
1	100% CD COORD. REVISION	2–18–14
2	PERMIT REVIEW COMMENTS	3–14–14
4	FIRE REVIEW COMMENTS	4–7–14
9	KITCHEN RELOCATION	5–30–14
12	FIRE DPMT. PERMIT COMM.	8–21–14
12A	FIRE DPMT. PERMIT COMM.	9–29–14

100% CONSTRUCTION DOCUMENT SET

NORTH SEAL

Jonathan Cardello
Lic. # AR93391

ADD Inc Architecture Interiors Planning

One Biscayne Tower
Suite 1670
Two South
Biscayne Boulevard
Miami, Fl 33131
T. 305.482.8700
F. 305.482.8770
www.addinc.com
Lic. # AA26001507

Boston Miami

MTCH PRIVATE PROVIDER SERVICES, LLC
Construction Plans Review, Inspections, Safety & Compliance

	REVIEWER INITIALS	DATE REVIEWED
BUILDING		
STRUCTURAL		
MECHANICAL		
ELECTRICAL	TDC	11-10-14
PLUMBING		
SITE CIVIL		

JOB NUMBER: 13036.00
CHECKED BY:
ISSUE DATE: MARCH 14, 2014
SCALE: AS NOTED

SHEET TITLE

GROUND FLOOR LIGHTING PLAN

STEVEN M. FELLER LICENSE NO. 22046 STATE OF FLORIDA PROFESSIONAL ENGINEER

STEVEN FELLER P.E., PL
FLORIDA P.E. Reg.# 22046
Certificate of Authorization # 00003427
500 N.E. THIRD AVENUE,
FORT LAUDERDALE, FLORIDA 33301
PH: 954.467.1402 FAX: 954.467.5752
e-mail: fellerpe@fellerpe.com
JOB # 13153

SEP 26 APPROVED MIAMI BEACH FIRE DEPARTMENT

SHEET NUMBER

E1.02

COPYRIGHT ADD INC 2011

SCOPE OF WORK:

1- INSTALL NEW 600 AMPS, 3 POLES SERVICE DISCONNECT AS INDICATED IN NEW PROPOSED SITE PLAN AND NEW PROPOSED POWER RISER DIAGRAM FOR THE CAMPTON APARTMENTS BUILDING.
2- INSTALL NEW UNDERGROUND SUB-FEEDER TO POOL SUITES EXTERIOR BUILDING AS INDICATED.
3- REFURBISH EXISTING PANELS 'B' AND 'C' TO "AS NEW". UNINSTALL ALL CIRCUITS FEEDING EXISTING WALL A/C UNITS. RE-ROUTE CIRCUITS REMAINING AS INDICATED IN CONSTRUCTION DOCUMENTS PANEL SCHEDULES.
4- UN-INSTALL EXISTING LABELED PANEL 'A', UNINSTALL ALL CIRCUITS FEEDING EXISTING A/C UNITS IN REFERENCED PANEL. RECONNECT REMAINING CIRCUITS AS PER NEW CONSTRUCTION DOCUMENTS PANEL SCHEDULES. RE-ROUTE EXISTING TO REMAIN FEEDERS TO NEW DISTRIBUTION PANEL 'HMDP'.
5- REFURBISH PANEL(S) INDICATED IN DRAWING TO "AS NEW" CONDITION.
6- DISCONNECT ALL ROOM STOVE CIRCUITS AND ROOM WINDOW A/C CIRCUITS FROM ITS PANELS.
7- UN-INSTALL PANELS SERVING ONLY A/C OR ROOM STOVES.
8- REMOVE ALL VISIBLE SURFACE MOUNTED CONDUITS AND RE-ROUTE UNDERGROUND WITHIN COURTYARD AND PUBLIC INTERIOR ACCESS WAYS.
9- RESTORE ELECTRICAL SERVICE TO HISTORICAL PILLARS AT COLLINS AVENUE.

PLAN NOTES:

1- ALL BUILDINGS COMMON AREA CORRIDOR RECEPTACLE'S LAY OUT IS EXISTING TO REMAIN, EXCEPT FOR THE POOL SUITES.
2- EXISTING STAIRS AND COMMON AREA CORRIDOR'S CIRCUITS TO REMAIN SERVING THE SAME LOADS.
3- RECEPTACLES LABELED 'E' ARE EXISTING TO REMAIN CONNECTED TO INDICATED CIRCUIT.
4- ALL BUILDINGS COMMON AREA CORRIDORS RECEPTACLE'S LAY OUT IS EXISTING TO REMAIN.
5- CONTRACTOR TO CONTACT ENGINEER IN CASE CIRCUITS SHOWN HAVE HIDDEN LOADS CONNECTED.
6- CONTRACTOR TO VERIFY ACTUAL LIGHTING AND RECEPTACLE LOADS ALL COMPLY WITH NEC MAXIMUM LOADING PER CIRCUIT.
7- FOR ALL EXISTING ELECTRICAL OUTLETS NOT SHOWN IN DRAWING, WIRES TO BE CAPPED AND J.BOX TO BE BLANK COVERED.
8- ALL GUESTROOM CIRCUITS TO STAY AS IS, FED FROM EXISTING PANELS, EXCEPT FOR THE NEW POOL SUITES.
9- CAP DEAD ALL WIRES SERVING OLD STOVE RECEPTACLES AND WINDOW A/C UNITS. BLANK COVER RESPECTIVE JUNCTION BOXES.
10- REFER TO E2 SERIES DRAWINGS FOR LAYOUT IN GUESTROOM UNITS.
11- RECEPTACLES LABELED 'N' ARE NEW TO BE CONNECTED TO INDICATED CIRCUIT.
12- ALL OUTDOOR RECEPTACLES TO BE OF THE WEATHER PROOF TYPE. (1)

MATCH LINE

MATCH LINE

NORTH POOL PLATFORM

SCALE:1/8"=1'-0"

GROUND FLOOR POWER PLAN

SCALE:1/8"=1'-0"

HADDON HALL
1500 COLLINS AVE

MIAMI BEACH, FL

KEYPLAN N.T.S.

REVISIONS

NO.	DESCRIPTION	ISSUE DATE
1	100% CD COORD. REVISION	2-18-14
5	GUESTROOM COORDINATION	3-14-14
9	KITCHEN RELOCATION	5-30-14
		9-02-14

100% CONSTRUCTION DOCUMENT SET

NORTH SEAL

Jonathan Cardello
Lic. # AR93391

ADD Inc Architecture Interiors Planning

One Biscayne Tower
Suite 1670
Two South
Biscayne Boulevard
Miami, Fl 33131
T. 305.482.8700
F. 305.482.8770
www.addinc.com
Lic. # AA26001507

Boston Miami

MTCI
PRIVATE PROVIDER SERVICES, LLC
Construction Plans Review, Inspections, Training & Consulting

	REVIEWER INITIALS	DATE REVIEWED
BUILDING		
STRUCTURAL		
MECHANICAL		
ELECTRICAL	TDC	10-10-14
PLUMBING		
SITE CIVIL		

JOB NUMBER: 13036.00
CHECKED BY:
ISSUE DATE: MARCH 14, 2014
SCALE: AS NOTED

SHEET TITLE

GROUND FLOOR POWER PLAN

SHEET NUMBER

E1.02A

COPYRIGHT ADD INC 2011

STEVEN FELLER P.E.,PL
FLORIDA P.E. Reg. #20046
Certificate of Authorization # 00003427
200 N.E. THIRD AVENUE
FORT LAUDERDALE, FLORIDA 33301
PH: 954.467.1402 FAX: 954.467.5752
e-mail: fellerpe@fellerpe.com
JOB # 13153

STEVEN M. FELLER LICENSE No. 20046 STATE OF FLORIDA PROFESSIONAL ENGINEER

SEP 04 2014

APPROVED MIAMI BEACH FIRE DEPARTMENT

SCOPE OF WORK:

1- REFURBISH EXISTING PANELS 'H2A' AND 'H2B' AND 'H2C' TO "AS NEW CONDITION". UNINSTALL ALL CIRCUITS FEEDING EXISTING A/C AND STOVES WHERE REQUIRED.
2- RECONNECT NEW RECEPTACLES IN CAMPTON GUESTROOMS TO EXISTING RECEPTACLE CIRCUIT IN BEDROOM.
3- DISCONNECT ALL ROOM STOVE CIRCUITS AND ROOM WINDOW A/C CIRCUITS FROM ITS PANELS.
4- UN-INSTALL PANELS SERVING ONLY A/C OR ROOM STOVES.
5- STAIRS AND COMMON AREA CORRIDORS ARE EXISTING TO REMAIN FOR HADDON AND CAMPTON BUILDINGS; EXISTING DEVICES TO BE RELOCATED IF IN AREA OF NEW SOFFIT WORK.
6- CONNECT ALL NEW BATTERY BACK-UP EMERGENCY LIGHTING LIGHT FIXTURES TO EXISTING LIGHTING CIRCUITS.
7- EXIT STAIRWAYS LIGHTING IS EXISTING TO REMAIN, NOT IN THE SCOPE OF WORKS.

PLAN NOTES:

1- ALL BUILDINGS COMMON AREA CORRIDOR RECEPTACLE'S LAY OUT IS EXISTING TO REMAIN, EXCEPT FOR THE POOL SUITES.
2- EXISTING STAIRS AND COMMON AREA CORRIDOR'S CIRCUITS TO REMAIN SERVING THE SAME LOADS.
3- RECEPTACLES LABELED 'E' ARE EXISTING TO REMAIN CONNECTED TO EXISTING CIRCUIT.
4- CONTRACTOR TO CONTACT ENGINEER IN CASE CIRCUITS SHOWN HAVE HIDDEN LOADS CONNECTED.
5- CONTRACTOR TO VERIFY ACTUAL LIGHTING AND RECEPTACLE LOADS ALL COMPLY WITH NEC MAXIMUM LOADING PER CIRCUIT.
6- FOR ALL EXISTING ELECTRICAL OUTLETS NOT SHOWN IN DRAWING, WIRES TO BE CAPPED AND J.BOX TO BE BLANK COVERED.
7- ALL GUESTROOM CIRCUITS TO STAY AS IS, FED FROM EXISTING PANELS, EXCEPT FOR THE NEW POOL SUITES.
8- CAP DEAD ALL WIRES SERVING OLD STOVE RECEPTACLES AND WINDOW A/C UNITS. BLANK COVER RESPECTIVE JUNCTION BOXES.
9- REFER TO E2 SERIES DRAWINGS FOR LAYOUT IN GUESTROOM UNITS.
10- PROVIDE 90 MINUTES BATTERY BACK UP FOR ALL LIGHT FIXTURES LABELED 'EM'
11- PROVIDE MINIMUM 10fc ILLUMINATION FOR ALL EXIT STAIRS. VERIFY EXISTING LIGHTING LEVELS COMPLY WITH CODE REQUIREMENTS.

POOL BELOW

PROPERTY LINE

POOL SUITES AREA "C"

JUNCTION BOX AT SOFFIT ABOVE - TYP. 4 LOCATIONS

CIRCUITS: P1A-2, P1A-4, P1A-6,8
CIRCUITS: P1A-10, P1A-12, P1A-14, P1A-6,8
CIRCUITS: P1A-16, P1A-18, P1A-6,8
CIRCUITS: P1A-20, P1A-22, P1A-6,8

P1B-30
P1A-6,8
P1B
P1B-18
P1B-24

BALCONY
BREEZEWAY
ROOF
ELEV.
STAIRS #1
REQ. 215
REQ. 214
UP
DN.

EXISTING ROOMS ELECTRICAL PANEL. SEE NOTES 1, 3 AND 4.

PANEL 'C2C'
CRN-16,18
CRN-12,14
CRN-20,22

PANEL 'C2B'
CRS-20,22
CRS-12,14

EXISTING ROOMS ELECTRICAL PANEL. SEE NOTES 1, 3 AND 4.

CAMPTON APTS. AREA 'B'

PANEL 'H2A'
HMN-14,16
HMN-13,15
HMN-10,12

PANEL 'H2B'
HMS-2,4
HMS-6,8

PANEL 'H2C'
HMS-10,12

EXISTING 208/120 VOLTS 1ϕ, 3 WIRES ELECTRICAL PANEL

HADDON HALL AREA 'A'

CORRIDOR 200
CORRIDOR 205
CORRIDOR 201
MAID'S CLOSET 203
STAIRS 5A
STAIRS 5B

SECOND FLOOR ELECTRICAL PLAN
SCALE: 1/8"=1'-0"

HADDON HALL
1500 COLLINS AVE
MIAMI BEACH, FL

KEYPLAN N.T.S.

REVISIONS

NO.	DESCRIPTION	ISSUE DATE
1	100% CD COORD. REVISION	2-18-14
2	PERMIT REVIEW COMMENTS	3-14-14

MTCI PRIVATE PROVIDER SERVICES, LLC
Construction Plans Review, Inspections, Testing & Consulting

	REVIEWER INITIALS	DATE REVIEWED
BUILDING		
STRUCTURAL		
MECHANICAL		
ELECTRICAL	JDC	11-10-14
PLUMBING		
SITE CIVIL		

100% CONSTRUCTION DOCUMENT SET

NORTH SEAL

Jonathan Cardello
Lic. # AR93391

ADD Inc Architecture Interiors Planning

One Biscayne Tower
Suite 1670
Two South
Biscayne Boulevard
Miami, Fl 33131
T. 305.482.8700
F. 305.482.8770
www.addinc.com
Lic. # AA26001507

Boston Miami

JOB NUMBER: 13036.00
CHECKED BY:
ISSUE DATE: MARCH 14, 2014
SCALE: AS NOTED

SHEET TITLE

SECOND FLOOR ELECTRICAL PLAN

STEVEN M. FELLER LICENSE No. 22046 STATE OF FLORIDA PROFESSIONAL ENGINEER
SEP 04 2014

STEVEN FELLER P.E.,PL
FLORIDA P.E. Reg. # 22046
Certificate of Authorization # EO0003427
200 N.E. THIRD AVENUE
FORT LAUDERDALE, FLORIDA 33301
PH: 954.467.1402 FAX: 954.467.5752
e-mail: fellerpe@fellerpe.com
JOB # 13153

APPROVED MIAMI BEACH FIRE DEPARTMENT

SHEET NUMBER

E1.03

COPYRIGHT ADD INC 2011

File: C:\Revit\Haddon_Hall\A_Revision 12_Electrical\E1.03_Second_Floor_1-8.dwg | Layout: E1.03
User: greg.lee | Saved: 9/4/2014 11:15:02 AM

SCOPE OF WORK:

1- REFURBISH EXISTING PANELS 'H2A' AND 'HAB' AND 'HAC' TO "AS NEW CONDITION". UNINSTALL ALL CIRCUITS FEEDING EXISTING WALL WHERE REQUIRED.
2- RECONNECT NEW RECEPTACLES IN CAMPTON GUESTROOMS TO EXISTING RECEPTACLE CIRCUIT IN BEDROOM.
3- DISCONNECT ALL ROOM STOVE CIRCUITS AND ROOM WINDOW A/C CIRCUITS FROM ITS PANELS.
4- UN-INSTALL PANELS SERVING ONLY A/C OR ROOM STOVES LOCATED IN NEW IT ROOM.
5- STAIRS AND COMMON AREA CORRIDORS ARE EXISTING TO REMAIN FOR HADDON AND CAMPTON BUILDINGS. EXISTING DEVICES TO BE RELOCATED IF IN AREA OF NEW SOFFIT WORK.
6- CONNECT ALL NEW BATTERY BACK-UP EMERGENCY LIGHTING LIGHT FIXTURES TO EXISTING LIGHTING CIRCUITS.
7- EXIT STAIRWAYS LIGHTING IS EXISTING TO REMAIN, NOT IN THE SCOPE OF WORKS.

PLAN NOTES:

1- ALL BUILDINGS COMMON AREA CORRIDOR RECEPTACLE'S LAY OUT IS EXISTING TO REMAIN, EXCEPT FOR THE POOL SUITES.
2- EXISTING STAIRS AND COMMON AREA CORRIDOR'S CIRCUITS TO REMAIN SERVING THE SAME LOADS.
3- RECEPTACLES LABELED 'E' ARE EXISTING TO REMAIN CONNECTED TO EXISTING CIRCUIT.
4- CONTRACTOR TO CONTACT ENGINEER IN CASE CIRCUITS SHOWN HAVE HIDDEN LOADS CONNECTED.
5- CONTRACTOR TO VERIFY ACTUAL LIGHTING AND RECEPTACLE LOADS ALL COMPLY WITH NEC MAXIMUM LOADING PER CIRCUIT.
6- FOR ALL EXISTING ELECTRICAL OUTLETS NOT SHOWN IN DRAWING, WIRES TO BE CAPPED AND J-BOX TO BE BLANK COVERED.
7- ALL GUESTROOM CIRCUITS TO STAY AS IS, FED FROM EXISTING PANELS, EXCEPT FOR THE NEW POOL SUITES.
8- CAP DEAD ALL WIRES SERVING OLD STOVE RECEPTACLES AND WINDOW A/C UNITS. BLANK COVER RESPECTIVE JUNCTION BOXES.
9- REFER TO E2 SERIES DRAWINGS FOR LAYOUT IN GUESTROOM UNITS.
10- PROVIDE 90 MINUTES BATTERY BACK UP FOR ALL LIGHT FIXTURES LABELED 'EM'
11- PROVIDE MINIMUM 10fc ILLUMINATION FOR ALL EXIT STAIRS. VERIFY EXISTING LIGHTING LEVELS COMPLY WITH CODE REQUIREMENTS.

POOL (BELOW)

POOL SUITES AREA "C"

JUNCTION BOX AT SOAR DRIVE - TYP. 4 LOCATIONS

BALCONY

CIRCUITS: P1A-25, P1A-25, P1A-27,29

CIRCUITS: P1A-25, P1A-25, P1A-27,29

CIRCUITS: P1A-25, P1A-25, P1A-27,29

CIRCUITS: P1A-24, P1A-26, P1A-27,29

AHU A

P1B-30

P1A-27,29

P1B-19

P1B-18

P1B-20

ROOF

ELEV.

STAIRS 1

BREEZEWAY

HMS-17,19

HMN-22,24

HMN-21,23

HMN-18,20

HMS-18,20

HMS-22,24

HMS-26,28

HMS-30,32

EXISTING ROOMS ELECTRICAL PANEL. SEE NOTES 1, 3 AND 4.

NEW PANEL H1T

IT ROOM 301

PANEL H3A

PANEL H3B

PANEL H3C

CORRIDOR 300

CORRIDOR 303

CORRIDOR 305

HADDON HALL AREA 'A'

CAMPTON APTS. AREA 'B'

UTILITY ROOM

STAIRS 3B

STAIRS 4B

STAIRS 5B

STAIRS 6B

STAIRS 7B

STAIRS 8B

STAIRS 1A

STAIRS 2A

STAIRS 3A

STAIRS 4A

STAIRS 5A

STAIRS 6A

ELEVATOR

CLOSET 100

CRN-1,3,5

ACCU-16

ACCU-18

CRN-6

CRN-13,15,17

CU-7

CRN-31,33

CRN-6

CRN-2,4

CU-1

CRN-25,27,29

KSF-1

CRN-19,21,23

KEF-1

CRS-7,9,11

CRS-6

ACCU-20

CRS-1,3,5

ACCU-19

CRS-2,4

CU-2

CRS-6

CB1-19,21,23

REMOTE REFRIG. RACK (FOOD SERVICE E-13)

ARC. LOUVER @ EL.

PROPERTY LINE

SEP 04 2014

APPROVED MIAMI BEACH FIRE DEPARTMENT

STEVEN M. FELLER LICENSE No. 22046 STATE OF FLORIDA PROFESSIONAL ENGINEER

THIRD FLOOR POWER AND LIGHTIN PLAN

SCALE: 1/8"=1'-0"

STEVEN FELLER P.E., PL
FLORIDA P.E. Reg. # 22046
Certificate of Authorization # 00003427
500 N.E. THIRD AVENUE
FORT LAUDERDALE, FLORIDA 33301
PH: 954.467.1402 FAX: 954.467.5752
e-mail: fellerpe@fellerpe.com
JOB # 13153

HADDON HALL
1500 COLLINS AVE

MIAMI BEACH, FL

KEYPLAN N.T.S.

REVISIONS

NO.	DESCRIPTION	ISSUE DATE
1	100% CD COORD. REVISION	2-18-14
2	PERMIT REVIEW COMMENTS	3-14-14
3	COORD. REVISION	3-14-14
9	KITCHEN RELOCATION	5-30-14
10	FIRE REVIEW COMMENTS	6-26-14

MTCI
PRIVATE PROVIDER SERVICES, LLC
Construction Plans Review - Inspections - Administration

	REVIEWER INITIALS	DATE REVIEWED
BUILDING		
STRUCTURAL		
MECHANICAL		
ELECTRICAL	TDC	11-10-14
PLUMBING		E
SITE CIVIL		

100% CONSTRUCTION DOCUMENT SET

NORTH

SEAL

Jonathan Cardello
Lic. # AR93391

ADD Inc Architecture Interiors Planning

One Biscayne Tower
Suite 1670
Two South
Biscayne Boulevard
Miami, Fl 33131
T. 305.482.8700
F. 305.482.8770
www.addinc.com
Lic. # AA26001507

Boston Miami

JOB NUMBER: 13036.00

CHECKED BY:

ISSUE DATE: MARCH 14, 2014

SCALE: AS NOTED

SHEET TITLE

THIRD FLOOR ELECTRICAL PLAN

SHEET NUMBER

E1.04

COPYRIGHT ADD INC 2011

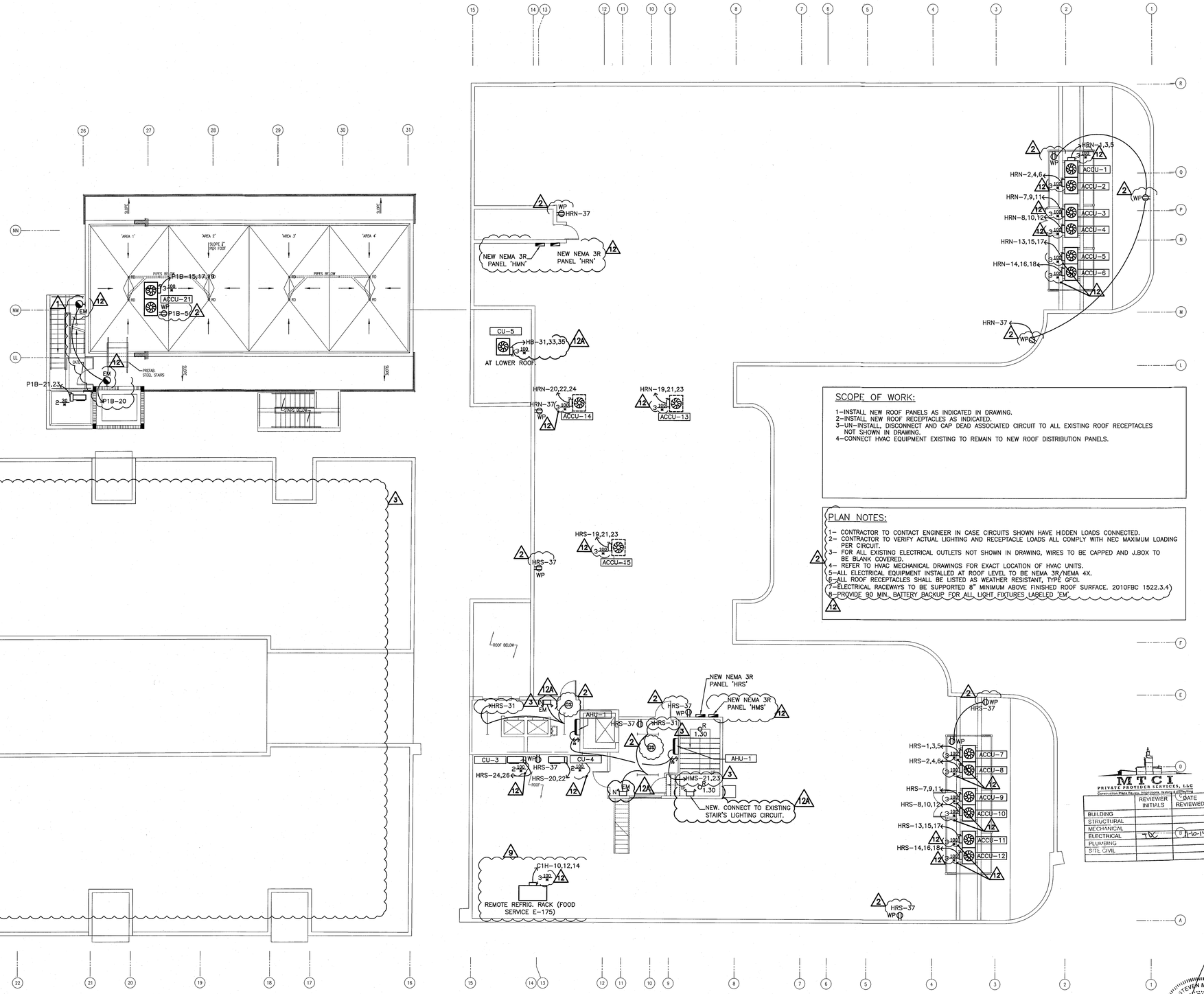

SCOPE OF WORK:

1–INSTALL NEW ROOF PANELS AS INDICATED IN DRAWING.
2–INSTALL NEW ROOF RECEPTACLES AS INDICATED.
3–UN–INSTALL, DISCONNECT AND CAP DEAD ASSOCIATED CIRCUIT TO ALL EXISTING ROOF RECEPTACLES NOT SHOWN IN DRAWING.
4–CONNECT HVAC EQUIPMENT EXISTING TO REMAIN TO NEW ROOF DISTRIBUTION PANELS.

PLAN NOTES:

1– CONTRACTOR TO CONTACT ENGINEER IN CASE CIRCUITS SHOWN HAVE HIDDEN LOADS CONNECTED.
2– CONTRACTOR TO VERIFY ACTUAL LIGHTING AND RECEPTACLE LOADS ALL COMPLY WITH NEC MAXIMUM LOADING PER CIRCUIT.
3– FOR ALL EXISTING ELECTRICAL OUTLETS NOT SHOWN IN DRAWING, WIRES TO BE CAPPED AND J.BOX TO BE BLANK COVERED.
4– REFER TO HVAC MECHANICAL DRAWINGS FOR EXACT LOCATION OF HVAC UNITS.
5–ALL ELECTRICAL EQUIPMENT INSTALLED AT ROOF LEVEL TO BE NEMA 3R/NEMA 4X.
6–ALL ROOF RECEPTACLES SHALL BE LISTED AS WEATHER RESISTANT, TYPE GFCI.
7–ELECTRICAL RACEWAYS TO BE SUPPORTED 8" MINIMUM ABOVE FINISHED ROOF SURFACE. 2010FBC 1522.3.4
8–PROVIDE 90 MIN. BATTERY BACKUP FOR ALL LIGHT FIXTURES LABELED 'EM'.

ELECTRICAL ROOF PLAN

SCALE: 1/8"=1'-0"

HADDON HALL
1500 COLLINS AVE.
MIAMI BEACH, FL

KEYPLAN N.T.S.

REVISIONS

NO.	DESCRIPTION	ISSUE DATE
1	100% CD COORD. REVISION	2–18–14
2	PERMIT REVIEW COMMENTS	3–14–14
3	COORD. REVISION	3–14–14
9	KITCHEN RELOCATION	5–30–14
12	FIRE DPMT. PERMIT COMM.	8–21–14
12A	FIRE DPMT. PERMIT COMM.	9–29–14

100% CONSTRUCTION DOCUMENT SET

NORTH SEAL

Jonathan Cardello
Lic. # AR93391

ADD Inc Architecture Interiors Planning

One Biscayne Tower
Suite 1670
Two South
Biscayne Boulevard
Miami, Fl 33131
T. 305.482.8700
F. 305.482.8770
www.addinc.com
Lic. # AA26001507

Boston Miami

MTCI
PRIVATE PROVIDER SERVICES, LLC
Construction Plans Review, Inspections, Training & Consulting

	REVIEWER INITIALS	DATE REVIEWED
BUILDING		
STRUCTURAL		
MECHANICAL		
ELECTRICAL	TV	8-10-14
PLUMBING		
SITE CIVIL		

JOB NUMBER: 13036.00
CHECKED BY:
ISSUE DATE: MARCH 14, 2014
SCALE: AS NOTED

SHEET TITLE

ELECTRICAL ROOF PLAN

OCT 09 2014
STEVEN M. FELLER LICENSE No. 22046 STATE OF FLORIDA PROFESSIONAL ENGINEER
APPROVED MIAMI BEACH FIRE DEPARTMENT

STEVEN FELLER P.E., P.L.
FLORIDA P.E. Reg. # 22046
Certificate of Authorization # 00003427
500 N.E. THIRD AVENUE
FORT LAUDERDALE, FLORIDA 33301
PH: 954.467.1402 FAX: 954.467.5752
e-mail: fellerpe@fellerpe.com
JOB # 13153

SHEET NUMBER

E1.05

COPYRIGHT ADD INC 2011

PLAN NOTES:

1–REFER TO ALL LEVELS 1/8" SCALE FLOOR PLAN DRAWINGS FOR HVAC EQUIPMENT SERVING EACH GUESTROOM UNIT AND CORRESPONDENT CIRCUIT.
2–ALL RECEPTACLES AND SWITCHES SHOWN ARE EXISTING TO REMAIN, (LABELED 'E'). DEVICES LABELED 'N' TO DENOTE NEW DEVICE. DEVICES LABELED 'R' TO DENOTE EXISTING FIXTURE REPLACED BY NEW MODEL WITH LESS WATTAGE. SEE LIGHTING FIXTURES SCHEDULE.
3–CONNECT ALL NEW RECEPTACLES AND SWITCHES TO EXISTING ROOM RECEPTACLE'S/LIGHTING CIRCUIT.
4–ALL RECEPTACLES IN HOTEL GUESTROOMS TO BE TAMPER RESISTANT.
5–CONTRACTOR TO VERIFY ACTUAL LOADING IN EACH CIRCUIT COMPLIES WITH MAXIMUM PERMITTED BY CURRENT NEC CODE.
6–ADA COMPLIANCE DEVICES SHOWN ONLY FOR ADA/HEARING IMPAIRED TYPE UNITS.
7–REFER TO HVAC DRAWINGS FOR EXACT LOCATION OF ALL HVAC UNITS.
8–CONNECT SMOKE DETECTORS IN GUESTROOMS TO ROOM LIGHTING CIRCUIT. BY–PASS ALL LIGHTING CONTROL TO FEED THIS DEVICE.
9–REFER TO ID DRAWINGS FOR EXACT MOUNTING HEIGHT AND LOCATION OF ALL RECEPTACLES AND WALL MOUNTED LIGHT FIXTURES.
10–POOL SUITES ELECTRICAL DEVICES LABELED "L" INDICATES DEVICE CONNECTED TO ROOM LIGHTING CIRCUIT. REFER TO PANEL P1A PANEL SCHEDULE.
11–POOL SUITES ELECTRICAL DEVICES LABELED "R" INDICATES DEVICE CONNECTED TO ROOM RECEPTACLES CIRCUIT. REFER TO PANEL P1A PANEL SCHEDULE.
12–ALL INSTALLATION IN THE POOL SUITES BUILDING IS NEW.
13–PROVIDE COMBINATION SMOKE DETECTOR/STROBE FOR ALL HOTEL GUESTROOM SMOKE DETECTORS.
14–GUESTROOM'S STROBE TO BE ACTIVATED BY SYSTEM FIRE ALARM AND BY ROOM SMOKE ALARM.

GUESTROOM FIRE ALARM KEYNOTES

1. PROVIDE BATTERY BACK–UP 120 VOLT SMOKE DETECTORS AT EACH GUESTROOM AND CONNECT ALL DETECTORS WITHIN EACH UNIT SO THAT ALARM FROM ANY DETECTOR SOUNDS THE ALARM AT ALL DETECTORS WITHIN THE SUITE. MOUNT ON WALL @ A MINIMUM OF 4" FROM THE CEILING (TO THE TOP OF THE DETECTOR) AND MAXIMUM OF 12" FROM THE CELING. (TO THE BOTTOM OF THE DETECTOR)
2. GUESTROOM FIRE ALARM HORN TIED TO MAIN BUILDING FIRE ALARM SYSTEM. COORDINATE EXACT LOCATION WITH INTERIOR DESIGNER ELEVATIONS. LOCATION MUST MEET NFPA DB REQUIREMENTS.
3. PROVIDE PUSH BUTTON OUTSIDE THE DOOR FOR HEARING IMPAIRED ROOMS. CONNECT TO STROBE(S) INSIDE THE ROOM.
4. SMOKE DETECTOR IN ACCESSIBLE AND HEARING IMPAIRED ROOMS ONLY. TO ACTIVATE LOCAL AREA 177 CD STROBE LIGHT (TYPICAL).
5. PROVIDE FLASHING STROBE LIGHT AT 110 CANDELLA. MOUNT 24" FROM CEILING IN ACCESSIBLE AND HEARING IMPAIRED ROOMS ONLY. TIE TO CENTRAL SYSTEM. VISUAL ALARMS IN ADA COMPLIANT ROOMS MUST BE ACTIVATED BY BOTH: STAND ALONE 120 VOLTS INITIATION DEVICE IN ROOM AND BY BUILDING FIRE ALARM SYSTEM.
6. PROVIDE FLASHING STROBE LIGHT AT 75 CANDELLA IN BATHROOM IN ACCESSIBLE AND HEARING IMPAIRED ROOMS ONLY. TIE TO CENTRAL SYSTEM. VISUAL ALARMS IN ADA COMPLIANT ROOMS MUST BE ACTIVATED BY BOTH: STAND ALONE 120 VOLTS INITIATION DEVICE IN ROOM AND BY BUILDING FIRE ALARM SYSTEM.

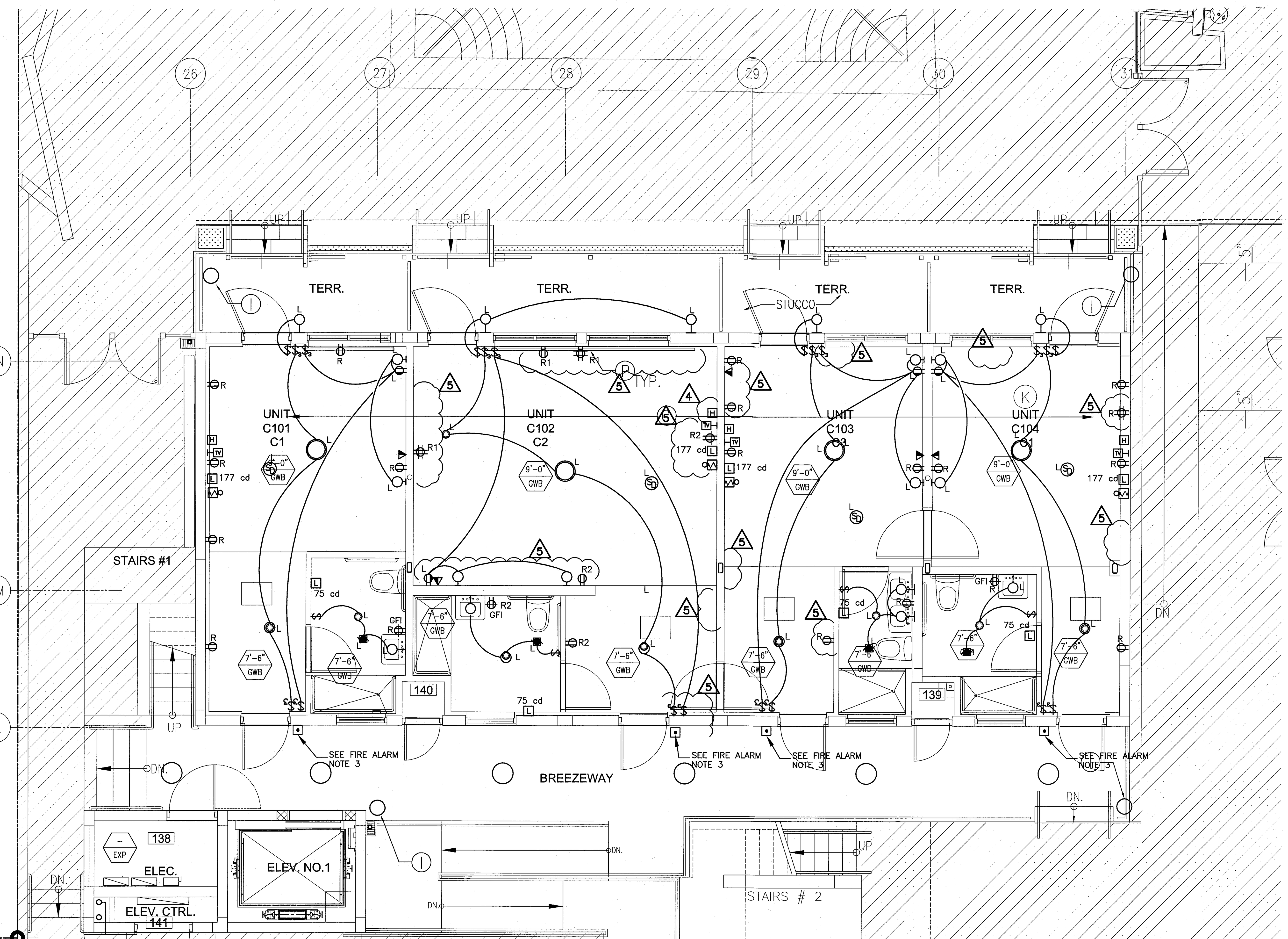

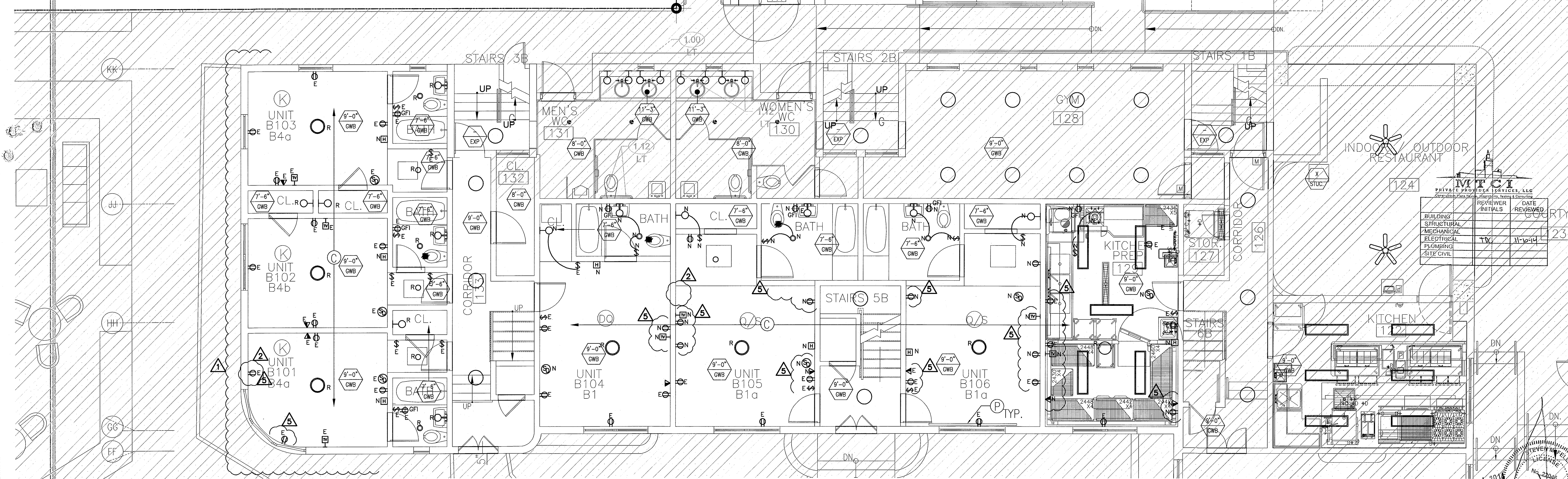

TYPICAL ENLARGED UNITS ELECTRICAL PLAN

SCALE: 1/4"=1'-0"

MTCI PRIVATE PROVIDER SERVICES, LLC
Construction Plans Review, Inspections, Testing & Consulting

	REVIEWER INITIALS	DATE REVIEWED
BUILDING		
STRUCTURAL		
MECHANICAL		
ELECTRICAL	TDC	11-10-14
PLUMBING		
SITE CIVIL		

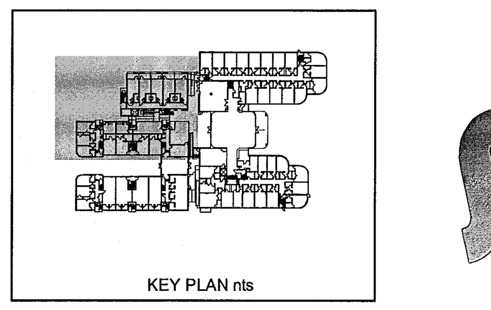

KEY PLAN nts

SEP 04 2014

STEVEN FELLER P.E.,PL
FLORIDA P.E. Reg. # 22046
Certificate of Authorization # 00003427
500 N.E. THIRD AVENUE
FORT LAUDERDALE, FLORIDA 33301
PH: 954.467.1402 FAX: 954.467.5752
e-mail: fellerpe@fellerpe.com
JOB # 13153

STEVEN M. FELLER LICENSE No. 22046 STATE OF FLORIDA PROFESSIONAL ENGINEER

APPROVED MIAMI BEACH FIRE DEPARTMENT

HADDON HALL
1500 COLLINS AVE

MIAMI BEACH, FL

KEYPLAN N.T.S.

REVISIONS

NO.	DESCRIPTION	ISSUE DATE
1	100% CD COORD. REVISION	2–18–14
2	PERMIT REVIEW COMMENTS	3–14–14
4	FIRE REVIEW COMMENTS	4–7–14
5	GUESTROOM COORDINATION	3–14–14
12	FIRE DPMT. PERMIT COMM.	8–21–14

100% CONSTRUCTION DOCUMENT SET

NORTH SEAL

Jonathan Cardello
Lic. # AR93391

ADD Inc Architecture Interiors Planning

One Biscayne Tower
Suite 1670
Two South
Biscayne Boulevard
Miami, Fl 33131
T. 305.482.8700
F. 305.482.8770
www.addinc.com
Lic. # AA26001507

Boston Miami

JOB NUMBER:	13036.00
CHECKED BY:	
ISSUE DATE:	MARCH 14, 2014
SCALE:	AS NOTED

SHEET TITLE

ENLARGED UNITS ELECTRICAL PLAN

SHEET NUMBER

E2.01

COPYRIGHT ADD INC 2011

File: E:\Haddon Hall\E_Revision 12 Electrical\E2.01,E2.02,E2.03,E2.04,E2.05 Enlarged TypicalUnits.dwg | Layout: 201
User: greg | Date: Thursday, September 4 2014 12:17:11 PM

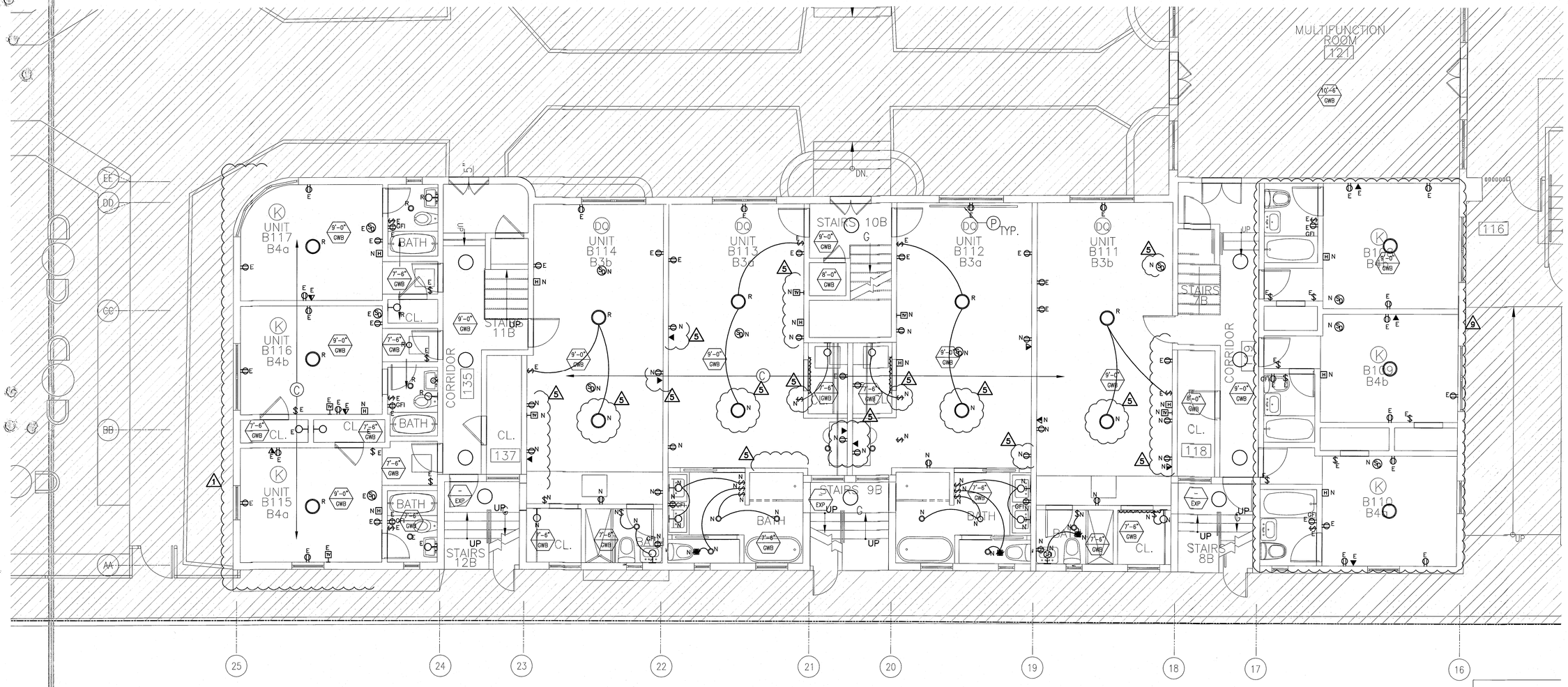

PLAN NOTES:

1–REFER TO ALL LEVELS 1/8" SCALE FLOOR PLAN DRAWINGS FOR HVAC EQUIPMENT SERVING EACH GUESTROOM UNIT AND CORRESPONDENT CIRCUIT.
2–ALL RECEPTACLES AND SWITCHES SHOWN ARE EXISTING TO REMAIN, (LABELED 'E'). DEVICES LABELED 'N' TO DENOTE NEW DEVICE. DEVICES LABELED 'R' TO DENOTE EXISTING FIXTURE REPLACED BY NEW MODEL WITH LESS WATTAGE. SEE LIGHTING FIXTURES SCHEDULE.
3–CONNECT ALL NEW RECEPTACLES AND SWITCHES TO EXISTING ROOM RECEPTACLE'S CIRCUIT.
4–ALL RECEPTACLES IN HOTEL GUESTROOMS TO BE TAMPER RESISTANT.
5–CONTRACTOR TO VERIFY ACTUAL LOADING IN EACH CIRCUIT COMPLIES WITH MAXIMUM PERMITED BY CURRENT NEC CODE.
6–ADA COMPLIANCE DEVICES SHOWN ONLY FOR ADA/HEARING IMPAIRED TYPE UNITS.
7–REFER TO HVAC DRAWINGS FOR EXACT LOCATION OF ALL HVAC UNITS.
8–CONNECT SMOKE DETECTORS IN GUESTROOMS TO ROOM LIGHTING CIRCUIT. BY–PASS ALL LIGHTING CONTROL TO FEED THIS DEVICE.
9–REFER TO ID DRAWINGS FOR EXACT MOUNTING HEIGHT AND LOCATION OF ALL RECEPTACLES AND WALL MOUNTED LIGHT FIXTURES.
10–PROVIDE COMBINATION SMOKE DETECTOR/STROBE FOR ALL HOTEL GUESTROOM SMOKE DETECTORS.
11–GUESTROOM'S STROBE TO BE ACTIVATED BY SYSTEM FIRE ALARM AND BY ROOM SMOKE ALARM.

LABELS LEGEND:

E–EXISTING.
N–NEW.
R–REPLACED.

GUESTROOM FIRE ALARM KEYNOTES

1. PROVIDE BATTERY BACK–UP 120 VOLT SMOKE DETECTOR IN EACH GUESTROOM AND CONNECT ALL DETECTORS WITHIN EACH UNIT SO THAT ALARM FROM ANY DETECTOR SOUNDS THE ALARM AT ALL DETECTORS WITHIN THE SUITE. MOUNT ON WALL @ A MINIMUM OF 4" FROM THE CEILING (TO THE TOP OF THE DETECTOR) AND MAXIMUM OF 12" FROM THE CELING. (TO THE BOTTOM OF THE DETECTOR)
2. GUESTROOM FIRE ALARM HORN TIED TO MAIN BUILDING FIRE ALARM SYSTEM. COORDINATE EXACT LOCATION WITH INTERIOR DESIGNER ELEVATIONS. LOCATION MUST MEET NFPA 72 REQUIREMENTS.
3. PROVIDE PUSH BUTTON OUTSIDE THE DOOR FOR HEARING IMPAIRED ROOMS. CONNECT TO STROBE(S) INSIDE THE ROOM.
4. SMOKE DETECTOR IN ACCESSIBLE AND HEARING IMPAIRED ROOMS ONLY, TO ACTIVATE LOCAL AREA 177 CD STROBE LIGHT (TYPICAL).
5. PROVIDE FLASHING STROBE LIGHT AT 110 CANDELLA. MOUNT 24" FROM CEILING IN ACCESSIBLE AND HEARING IMPAIRED ROOMS ONLY. TIE TO CENTRAL SYSTEM. VISUAL ALARMS IN ADA COMPLIANT ROOMS MUST BE ACTIVATED BY BOTH: STAND ALONE 120 VOLTS INITIATION DEVICE IN ROOM AND BY BUILDING FIRE ALARM SYSTEM.
6. PROVIDE FLASHING STROBE LIGHT AT 75 CANDELLA IN BATHROOM IN ACCESSIBLE AND HEARING IMPAIRED ROOMS ONLY. TIE TO CENTRAL SYSTEM. VISUAL ALARMS IN ADA COMPLIANT ROOMS MUST BE ACTIVATED BY BOTH: STAND ALONE 120 VOLTS INITIATION DEVICE IN ROOM AND BY BUILDING FIRE ALARM SYSTEM.

REVIEWER	INITIALS	DATE REVIEWED
BUILDING		
STRUCTURAL		
MECHANICAL		
ELECTRICAL	TBK	11-10-14
PLUMBING		

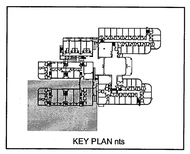

STEVEN FELLER P.E.,PL
FLORIDA P.E. Reg. # 22046
Certificate of Authorization # 00003427
500 N.E. THIRD AVENUE
FORT LAUDERDALE, FLORIDA 33301
PH: 954.467.1402 FAX: 954.467.5752
e-mail: fellerpe@fellerpe.com
JOB # 13153

SEP 04 2014

STEVEN M. FELLER LICENSE No 22046 STATE OF FLORIDA PROFESSIONAL ENGINEER

APPROVED MIAMI BEACH FIRE DEPARTMENT

TYPICAL ENLARGED UNITS ELECTRICAL PLAN

SCALE: 1/4"=1'-0"

HADDON HALL
1500 COLLINS AVE
MIAMI BEACH, FL

KEYPLAN N.T.S.

REVISIONS

NO.	DESCRIPTION	ISSUE DATE
1	100% CD COORD. REVISION	2-18-14
2	PERMIT REVIEW COMMENTS	3-14-14
5	GUESTROOM COORDINATION	3-14-14
9	KITCHEN RELOCATION	5-30-14
12	FIRE DPMT. PERMIT COMM.	8-21-14

100% CONSTRUCTION DOCUMENT SET

NORTH SEAL

Jonathan Cardello
Lic. # AR93391

ADD Inc Architecture Interiors Planning

One Biscayne Tower
Suite 1670
Two South
Biscayne Boulevard
Miami, Fl 33131
T. 305.482.8700
F. 305.482.8770
www.addinc.com
Lic. # AA26001507

Boston Miami

JOB NUMBER: 13036.00
CHECKED BY:
ISSUE DATE: MARCH 14, 2014
SCALE: AS NOTED

SHEET TITLE

ENLARGED UNITS ELECTRICAL PLAN

SHEET NUMBER

E2.02

COPYRIGHT ADD INC 2011

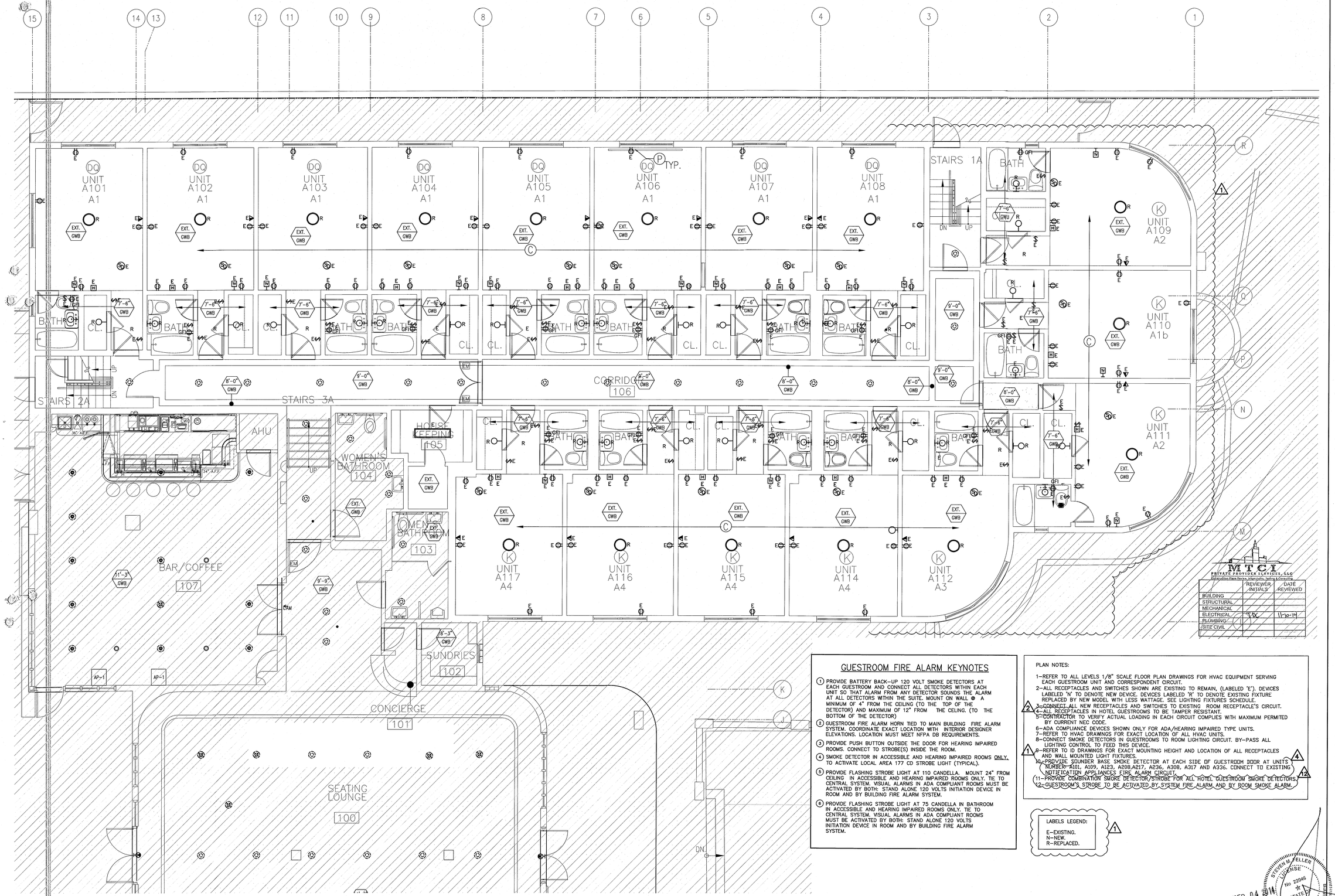

GUESTROOM FIRE ALARM KEYNOTES

1. PROVIDE BATTERY BACK-UP 120 VOLT SMOKE DETECTORS AT EACH GUESTROOM AND CONNECT ALL DETECTORS WITHIN EACH UNIT SO THAT ALARM FROM ANY DETECTOR SOUNDS THE ALARM AT ALL DETECTORS WITHIN THE SUITE. MOUNT ON WALL @ A MINIMUM OF 4" FROM THE CEILING (TO THE TOP OF THE DETECTOR) AND MAXIMUM OF 12" FROM THE CELING. (TO THE BOTTOM OF THE DETECTOR)
2. GUESTROOM FIRE ALARM HORN TIED TO MAIN BUILDING FIRE ALARM SYSTEM. COORDINATE EXACT LOCATION WITH INTERIOR DESIGNER ELEVATIONS. LOCATION MUST MEET NFPA DB REQUIREMENTS.
3. PROVIDE PUSH BUTTON OUTSIDE THE DOOR FOR HEARING IMPAIRED ROOMS. CONNECT TO STROBE(S) INSIDE THE ROOM.
4. SMOKE DETECTOR IN ACCESSIBLE AND HEARING IMPAIRED ROOMS ONLY. TO ACTIVATE LOCAL AREA 177 CD STROBE LIGHT (TYPICAL).
5. PROVIDE FLASHING STROBE LIGHT AT 110 CANDELLA. MOUNT 24" FROM CEILING IN ACCESSIBLE AND HEARING IMPAIRED ROOMS ONLY. TIE TO CENTRAL SYSTEM. VISUAL ALARMS IN ADA COMPLIANT ROOMS MUST BE ACTIVATED BY BOTH: STAND ALONE 120 VOLTS INITIATION DEVICE IN ROOM AND BY BUILDING FIRE ALARM SYSTEM.
6. PROVIDE FLASHING STROBE LIGHT AT 75 CANDELLA IN BATHROOM IN ACCESSIBLE AND HEARING IMPAIRED ROOMS ONLY. TIE TO CENTRAL SYSTEM. VISUAL ALARMS IN ADA COMPLIANT ROOMS MUST BE ACTIVATED BY BOTH: STAND ALONE 120 VOLTS INITIATION DEVICE IN ROOM AND BY BUILDING FIRE ALARM SYSTEM.

PLAN NOTES:

1–REFER TO ALL LEVELS 1/8" SCALE FLOOR PLAN DRAWINGS FOR HVAC EQUIPMENT SERVING EACH GUESTROOM UNIT AND CORRESPONDENT CIRCUIT.
2–ALL RECEPTACLES AND SWITCHES SHOWN ARE EXISTING TO REMAIN, (LABELED 'E'). DEVICES LABELED 'N' TO DENOTE NEW DEVICE. DEVICES LABELED 'R' TO DENOTE EXISTING FIXTURE REPLACED BY NEW MODEL WITH LESS WATTAGE. SEE LIGHTING FIXTURES SCHEDULE.
3–CONNECT ALL NEW RECEPTACLES AND SWITCHES TO EXISTING ROOM RECEPTACLE'S CIRCUIT.
4–ALL RECEPTACLES IN HOTEL GUESTROOMS TO BE TAMPER RESISTANT.
5–CONTRACTOR TO VERIFY ACTUAL LOADING IN EACH CIRCUIT COMPLIES WITH MAXIMUM PERMITED BY CURRENT NEC CODE.
6–ADA COMPLIANCE DEVICES SHOWN ONLY FOR ADA/HEARING IMPAIRED TYPE UNITS.
7–REFER TO HVAC DRAWINGS FOR EXACT LOCATION OF ALL HVAC UNITS.
8–CONNECT SMOKE DETECTORS IN GUESTROOMS TO ROOM LIGHTING CIRCUIT. BY–PASS ALL LIGHTING CONTROL TO FEED THIS DEVICE.
9–REFER TO ID DRAWINGS FOR EXACT MOUNTING HEIGHT AND LOCATION OF ALL RECEPTACLES AND WALL MOUNTED LIGHT FIXTURES.
10–PROVIDE SOUNDER BASE SMOKE DETECTOR AT EACH SIDE OF GUESTROOM DOOR AT UNITS NUMBER: A101, A109, A123, A208,A217, A236, A308, A317 AND A336. CONNECT TO EXISTING NOTIFICATION APPLIANCES FIRE ALARM CIRCUIT.
11–PROVIDE COMBINATION SMOKE DETECTOR/STROBE FOR ALL HOTEL GUESTROOM SMOKE DETECTORS.
12–GUESTROOM'S STROBE TO BE ACTIVATED BY SYSTEM FIRE ALARM AND BY ROOM SMOKE ALARM.

LABELS LEGEND:
E–EXISTING.
N–NEW.
R–REPLACED.

TYPICAL ENLARGED UNITS ELECTRICAL PLAN

SCALE: 1/4"=1'-0"

KEY PLAN nts

STEVEN FELLER P.E.,PL
FLORIDA P.E.Reg. # 22046
Certificate of Authorization # 00003427
500 N.E. THIRD AVENUE
FORT LAUDERDALE, FLORIDA 33301
PH: 954.467.1402 FAX: 954.467.5752
e-mail: fellerpe@fellerpe.com
JOB # 13153

STEVEN M. FELLER LICENSE No. 22046 STATE OF FLORIDA PROFESSIONAL ENGINEER

SEP 04

APPROVED MIAMI BEACH FIRE DEPARTMENT

HADDON HALL
1500 COLLINS AVE
MIAMI BEACH, FL

KEYPLAN N.T.S.

REVISIONS

NO.	DESCRIPTION	ISSUE DATE
1	100% CD COORD. REVISION	02-18-14
2	PERMIT REVIEW COMMENTS	3-14-14
12	FIRE DPMT. PERMIT COMM.	8-21-14

MTCI
PRIVATE PROVIDER SERVICES, LLC
Construction Plans Review, Inspections, Testing & Consulting

	REVIEWER INITIALS	DATE REVIEWED
BUILDING		
STRUCTURAL		
MECHANICAL		
ELECTRICAL	JDC	11-10-14
PLUMBING		
SITE CIVIL		

100% CONSTRUCTION DOCUMENT SET

NORTH SEAL

Jonathan Cardello
Lic. # AR93391

ADD Inc Architecture Interiors Planning

One Biscayne Tower
Suite 1670
Two South
Biscayne Boulevard
Miami, Fl 33131
T. 305.482.8700
F. 305.482.8770
www.addinc.com
Lic. # AA26001507

Boston Miami

JOB NUMBER: 13036.00
CHECKED BY:
ISSUE DATE: MARCH 14, 2014
SCALE: AS NOTED

SHEET TITLE

ENLARGED UNITS ELECTRICAL PLAN

SHEET NUMBER

E2.03

COPYRIGHT ADD INC 2011

GUESTROOM FIRE ALARM KEYNOTES

1. PROVIDE BATTERY BACK-UP 120 VOLT SMOKE DETECTORS AT EACH GUESTROOM AND CONNECT ALL DETECTORS WITHIN EACH UNIT SO THAT ALARM FROM ANY DETECTOR SOUNDS THE ALARM AT ALL DETECTORS WITHIN THE SUITE. MOUNT ON WALL @ A MINIMUM OF 4" FROM THE CEILING (TO THE TOP OF THE DETECTOR) AND MAXIMUM OF 12" FROM THE CEILING. (TO THE BOTTOM OF THE DETECTOR)
2. GUESTROOM FIRE ALARM HORN TIED TO MAIN BUILDING FIRE ALARM SYSTEM. COORDINATE EXACT LOCATION WITH INTERIOR DESIGNER ELEVATIONS. LOCATION MUST MEET NFPA DB REQUIREMENTS.
3. PROVIDE PUSH BUTTON OUTSIDE THE DOOR FOR HEARING IMPAIRED ROOMS. CONNECT TO STROBE(S) INSIDE THE ROOM.
4. SMOKE DETECTOR IN ACCESSIBLE AND HEARING IMPAIRED ROOMS ONLY. TO ACTIVATE LOCAL AREA 177 CD STROBE LIGHT (TYPICAL).
5. PROVIDE FLASHING STROBE LIGHT AT 110 CANDELLA. MOUNT 24" FROM CEILING. IN ACCESSIBLE AND HEARING IMPAIRED ROOMS ONLY. TIE TO CENTRAL SYSTEM. VISUAL ALARMS IN ADA COMPLIANT ROOMS MUST BE ACTIVATED BY BOTH: STAND ALONE 120 VOLTS INITIATION DEVICE IN ROOM AND BY BUILDING FIRE ALARM SYSTEM.
6. PROVIDE FLASHING STROBE LIGHT AT 75 CANDELLA IN BATHROOM IN ACCESSIBLE AND HEARING IMPAIRED ROOMS ONLY. TIE TO CENTRAL SYSTEM. VISUAL ALARMS IN ADA COMPLIANT ROOMS MUST BE ACTIVATED BY BOTH: STAND ALONE 120 VOLTS INITIATION DEVICE IN ROOM AND BY BUILDING FIRE ALARM SYSTEM.

PLAN NOTES:

1-REFER TO ALL LEVELS 1/8" SCALE FLOOR PLAN DRAWINGS FOR HVAC EQUIPMENT SERVING EACH GUESTROOM UNIT AND CORRESPONDENT CIRCUIT.
2-ALL RECEPTACLES AND SWITCHES SHOWN ARE EXISTING TO REMAIN, (LABELED 'E'). DEVICES LABELED 'N' TO DENOTE NEW DEVICE. DEVICES LABELED 'R' TO DENOTE EXISTING FIXTURE REPLACED BY NEW MODEL WITH LESS WATTAGE. SEE LIGHTING FIXTURES SCHEDULE.
3-CONNECT ALL NEW RECEPTACLES AND SWITCHES TO EXISTING ROOM RECEPTACLE'S CIRCUIT.
4-ALL RECEPTACLES IN HOTEL GUESTROOMS TO BE TAMPER RESISTANT.
5-CONTRACTOR TO VERIFY ACTUAL LOADING IN EACH CIRCUIT COMPLIES WITH MAXIMUM PERMITED BY CURRENT NEC CODE.
6-ADA COMPLIANCE DEVICES SHOWN ONLY FOR ADA/HEARING IMPAIRED TYPE UNITS.
7-REFER TO HVAC DRAWINGS FOR EXACT LOCATION OF ALL HVAC UNITS.
8-CONNECT SMOKE DETECTORS IN GUESTROOMS TO ROOM LIGHTING CIRCUIT. BY-PASS ALL LIGHTING CONTROL TO FEED THIS DEVICE.
9-REFER TO ID DRAWINGS FOR EXACT MOUNTING HEIGHT AND LOCATION OF ALL RECEPTACLES AND WALL MOUNTED LIGHT FIXTURES.
10-PROVIDE SOUNDER BASE SMOKE DETECTOR AT EACH SIDE OF GUESTROOM DOOR AT UNITS NUMBER: A101, A109, A123, A208,A217, A236, A308, A317 AND A336. CONNECT TO EXISTING NOTIFICATION APPLIANCES FIRE ALARM CIRCUIT.
11-PROVIDE COMBINATION SMOKE DETECTOR/STROBE FOR ALL HOTEL GUESTROOM SMOKE DETECTORS.
12-GUESTROOM'S STROBE TO BE ACTIVATED BY SYSTEM FIRE ALARM AND BY ROOM SMOKE ALARM.

LABELS LEGEND:
E-EXISTING.
N-NEW.
R-REPLACED.

HADDON HALL
1500 COLLINS AVE
MIAMI BEACH, FL

KEYPLAN N.T.S.

REVISIONS		
NO.	DESCRIPTION	ISSUE DATE
1	100% CD COORD. REVISION	2-18-14
2	PERMIT REVIEW COMMENTS	3-14-14
5	GUESTROOM COORDINATION	3-14-14
12	FIRE DPMT. PERMIT COMM.	8-21-14

100% CONSTRUCTION DOCUMENT SET

NORTH SEAL

Jonathan Cardello
Lic. # AR93391

ADD Inc Architecture Interiors Planning

One Biscayne Tower
Suite 1670
Two South
Biscayne Boulevard
Miami, Fl 33131
T. 305.482.8700
F. 305.482.8770
www.addinc.com
Lic. # AA26001507

Boston Miami

JOB NUMBER:	13036.00
CHECKED BY:	
ISSUE DATE:	MARCH 14, 2014
SCALE:	AS NOTED

SHEET TITLE

ENLARGED UNITS ELECTRICAL PLAN

SHEET NUMBER

E2.04

COPYRIGHT ADD INC 2011

MTCI
PRIVATE PROVIDER SERVICES, LLC
Certified Professionals in Plans, Inspections, Testing & Compliance

	REVIEWER INITIALS	DATE REVIEWED
BUILDING		
STRUCTURAL		
MECHANICAL		
ELECTRICAL	TDC	11-10-14
PLUMBING		
FIRE		

RECEIVED
SEP 04 2014
PLANNING & ZONING

STEVEN M. FELLER LICENSE No 22046 STATE OF FLORIDA PROFESSIONAL ENGINEER

APPROVED MIAMI BEACH FIRE DEPARTMENT

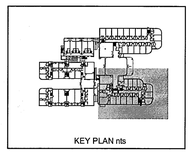

KEY PLAN nts

STEVEN FELLER P.E.,PL
FLORIDA P.E. Reg. # 22046
Certificate of Authorization # 00003427
500 N.E. THIRD AVENUE
FORT LAUDERDALE, FLORIDA 33301
PH: 954.467.1402 FAX: 954.467.5752
e-mail: fellerpe@fellerpe.com
JOB # 13133

TYPICAL ENLARGED UNITS ELECTRICAL PLAN

SCALE: 1/4"=1'-0"

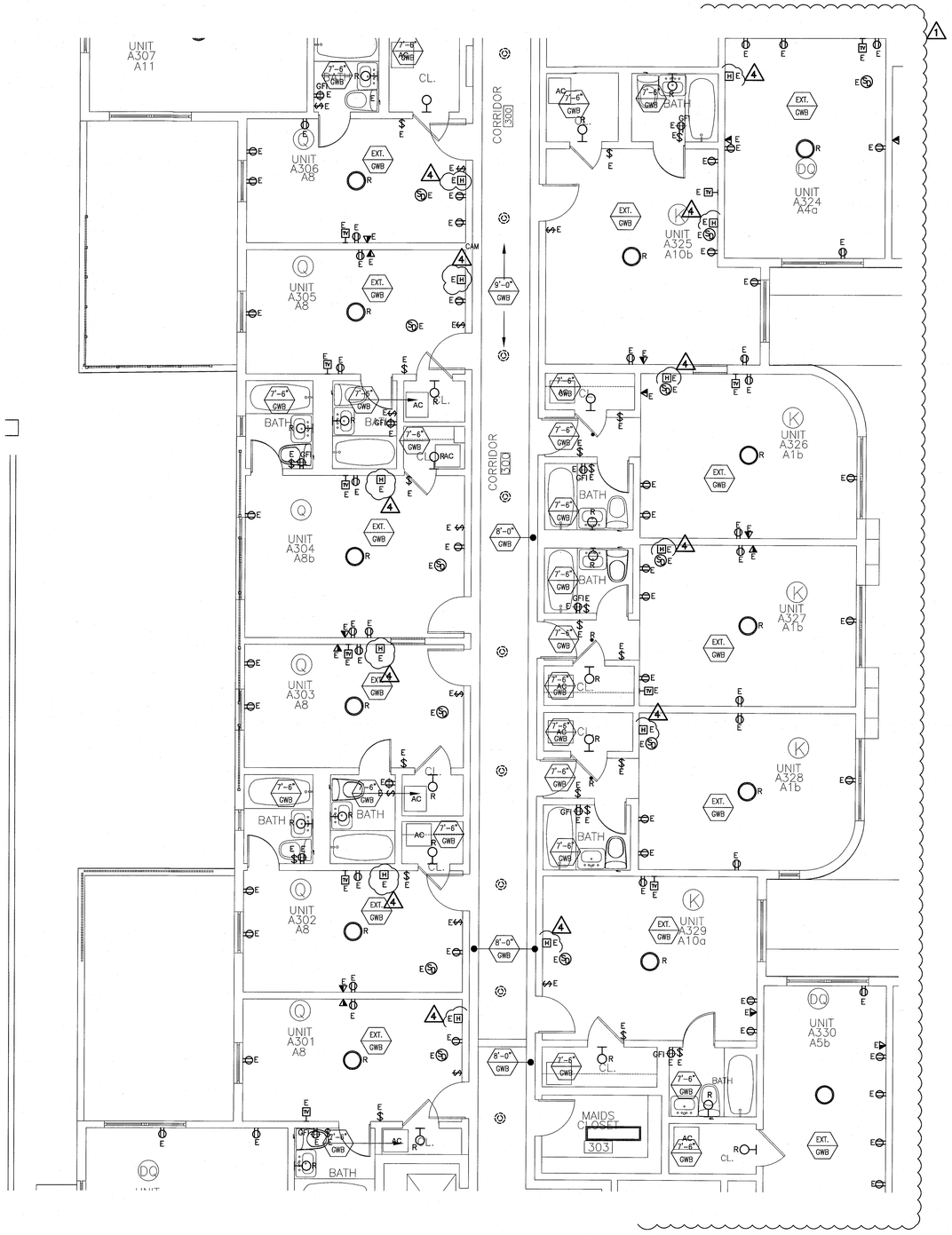

PLAN NOTES:

1–REFER TO ALL LEVELS 1/8" SCALE FLOOR PLAN DRAWINGS FOR HVAC EQUIPMENT SERVING EACH GUESTROOM UNIT AND CORRESPONDENT CIRCUIT.
2–ALL RECEPTACLES AND SWITCHES SHOWN ARE EXISTING TO REMAIN, (LABELED 'E'). DEVICES LABELED 'N' TO DENOTE NEW DEVICE. DEVICES LABELED 'R' TO DENOTE EXISTING FIXTURE REPLACED BY NEW MODEL WITH LESS WATTAGE. SEE LIGHTING FIXTURES SCHEDULE.
3–CONNECT ALL NEW RECEPTACLES AND SWITCHES TO EXISTING ROOM RECEPTACLE'S CIRCUIT.
4–ALL RECEPTACLES IN HOTEL GUESTROOMS TO BE TAMPER RESISTANT.
5–CONTRACTOR TO VERIFY ACTUAL LOADING IN EACH CIRCUIT COMPLIES WITH MAXIMUM PERMITED BY CURRENT NEC CODE.
6–ADA COMPLIANCE DEVICES SHOWN ONLY FOR ADA/HEARING IMPAIRED TYPE UNITS.
7–REFER TO HVAC DRAWINGS FOR EXACT LOCATION OF ALL HVAC UNITS.
8–CONNECT SMOKE DETECTORS IN GUESTROOMS TO ROOM LIGHTING CIRCUIT. BY–PASS ALL LIGHTING CONTROL TO FEED THIS DEVICE.
9–REFER TO ID DRAWINGS FOR EXACT MOUNTING HEIGHT AND LOCATION OF ALL RECEPTACLES AND WALL MOUNTED LIGHT FIXTURES.
10–GUESTROOMS ACTUAL RECEPTACLES LAYOUT TO MATCH DEPICTED LAYOUT FOR EACH ROOM TYPE.
11–ELECTRICAL DEVICES LABELED "L" INDICATES DEVICE CONNECTED TO ROOM LIGHTING CIRCUIT.
12–ELECTRICAL DEVICES LABELED "R" INDICATES DEVICE CONNECTED TO ROOM RECEPTACLES–CIRCUIT.
13–PROVIDE SOUNDER BASE SMOKE DETECTOR AT EACH SIDE OF GUESTROOM DOOR AT UNITS NUMBER: A101, A109, A123, A208,A217, A236, A308, A317 AND A336. CONNECT TO EXISTING NOTIFICATION APPLIANCES FIRE ALARM CIRCUIT.
14–PROVIDE COMBINATION SMOKE DETECTOR/STROBE FOR ALL HOTEL GUESTROOM SMOKE DETECTORS.
15–GUESTROOM'S STROBE TO BE ACTIVATED BY SYSTEM FIRE ALARM AND BY ROOM SMOKE ALARM.

GUESTROOM FIRE ALARM KEYNOTES

1. PROVIDE BATTERY BACK–UP 120 VOLT SMOKE DETECTORS AT EACH GUESTROOM AND CONNECT ALL DETECTORS WITHIN EACH UNIT SO THAT ALARM FROM ANY DETECTOR SOUNDS THE ALARM AT ALL DETECTORS WITHIN THE SUITE. MOUNT ON WALL @ A MINIMUM OF 4" FROM THE CEILING (TO THE TOP OF THE DETECTOR) AND MAXIMUM OF 12" FROM THE CELING. (TO THE BOTTOM OF THE DETECTOR)
2. GUESTROOM FIRE ALARM HORN TIED TO MAIN BUILDING FIRE ALARM SYSTEM. COORDINATE EXACT LOCATION WITH INTERIOR DESIGNER ELEVATIONS. LOCATION MUST MEET NFPA DB REQUIREMENTS.
3. PROVIDE PUSH BUTTON OUTSIDE THE DOOR FOR HEARING IMPAIRED ROOMS. CONNECT TO STROBE(S) INSIDE THE ROOM.
4. SMOKE DETECTOR IN ACCESSIBLE AND HEARING IMPAIRED ROOMS ONLY. TO ACTIVATE LOCAL AREA 177 CD STROBE LIGHT (TYPICAL).
5. PROVIDE FLASHING STROBE LIGHT AT 110 CANDELLA. MOUNT 24" FROM CEILING IN ACCESSIBLE AND HEARING IMPAIRED ROOMS ONLY. TIE TO CENTRAL SYSTEM. VISUAL ALARMS IN ADA COMPLIANT ROOMS MUST BE ACTIVATED BY BOTH: STAND ALONE 120 VOLTS INITIATION DEVICE IN ROOM AND BY BUILDING FIRE ALARM SYSTEM.
6. PROVIDE FLASHING STROBE LIGHT AT 75 CANDELLA IN BATHROOM IN ACCESSIBLE AND HEARING IMPAIRED ROOMS ONLY. TIE TO CENTRAL SYSTEM. VISUAL ALARMS IN ADA COMPLIANT ROOMS MUST BE ACTIVATED BY BOTH: STAND ALONE 120 VOLTS INITIATION DEVICE IN ROOM AND BY BUILDING FIRE ALARM SYSTEM.

LABELS LEGEND:
E–EXISTING.
N–NEW.
R–REPLACED.

ENLARGED UNITS @ SECOND & THIRD FLOOR ELECTRICAL PLAN

SCALE: 1/4"=1'–0"

KEY PLAN nts

HADDON HALL
1500 COLLINS AVE

MIAMI BEACH, FL

KEYPLAN N.T.S.

REVISIONS

NO.	DESCRIPTION	ISSUE DATE
1	100% CD COORD. REVISION	2–18–14
2	PERMIT REVIEW COMMENTS	3–14–14
4	FIRE REVIEW COMMENTS	4–7–14
12	FIRE DPMT. PERMIT COMM.	8–21–14

MTCI PRIVATE PROVIDER SERVICES, LLC
Construction Plans Review, Inspections, Testing & Engineering

	REVIEWER INITIALS	DATE REVIEWED
BUILDING		
STRUCTURAL		
MECHANICAL		
ELECTRICAL	TDC	11-10-14
PLUMBING		
SITE CIVIL		

100% CONSTRUCTION DOCUMENT SET

NORTH SEAL

Jonathan Cardello
Lic. # AR93391

ADD Inc Architecture Interiors Planning

One Biscayne Tower
Suite 1670
Two South
Biscayne Boulevard
Miami, Fl 33131
T. 305.482.8700
F. 305.482.8770
www.addinc.com
Lic. # AA26001507

Boston Miami

JOB NUMBER: 13036.00
CHECKED BY:
ISSUE DATE: MARCH 14, 2014
SCALE: AS NOTED

SHEET TITLE

ENLARGED UNITS
THIRD FLOOR
ELECTRICAL PLAN

STEVEN M. FELLER LICENSE No 22046 STATE OF FLORIDA PROFESSIONAL ENGINEER
SEP 04 2014
APPROVED MIAMI BEACH FIRE DEPARTMENT

STEVEN FELLER P.E., PE
FLORIDA P.E. Reg. # 22046
Certificate of Authorization # 000034427
500 N.E. THIRD AVENUE
FORT LAUDERDALE, FLORIDA 33301
PH: 954.467.1402 FAX: 954.467.5752
e-mail: fellerpe@fellerpe.com
JOB # 13153

SHEET NUMBER

E2.05

COPYRIGHT ADD INC 2011

PLAN NOTES:

1–REFER TO ALL LEVELS 1/8" SCALE FLOOR PLAN DRAWINGS FOR HVAC EQUIPMENT SERVING EACH GUESTROOM UNIT AND CORRESPONDENT CIRCUIT.
2–ALL RECEPTACLES AND SWITCHES SHOWN ARE EXISTING TO REMAIN, (LABELED 'E'). DEVICES LABELED 'N' TO DENOTE NEW DEVICE. DEVICES LABELED 'R' TO DENOTE EXISTING FIXTURE REPLACED BY NEW MODEL WITH LESS WATTAGE. SEE LIGHTING FIXTURES SCHEDULE.
2 3–CONNECT ALL NEW RECEPTACLES AND SWITCHES TO EXISTING ROOM RECEPTACLE'S CIRCUIT.
4–ALL RECEPTACLES IN HOTEL GUESTROOMS TO BE TAMPER RESISTANT.
5–CONTRACTOR TO VERIFY ACTUAL LOADING IN EACH CIRCUIT COMPLIES WITH MAXIMUM PERMITED BY CURRENT NEC CODE.
6–ADA COMPLIANCE DEVICES SHOWN ONLY FOR ADA/HEARING IMPAIRED TYPE UNITS.
7–REFER TO HVAC DRAWINGS FOR EXACT LOCATION OF ALL HVAC UNITS.
8–CONNECT SMOKE DETECTORS IN GUESTROOMS TO ROOM LIGHTING CIRCUIT. BY–PASS ALL LIGHTING CONTROL TO FEED THIS DEVICE.
9–REFER TO ID DRAWINGS FOR EXACT MOUNTING HEIGHT AND LOCATION OF ALL RECEPTACLES AND WALL MOUNTED LIGHT FIXTURES.
1 10–POOL SUITES ELECTRICAL DEVICES LABELED "L" INDICATES DEVICE CONNECTED TO ROOM LIGHTING CIRCUIT.
11–POOL SUITES ELECTRICAL DEVICES LABELED "R" INDICATES DEVICE CONNECTED TO ROOM RECEPTACLES CIRCUIT.
12–ALL INSTALLATION IN THE POOL SUITES BUILDING IS NEW.
12 13–PROVIDE COMBINATION SMOKE DETECTOR/STROBE FOR ALL HOTEL GUESTROOM SMOKE DETECTORS)
14–GUESTROOM'S STROBE TO BE ACTIVATED BY SYSTEM FIRE ALARM AND BY ROOM SMOKE ALARM.

GUESTROOM FIRE ALARM KEYNOTES

1. PROVIDE BATTERY BACK–UP 120 VOLT SMOKE DETECTORS AT EACH GUESTROOM AND CONNECT ALL DETECTORS WITHIN EACH UNIT SO THAT ALARM FROM ANY DETECTOR SOUNDS THE ALARM AT ALL DETECTORS WITHIN THE SUITE. MOUNT ON WALL @ A MINIMUM OF 4" FROM THE CEILING (TO THE TOP OF THE DETECTOR) AND MAXIMUM OF 12" FROM THE CELING. (TO THE BOTTOM OF THE DETECTOR)
2. GUESTROOM FIRE ALARM HORN TIED TO MAIN BUILDING FIRE ALARM SYSTEM. COORDINATE EXACT LOCATION WITH INTERIOR DESIGNER ELEVATIONS. LOCATION MUST MEET NFPA 8B REQUIREMENTS.
3. PROVIDE PUSH BUTTON OUTSIDE THE DOOR FOR HEARING IMPAIRED ROOMS. CONNECT TO STROBE(S) INSIDE THE ROOM.
4. SMOKE DETECTOR IN ACCESSIBLE AND HEARING IMPAIRED ROOMS ONLY. TO ACTIVATE LOCAL AREA 177 CD STROBE LIGHT (TYPICAL).
5. PROVDE FLASHING STROBE LIGHT AT 110 CANDELLA. MOUNT 24" FROM CEILING IN ACCESSIBLE AND HEARING IMPAIRED ROOMS ONLY. TIE TO CENTRAL SYSTEM. VISUAL ALARMS IN ADA COMPLIANT ROOMS MUST BE ACTIVATED BY BOTH: STAND ALONE 120 VOLTS INITIATION DEVICE IN ROOM AND BY BUILDING FIRE ALARM SYSTEM.
6. PROVDE FLASHING STROBE LIGHT AT 75 CANDELLA IN BATHROOM IN ACCESSIBLE AND HEARING IMPAIRED ROOMS ONLY. TIE TO CENTRAL SYSTEM. VISUAL ALARMS IN ADA COMPLIANT ROOMS MUST BE ACTIVATED BY BOTH: STAND ALONE 120 VOLTS INITIATION DEVICE IN ROOM AND BY BUILDING FIRE ALARM SYSTEM.

LABELS LEGEND:
E–EXISTING.
N–NEW.
R–REPLACED.
1

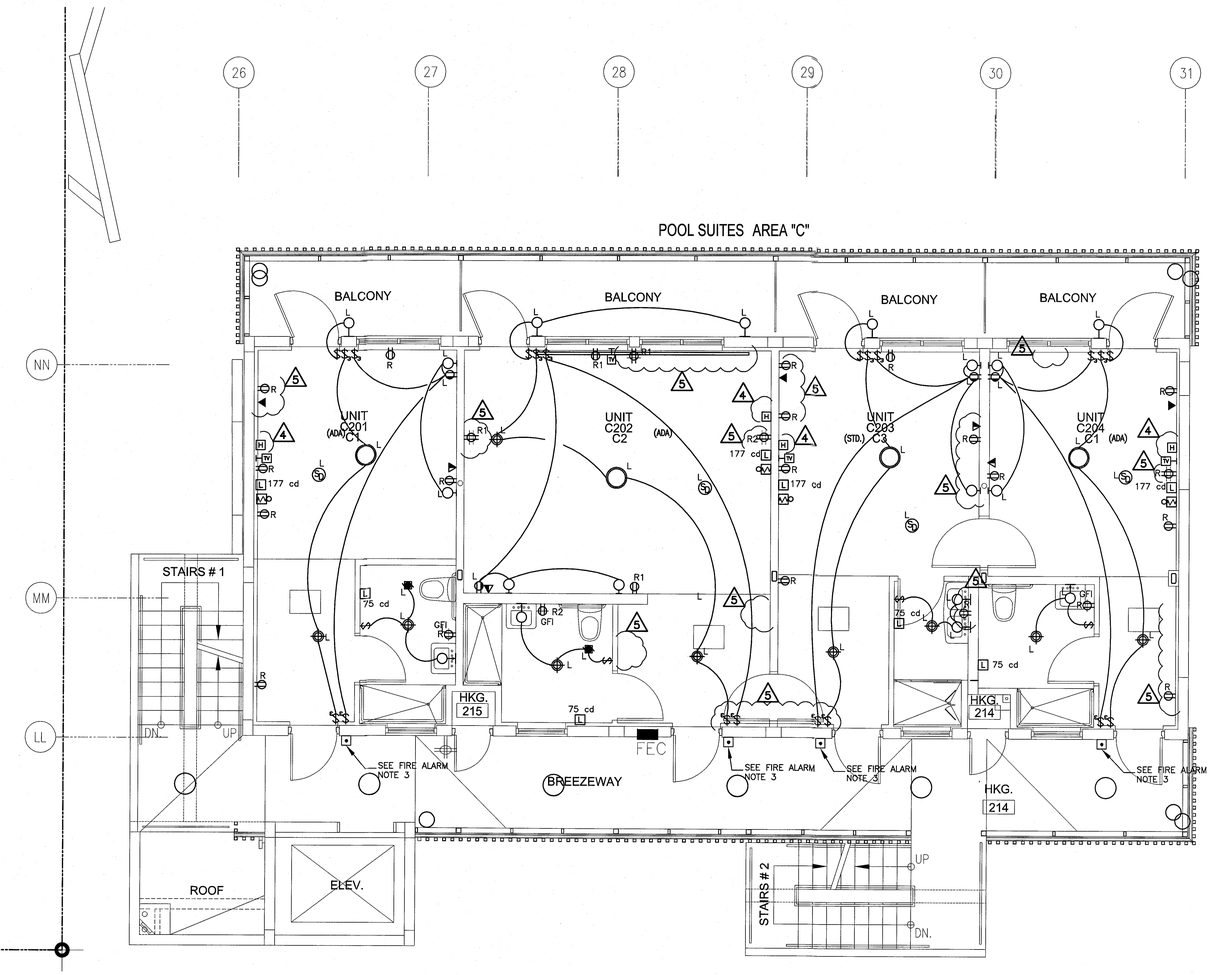

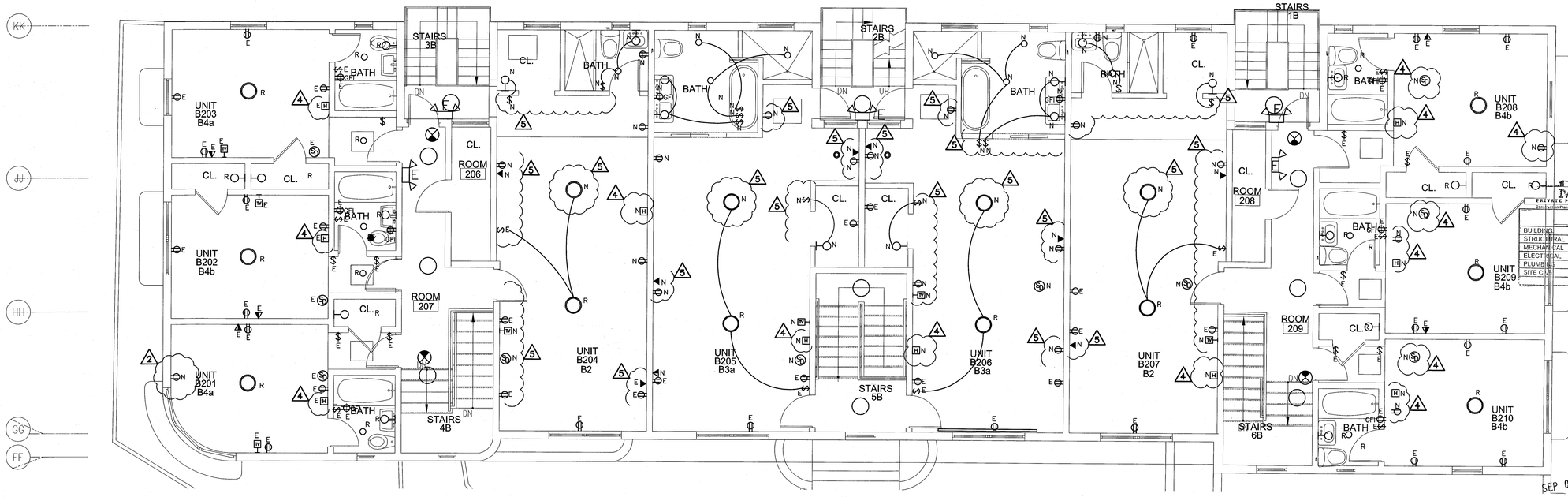

2ND FLOOR ENLARGED UNITS ELECTRICAL PLAN

SCALE: 1/4"=1'–0"

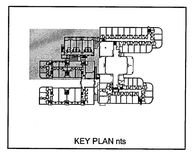
KEY PLAN nts

STEVEN FELLER P.E.,PL
FLORIDA P.E. Reg. # 22046
Certificate of Authorization # 00003427
500 N.E. THIRD AVENUE
FORT LAUDERDALE, FLORIDA 33301
PH: 954.467.1402 FAX: 954.467.5752
e-mail: fellerpe@fellerpe.com
JOB # 13153

SEP 04 2014

STEVEN M FELLER LICENSE NO. 22046 STATE OF FLORIDA PROFESSIONAL ENGINEER

APPROVED MIAMI BEACH FIRE DEPARTMENT

HADDON HALL
1500 COLLINS AVE
MIAMI BEACH, FL

KEYPLAN N.T.S.

REVISIONS

NO.	DESCRIPTION	ISSUE DATE
1	100% CD COORD. REVISION	2–18–14
2	PERMIT REVIEW COMMENTS	3–14–14
4	FIRE REVIEW COMMENTS	4–7–14
5	GUESTROOM COORDINATION	3–14–14
12	FIRE DPMT. PERMIT COMM.	8–21–14

100% CONSTRUCTION DOCUMENT SET

NORTH SEAL

Jonathan Cardello
Lic. # AR93391

ADD Inc Architecture Interiors Planning

One Biscayne Tower
Suite 1670
Two South
Biscayne Boulevard
Miami, Fl 33131
T. 305.482.8700
F. 305.482.8770
www.addinc.com
Lic. # AA26001507

Boston Miami

MTCI PRIVATE PROVIDER SERVICES, LLC
Construction Plans Review, Inspections, Testing & Consulting

	REVIEWER INITIALS	DATE REVIEWED
BUILDING		
STRUCTURAL		
MECHANICAL		
ELECTRICAL	TDC	11-10-14
PLUMBING		
SITE CIVIL		

JOB NUMBER: 13036.00
CHECKED BY:
ISSUE DATE: MARCH 14, 2014
SCALE: AS NOTED

SHEET TITLE

ENLARGED UNITS ELECTRICAL PLAN

SHEET NUMBER

E2.06

COPYRIGHT ADD INC 2011

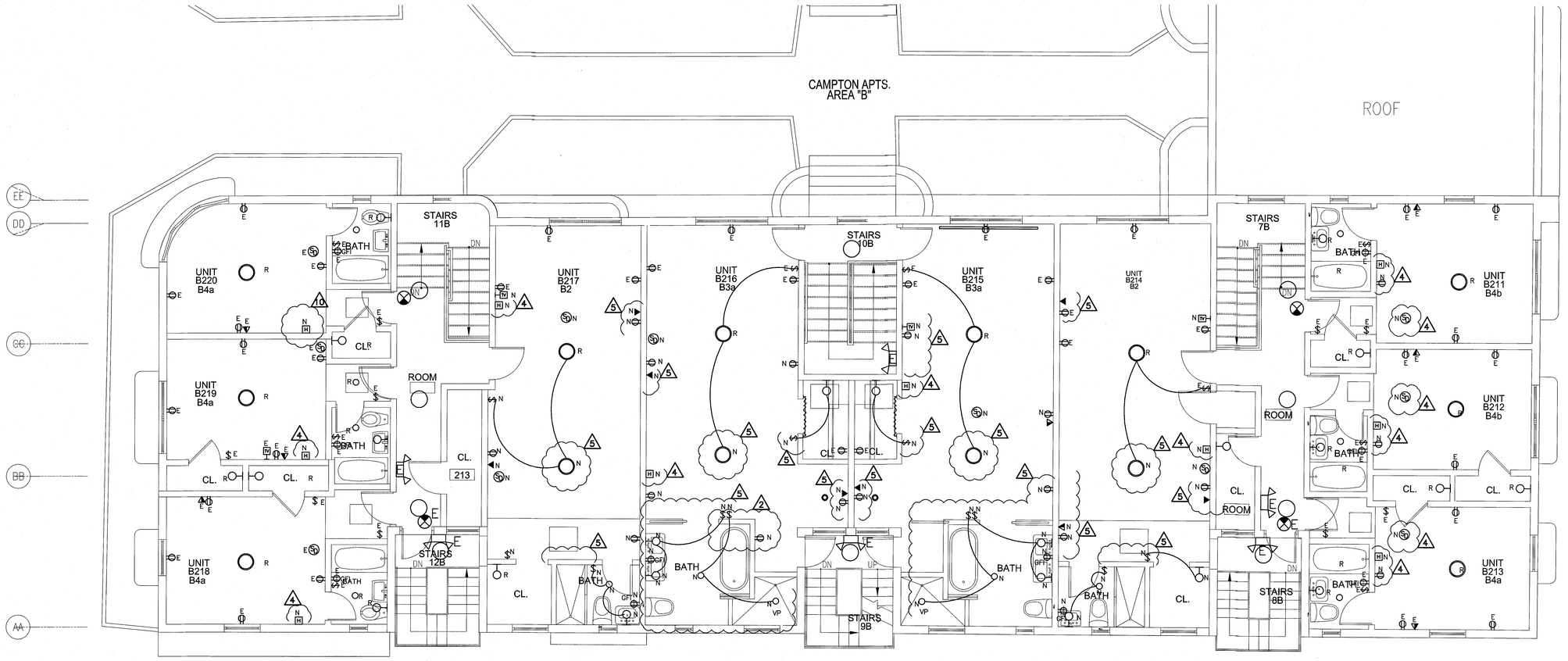

GUESTROOM FIRE ALARM KEYNOTES

1. PROVIDE BATTERY BACK-UP 120 VOLT SMOKE DETECTORS AT EACH GUESTROOM AND CONNECT ALL DETECTORS WITHIN EACH UNIT SO THAT ALARM FROM ANY DETECTOR SOUNDS THE ALARM AT ALL DETECTORS WITHIN THE SUITE. MOUNT ON WALL @ A MINIMUM OF 4" FROM THE CEILING (TO THE TOP OF THE DETECTOR) AND MAXIMUM OF 12" FROM THE CEILING. (TO THE BOTTOM OF THE DETECTOR)
2. GUESTROOM FIRE ALARM HORN TIED TO MAIN BUILDING FIRE ALARM SYSTEM. COORDINATE EXACT LOCATION WITH INTERIOR DESIGNER ELEVATIONS. LOCATION MUST MEET NFPA DB REQUIREMENTS.
3. PROVIDE PUSH BUTTON OUTSIDE THE DOOR FOR HEARING IMPAIRED ROOMS. CONNECT TO STROBE(S) INSIDE THE ROOM.
4. SMOKE DETECTOR IN ACCESSIBLE AND HEARING IMPAIRED ROOMS ONLY, TO ACTIVATE LOCAL AREA 177 CD STROBE LIGHT (TYPICAL).
5. PROVIDE FLASHING STROBE LIGHT AT 110 CANDELLA. MOUNT 24" FROM CEILING IN ACCESSIBLE AND HEARING IMPAIRED ROOMS ONLY. TIE TO CENTRAL SYSTEM. VISUAL ALARMS IN ADA COMPLIANT ROOMS MUST BE ACTIVATED BY BOTH: STAND ALONE 120 VOLTS INITIATION DEVICE IN ROOM AND BY BUILDING FIRE ALARM SYSTEM.
6. PROVIDE FLASHING STROBE LIGHT AT 75 CANDELLA IN BATHROOM IN ACCESSIBLE AND HEARING IMPAIRED ROOMS ONLY. TIE TO CENTRAL SYSTEM. VISUAL ALARMS IN ADA COMPLIANT ROOMS MUST BE ACTIVATED BY BOTH: STAND ALONE 120 VOLTS INITIATION DEVICE IN ROOM AND BY BUILDING FIRE ALARM SYSTEM.

PLAN NOTES:

1-REFER TO ALL LEVELS 1/8" SCALE FLOOR PLAN DRAWINGS FOR HVAC EQUIPMENT SERVING EACH GUESTROOM UNIT AND CORRESPONDENT CIRCUIT.
2-ALL RECEPTACLES AND SWITCHES SHOWN ARE EXISTING TO REMAIN, (LABELED 'E'). DEVICES LABELED 'N' TO DENOTE NEW DEVICE. DEVICES LABELED 'R' TO DENOTE EXISTING FIXTURE REPLACED BY NEW MODEL WITH LESS WATTAGE. SEE LIGHTING FIXTURES SCHEDULE.
3-CONNECT ALL NEW RECEPTACLES AND SWITCHES TO EXISTING ROOM RECEPTACLE'S CIRCUIT.
4-ALL RECEPTACLES IN HOTEL GUESTROOMS TO BE TAMPER RESISTANT.
5-CONTRACTOR TO VERIFY ACTUAL LOADING IN EACH CIRCUIT COMPLIES WITH MAXIMUM PERMITED BY CURRENT NEC CODE.
6-ADA COMPLIANCE DEVICES SHOWN ONLY FOR ADA/HEARING IMPAIRED TYPE UNITS.
7-REFER TO HVAC DRAWINGS FOR EXACT LOCATION OF ALL HVAC UNITS.
8-CONNECT SMOKE DETECTORS IN GUESTROOMS TO ROOM LIGHTING CIRCUIT. BY-PASS ALL LIGHTING CONTROL TO FEED THIS DEVICE.
9-REFER TO ID DRAWINGS FOR EXACT MOUNTING HEIGHT AND LOCATION OF ALL RECEPTACLES AND WALL MOUNTED LIGHT FIXTURES.
10-PROVIDE COMBINATION SMOKE DETECTOR/STROBE FOR ALL HOTEL GUESTROOM SMOKE DETECTORS.)
11-GUESTROOM'S STROBE TO BE ACTIVATED BY SYSTEM FIRE ALARM AND BY ROOM SMOKE ALARM.

LABELS LEGEND:

E-EXISTING.
N-NEW.
R-REPLACED.

	REVIEWER INITIALS	DATE REVIEWED
BUILDING		
STRUCTURAL		
MECHANICAL		
ELECTRICAL	TDC	11-10-14
PLUMBING		
SITE CIVIL		

MTCI PRIVATE PROVIDER SERVICES, LLC
Construction Plans Review, Inspections, Testing & Certification

2ND FLOOR ENLARGED UNITS ELECTRICAL PLAN

SCALE: 1/4"=1'-0"

KEY PLAN nts

SEP 04 2014

STEVEN M. FELLER LICENSE No. 22046 STATE OF FLORIDA PROFESSIONAL ENGINEER

APPROVED MIAMI BEACH FIRE DEPARTMENT

STEVEN FELLER P.E.,PL
FLORIDA P.E. Reg. # 22046
Certificate of Authorization # 00003427
500 N.E. THIRD AVENUE
FORT LAUDERDALE, FLORIDA 33301
PH: 954.467.1402 FAX: 954.467.5752
e-mail: fellerpe@fellerpe.com
JOB # 13153

HADDON HALL
1500 COLLINS AVE
MIAMI BEACH, FL

KEYPLAN N.T.S.

REVISIONS

NO.	DESCRIPTION	ISSUE DATE
1	100% CD COORD. REVISION	2-18-14
2	PERMIT REVIEW COMMENTS	3-14-14
4	FIRE REVIEW COMMENTS	4-7-14
5	GUESTROOM COORDINATION	3-14-14
10	MASTER PERMIT COMMENTS	7-3-14
12	FIRE DPMT. PERMIT COMM.	8-21-14

100% CONSTRUCTION DOCUMENT SET

NORTH SEAL

Jonathan Cardello
Lic. # AR93391

ADD Inc Architecture Interiors Planning

One Biscayne Tower
Suite 1670
Two South
Biscayne Boulevard
Miami, Fl 33131
T. 305.482.8700
F. 305.482.8770
www.addinc.com
Lic. # AA26001507

Boston Miami

JOB NUMBER: 13036.00
CHECKED BY:
ISSUE DATE: MARCH 14, 2014
SCALE: AS NOTED

SHEET TITLE

ENLARGED UNITS ELECTRICAL PLAN

SHEET NUMBER

E2.07

COPYRIGHT ADD INC 2011

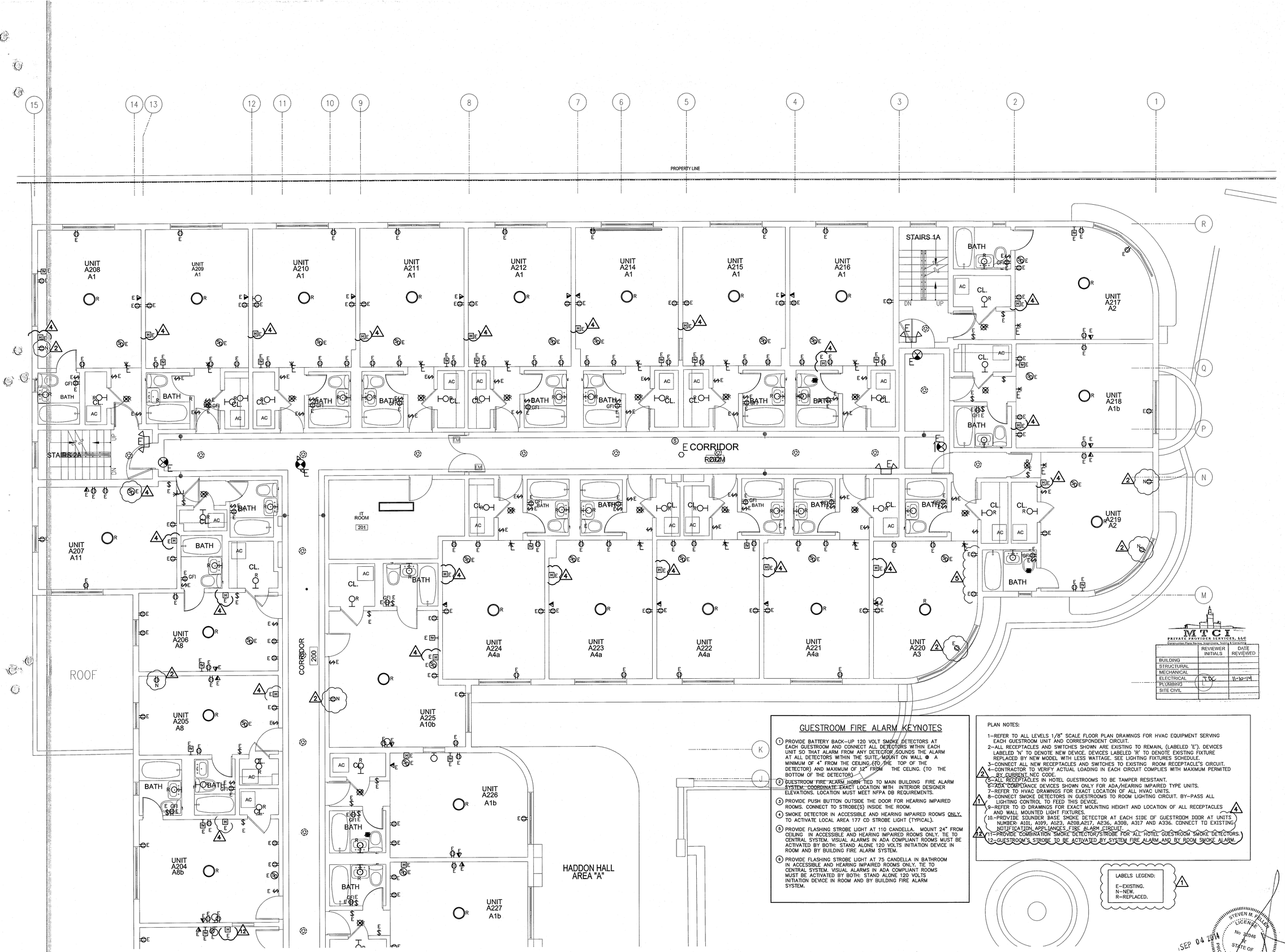

GUESTROOM FIRE ALARM KEYNOTES

1. PROVIDE BATTERY BACK-UP 120 VOLT SMOKE DETECTORS AT EACH GUESTROOM AND CONNECT ALL DETECTORS WITHIN EACH UNIT SO THAT ALARM FROM ANY DETECTOR SOUNDS THE ALARM AT ALL DETECTORS WITHIN THE SUITE. MOUNT ON WALL ⊕ A MINIMUM OF 4" FROM THE CEILING (TO THE TOP OF THE DETECTOR) AND MAXIMUM OF 12" FROM THE CEILING. (TO THE BOTTOM OF THE DETECTOR)
2. GUESTROOM FIRE ALARM HORN TIED TO MAIN BUILDING FIRE ALARM SYSTEM. COORDINATE EXACT LOCATION WITH INTERIOR DESIGNER ELEVATIONS. LOCATION MUST MEET NFPA 72 REQUIREMENTS.
3. PROVIDE PUSH BUTTON OUTSIDE THE DOOR FOR HEARING IMPAIRED ROOMS. CONNECT TO STROBE(S) INSIDE THE ROOM.
4. SMOKE DETECTOR IN ACCESSIBLE AND HEARING IMPAIRED ROOMS ONLY. TO ACTIVATE LOCAL AREA 177 CD STROBE LIGHT (TYPICAL).
5. PROVIDE FLASHING STROBE LIGHT AT 110 CANDELLA. MOUNT 24" FROM CEILING IN ACCESSIBLE AND HEARING IMPAIRED ROOMS ONLY. TIE TO CENTRAL SYSTEM. VISUAL ALARMS IN ADA COMPLIANT ROOMS MUST BE ACTIVATED BY BOTH: STAND ALONE 120 VOLTS INITIATION DEVICE IN ROOM AND BY BUILDING FIRE ALARM SYSTEM.
6. PROVIDE FLASHING STROBE LIGHT AT 75 CANDELLA IN BATHROOM IN ACCESSIBLE AND HEARING IMPAIRED ROOMS ONLY. TIE TO CENTRAL SYSTEM. VISUAL ALARMS IN ADA COMPLIANT ROOMS MUST BE ACTIVATED BY BOTH: STAND ALONE 120 VOLTS INITIATION DEVICE IN ROOM AND BY BUILDING FIRE ALARM SYSTEM.

PLAN NOTES:

1–REFER TO ALL LEVELS 1/8" SCALE FLOOR PLAN DRAWINGS FOR HVAC EQUIPMENT SERVING EACH GUESTROOM UNIT AND CORRESPONDENT CIRCUIT.
2–ALL RECEPTACLES AND SWITCHES SHOWN ARE EXISTING TO REMAIN, (LABELED 'E'). DEVICES LABELED 'N' TO DENOTE NEW DEVICE. DEVICES LABELED 'R' TO DENOTE EXISTING FIXTURE REPLACED BY NEW MODEL WITH LESS WATTAGE. SEE LIGHTING FIXTURES SCHEDULE.
3–CONNECT ALL NEW RECEPTACLES AND SWITCHES TO EXISTING ROOM RECEPTACLE'S CIRCUIT.
4–CONTRACTOR TO VERIFY ACTUAL LOADING IN EACH CIRCUIT COMPLIES WITH MAXIMUM PERMITED BY CURRENT NEC CODE.
5–ALL RECEPTACLES IN HOTEL GUESTROOMS TO BE TAMPER RESISTANT.
6–ADA COMPLIANCE DEVICES SHOWN ONLY FOR ADA/HEARING IMPAIRED TYPE UNITS.
7–REFER TO HVAC DRAWINGS FOR EXACT LOCATION OF ALL HVAC UNITS.
8–CONNECT SMOKE DETECTORS IN GUESTROOMS TO ROOM LIGHTING CIRCUIT. BY–PASS ALL LIGHTING CONTROL TO FEED THIS DEVICE.
9–REFER TO ID DRAWINGS FOR EXACT MOUNTING HEIGHT AND LOCATION OF ALL RECEPTACLES AND WALL MOUNTED LIGHT FIXTURES.
10.–PROVIDE SOUNDER BASE SMOKE DETECTOR AT EACH SIDE OF GUESTROOM DOOR AT UNITS NUMBER: A101, A109, A123, A208,A217, A236, A308, A317 AND A336. CONNECT TO EXISTING NOTIFICATION APPLIANCES FIRE ALARM CIRCUIT.
11–PROVIDE COMBINATION SMOKE DETECTOR/STROBE FOR ALL HOTEL GUESTROOM SMOKE DETECTORS.
12–GUESTROOM'S STROBE TO BE ACTIVATED BY SYSTEM FIRE ALARM AND BY ROOM SMOKE ALARM.

LABELS LEGEND:

E–EXISTING.
N–NEW.
R–REPLACED.

KEY PLAN nts

TYPICAL ENLARGED UNITS ELECTRICAL PLAN

SCALE: 1/4"=1'–0"

HADDON HALL
1500 COLLINS AVE

MIAMI BEACH, FL

KEYPLAN N.T.S.

REVISIONS

NO.	DESCRIPTION	ISSUE DATE
1	100% CD COORD. REVISION	2–18–14
2	PERMIT REVIEW COMMENTS	3–14–14
4	FIRE REVIEW COMMENTS	4–7–14
12	FIRE DPMT. PERMIT COMM.	8–21–14

MTCE
PRIVATE PROVIDER SERVICES, LLC
Construction Plans Review, Inspections, Testing & Consulting

	REVIEWER INITIALS	DATE REVIEWED
BUILDING		
STRUCTURAL		
MECHANICAL		
ELECTRICAL	LDC	11-10-14
PLUMBING		
SITE CIVIL		

100% CONSTRUCTION DOCUMENT SET

NORTH SEAL

Jonathan Cardello
Lic. # AR93391

ADD Inc Architecture Interiors Planning

One Biscayne Tower
Suite 1670
Two South
Biscayne Boulevard
Miami, Fl 33131
T. 305.482.8700
F. 305.482.8770
www.addinc.com
Lic. # AA26001507

Boston Miami

JOB NUMBER: 13036.00
CHECKED BY:
ISSUE DATE: MARCH 14, 2014
SCALE: AS NOTED

SHEET TITLE

ENLARGED UNITS ELECTRICAL PLAN

SEP 04 2014
STEVEN M. FELLER LICENSE No 22046 STATE OF FLORIDA PROFESSIONAL ENGINEER
APPROVED MIAMI BEACH FIRE DEPARTMENT

STEVEN FELLER P.E.,PL
FLORIDA P.E. Reg. # 22046
Certificate of Authorization # 00003427
500 N.E. THIRD AVENUE
FORT LAUDERDALE, FLORIDA 33301
PH: 954.467.1402 FAX: 954.467.5752
e-mail: tellerpe@tellerpe.com
JOB # 13153

SHEET NUMBER

E2.08

COPYRIGHT ADD INC 2011

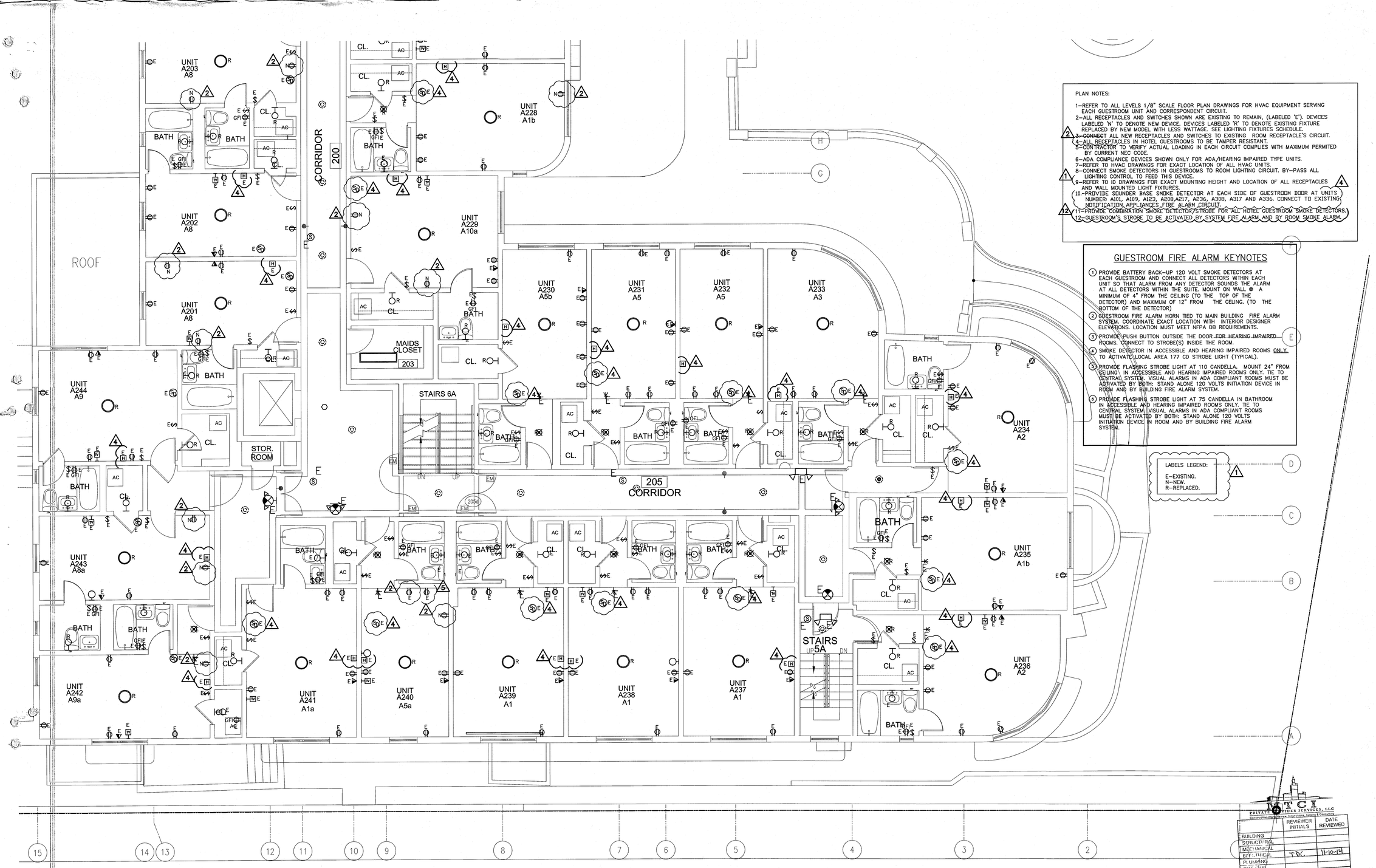

2ND FLOOR ENLARGED UNITS ELECTRICAL PLAN

SCALE: 1/4"=1'-0"

KEY PLAN nts

	REVIEWER INITIALS	DATE REVIEWED
BUILDING STRUCTURAL		
MECHANICAL	TDC	11-10-14
ELECTRICAL		
PLUMBING		
SITE/CIVIL		

SEP 04 2014

STEVEN M. FELLER LICENSE No. 22046 STATE OF FLORIDA PROFESSIONAL ENGINEER

APPROVED MIAMI BEACH FIRE DEPARTMENT

STEVEN FELLER P.E.,PL
FLORIDA P.E. Reg. # 22046
Certificate of Authorization # 00003427
500 N.E. THIRD AVENUE
FORT LAUDERDALE, FLORIDA 33301
PH: 954.467.1402 FAX: 954.467.5752
e-mail: fellerpe@fellerpe.com
JOB # 13153

HADDON HALL
1500 COLLINS AVE

MIAMI BEACH, FL

KEYPLAN N.T.S.

REVISIONS

NO.	DESCRIPTION	ISSUE DATE
1	100% CD COORD. REVISION	2-18-14
2	PERMIT REVIEW COMMENTS	3-14-14
4	FIRE REVIEW COMMENTS	4-7-14
5	GUESTROOM COORDINATION	3-14-14
12	FIRE DPMT. PERMIT COMM.	8-21-14

100% CONSTRUCTION DOCUMENT SET

NORTH SEAL

Jonathan Cardello
Lic. # AR93391

ADD Inc Architecture Interiors Planning

One Biscayne Tower
Suite 1670
Two South
Biscayne Boulevard
Miami, Fl 33131
T. 305.482.8700
F. 305.482.8770
www.addinc.com
Lic. # AA26001507

Boston Miami

JOB NUMBER: 13036.00

CHECKED BY:

ISSUE DATE: MARCH 14, 2014

SCALE: AS NOTED

SHEET TITLE

ENLARGED UNITS ELECTRICAL PLAN

SHEET NUMBER

E2.09

COPYRIGHT ADD INC 2011

C1H-28

KEY	ITEM	DESCRIPTION	Volt/ Ph	HP/ KW	Amp/ Conn	Height
E 1		CONVENIENCE OUTLETS Two (2) rough-in locations required. *Circuit size indicated.	120 1		20* 2DR	18" AFF
E 2		CONVENIENCE OUTLETS Two (2) rough-in locations required. *Circuit size indicated.	120 1		20* 2DR	18" AFF
E 3		SPARE NUMBER				
E 4		SPARE NUMBER				
E 5		CONVENIENCE OUTLETS Two (2) rough-in locations required. *Circuit size indicated.	120 1		20* 2DR	18" AFF
E 6		CONVENIENCE OUTLETS Two (2) rough-in locations required. *Circuit size indicated.	120 1		20* 2DR	48" AFF
E 7	6	ICE MAKER, CUBE-STYLE *Minimum 20.0 Amp circuit required.	120/208 1		*9.7 JB	108" AFF
E 8		CONVENIENCE OUTLET *Circuit size indicated.	120 1		20* DR	18" AFF
E 9	10	WALK-IN COOLER Ice Cooler doors & lights Electrician to hang, install and supply all required light bulbs. Fixtures by KEC. Electrician to run conduit on exterior (above) where possible & seal all penetrations accordingly.	115 1		5.0 JB	108" AFF
E 10	10.1	EVAPORATOR COIL Refer to sheets FS R1 & FS R2 for further detail s and specifications.	115 1		1.9 JB	102" AFF
E 11	11	WALK-IN FREEZER For Cooler doors & lights Electrician to hang, install and supply all required light bulbs. Fixtures by KEC. Electrician to run conduit on exterior (above) where possible & seal all penetrations accordingly.	115 1		5.0 JB	102" AFF
E 12	11.1	EVAPORATOR COIL Refer to sheets FS R1 & FS R3 for further detail s and specifications.	208 1		6.8 JB	102" AFF
E 13		SPARE NUMBER				
E 14		SPARE NUMBER				
E 15		CONVENIENCE OUTLETS Two (2) rough-in locations required. *Circuit size indicated.	120 1		20* 2DR	18" AFF
E 16	23	REMOTE REFRIGERATION RACK Single point connection at disconnect mounted on unit Refer to sheets FS-R1 & R2 for further detail s and specifications. Verify exact location in field. *30 amp fuse size required.	208 3	3.25	24.2* JB	
E 17		CONVENIENCE OUTLETS Three (3) rough-in locations required. *Circuit size indicated.	120 1		20* 2DR	18" AFF
E 18	20	EVAPORATOR COIL Refer to sheets FS R3 & FS R4 for further detail s and specifications.	208 1		2.7 JB	102" AFF
E 19	20.1	REMOTE CONDENSING UNIT Single point connection at disconnect mounted on unit. Refer to sheet FS R3 & R4 for further detail s and specifications. Verify exact location in field. *30 amp fuse size required.	208 3	5.0	19.9* JB	48" AFF
E 100	129.1	FIRE SUPPRESSION SYSTEM Provide an separate dedicated circuit. Interconnect to building's fire safety system as required. *Circuit size indicated. Electrician to provide and interconnect Shunt Trip Breakers for the shut down all Electric fuel sources under the Exhaust Hoods. The Electrician shall Interconnect with exhaust/supply fans per local code requirements for proper shut down/stay on insurance carrier's set condition. For coverage of items under Hood #129. Electrician to provide empty junction box w/ conduit to finish ceiling as indicated on Food Service Electric plans for Fire pull. Fire System installer will coordinate and verify the exact location of the pull station as required by local Code	120 1		20* JB	103" AFF
E 101		CONVENIENCE OUTLET *Circuit size indicated.	120 1		20* DR	18" AFF
E 102		CONVENIENCE OUTLET *Link w/ E101.	120 1		* DR	18" AFF
E 103		SPARE NUMBER				
E 104		SPARE NUMBER				
E 105	109	BOOSTER HEATER, ELECTRIC 125 amp fuse size required.	208 3	34.0	160.0 JB	24" AFF
E 106	110	DISHWASHER, CONVEYOR TYPE Electrician to wire table limit switch at end of Clean Dish Table (BTC from Controls). Wash Pump Motor - 2 HP, 6.5 amps Conveyor Motor - 1/4 -HP, 1.1 amps Tank Heat - 10 KW, 27.8 amps	208 3	2-1/4 10.0	35.4 JB	78" AFF
E 107	111.1	GARBAGE DISPOSER Electrician to BTC to manual reverse switch.	208 3	2.0	3.3 JB	24" AFF
E 108	112	DISHWASHER, UNDERCOUNTER Electrician to BTC @ controls from wall as shown. Wash Tank Heat - 4.0KW Booster Heater - 4.5KW Wash Pump - 2/4HP	208 3	3/4 6.5	32.1 JB	12" AFF
E 109		CONVENIENCE OUTLET *Link w/ E101.	120 1		* DR	48" AFF
E 110		CONVENIENCE OUTLET *Circuit size indicated.	120 1		20* DR	48" AFF
E 111	125	REFRIGERATOR, ROLL-IN NEMA 5-15P	115 1	1/3	10.6 SR	92" AFF
E 112		CONVENIENCE OUTLET *Circuit size indicated.	120 1		20* DR	18" AFF
E 113		SPARE NUMBER				
E 114		SPARE NUMBER				
E 115	126	CHEF UNIT Electrician to stub up from floor & BTC at UL fired sub panel in equipment. Provide a separated COM conduit for POS printers data line	120/208 3		*7.5.0 JB	6" AFF

Sub Panel Schedule:

[2] Cold rails
120v/1ph/20.0amp
[2] UC Refr. base 2 sec.
120v/1ph/20.0amp
[1] Heated Plate Cold inset
208v/3ph/25.0amp
[3] Printers
120v/1ph/15.0amps
[3] Convenience Outlets
120v/1ph/20.0amps

Total Amperage: 100.0a/1ph

Verify final electrical requirements with (KEC) fabricators shop drawings

E 116	131	FOOD WARMER, DROP-IN, ELECTRIC NEMA 6-15P	208 1		6.0 SR	24" AFF
E 117	136	REFRIGERATED COUNTER, GRIDDLE	115 1	1/3 1.24	8.4 SR	18" AFF
E 118		CONVENIENCE OUTLET *Circuit size indicated.	120 1		20* DR	24" AFF
E 119	140	COMBI OVEN Two (2) rough-in locations required @ 24" & 48" AFF. NEMA 5-15P	120 1		15.0 2SR	24" AFF
E 120	141	REFRIGERATOR FREEZER, REACH-IN NEMA 5-15P	115 1	1/2	10.3 SR	86" AFF
E 121		CONVENIENCE OUTLET *Link w/ E112.	120 1		* DR	18" AFF
E 122	139.5	HOOD CONTROL PANEL Electrician to BTC thru to Exhaust Hood, Item #129, for Hood Lights, make connections above Hood. Refer to Equipment Plan, sheet FS-M2 for further details and specifications. See mechanical plans for exact electrical requirements & fire and control specifications.	120 1		15.0 JB	48" AFF
E 123		SPARE NUMBER				
E 124		SPARE NUMBER				
E 125	145	REFRIGERATOR, REACH-IN DISPLAY NEMA 5-15P	115 1	1/3	7.3 SR	86" AFF
E 126	147	COFFEE BREWER Electrician to provide cord & plug.	120/208 1	6.1	30.0 SR	54" AFF
E 127	149	BACKBAR REFRIGERATOR *Dedicated 15.0 amp circuit required.	120 1	1/4	*6.5 SR	12" AFF
E 128	150	ESPRESSO MAKER Electrician to provide cord & plug.	220 1	2.4	13.0 SR	54" AFF
E 129		CONVENIENCE OUTLET *Circuit size indicated.	120 1		20* DR	48" AFF
E 130	157	ORANGE JUICER MACHINE	115 1	1/2 0.0	2.7 SR	54" AFF
E 131	158	BACKBAR REFRIGERATOR *Dedicated 15.0 amp circuit required.	120 1	1/4	*6.5 SR	12" AFF
E 132	163	POS - PRINTER (VERIFY) Owner provided item. *Circuit size indicated. Provide an separate circuit w/ isolated ground & COM conduit. POS wiring by others. Electrician to coordinate grommet location with Millwork Contractor.	120 1		20* SR	24" AFF
E 133		SPARE NUMBER				
E 134		SPARE NUMBER				
E 135		CONVENIENCE OUTLET Electrician to mount in back splash of equipment @ (mid). *Link w/ E129.	120 1		* DR	39" AFF
E 136	160	POS - CASH REGISTER (VERIFY) Owner provided item. *Circuit size indicated. Provide an separate circuit w/ isolated ground & COM conduit. POS wiring by others. Electrician to coordinate grommet location with Millwork Contractor.	120 1		20* DR	24" AFF
E 137	161	POS - PRINTER (VERIFY) Owner provided item. *Link w/ E136. Provide an separate circuit w/ isolated ground & COM conduit. POS wiring by others. Electrician to coordinate grommet location with Millwork Contractor.	120 1		* DR	24" AFF
E 138	159	DISPLAY CASE *Dedicated 15 amp circuit required	120 1	0.04	1.12 JB	12" AFF
E 139		SPARE NUMBER				
E 140		CONVENIENCE OUTLET Two (2) rough-in locations required. *Circuit size indicated. Electrician to BTC @ outlet mounted to bottom of equipment, towards top of die wall & BTC @ (& for) all lights as shown on plan.	120 1		20* JB	12" AFF
E 141	172	DISHWASHER, UNDERCOUNTER Wash Tank Heat - 4.0KW Booster Heater - 4.5KW Wash Pump - 3/4HP	208 3	3/4 8.5	32.1 JB	12" AFF
E 142	175	REFRIGERATED BACKBAR CABINET	115 1	1/3	9.6 SR	12" AFF
E 143		SPARE NUMBER				
E 144		SPARE NUMBER				
E 145	176	POS - CASH REGISTER (VERIFY) Owner provided item. *Circuit size indicated. Provide an separate circuit w/ isolated ground & COM conduit. POS wiring by others. Electrician to coordinate grommet location with Millwork Contractor	120 1		20* DR	24" AFF
E 146	177	POS - PRINTER (VERIFY) Owner provided item. *Link w/ E145. Provide an separate circuit w/ isolated ground & COM conduit. POS wiring by others. Electrician to coordinate grommet location with Millwork Contractor.	120 1		* DR	24" AFF
F 147	178	REFRIGERATED BACKBAR CABINET	115 1	1/3	9.6 SR	12" AFF

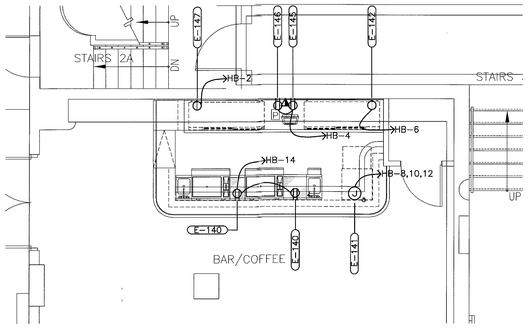

1ST FLOOR COFFEE BAR ELECTRICAL PLAN

SCALE: 1/4"=1'-0"

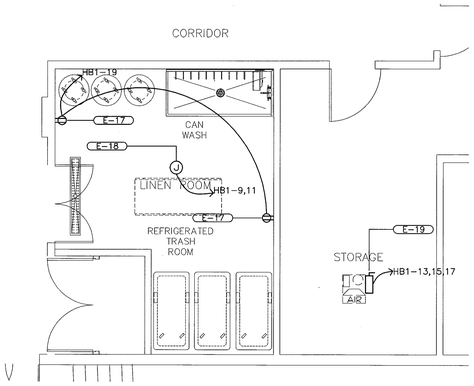

CELLAR ELECTRICAL PLAN

SCALE: 1/4"=1'-0"

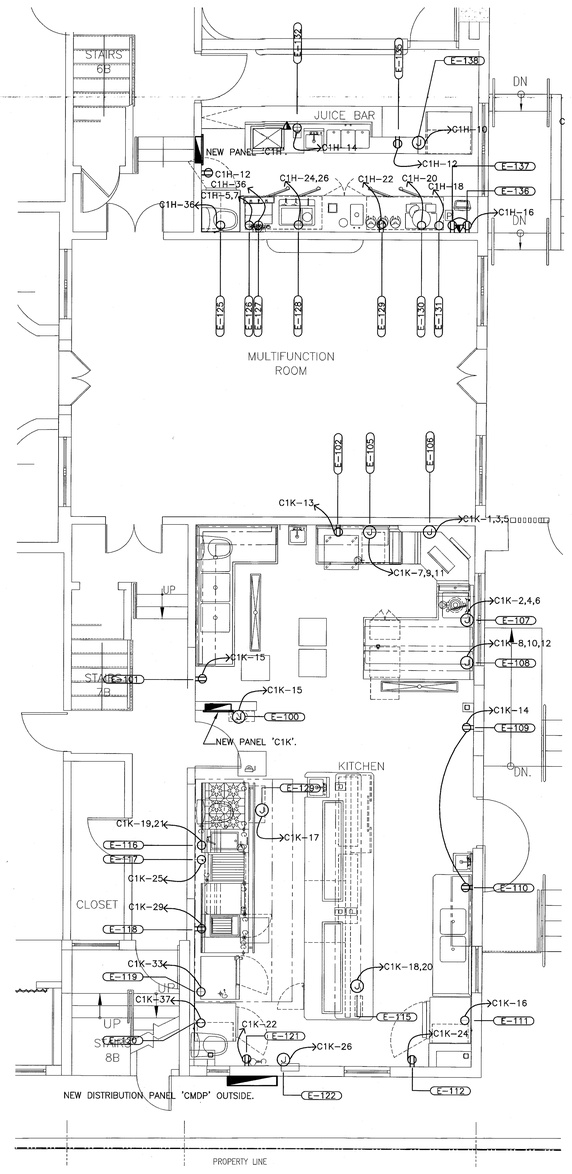

1ST FLOOR KITCHEN ELECTRICAL PLAN

SCALE: 1/4"=1'-0"

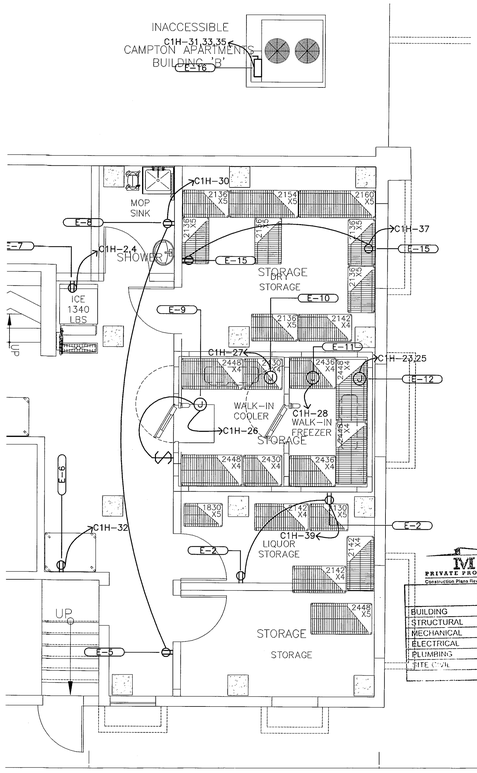

CELLAR ELECTRICAL PLAN

SCALE: 1/4"=1'-0"

MAY 09 2014

STEVEN M. FELLER LICENSE No. 22046 STATE OF FLORIDA PROFESSIONAL ENGINEER

APPROVED MIAMI BEACH FIRE DEPARTMENT

STEVEN FELLER P.E., P.L.
FLORIDA P.E. Reg. # 22046
Certificate of Authorization # 00003427
500 N.E. THIRD AVENUE
FORT LAUDERDALE, FLORIDA 33301
PH: 954.467.1402 FAX: 954.467.3752
e-mail: fellerpe@fellerpe.com
JOB # 13153

HADDON HALL
1500 COLLINS AVE

MIAMI BEACH, FL

KEYPLAN N.T.S.

REVISIONS

NO.	DESCRIPTION	ISSUE DATE
1	100% CD COORD. REVISION	2-18-14

100% CONSTRUCTION DOCUMENT SET

NORTH SEAL

Jonathan Cardello
Lic. # AR93391

ADD Inc Architecture Interiors Planning

One Biscayne Tower
Suite 1670
Two South
Biscayne Boulevard
Miami, Fl 33131
T. 305.482.8700
F. 305.482.8770
www.addinc.com
Lic. # AA26001507

Boston Miami

MTCI PRIVATE PROVIDER SERVICES, LLC
Construction Plans Review, Inspections, Testing & Consulting

	REVIEWER INITIALS	DATE REVIEWED
BUILDING		
STRUCTURAL		
MECHANICAL		
ELECTRICAL	TDC	11-10-14
PLUMBING		
FIRE / LIFE SAFETY		

JOB NUMBER: 13036.00

CHECKED BY:

ISSUE DATE: MARCH 14, 2014

SCALE: AS NOTED

SHEET TITLE

ENLARGED CELLAR AND KITCHEN ELECTRICAL PLAN

SHEET NUMBER

E2.10 (1)

COPYRIGHT ADD INC 2011

File: C:\Revit Local Files\13153-Haddon Hall_Central_Jonathan.rvt
User: Jonathan Cardello
Date: 3/14/2014 01:08:48 PM

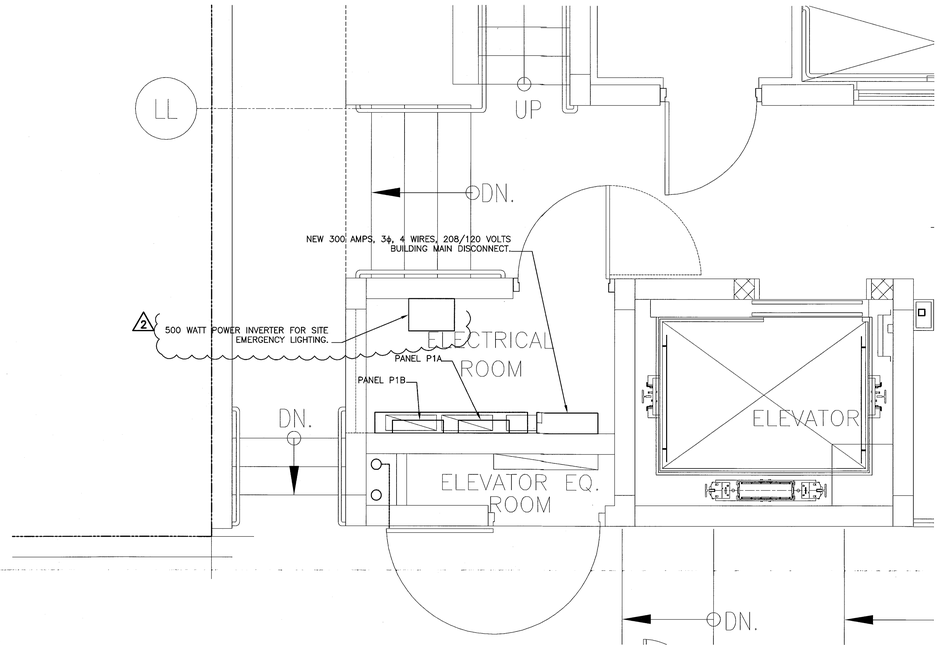

POOL SUITES ENLARGED ELECTRICAL ROOM

SCALE: 1/2"=1'-0"

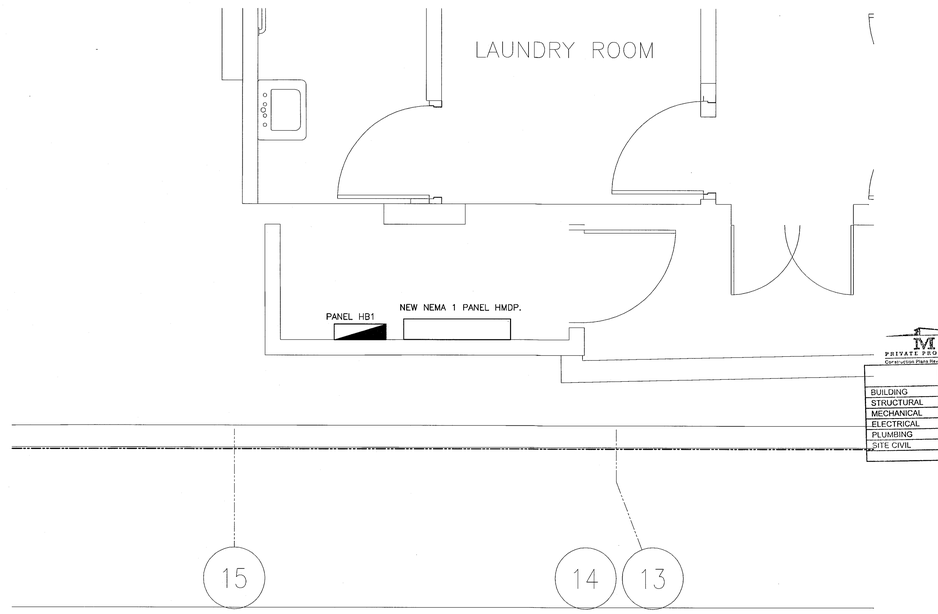

M T C I
PRIVATE PROVIDER SERVICES, LLC
Construction Plans Review, Inspections, Training & Consulting

	REVIEWER INITIALS	DATE REVIEWED
BUILDING		
STRUCTURAL		
MECHANICAL		
ELECTRICAL	TDC	11-10-14
PLUMBING		
SITE CIVIL		

HADDON HALL ENLARGED ELECTRICAL ROOM

SCALE: 1/2"=1'-0"

ENLARGED ELECTRICAL ROOMS

SCALE: 1/2"=1'-0"

MAY 09 2014
STEVEN M. FELLER
LICENSE
No. 22046
STATE OF
FLORIDA
PROFESSIONAL ENGINEER

APPROVED
MIAMI BEACH
FIRE DEPARTMENT

STEVEN FELLER P.E.,PL
FLORIDA P.E. Reg. # 22046
Certificate of Authorization # 00003427
500 N.E. THIRD AVENUE
FORT LAUDERDALE, FLORIDA 33301
PH: 954.467.1402 FAX: 954.467.5752
e-mail: fellerpe@fellerpe.com
JOB # 13153

HADDON HALL
1500 COLLINS AVE

MIAMI BEACH, FL

KEYPLAN N.T.S.

REVISIONS

NO.	DESCRIPTION	ISSUE DATE
1	100% CD COORD. REVISION	2-18-14
2	FIRE REVIEW COMMENTS	4-7-14

100% CONSTRUCTION DOCUMENT SET

NORTH SEAL

Jonathan Cardello
Lic. # AR93391

ADD Inc Architecture Interiors Planning

One Biscayne Tower
Suite 1670
Two South
Biscayne Boulevard
Miami, Fl 33131
T. 305.482.8700
F. 305.482.8770
www.addinc.com
Lic. # AA26001507

Boston Miami

JOB NUMBER: 13036.00
CHECKED BY:
ISSUE DATE: MARCH 14, 2014
SCALE: AS NOTED

SHEET TITLE

ENLARGED ELECTRICAL ROOMS

SHEET NUMBER

E2.11

COPYRIGHT ADD INC 2011

File: K:\Miami\13036.00 Haddon Hall\Revit\13036.00 Haddon Hall_Central.rvt
User: Jaime Tobar Printed: 5/8/2014 8:38:19 AM E2.11

DEMAND LOAD CALCULATION POOL SUITES BUILDING: (3ø, 120/208V)

WIREWAY P DEMAND LOAD CALCULATION:

PANEL 'P1A':
GUESTROOMS LIGHTING AND RECEPTACLES = 8.472.
DEMAND = 8.472(0.5) (NEC TABLE 220.42) = 4.236 KVA
A/C @ 100% = 2.247 KVA

TOTAL PANEL P1A DEMAND = 14.95 KVA

PANEL 'P1B':
COMMON AREAS LIGHTING @ 125% = (1.25)7.74 KVA = 9.675 KVA
COMMON AREAS RECEPTACLES = 2.44 KVA
HVAC LOAD @ 100% = 21.674 KVA

TOTAL PANEL P1B DEMAND = 9.675 + 2.44 + 21.674 = 33.79 KVA

ELEVATOR---------- 27.09 KVA

TOTAL ESTIMATED POOL SUITES BUILDING DEMAND LOAD:
14.95 + 21.674 + 27.09 = 63.71 KVA.

AMPERAGE @ BALANCED 208/120V 3-PHASE SERVICE = 177 AMP

MAIN: 200 AMP - 3ø, 120/208V

PANEL CMDP DEMAND LOAD CALCULATION:

CAMPTON GUESTROOMS LIGHTING + RECEPTACLES (PANELS C1A, C1B, C1C, C1D, C2A, C2B, C2C AND C2D)
FIRST LEVEL------- 9.502 KVA (@ 2 VA/SQ-FT)
SECOND LEVEL----- 13.31 KVA (@ 2 VA/SQ-FT)

TOTAL HOTEL ROOMS LIGHTING + RECEPTACLES = 22.814

PANEL CMDP A/C LOAD @ 100%----------59.623 KVA

HOUSE LIGHTING @ 125% = 14.164(1.25) = 17.70 KVA

HOUSE RECEPTACLES = 17.76 KVA (NEC-2008 TABLE 220.44)
HOUSE RECEPTACLES DEMAND = 10 + 7.76(0.5) = 13.88 KVA

OTHER HOUSE EQUIPMENT:
PANEL 'C1K' = 87.969 @65% BY NEC-220.56 = (0.65)(87.97) = 57.18 KVA
PANEL C1H = 29.98 @65% BY NEC 220.56 = 29.98(0.65) = 19.48 KVA
POOL PANEL = 19.06 KVA

TOTAL OTHER EQUIPMENT = 95.73 KVA

GUESTROOMS LIGHTING + RECEPTACLES DEMAND = 11.125 KVA (NEC-2008 TABLE 220.42)

TOTAL DEMAND = 11.12 + 59.62 + 17.70 + 13.88 + 95.73 = 198.04 KVA

DEMAND AMPS = 198.04/(1.7321)0.208 = 550 AMPS. 1

PANEL HMDP DEMAND LOAD CALCULATION:

GUESTROOMS LIGHTING + RECEPTACLES
FIRST LEVEL------- 16.449 KVA(@ 2 VA/SQ-FT)
SECOND LEVEL------ 24.419 KVA
3RD LEVEL -------- 22.80 KVA
TOTAL HOTEL ROOMS LIGHTING + RECEPTACLES = 63.675

ALL PANEL A/C LOAD @ 100%----------185.03 KVA

HOUSE LIGHTING @ 125% = 23.34(1.25) = 29.17 KVA

HOUSE RECEPTACLES = 34.2 KVA (NEC-2008 TABLE 220.44)
HOUSE RECEPTACLES DEMAND = 10 + 24.2(0.5) = 22.10 KVA

OTHER HOUSE EQUIPMENT:
PANEL 'HB' BAR LOAD = 11.16 KVA @65% BY NEC-220.56 = (0.65)(11.16) = 7.25 KVA
EXISTING ELEVATOR LOAD = 8.718 KVA
FOUNTAIN EQUIPMENT = 3.00 KVA
@BASEMENT EQUIPMENT = 7.73 KVA
TOTAL OTHER HOUSE EQUIPMENT = 19.45 KVA

GUESTROOMS LIGHTING + RECEPTACLES DEMAND = 27.47 KVA (NEC-2008 TABLE 220.42)

TOTAL DEMAND = 27.47 + 185.03 + 29.17 + 22.10 + 19.45 + 7.25 = 290.47 KVA

DEMAND AMPS = 290.47/(1.7321)0.208 = 807 AMPS. 1

NEW MAIN: 1000 AMPS- 3ø, 120/208V

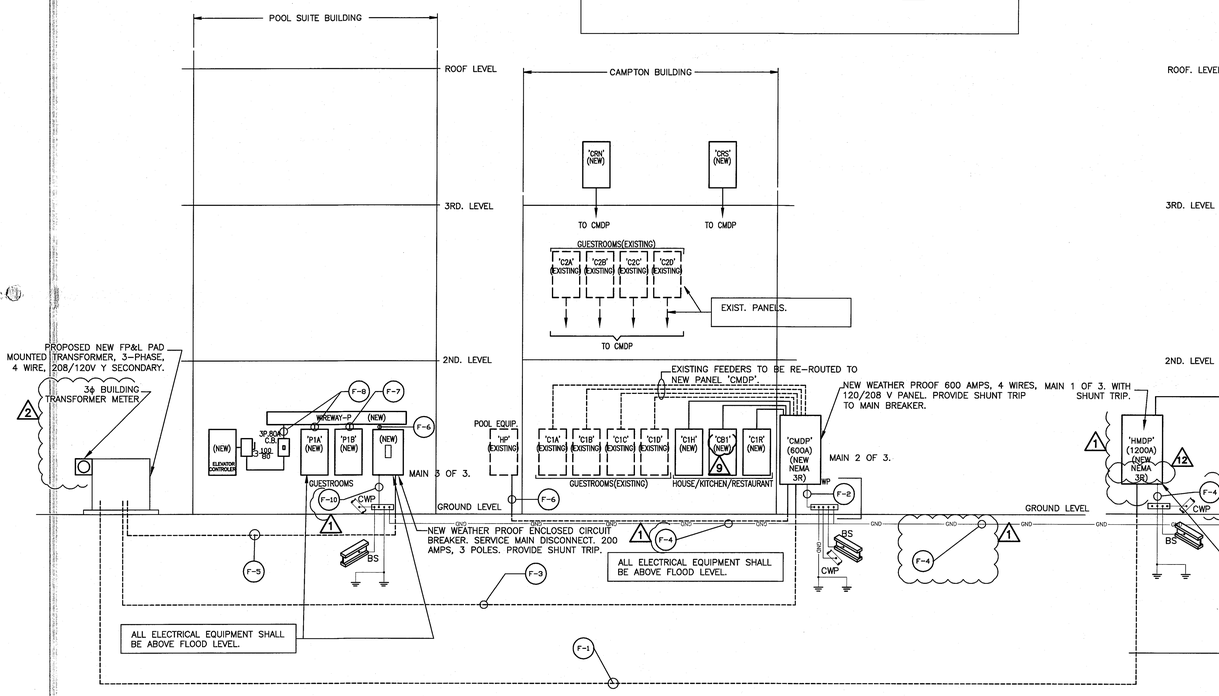

FEEDERS SCHEDULE (NEW)

SYMBOL	WIRE AND CONDUIT
F-1	4 SETS OF 4-350KCMIL IN 3"C. ENCASED IN CONCRETE, 2" MINIMUM.
F-2	1 #1/0 CU. GR. IN 1" EC.
F-3	2 SETS OF 4-350 KCMIL IN 3"C. ENCASED IN CONCRETE, 2" MINIMUM.
F-4	1 #3/0 CU. GR. IN 1" EC.
F-5	1 SET OF 4 #4/0 IN 2 1/2"C. ENCASED IN CONCRETE, 2" MINIMUM.
F-6	1 SET OF 4 #4/0 + 1-#6 (GR) IN 2 1/2"C.
F-7	1 SET OF 4 #1 &1# 6 (G) IN 1 1/2"C.
F-8	1 SET OF 4 #4 &1#8 (G) IN 1 1/4"C.
F-9	1 SETS OF 4 #350 &1# 4 (G) IN 3"C.
F-10	1 #2 CU. GR. IN 1" EC.

PLAN NOTES:
1-ALL ELECTRICAL FEEDERS FROM UTILITY TRANSFORMER TO BUILDINGS TO BE UNDERGROUND.
2-CONTRACTOR TO VERIFY EXISTING ELECTRICAL EQUIPMENT AIC CAN WITHSTAND NEW FPL SERVICE SHORT CIRCUIT LEVELS.
3-SERVICE AND FEEDERS VOLTAGE DROP CALCULATED AT MAXIMUM 2%. BRANCH CIRCUITS VOLTAGE DROP AT 3% MAXIMUM AS PER 2010 FBC, ENERGY 505.3.5.

MTCI
PRIVATE PROVIDER SERVICES, LLC
Construction Plans Review, Inspections, Testing & Consulting

	REVIEWER INITIALS	DATE REVIEWED
BUILDING		
STRUCTURAL		
MECHANICAL		
ELECTRICAL	TDC	11-10-14
PLUMBING		
SITE CIVIL		

SERVICE DEMAND LOAD FOR ENTIRE PROJECT:
(PROPOSED NEW SERVICE 3ø, 120/208V)

GUESTROOMS LIGHTING AND RECEPTACLES CONNECTED:
HADDON HALL----------63.675 KVA
CAMPTON BUILDING----------22.814 KVA
POOL SUITES----------8.472 KVA
TOTAL GUESTROOM CONNECTED = 94.961 KVA
DEMAND = 10 + 74.96(0.4) = 39.98 KVA

ALL COMPLEX HOUSE RECEPTACLES CONNECTED:
54.4 KVA
RECEPTACLES DEMAND = 10 + 44.4(0.5) = 32.20 KVA

TOTAL HVAC CONNECTED LOAD @ 100% DEMAND = 268.57 KVA

OTHER EQUIPMENT
HADDON HALL ----------31.71 KVA (DEMAND)
CAMPTON BUILDING----------56.79 KVA (DEMAND)
POOL SUITES----------27.09 KVA (NEW ELEVATOR)
TOTAL OTHER EQUIPMENT DEMAND = 115.59 KVA

COMMON AREAS LIGHTING @ 125%
HADDON HALL CONNECTED: 29.17 KVA
CAMPTON BUILDING CONNECTED: 17.70 KVA
POOL SUITES CONNECTED: 7.74 KVA
TOTAL COMPLEX LIGHTING DEMAND: 54.61(1.25) = 68.26 KVA

TOTAL COMPLEX DEMAND LOAD =
39.98 + 32.20 + 268.57 + 115.59 + 68.26 = 524.60 KVA

SEP 04 2014

STEVEN M. FELLER LICENSE No 22046 STATE OF FLORIDA PROFESSIONAL ENGINEER

APPROVED MIAMI BEACH FIRE DEPARTMENT

ELECTRICAL RISER DIAGRAM
SCALE: N.T.S.

STEVEN FELLER P.E.,PL
FLORIDA P.E. Reg. # 22046
Certificate of Authorization # 00003427
500 N.E. THIRD AVENUE
FORT LAUDERDALE, FLORIDA 33301
PH: 954.467.1402 FAX: 954.467.3752
e-mail: fellerpe@fellerpe.com
JOB # 13153

HADDON HALL
1500 COLLINS AVE
MIAMI BEACH, FL

KEYPLAN N.T.S.

REVISIONS

NO.	DESCRIPTION	ISSUE DATE
1	100% CD COORD. REVISION	2-18-14
2	PERMIT REVIEW COMMENTS	3-14-14
9	KITCHEN RELOCATION	5-30-14
12	FIRE DPMT. PERMIT COMM.	8-21-14

100% CONSTRUCTION DOCUMENT SET

NORTH SEAL

Jonathan Cardello
Lic. # AR93391

ADD Inc Architecture Interiors Planning

One Biscayne Tower
Suite 1670
Two South
Biscayne Boulevard
Miami, Fl 33131
T. 305.482.8700
F. 305.482.8770
www.addinc.com
Lic. # AA26001507

Boston Miami

JOB NUMBER: 13036.00
CHECKED BY:
ISSUE DATE: MARCH 14, 2014
SCALE: AS NOTED

SHEET TITLE

ELECTRICAL RISER DIAGRAM

SHEET NUMBER

E3.01

COPYRIGHT ADD INC 2011

PANELBOARD "HB"

LOBBY LEVEL BAR NEW PANEL

MOUNTING: SURFACE — VOLT: 208/120V,3Ø,4W
SHORT CIRCUIT RATING: 65K — MAIN BUS AMPS: 225 A
POLES: 42 — MAIN BREAKER AMPS: MLO
FED FROM PANEL: HMDP — MANUFACTURER/TYPE:

	CKT	LOAD SERVED	POLE	TRIP	WIRE	COND	LOAD	LOAD	COND	WIRE	TRIP	POLE	LOAD SERVED	CKT	
(1)	1	BAR RECEPT.	1	20	12	1/2"	360	1,152	1/2"	12	20	1	BACKBAR CABINET (E-122)	2	(1)
(1)	3	BAR RECEPT.	1	20	12	1/2"	720	720	1/2"	12	20	1	CONV. OUTLETS (E-125)	4	(1)
(1)	5	BAR/COFFEE LIGHTING	1	20	12	1/2"	500	360	1/2"	12	20	1	P.O.S OUTLETS (E-127, 128)	6	(1)
	7	SPACE						2,400	1/2"	12	20	2	EXPRESSO MACHINE (E-129)	8	
	9	SPACE												10	
	11	SPACE						1,356	1/2"	12	20	1	COFFEE BREWER (E-130)	12	(1)
	13	SPACE						1,152	1/2"	12	20	1	BACKBAR CABINET (E-131)	14	(1)
	15	SPACE						984	1/2"	12	20	1	BACKBAR REFRIG. (E-132)	16	(1)
	17	SPACE						720	1/2"	12	20	1	CONV. OUTLETS (E-135)	18	(1)
	19	SPACE						11,564	3/4"	8	45	3	GLASS WASHER (E-121)	20	
	21	SPACE												22	
	23	SPACE												24	
	25	SPACE						720	1/2"	12	20	1	CONV. OUTLETS (E-119, 120)	26	
	27	SPACE											SPACE	28	
	29	SPACE											SPACE	30	
	31	SPACE											SPACE	32	
	33	CU-5	2	60	6	1"	10,087						SPACE	34	
	35												SPACE	36	
	37	AHU-5	2	70	4	1 1/4"	11,580						SPACE	38	
	39												SPACE	40	
	41	SPACE											SPACE	42	
							23,247	21,128							

TOTAL CONNECTED LOAD = 44,375 VA
TOTAL CONNECTED AMPS = 124 AMPS
Note: (1) GFCI TYPE C.B. (4) NEW CIRCUIT BREAKER
(2) CIRCUIT CONTROLLED VIA PHOTOCELL (6) AFCI TYPE C.B.
(3) EXISTING C.B.NEW CIRCUIT LOADING

PANELBOARD "HIT"

3RD LEVEL NEW PANEL

MOUNTING: SURFACE — VOLT: 208/120V,3Ø,4W
SHORT CIRCUIT RATING: 42K MATCH EXISTING AIC LEVEL — MAIN BUS AMPS: 100 A
POLES: 24 — MAIN BREAKER AMPS: MLO
FED FROM PANEL: HMDP — MANUFACTURER/TYPE:

	CKT	LOAD SERVED	POLE	TRIP	WIRE	COND	LOAD	LOAD	COND	WIRE	TRIP	POLE	LOAD SERVED	CKT	
	1	RECEPTACLES	1	20	12	1/2"	520	520	1/2"	12	20	1	GENERAL PURPOSE RECEPT.	2	(2)
(2)	3	RECEPTACLES	1	20	12	1/2"	520	520	1/2"	12	20	1	GENERAL PURPOSE RECEPT.	4	
	5	RECEPTACLES	2	20	12	1/2"	2,000	520	1/2"	12	20	1	GENERAL PURPOSE RECEPT.	6	
	7							520	1/2"	12	20	1	GENERAL PURPOSE RECEPT.	8	
(2)	9	RECEPTACLES	2	20	12	1/2"	2,000	520	1/2"	12	20	1	GENERAL PURPOSE RECEPT.	10	
	11							520	1/2"	12	20	1	GENERAL PURPOSE RECEPT.	12	(2)
	13	IT-AHU	2	20	12	1/2"	125	520	1/2"	12	20	1	GENERAL PURPOSE RECEPT.	14	
	15							520	1/2"	12	20	1	GENERAL PURPOSE RECEPT.	16	
	17							50	1/2"	12	20	1	AUTOMATIC FS DAMPERS	18	
	19													20	
	21	SPACE											SPACE	22	
	23	SPACE											SPACE	24	
							5,165	4,210							

TOTAL CONNECTED LOAD = 9,375 VA
TOTAL CONNECTED AMPS = 27 AMPS
Note: (1) GFCI C.B.
(2) VIA PHOTOCELL
(3) VIA TIME CLOCK

3

PANELBOARD "HL"

GROUND LEVEL NEW PANEL

MOUNTING: SURFACE — VOLT: 208/120V,3Ø,4W
SHORT CIRCUIT RATING: 42K MATCH EXISTING AIC LEVEL — MAIN BUS AMPS: 100 A
POLES: 24 — MAIN BREAKER AMPS: MLO
FED FROM PANEL: HMDP — MANUFACTURER/TYPE:

	CKT	LOAD SERVED	POLE	TRIP	WIRE	COND	LOAD	LOAD	COND	WIRE	TRIP	POLE	LOAD SERVED	CKT	
	1	1ST LEVEL LIGHTING	1	20	12	1/2"	800	800	1/2"	12	20	1	1ST LEVEL LIGHTING	2	(2)
(2)	3	1ST LEVEL LIGHTING	1	20	12	1/2"	400	1,200	1/2"	12	20	1	FIRE ALARM PANEL	4	
	5	LANDSCAPE LIGHTING	1	20	12	1/2"	295	900	1/2"	12	20	1	1ST LEVEL RECEPTACLES	6	
	7	FOUNTAIN LIGHTING	1	20	12	1/2"	100	900	1/2"	12	20	1	1ST LEVEL RECEPTACLES	8	
(2)	9	EXTERIOR LIGHTING	1	20	12	1/2"	275	1,080	1/2"	12	20	1	1ST LEVEL RECEPTACLES	10	
(4)	11	LANDSCAPE LIGHTING	1	20	12	1/2"	295	341	1/2"	12	20	1	LANDSCAPE LIGHTING	12	(2)
	13	EXTERIOR LIGHTING	1	20	12	1/2"	265						SPACE	14	
	15	SPACE											SPACE	16	
	17	AHU-E-1, E-2	2	20	12	1/2"	374						SPACE	18	
	19												SPACE	20	
	21	SPACE											SPACE	22	
	23	SPACE											SPACE	24	
							2,834	5,221							

TOTAL CONNECTED LOAD = 9,055 VA
TOTAL CONNECTED AMPS = 23 AMPS
Note: (1) GFCI C.B.
(2) VIA PHOTOCELL
(3) VIA TIME CLOCK
(4) VIA 500 W EMERGENCY POWER INVERTER

1 3 4

PANELBOARD "HB1"

BASEMENT NEW PANEL

MOUNTING: SURFACE — VOLT: 208/120V,3Ø,4W
SHORT CIRCUIT RATING: 65K — MAIN BUS AMPS: 100 A
POLES: 42 — MAIN BREAKER AMPS: MLO
FED FROM PANEL: HMDP — MANUFACTURER/TYPE:

	CKT	LOAD SERVED	POLE	TRIP	WIRE	COND	LOAD	LOAD	COND	WIRE	TRIP	POLE	LOAD SERVED	CKT	
(3)	1	BASEMENT LEVEL LIGHTING	1	20	12	1/2"	740	1,200	1/2"	12	20	1	WATER FOUNTAIN	2	(3)
	3	BASEMENT LEVEL LIGHTING	1	20	12	1/2"	720	900	1/2"	12	20	1	BASEMENT LEVEL RECEPT.	4	
	5	BASEMENT LEVEL LIGHTING	1	20	12	1/2"	670	720	1/2"	12	20	1	BASEMENT LEVEL RECEPT.	6	
	7	LANDSCAPE LIGHTING	1	20	12	1/2"	1	63	1/2"	12	20	2	BASEMENT AHUs	8	
	9	LIN/EN RM. FAN COIL (E-12)	1	20	12	1/2"	216	63						10	
	11							400	1/2"	12	20	1	LANDSCAPE LIGHTING	12	(5)
	13	LIN/EN ROOM CU (E-19)	3	30	10	3/4"	7,169	360	1/2"	12	20	1	BASEMENT LEVEL RECEPT.	14	
	15							9,375	3/4"	8	40	3	PANEL HIT	16	
	17													18	
	19	CONV. OUTLETS (E-11)	1	20	12	1/2"	360							20	
	21	SPACE											SPACE	22	
	23	SPACE											SPACE	24	
	25	SPACE											SPACE	26	
	27	SPACE											SPACE	28	
	29	SPACE											SPACE	30	
	31	SPACE											SPACE	32	
	33	SPACE											SPACE	34	
	35	SPACE											SPACE	36	
	37	SPACE											SPACE	38	
	39	SPACE											SPACE	40	
	41	SPACE											SPACE	42	
							9,876	13,081							

TOTAL CONNECTED LOAD = 22,957 VA
TOTAL CONNECTED AMPS = 64 AMPS
Note: (1) GFCI C.B.
(2) SHUNT TRIP C.B.
(3) VIA TIME CLOCK
(4) VIA PHOTOCELL
(5) VIA EMERGENCY POWER INVERTER

1 12

PANELBOARD "HRS"

ROOF NEW PANEL

MOUNTING: SURFACE — VOLT: 208/120V,3Ø,4W
SHORT CIRCUIT RATING: 25K — MAIN BUS AMPS: 400 A
POLES: 42 — MAIN BREAKER AMPS: MLO
FED FROM PANEL: HMDP — MANUFACTURER/TYPE:

	CKT	LOAD SERVED	POLE	TRIP	WIRE	COND	LOAD	LOAD	COND	WIRE	TRIP	POLE	LOAD SERVED	CKT	
	1	ACCU-7	3	35	8	3/4"	5,990	5,990	3/4"	8	35	3	ACCU-8	2	
	3													4	
	5													6	
	7	ACCU-9	3	35	8	3/4"	5,990	10,660	1"	6	50	3	ACCU-10	8	
	9													10	
	11													12	
	13	ACCU-11	3	50	6	1"	9,686	9,686	1"	6	50	3	ACCU-12	14	
	15													16	
	17													18	
	19	ACCU-15	3	50	6	1"	10,660	790	1/2"	12	20	2	CU-4	20	
	21							790						22	
	23							790	1/2"	12	20	2	CU-3	24	
	25	SPACE						790						26	
	27	SPACE											SPACE	28	
	29	SPACE											SPACE	30	
3	31	ROOF LIGHTING	1	20	12	1/2"	300						SPACE	32	
(4)	33	ROOF LIGHTING	1	20	12	1/2"	1,500						SPACE	34	
(4)	35	ROOF LIGHTING	1	20	12	1/2"	1,500						SPACE	36	
(1)	37	ROOF RECEPTACLES	1	20	12	1/2"	1,500	14,656	1"	6	50	3	PANEL HMS	38	
	39	SPARE	1	20	12	1/2"	1,500							40	
	41	SPARE	1	20	12	1/2"	1,500							42	
							40,126	44,152							

TOTAL CONNECTED LOAD = 84,278 VA
TOTAL CONNECTED AMPS = 235 AMPS
Note: (1) GFCI C.B.
(2) SHUNT TRIP C.B.
(3) VIA TIME CLOCK
(4) VIA PHOTOCELL

PANELBOARD "HRN"

ROOF NEW PANEL

MOUNTING: SURFACE — VOLT: 208/120V,3Ø,4W
SHORT CIRCUIT RATING: 25K — MAIN BUS AMPS: 400 A
POLES: 42 — MAIN BREAKER AMPS: MLO
FED FROM PANEL: HMDP — MANUFACTURER/TYPE:

	CKT	LOAD SERVED	POLE	TRIP	WIRE	COND	LOAD	LOAD	COND	WIRE	TRIP	POLE	LOAD SERVED	CKT	
	1	ACCU-1	3	50	6	1"	10,660	10,660	1"	6	50	3	ACCU-2	2	
	3													4	
	5													6	
	7	ACCU-3	3	50	6	1"	10,660	9,686	1"	6	50	3	ACCU-4	8	
	9													10	
	11													12	
	13	ACCU-5	3	35	8	3/4"	5,990	5,990	3/4"	8	35	3	ACCU-6	14	
	15													16	
	17													18	
	19	ACCU-13	3	50	6	1"	9,686	9,686	1"	6	50	3	ACCU-14	20	
	21													22	
	23													24	
	25	AHU ROOMS A101, A102,	2	15	12	1/2"	1,145	687	1/2"	12	15	2	AHU ROOMS A111, A112,	26	
	27	A103, A104, A105											A114	28	
	29	AHU ROOMS A106, A107,	2	15	12	1/2"	1,145	687	1/2"	12	15	2	AHU ROOMS A115, A116,	30	
	31	A108, A109, A110											A117	32	
(4)	33	ROOF LIGHTING	1	20	12	1/2"	1,500							34	
(4)	35	ROOF LIGHTING	1	20	12	1/2"	1,500							36	
(1)	37	ROOF RECEPTACLES	1	20	12	1/2"	1,500	12,824	1"	6	50	3	PANEL HMN	38	
	39	SPARE	1	20	12	1/2"	1,500							40	
	41	SPARE	1	20	12	1/2"	1,500							42	
							46,786	50,220							

TOTAL CONNECTED LOAD = 97,006 VA
TOTAL CONNECTED AMPS = 270 AMPS
Note: (1) GFCI C.B.
(2) SHUNT TRIP C.B.
(3) VIA TIME CLOCK
(4) VIA PHOTOCELL

"HMDP"

(NEW PANEL) (NEMA 3R) 12

MOUNTING: SURFACE — VOLT: 208/120V,1Ø,3W
SHORT CIRCUIT RATING: 65K 12 — MAIN BUS AMPS: 1200 A
POLES: 54 — MAIN BREAKER AMPS: 1000 A(4)(1)
FED FROM PANEL: HADDON HALL SERVICE — MANUFACTURER/TYPE: SIEMENS

	CKT	LOAD SERVED	POLE	TRIP	WIRE	COND	LOAD	A	B	C	LOAD	COND	WIRE	TRIP	POLE	LOAD SERVED	CKT	
	1	PANEL HB1	3	100	3	1 1/4"	7,852	10,337			2,685	1 1/4"	4	70	3	PANEL HL	2	
	3						7,852		10,337		2,685						4	
	5						7,852			10,337	2,685						6	
(5)	7	PANEL H1A	2	70	4	1 1/4"	1,624	4,858			3,235	1 1/4"	4	70	2	PANEL H1B	8	(5)
(5)	9						1,624		4,858		3,235						10	
	11	EXISTING ELEVATOR	3	35	10	1/2"	2,906			4,355	1,449	1 1/4"	4	70	2	PANEL H1D	12	(5)
	13						2,906	4,355			1,449						14	
	15						2,906		4,907		2,001	1 1/4"	3	100	2	PANEL H1F	16	(5)
	17	SPACE				12				2,001	2,001						18	
	19	PANEL HB	3	150	10	2"	14,792	18,316			3,525	1 1/4"	3	100	2	PANEL H2A	20	(5)
	21						14,792		18,316		3,525						22	
	23						14,792			18,864	4,073	1 1/4"	3	100	2	PANEL H2C	24	(5)
(5)	25	PANEL H2B	2	100	3	1 1/4"	4,910	8,982			4,073						26	
	27						4,910		8,459		3,550	1 1/4"	3	100	2	PANEL H3A	28	(5)
(5)	29	PANEL H3B	2	100	3	1 1/4"	5,418			8,967	3,550						30	
	31						625	5,176			4,551	1 1/4"	3	100	2	PANEL H3C	32	(5)
	33	PANEL HRS	3	300	350	3"	28,093		32,644		4,551						34	
	35						28,093			60,428	32,335	3"	400	350	3	PANEL HRN	36	
	37						28,093	10,428			32,335						38	
(5)	39	PANEL H1E	2	125	1	1/2"	11,026		43,361		32,335						40	
	41					12	11,026			11,026						SPACE	42	
	43	SPACE						0								SPACE	44	
	45	SPACE							0							SPACE	46	
	47	SPACE								0						SPACE	48	
	49	SPACE						0								SPACE	50	
	51	SPACE							0							SPACE	52	
	53	SPACE								0						SPACE	54	
							TOTAL THIS PANEL	112,452	122,882	115,977								

TOTAL CONNECTED LOAD = 351,311 VA
MOST LOADED PHASE AMPS = 1024.01 AMPS (SEE DEMAND LOAD CALCULATION FOR FEEDER SIZE).
Note: (1) SHUNT TRIP TYPE C.B. (4) SEE DEMAND LOAD CALCULATION
(2) CIRCUIT CONTROLLED VIA PHOTOCELL (5) GUESTROOMS LOAD AT 2 VA/SQ-FT.
(3) GFCI TYPE C.B.

PANEL HMDP DEMAND LOAD CALCULATION:

GUESTROOMS LIGHTING + RECEPTACLES
FIRST LEVEL------ 16,449 KVA(@ 2 VA/SQ-FT)
SECOND LEVEL------ 24,419 KVA
3RD LEVEL -------- 22.80 KVA
TOTAL HOTEL ROOMS LIGHTING + RECEPTACLES = 63.675

ALL PANEL A/C LOAD @ 100%----------185.03 KVA

HOUSE LIGHTING @ 125% = 23.34(1.25) = 29.17 KVA

HOUSE RECEPTACLES = 34.2 KVA (NEC-2008 TABLE 220.44)
HOUSE RECEPTACLES DEMAND = 10 + 24.2(0.5) = 22.10 KVA

OTHER HOUSE EQUIPMENT:
PANEL 'HB' BAR LOAD = 11.16 KVA @65% BY NEC-220.56 = (0.65)(11.16) = 7.25 KVA
PANEL HIT = 10.00 KVA
EXISTING ELEVATOR LOAD = 8.718 KVA
FOUNTAIN EQUIPMENT = 3.00 KVA
BASEMENT EQUIPMENT = 7.73 KVA
TOTAL OTHER HOUSE EQUIPMENT = 19.45 KVA

GUESTROOMS LIGHTING + RECEPTACLES DEMAND = 27.47 KVA (NEC-2008 TABLE 220.42)

TOTAL DEMAND = 27.47 + 185.03 + 29.17 + 22.10 + 19.45 + 7.25 + 10.0 = 300.47 KVA

DEMAND AMPS = 300.47/(1.7321)0.208 = 834 AMPS. 1 3

NEW SERVICE FEEDER: SEE POWER RISER DIAGRAM.

NEW MAIN: 1000 AMPS- 3ø, 120/208V

DRAWING NOTES:

1-ONLY NEW PANEL SCHEDULES SHOWN.
2-EXISTING PANELS INCLUDED ONLY FOR CALCULATIONS AS GENERAL LIGHTING OR RECEPTACLES.

ELECTRICAL PANEL SCHEDULES

SCALE: N.T.S.

HADDON HALL
1500 COLLINS AVE

MIAMI BEACH, FL

KEYPLAN N.T.S.

REVISIONS

NO.	DESCRIPTION	ISSUE DATE
1	100% CD COORD. REVISION	2-18-14
3	COORD. REVISION	3-14-14
4	FIRE REVIEW COMMENTS	4-7-14
9	KITCHEN RELOCATION	5-30-14
12	FIRE DPMT. PERMIT COMM.	8-21-14

100% CONSTRUCTION DOCUMENT SET

NORTH SEAL

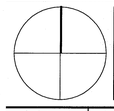

Jonathan Cardello
Lic. # AR93391

ADD Inc Architecture Interiors Planning

One Biscayne Tower
Suite 1670
Two South
Biscayne Boulevard
Miami, Fl 33131
T. 305.482.8700
F. 305.482.8770
www.addinc.com
Lic. # AA26001507

Boston Miami

JOB NUMBER: 13036.00
CHECKED BY:
ISSUE DATE: MARCH 14, 2014
SCALE: AS NOTED

SHEET TITLE

ELECTRICAL PANELS

SHEET NUMBER

E3.02

COPYRIGHT ADD INC 2011

MTCI PRIVATE PROVIDER SERVICES, LLC
Construction Plans Review, Inspections & Consulting

	REVIEWER INITIALS	DATE REVIEWED
BUILDING		
STRUCTURAL		
MECHANICAL		
ELECTRICAL	TDC	11-10-14
PLUMBING		
SITE CIVIL		

SEP 04 2014

STEVEN M. FELLER LICENSE No. 22046 STATE OF FLORIDA PROFESSIONAL ENGINEER

APPROVED MIAMI BEACH FIRE DEPARTMENT

STEVEN FELLER P.E., PL
FLORIDA P.E. Reg. # 22046
Certificate of Authorization # 00003427
500 N.E. THIRD AVENUE
FORT LAUDERDALE, FLORIDA 33301
PH: 954.467.1402 FAX: 954.467.5752
e-mail: fellerpe@fellerpe.com
JOB # 13153

File: E:\Haddon Hall\Cad\Revised 12 Electrical\E3.02 Electrical Panel Schedules.dwg | Layout: E3.02
User: greg | Date/Time: Sep 04, 2014 - 4:47pm | XREFs: