CS™ Louvers

ARCHITECTURAL LOUVERS

AIRFLOW FUNCTION.

design freedom.

Construction Specialties™

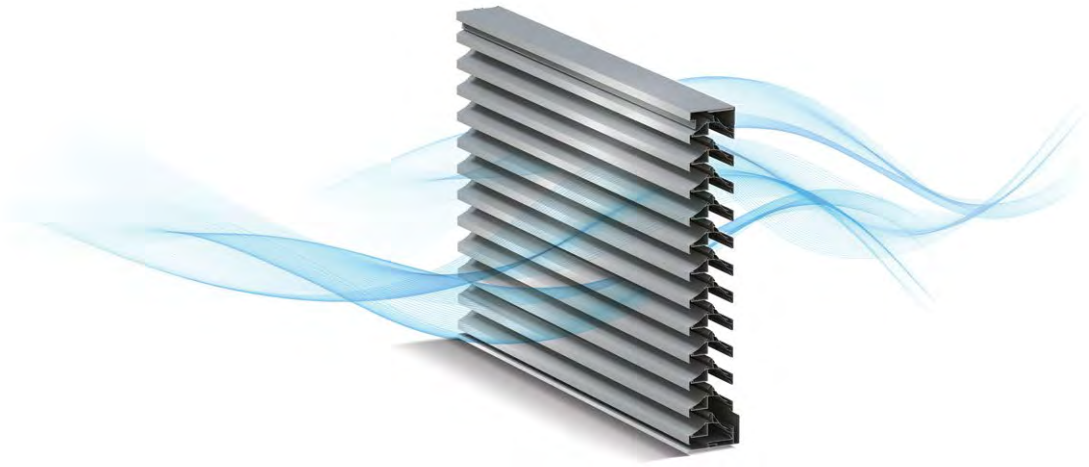

AIRFLOW FUNCTION.

design freedom.

Ventilation isn't a **restriction**. It's an **opportunity**.

Louvers by Construction Specialties let architects do what they've always wanted: defy traditional airflow design conventions to achieve their true vision—without sacrificing performance.

So go ahead. Give your airflow system protection from the elements. Conceal it while still allowing air to flow. Hide mechanical elements in a functional form of the building's own skin.

Indulge your imagination and specify a louver that we don't even manufacture—yet. Construction Specialties will work with you to design a custom louver solution and test it in our exclusive AMCA-certified test chamber. Do all of that—with a full palette of textures, colors and finishes at your disposal.

C/S LOUVERS LET BUILDINGS BREATHE EASY—SO ARCHITECTS CAN, TOO.

Stadium Place
Location: Seattle, Washtington
Architect: Zimmer Gunsul Frasca Architects LLP/SL

The Wave at Stadium Place

When you're on display during every home game, **you want to have your game face on**. The Wave at Stadium Place, a high-rise apartment building that overlooks CenturyLink Field, home of the Seattle Seahawks, gets its cool zippered look from custom-modified Construction Specialties A2097 (see pg. 24) drainable louvers. Featuring closely spaced horizontal blades with built-in reveals at the stack joints, this architectural gridiron **creates a tight, clean profile** all the way up the building. We customized the perimeter framing to fit a curtain wall system of floor-to-ceiling windows that offers an end-zone to end-zone vista of the playing field. We're not sure who has the better view: the building residents who can watch the game from their apartments or the fans who can see the building from the stadium.

One World Trade Center

Sky-high airflow and flawless weather resistance

When architect SOM began work on One World Trade Center, the expectation was clear: Design and build the world's most iconic building.

The technical expectations? Sky-high airflow and flawless weather resistance—in the wind tunnel that is New York City's financial district—and ventilation of a massive HVAC system. Whatever the solution, it had to discreetly blend into a stunning monolithic glass design. **And it wasn't just the client watching—it was the world.**

In the years leading up to its 2014 opening, Construction Specialties engineers worked with SOM, mechanical engineers and the owner to develop a custom, Class A-rated wind-driven, rain-resistant louver system composed of elements from three standard C/S louvers. The new model, now part of our standard product line, was tested in our in-house test facility in conjunction with the specified glass configuration system.

The end result was a high-performing, storm resistant louver system spanning 166,000 square feet. Built from 429 tons of aluminum and held together by nearly a million fasteners, the entire system spans 18 floors—but **if you don't look closely, you might miss it**.

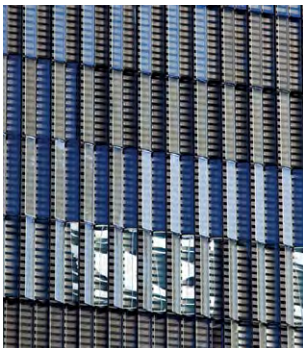

On the building's lower floors, a blast-resistant grille is sandwiched between open glass panels and the louvers, providing its base with security and breathability. One hundred stories up, louvers fulfill the same function, in a different way: set seven feet behind vertical slats of glass and fully exposed to the elements, they function as a water-stopping reverse plenum while still providing high airflow and low pressure drop. And because all eyes are on them, the louvers are angled back 18% and notched at the corners to dovetail with the building's monolithic design.

When world-class design is the expectation, only Construction Specialties could offer **the world-class function to do it justice**. Consider One World Trade Center a symbol of freedom—both American and architectural.

Product RSH-5700
Storm Resistant Fixed Horizontal Louver
See page 20 for details.

One World Trade Center
Location: New York, New York
Architect: David Childs, Daniel Libeskind

Madison Square Garden
Location: New York, New York
Architect: Murray Beynon of BBB Architects, Ontario, Canada.

Madison Square Garden

Renovating an icon

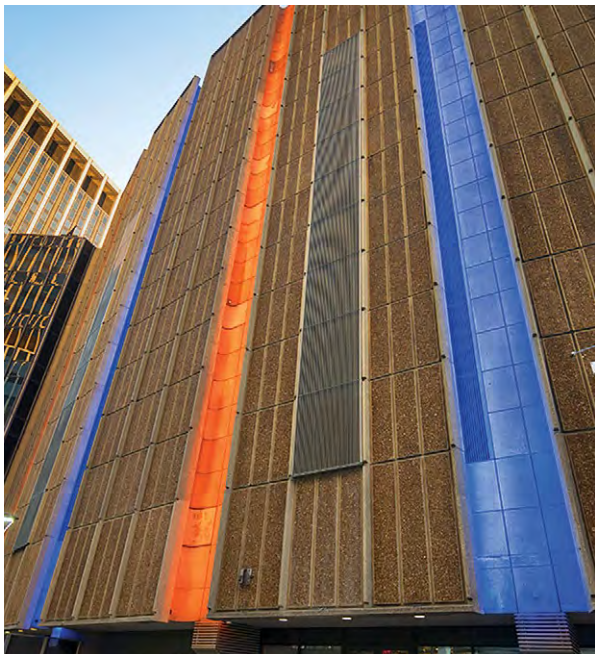

Madison Square Garden is dubbed "the World's Most Famous Arena" for a reason—or several. The 50-year-old drum-shaped sports and entertainment venue sits in the heart of midtown Manhattan, atop North America's busiest railroad station.

But because BBB Architects' $1 billion interior/exterior renovation included enhancements to MSG's HVAC and air-intake systems, it also needed a better airflow solution. For an ordinary arena, an ordinary louver system might have worked just fine. **But they don't call it the World's Most Ordinary Arena.**

Over the course of a three-year facelift, each of MSG's claims to fame represented a new design challenge. The building's trademarked circular shape and fluted alcoves ruled out traditional louvers. Because it is home to two major sports teams, delivery and construction had to be planned around offseason dates.

And delivering product into midtown? **Even a corner bodega owner knows that ain't easy.**

To address these challenges, BBB worked with Construction Specialties to make a curved version of its vertical RSV-5700 Storm Resistant Louver and **test the new form in-house** for airflow and storm resistance. The radiused louvers were then prefabricated and shipped to the customer's Long Island facility to be delivered to the arena as-needed.

Today, these Cradle to Cradle Silver Certified™ custom-built and tested louvers are nestled comfortably in the sides of MSG's "drum" and are outfitted with a dynamic LED lighting system that reflects color schemes associated with each evening's events.

When changing the World's Most Famous Anything, keeping its visual identity is a must. Actually improving upon it? *Fuhgettaboutit*.

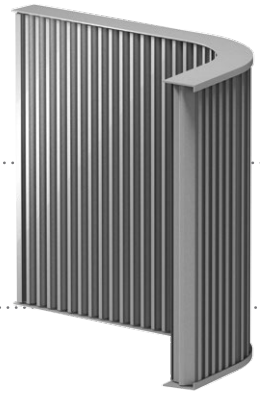

Product Custom RSV-5700
Custom-Curved, Storm Resistant, Fixed Vertical Louver
See page 21 for details.

Defy boring

What do louvers do, anyway? They provide air flow. They prevent water penetration. In short—they work. **But who said that because louvers are functional, they have to be uninteresting?**

Construction Specialties Bold Line Louvers don't just perform beautifully—they are beautiful. And they're anything but boring.

Bold Line adds drama to any louver application by allowing complete blade depth and color freedom while providing high free area and superior water protection. With Bold Line, the louvers **are** the design—not simply a requirement or compromise. Infuse your project with striking textures, vivid colors and artistic patterns. Accentuate façades with **crisp shadow lines, varying blade depths, asymmetrical blade frequencies and staggered blade placement**. And do it all with AMCA-certified performance.

Bold Line is **the most aesthetically flexible louver system we've ever offered**. Each Bold Line blade is finished individually with our 20-year powder coat, so you can specify custom-colored accent blades in multiple colors within a single system. Bold Line also comes in a Storm Resistant model, so its stunning visual features don't come at the expense of function. And Bold Line is AMCA-certified so you can be sure of the high performance you're getting. Think of Bold Line when you're at the conceptual stage of your next design to turn your bold idea into a bold reality.

Product B-7505A
Storm Resistant Louver
See page 21 for details.

Product B-6485A
Standard Louver
See page 25 for details.

San Francisco International Airport

Innovative design takes flight

San Francisco has never worried about being different. So for the new air traffic control tower at San Francisco International Airport, a traditional exterior **simply wouldn't fly**. Neither would a traditional louver.

Slated to open in July 2016, the proposed plane-monitoring turret resembles a futuristic funnel spiraling toward the sky. Of course, this design required custom-curved walls. To complement the panel systems, the architect turned to Construction Specialties, but not for the traditional reasons of superior air flow performance or water resistance. They chose our drainable louvers for their **fine shadow lines**—and our willingness to accommodate.

To form the tower's clean, conical exterior with **textured visual breaks**, Construction Specialties model A2097 louvers were curved into DNA-like helix structures and mounted in 10 perfectly contoured strips.

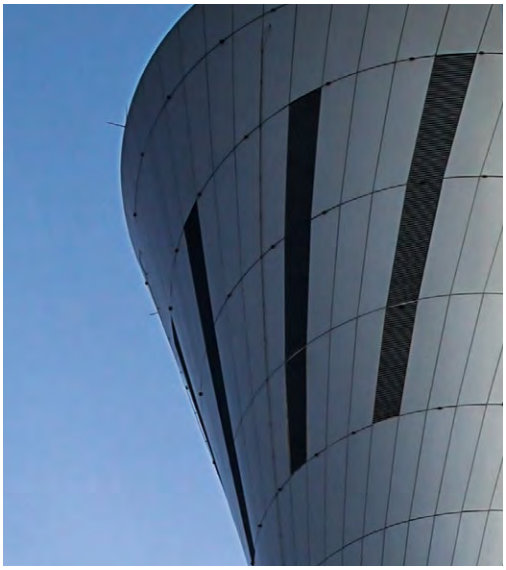

We're not used to being ogled. But having our louvers be among the first sights visitors see when they land in one of America's greatest cities? We could get used to that kind of attention.

Product A2097
Drainable Louver
See page 24 for details.

San Francisco International Airport
Location: San Francisco, California
Architect: Fentress Architects

855 Avenue of the Americas
Location: New York, New York
Architect: SLCE

Our high-performance louvers have gone undercover

While some louvers are all about standing out—others are more about blending in.

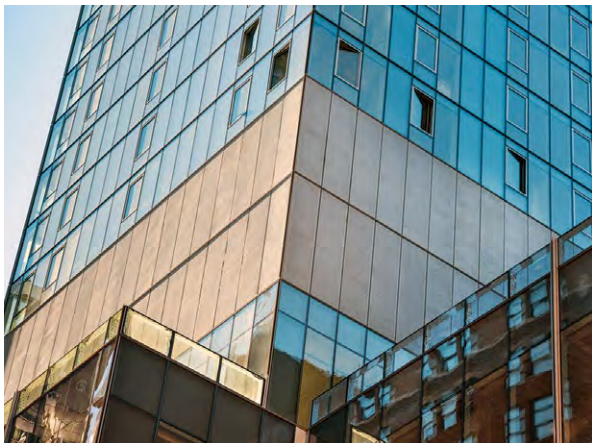

With Construction Specialties Perform Louvers, you get the air movement, security and sight screening performance of our standard louvers, under the cover of a modern perforated aluminum skin. The first and only manufacturer to offer a fully concealed louver system that's been tested in accordance with BSRIA standards for air performance and water penetration, Construction Specialties **turns louvers into a covert operation** that's proven to perform.

Unlike decorative mesh, which can harm mechanical equipment, Perform's perforated skin is engineered to work in harmony with the interior louver blades to provide unparalleled air intake and water protection performance. We even offer a Storm Resistant model.

Perform louvers are available to **integrate into any curtain wall system**. Whether capture, butt-glazed or even a custom directional reveal, Construction Specialties can provide the solution. Perform Louvers mold to your design's character, whether as a dramatic accent or subtle nuance.

Clean Construction. Camouflaged Air Flow.
At 855 Avenue of the Americas in Manhattan, design architect Cook + Fox used Construction Specialties PL-5700 Storm Resistant Perform Louvers to provide an airflow solution that also complements the building's unpretentious glass design through subtle bands at its top and bottom. So when the spirit of design is clean and unembellished, Construction Specialties prefers to go incognito.

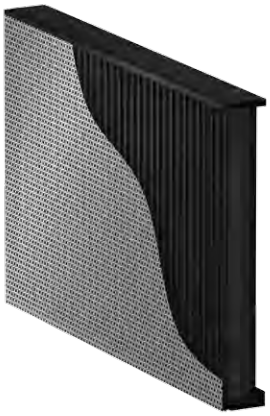

Product PL-5700
Storm Resistant Louver
See page 21 for details.

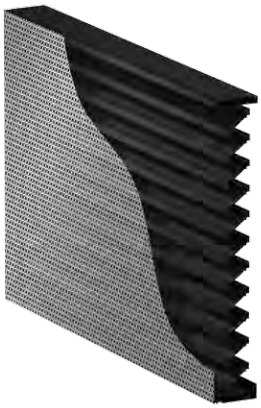

Product PL-4080
Conventional Louver
See page 21 for details.

Weather Considerations: Perform Louvers are not for use in areas where perforations may become blocked or clogged with snow, ice, debris or other occlusions. To maximize performance, prevent property damage and provide a safe environment, Perform Louvers should be inspected and maintained regularly.

Marlins Park
Location: Miami, Florida
Architect: Populous

Marlins Park

Modern design built to withstand nature's wild pitches

When Construction Specialties was invited to become part of an abstract architectural artwork, we were intrigued. When that artwork had to withstand hurricane-force winds, **we were ready to play hardball**.

So, naturally, our contribution to Marlins Park, home field of the Miami Marlins baseball team, is our Miami-Dade County-certified extreme weather, water resistant DC-6174 louvers. What's more is that the evolving complexity of the design—a gleaming modern stadium combining white stucco, steel, aluminum and glass—required our team to make continuous engineering changes and conduct testing to ensure the louvers maintained **specified performance standards**.

The result: An elegant ballpark that combines baseball, art and a panoramic view of downtown Miami and can withstand whatever curveballs the weather can throw at it.

Product DC-6174
Horizontal Louver
See page 22 for details.

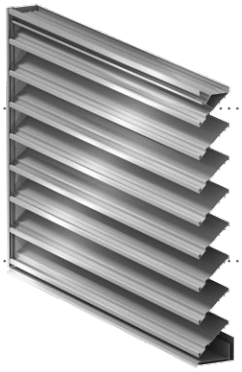

Are new codes holding you prisoner to vertical louvers?

Break free with the **new** AMCA 550-certified **horizontal** louver.

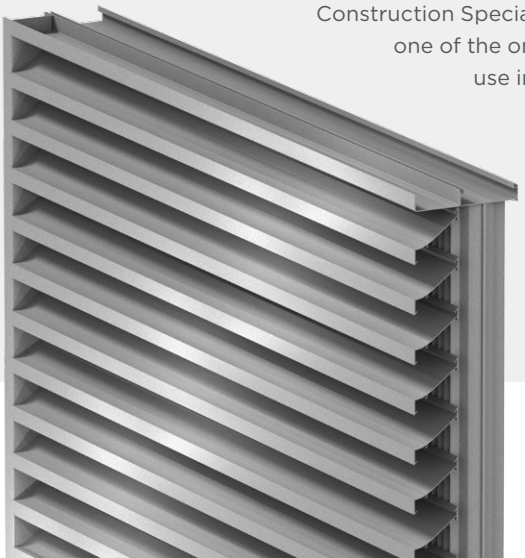

Construction Specialties recently introduced Dade County model DC-9614, one of the only horizontal louvers to pass the AMCA 550 test for use in all U.S. hurricane prone coastal areas. The DC-9614 horizontal louver is A-rated for wind-driven rain and has a high free area (59%), which provides excellent airflow and low pressure drop. It also is AMCA 540-certified for enhanced wind-borne debris resistance.

Specify DC-9614 and never again be locked into vertical louvers in hurricane-prone areas.

DC-9614

University of Michigan
George G. Brown Memorial Laboratories

Taking engineers back to school

When you're one of the top engineering schools in the country, your students and faculty know their stuff. So when you're doing a $47 million renovation of the school, there's a bit more pressure to choose the right construction products.

Architectural firm Integrated Design Solutions chose Construction Specialties RS-7315 Storm Resistant Louver for the exterior of the 220,000 sq. ft. George G. Brown Memorial Laboratories building at the University of Michigan because of its high airflow, excellent water resistance and two-piece blade design.

The RS-7315 louver was installed inside a steel skeleton that used extended horizontal curtain wall covers to convey a bold horizontal expression on the highly visible northern and eastern faces of the building. This louver was specified because high water resistance was needed due to the limited plenum space, and its two-piece blade design allowed the back section of the blade to be removed at blanked-off sections. The result is a **continuous blade appearance** that is aesthetically pleasing yet also cost effective.

Scheduled to be completed in summer 2016, the new building will pass the test of **even the harshest academic critics**.

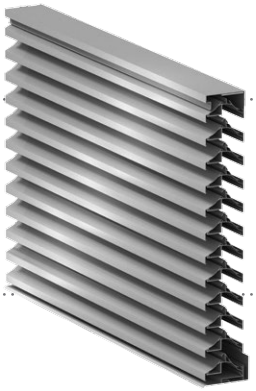

Product RS-7315
7-inch Storm Resistant Fixed Horizontal Louver
See page 20 for details.

University of Michigan
George G. Brown Memorial Laboratories
Location: Ann Arbor, Michigan
Architect: Integrated Design Solutions, LLC

Boeing Delivery Center
Location: Charleston, South Carolina
Architect: Calloway Johnson Moore & West PA

Photo credit ©James West/jwestproductions.com

Boeing Delivery Center

Collaboration helps launch weather-tight aircraft plant

Charming Charleston, South Carolina, is known for quaint cobblestone streets and pre-Civil War houses all situated on the Charleston Harbor, part of 90 miles of Atlantic coastline.

And soon, it also will be known as the home of the new Boeing Delivery Center, a state-of-the-art aircraft paint facility set to open in 2016. The new 256,000-sq. ft. facility is 10 stories high and almost two football fields wide, big enough to house two Boeing 787 Dreamliners simultaneously.

But proximity to beaches and waterways also brings with it the inherent risk of exposure to hurricanes, tropical storms and other extreme weather. Protecting that precious cargo is the seamless integration of Construction Specialties DCH-5704 Extreme Weather Louvers and CENTRIA Formawall® Dimension Series® Panels that creates a **continuous appearance as well as a water-tight solution**.

The more perfect union

Construction Specialties and CENTRIA have formed a unique partnership to share the design, manufacturing and innovation that has made each company a leader in its respective field. This collaboration ensures complete integration of Construction Specialties Louvers into CENTRIA's Formawall® Dimension Series® architectural insulated metal panel systems, Formavue™ Windows and MetalWrap™ insulated composite backup panel systems.

Fully integrated Construction Specialties Louver models are available in a variety of blade depths in both active and inactive louvers and include common joinery elements with CENTRIA wall panels to provide a seamless exterior façade. Construction Specialties Louvers also can be integrated with MetalWrap™, a tested, high R-value insulated composite backup panel system, behind it for occupied areas. The thermally broken wall system acts as an air, water and vapor barrier.

All of our louvers have been tested to both AMCA and BSRIA test standards and are available in fixed, drainable and Storm Resistant models with class-A ratings. And all can be finished in any of CENTRIA's colors.

Whether you choose a CENTRIA Formawall® metal panel system or MetalWrap™ backup panel system for your next project, we think you'll find that Construction Specialties' high-performance integrated louver products will blow the competition away.

CENTRIA

Product DCH-5704
Miami-Dade County-Approved 5-inch Storm Resistant Impact Hurricane Louver
See page 22 for details.

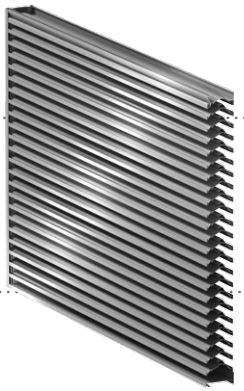

In-house Louver Testing

Creating custom louvers is nothing new Neither is testing them

But doing both? That's our specialty.

Knowing how a louver will perform is critical to ensuring that it will stand up to real-life conditions on the job. Construction Specialties can verify how our products will perform because we have our own onsite test chamber that allows us to test to AMCA louver standards.

Not only has Construction Specialties tested every standard louver we sell, but when you work with us to create a custom louver system, we'll test that, too. So you can be sure that it will meet your specific performance requirements.

Setting the standard

Construction Specialties' onsite test chambers have the ability to replicate the AMCA test standards for air perfomance, still air water penetration and wind-driven rain.

- Our wind generator can simulate the equivalent of a Category 2 hurricane, with wind-driven rain speeds reaching up to 70 mph and producing up to 9 inches of water per hour.
- An intake fan runs constantly to simulate the building's air handling equipment. So if water does get through to the collection chamber, we can make on-the-fly blade adjustments to augment water removal.

By evaluating a louver's resistance to water penetration at incremental speeds, we can prove that it will deliver the air intake and water removal performance you require once it's installed—no matter which Construction Specialties Storm Resistant Louver you pick.

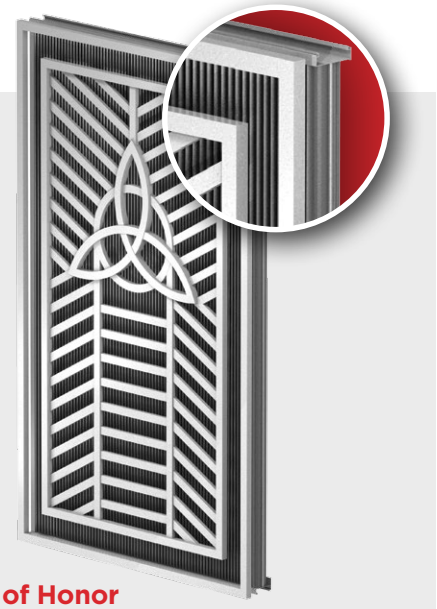

Badge of Honor

When you affix an iconic emblem to the front of a louver, does it affect its performance? New "Celtic" louvers for the University of Notre Dame feature Trinity knots attached to unique louver framing. We didn't need Irish luck to verify this custom model's uncompromised wind-driven rain performance—just our test facility.

AMCA CERTIFIED MODELS*		
RS-2300	DC-5304	A4110-A4130
RS-4605	DCH-5704	A4115-A4135
RS-5300	DCV-5704	A6080-A6085
RS-5605	DC-6174	GS-410
RSH-5700	A4097	GS-610
RSV-5700	A4177	BL-4089
RS-7315	A6097	BL-4179
RS-7705	A6177	BLH-5709
RS-8400	A6155	BLV-5709
RS-8615	B5157	BL-6089
RS-9615	GS-407	BL-6179
B-6485	GS-607	BL-6709
B-7505	A4080-A4085	BL-6809
DC-4174	A4100-A4120	BL-7709
	A4105-A4125	

AMCA LISTED LOUVERS (MEETS AMCA 540 AND/OR AMCA 550)	
DC-6804	DC-9614

*Construction Specialties, Inc. certifies that louver models listed are licensed to bear the AMCA seal. The ratings are based on tests and procedures performed in accordance with AMCA publication 511 and comply with requirements of the AMCA certified ratings program. The AMCA certified rating seal applies to both air performance and water penetration ratings.

Construction Specialties Powder Coating

They're called "finishes" for a reason

Construction Specialties ensures that when you finish a project, it stays that way. Our powder-coat finishes are:

Environmentally responsible

Years ago, we switched from conventional liquid fluoropolymer finishes to our current 20-year powder-coat finish formula. Why? Because, unlike fluoropolymers, our powder-coat finishes contain no hazardous solvents, produce no hazardous waste and release no volatile organic compounds (VOCs).

The result? We've eliminated 60 tons of hazardous solvent waste generated by our plants annually—in fact, there's virtually no waste to end up in landfills. And our powder-coat finish is VOC-free and has received a non-toxic rating from the U.S. Environmental Protection Agency (EPA).

Durable

Our powder-coat finishes are harder, more durable and more scratch-resistant than conventional liquid fluoropolymer and polyester powder-coat finishes, yet they cost the same. Backed by a 20-year warranty against flaking, chipping, peeling and fading, our powder-coat finishes are the most long-lasting available.

Yours, truly

When you specify Construction Specialties' 20-year powder coat, you get a finished product that is truly your design—not one defined by the manufacturer's limitations. We offer 20 standard powder-coat colors, but if your project requires a custom color, we can match it. We also offer Kynar 500® resin-based finishes and Hylar® 5000 high-gloss metallic finishes in 20 colors.

TO ENSURE YOU GET THE POWDER-COAT FINISH THAT STANDS THE TEST OF TIME, SPECIFY:

- 20-year warranty for color integrity to AAMA 2605
- Zero VOCs in manufacture or installation
- Polyester powder or solvent-based fluoropolymer finishes not acceptable
- 100% fluoropolymer powder coat

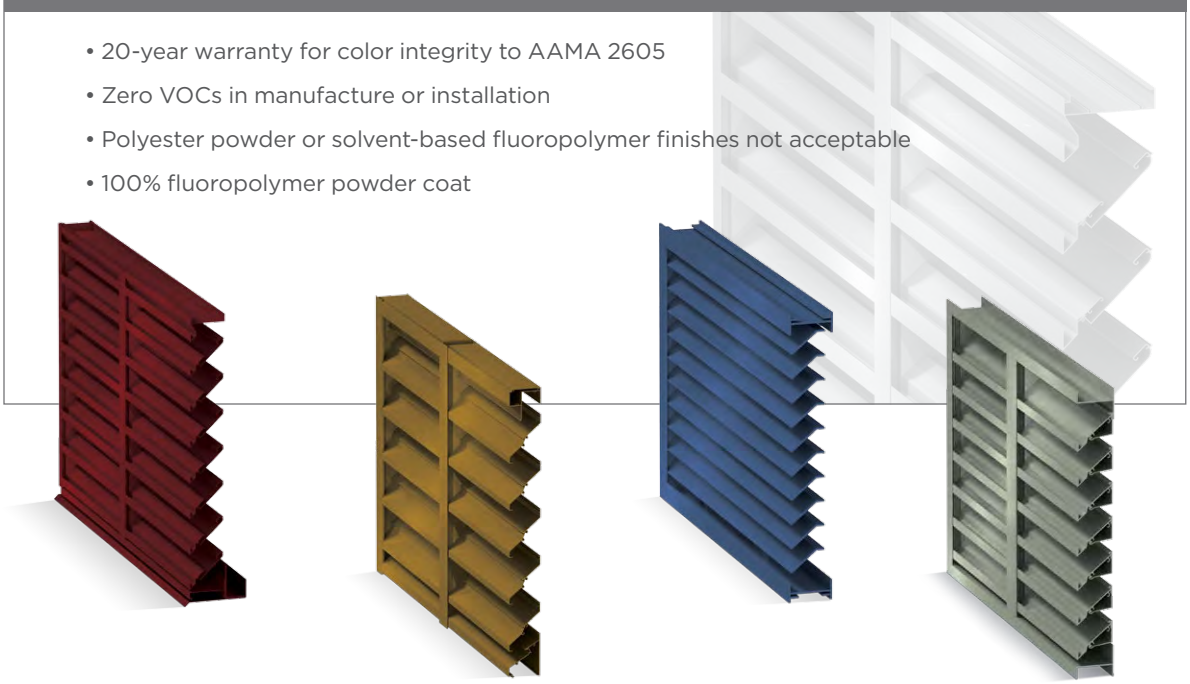

Storm Resistant Louvers

Construction Specialties Storm Resistant Louvers repel up to 100% of wind-driven rain. Available in both horizontal and vertical configurations, they are ideal when you:

- Need 100% resistance to wind-driven rain
- Expect winds as high as 50 mph that drive 8 inches of water per hour
- Must integrate the louver into the building's total design or house them behind architectural grilles, detailing or continuous-line louvers
- Can't use a plenum due to cost or space considerations
- Plan to house sensitive equipment adjacent to the louver system
- Need a louver to integrate with a CENTRIA Formawall® Dimension Series® insulated metal panel system

For design, technical or engineering assistance, contact our design team. Download CAD details and specs for each louver at www.c-sgroup.com/louvers.

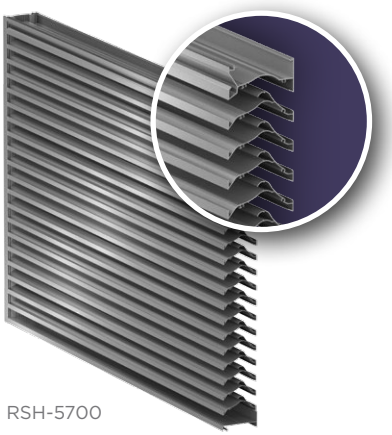

RSH-5700

2- to 5-Inch

LOUVER MODEL	CONFIG.	LOUVER DEPTH	BLADE SPACING	RAIN DEFENSE	FREE AREA		PD@ 900 FPM*
					4'x4'	8'x8'	
RS-5300	Mullion	5″	2¾″	💧💧💧💧💧	47.3%	51.5%	0.32
RSH-5700	Mullion	5″	2″	💧💧💧💧💧💧	45.8%	49.0%	0.13
RS-4300	Mullion	4″	2⅛″	💧💧💧💧	46.9%	50.1%	0.26
RS-2300	Mullion	2″	1½″	💧💧💧💧	41.9%	44.0%	0.51

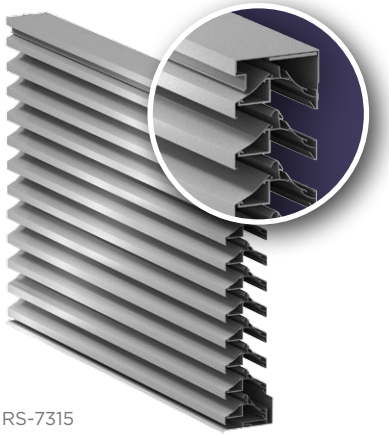

RS-7315

7-Inch

LOUVER MODEL	CONFIG.	LOUVER DEPTH	BLADE SPACING	RAIN DEFENSE	FREE AREA		PD @ 900 FPM*
					4'x4'	8'x8'	
RS-7705	Cont. Line	7″	3⅛″	💧💧💧💧💧💧	50.0%	52.8%	0.25
RS-7315	Recessed Mullion	7″	3⅞″	💧💧💧💧💧	50.6%	54.6%	0.23

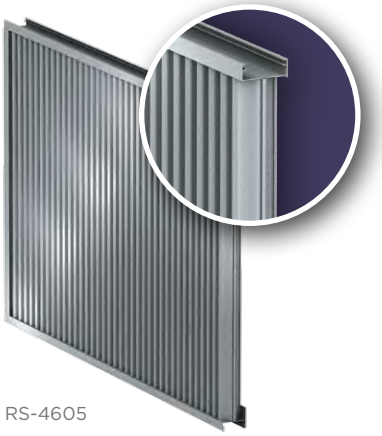

RS-4605

Vertical

LOUVER MODEL	CONFIG.	LOUVER DEPTH	BLADE SPACING	RAIN DEFENSE	FREE AREA		PD @ 900 FPM*
					4'x4'	8'x8'	
RS-4605	Vertical	4″	2″	●●●●●●●	53.3%	56.6%	0.25
RS-5605	Vertical	5″	1″	●●●●●●●	59.1%	62.9%	0.08
RSV-5700	Vertical	5″	2″	●●●●●●●	45.8%	49.0%	0.13

RS-8615

Combination Horizontal/Vertical

LOUVER MODEL	CONFIG.	LOUVER DEPTH	BLADE SPACING	RAIN DEFENSE	FREE AREA		PD @ 900 FPM*
					4'x4'	8'x8'	
RS-8615	Cont. Line	8″	4″	●●●●●●●	53.3%	56.6%	0.37
RS-9615	Cont. Line	9″	4″	●●●●●●●	59.1%	62.9%	0.28

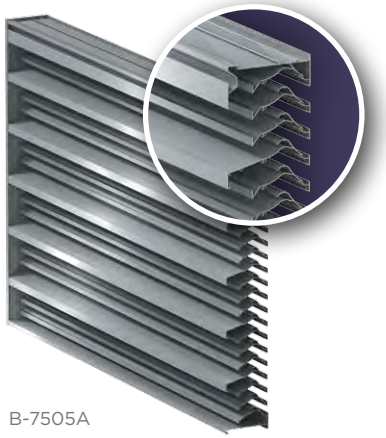

B-7505A

Bold Line

LOUVER MODEL	CONFIG.	LOUVER DEPTH	BLADE SPACING	RAIN DEFENSE	FREE AREA		PD @ 900 FPM*
					4'x4'	8'x8'	
B-7505	Mullion	7″	2″	●●●●●●●	45.8%	49.0%	0.12
B-7505A	Architec-tural Line	7″	2″	●●●●●●●	45.8%	49.0%	0.12

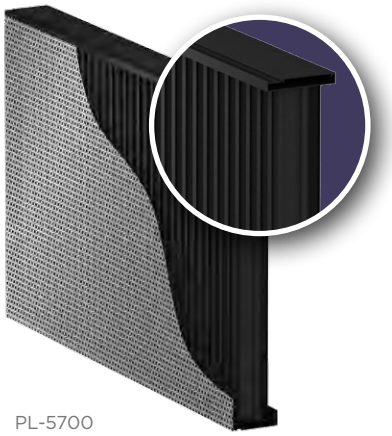

PL-5700

Perform

LOUVER MODEL	CONFIG.	LOUVER DEPTH	BLADE SPACING	RAIN DEFENSE	FREE AREA		PD @ 900 FPM*
					4'x4'	8'x8'	
PL-5700	Custom	7″	2″	●●●●●●●	44.5%	48.3	0.13

*Pressure drop @ feet per minute

Extreme Weather Louvers

Construction Specialties Extreme Weather Louvers are built to withstand extreme hurricane, tornado and tropical storm conditions. They are perfect when your building:

- Needs a louver that has passed the Miami-Dade County impact test
- Requires total envelope protection from hurricanes—including up to 170 PSF wind loads, missile protection and 100% water penetration
- Will be subjected to extreme weather from hurricanes and tropical storms
- Needs a louver to integrate with CENTRIA Formawall® Dimension Series® insulated metal panel system

For design, technical or engineering assistance, contact our design team. Download CAD details and specs for each louver at www.c-sgroup.com/louvers.

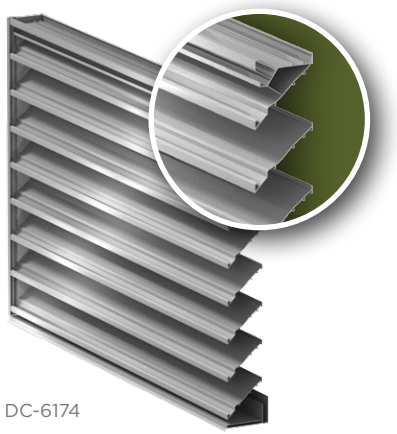

DC-6174

Drainable

LOUVER MODEL	CONFIG.	LOUVER DEPTH	BLADE SPACING	RAIN DEFENSE	FREE AREA		PD @ 900 FPM*
					4'x4'	8'x8'	
DC-4174	Mullion/ Cont. Line	4″	3¼″	💧💧	55.0%	59.5%	0.13
DC-6174	Mullion/ Cont. Line	6″	5¾″	💧💧	57.6%	62.0%	0.14

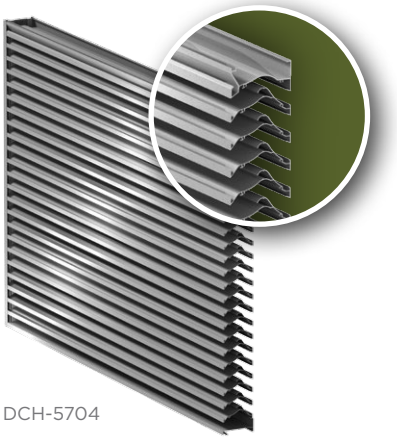

DCH-5704

Storm Resistant

LOUVER MODEL	CONFIG.	LOUVER DEPTH	BLADE SPACING	RAIN DEFENSE	FREE AREA		PD @ 900 FPM*
					4'x4'	8'x8'	
DC-5304	Mullion	5″	2¾″	💧💧💧💧💧	45.3%	51.0%	0.32
DCV-5704	Mullion	5″	2″	💧💧💧💧💧💧💧	45.8%	49.0%	0.13
DCH-5704	Mullion	5″	2″	💧💧💧💧💧💧	45.8%	49.0%	0.13

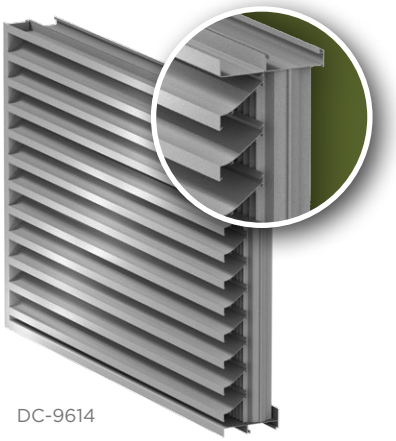

DC-9614

Continuous Storm Resistant AMCA 540/550

LOUVER MODEL	CONFIG.	LOUVER DEPTH	BLADE SPACING	RAIN DEFENSE	FREE AREA		PD @ 900 FPM*
					4'x4'	8'x8'	
DC-9614	Mullion	9″	4″	💧💧💧💧💧💧💧	59.1%	62.9%	0.28

DC-6804

Vertical Storm Resistant AMCA 540/550

LOUVER MODEL	CONFIG.	LOUVER DEPTH	BLADE SPACING	RAIN DEFENSE	FREE AREA		PD @ 900 FPM*
					4'x4'	8'x8'	
DC-6804	Vertical	6″	1⅞″	💧💧💧💧💧💧💧	38.4%	44.3%	0.09

EW-5210

FEMA 361

LOUVER MODEL	CONFIG.	LOUVER DEPTH	BLADE SPACING	RAIN DEFENSE	FREE AREA		PD @ 900 FPM*
					4'x4'	8'x8'	
EW-5210	Horizontal	5″	2″	💧	45.1%	51.3%	0.29

EW-5210 is tested to FEMA 361 and ICC 500 for use in Tornado and Hurricane Safe Rooms.

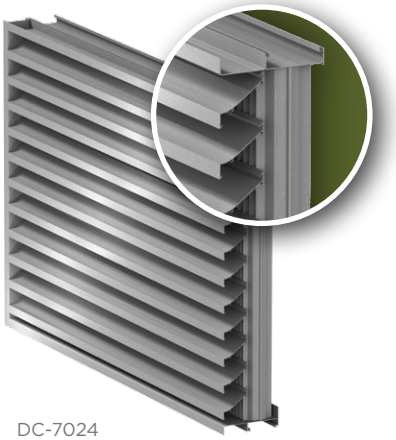

DC-7024

Combination

LOUVER MODEL	CONFIG.	LOUVER DEPTH	BLADE SPACING	RAIN DEFENSE	FREE AREA		PD @ 900 FPM*
					4'x4'	8'x8'	
DC-7044	Cont. Line	11″	4″	💧💧	48.7%	55.1%	0.20
DC-7024	Cont. Line with Rain Rejection Module	11″	4″	💧💧💧💧💧💧💧	36.0%	42.0%	0.25
DC-7034	Cont. Line with Damper Module	11″	4″	💧💧	40.6%	46.9%	0.21

*Pressure drop @ feet per minute

Standard Louvers

All Construction Specialties Standard Louvers are AMCA-certified and designed to provide high free area/high airflow with low pressure drop. They are the right choice when you:

- Need an economical louver
- Don't mind occasional water entry from non-wind-driven rain
- Want a wide variety of blade and frame styles and options
- Need a louver to integrate with a CENTRIA Formawall® Dimension Series® insulated metal panel system

For design, technical or engineering assistance, contact our design team. Download CAD details and specs for each louver at www.c-sgroup.com/louvers.

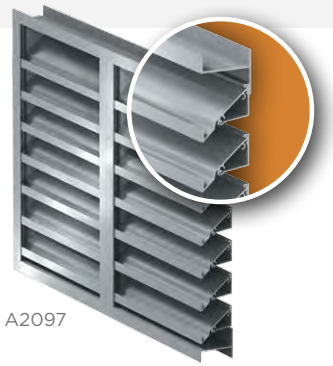

A2097

B5157

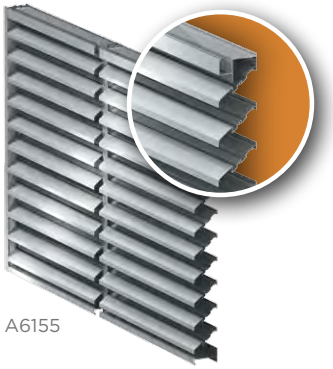

A6155

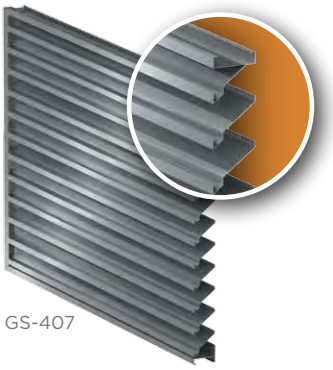

GS-407

Drainable

LOUVER MODEL	CONFIG.	LOUVER DEPTH	BLADE SPACING	RAIN DEFENSE	FREE AREA		PD @ 900 FPM*
					4'x4'	8'x8'	
A2097	Mullion/ Cont. Line	2″	1⅞″	💧	57.0%	59.7%	0.13
A4097	Mullion/ Cont. Line	4″	4″	💧💧	50.4%	58.0%	0.15
A6097	Mullion/ Cont. Line	6″	6″	💧💧	52.1%	60.1%	0.13
A4177	Mullion/ Cont. Line	4″	3¼″	💧💧	55.0%	59.5%	0.13
A6177	Mullion/ Cont. Line	6″	5¾″	💧💧	57.6%	63.2%	0.14

Drainable Sightproof

LOUVER MODEL	CONFIG.	LOUVER DEPTH	BLADE SPACING	RAIN DEFENSE	FREE AREA		PD @ 900 FPM*
					4'x4'	8'x8'	
B5157	Mullion	5″	2½″	💧💧	52.6%	57.8%	0.33

Double Drainable

LOUVER MODEL	CONFIG.	LOUVER DEPTH	BLADE SPACING	RAIN DEFENSE	FREE AREA		PD @ 900 FPM*
					4'x4'	8'x8'	
A6155	Mullion/ Cont. Line	6″	5⅝″	💧💧	48.8%	54.3%	0.12
A6157	Mullion/ Cont. Line	6″	5¾″	💧💧	45.8%	51.7%	0.12

Galvanized Steel/Drainable

LOUVER MODEL	CONFIG.	LOUVER DEPTH	BLADE SPACING	RAIN DEFENSE	FREE AREA		PD @ 900 FPM*
					4'x4'	8'x8'	
GS-407	Mullion	4″	3⅞″	💧💧	52.5%	59.3%	0.13
GS-607	Mullion	6″	5⅜″	💧💧	52.8%	58.6%	0.13

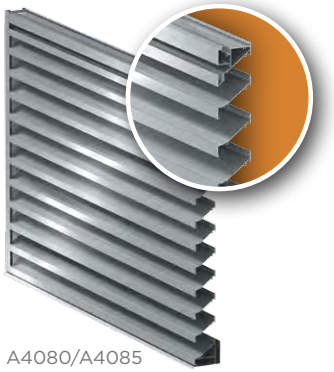

A4080/A4085

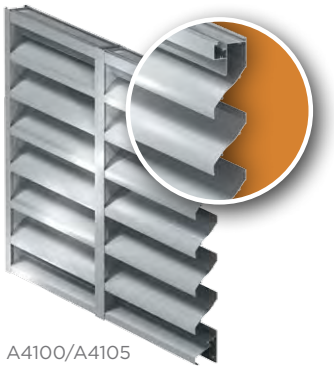

A4100/A4105

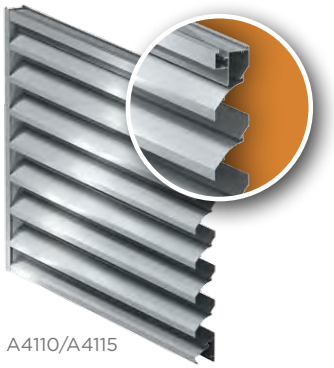

A4110/A4115

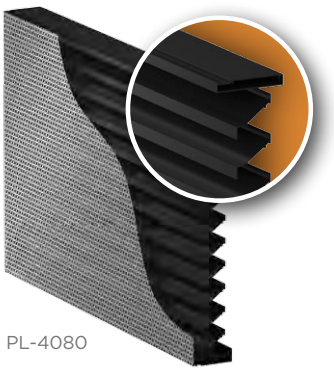

PL-4080

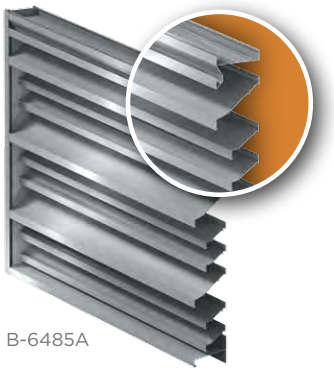

B-6485A

Non-Drainable

LOUVER MODEL	CONFIG.	LOUVER DEPTH	BLADE SPACING	RAIN DEFENSE	FREE AREA		PD @ 900 FPM*
					4'x4'	8'x8'	
A4080/ A4085	Mullion/ Cont. Line	4″	4″	●●	54.0%	59.9%	0.15
A4100/ A4105	Mullion/ Cont. Line	4″	6″	●●	46.0%	52.3%	0.16
A4110/ A4115	Mullion/ Cont. Line	4″	6″	●●	46.6%	52.7%	0.17
4180	Mullion/ Cont. Line	4″	4⅛″	●●	25.6%	28.8%	0.35
A6080/ A6085	Mullion/ Cont. Line	6″	6″	●●	51.5%	58.7%	0.13
A6100/ A6105	Mullion/ Cont. Line	6″	6 13/16″	●●	48.0%	54.4%	0.15
A6110/ A6115	Mullion/ Cont. Line	6″	6 13/16″	●●	48.0%	54.4%	0.15

Galvanized Steel/Non-Drainable

LOUVER MODEL	CONFIG.	LOUVER DEPTH	BLADE SPACING	RAIN DEFENSE	FREE AREA		PD @ 900 FPM*
					4'x4'	8'x8'	
GS-410	Mullion/ Cont. Line	4″	4½″	●●	42.5%	48.4%	0.12
GS-610	Mullion/ Cont. Line	6″	6¼″	●●	43.8%	50.4%	0.11

Perform

LOUVER MODEL	CONFIG.	LOUVER DEPTH	BLADE SPACING	RAIN DEFENSE	FREE AREA		PD @ 900 FPM*
					4'x4'	8'x8'	
PL-4080	Custom	7″	4″	●●●	46.8%	48.3%	0.16

Bold Line

LOUVER MODEL	CONFIG.	LOUVER DEPTH	BLADE SPACING	RAIN DEFENSE	FREE AREA		PD @ 900 FPM*
					4'x4'	8'x8'	
B-6485M	Mullion	6″	4″	●	52.9%	58.7%	0.16
B-6485A	Architec-tural Line	6″	4″	●	52.9%	58.7%	0.16

*Pressure drop @ feet per minute

Blast Resistant Louvers

Construction Specialties Blast Resistant Louvers provide blast protection, air movement and rain defense all rolled into one. They are the right choice for buildings that:

- Are particularly vulnerable to explosive threats, such as government buildings, data centers and power plants
- Must withstand blasts up to 12 PSI
- Must meet the government requirement that louvers must remain in their frame and anchored to resist a blast and prevent it from becoming a projectile

For design, technical or engineering assistance, contact our design team. Download CAD details and specs for each louver at www.c-sgroup.com/louvers.

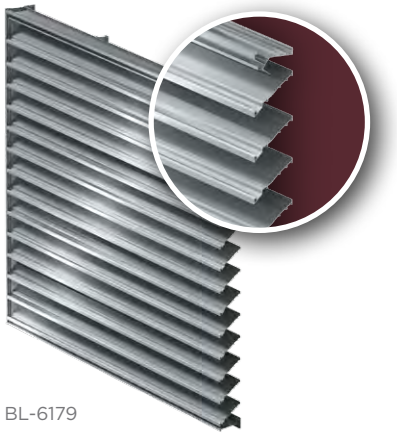

BL-6179

Drainable

LOUVER MODEL	CONFIG.	LOUVER DEPTH	BLADE SPACING	RAIN DEFENSE	FREE AREA		PD @ 900 FPM*
					4'x4'	8'x8'	
BL-6179	Mullion/ Cont. Line	6″	5¾″	●●	57.6%	63.2%	0.14
BL-4179	Mullion/ Cont. Line	4″	3¼″	●●	55.0%	59.5%	0.13

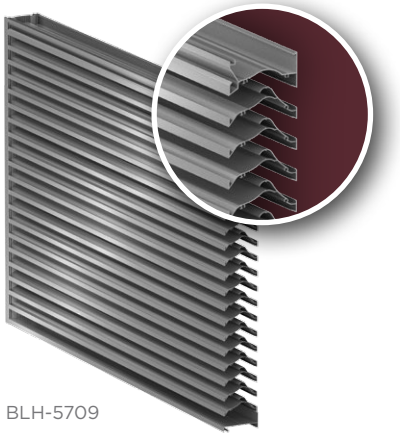

BLH-5709

Storm Resistant

LOUVER MODEL	CONFIG.	LOUVER DEPTH	BLADE SPACING	RAIN DEFENSE	FREE AREA		PD @ 900 FPM*
					4'x4'	8'x8'	
BLH-5709	Mullion	5″	2″	●●●●●●	45.8%	49.0%	0.13

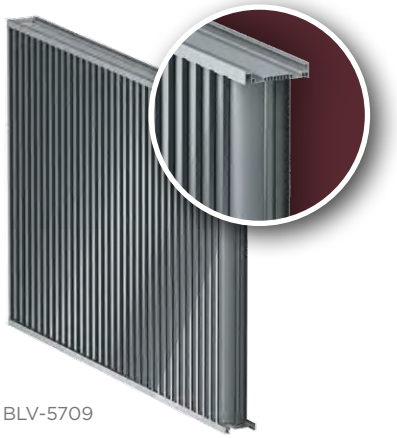

BLV-5709

Vertical Storm Resistant

LOUVER MODEL	CONFIG.	LOUVER DEPTH	BLADE SPACING	RAIN DEFENSE	FREE AREA		PD @ 900 FPM*
					4'x4'	8'x8'	
BLV-5709	Vertical	5″	2″	●●●●●●●	45.8%	49.0%	0.13

Construction Specialties Thinline Louvers offer a shallow, low-profile blade design, much like a grille or a grate. They are the right choice when you:

- Need high airflow
- Want to cover small areas, such as individual HVAC vents
- Don't require water performance
- Desire a uniform, tightly spaced louver that blends in with other exterior materials

For design, technical or engineering assistance, contact our design team. Download CAD details and specs for each louver at www.c-sgroup.com/louvers.

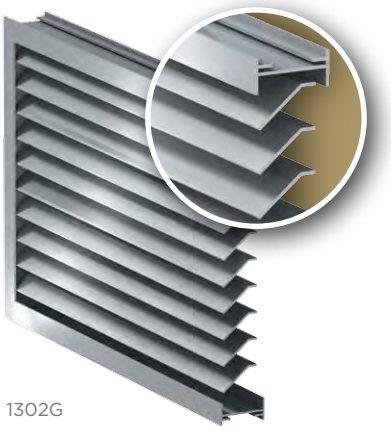

1302G

Thinline Louvers

LOUVER MODEL	CONFIG.	LOUVER DEPTH	BLADE SPACING	RAIN DEFENSE	FREE AREA		PD @ 900 FPM*
					4'x4'	8'x8'	
1302G	Cont. Line	1⅜"	¾"	💧	59.8%	62.7%	0.09
RS-2300	Storm Resistant	2"	1½"	💧💧💧💧	42.1%	44.4%	0.51
1282	Cont. Line	1⅜"	1⅜"	💧	39.3%	40.3%	0.75
2282	Cont. Line	2"	1⅞"	💧	39.1%	41.4%	0.64
2252	Cont. Line	2¼"	3"	💧	35.2%	37.8%	0.12
1322	Cont. Line	1⅜"	1¾"	💧	32.2%	33.3%	0.10
2322	Cont. Line	2"	2½"	💧	39.3%	41.2%	0.13

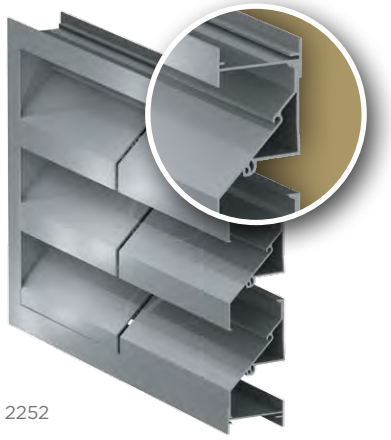

2252

Thinline Louvers

LOUVER MODEL	CONFIG.	LOUVER DEPTH	BLADE SPACING	RAIN DEFENSE	FREE AREA		PD @ 900 FPM*
					4'x4'	8'x8'	
0292	Cont. Line	1"	1¼"	💧	63.4%	64.7%	0.09
1242	Cont. Line	1⅜"	1⅛"	💧	45.9%	47.3%	0.07
2272	Cont. Line	2"	1½"	💧	55.2%	58.0%	0.10

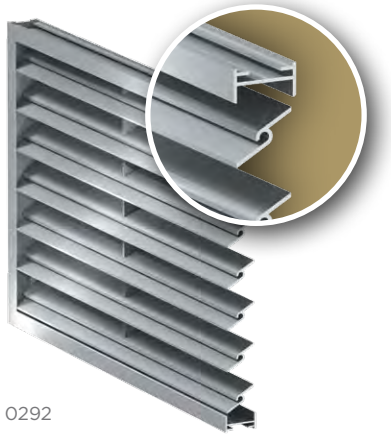

0292

*Pressure drop @ feet per minute

Acoustical Louvers

Construction Specialties Acoustical Louvers offer good water penetration protection and airflow performance with excellent sound attenuation for parking garages, tunnels, mechanical rooms, cooling towers or any application where ventilation is needed. Choose an Acoustical Louver when you:

- Need to minimize sound levels that escape from exterior or interior walls
- Require maximum noise reduction—specify model A-12350
- Need maximum free area and noise reduction—specify model A-8890 or A-8860

For design, technical or engineering assistance, contact our design team. Download CAD details and specs for each louver at www.c-sgroup.com/louvers.

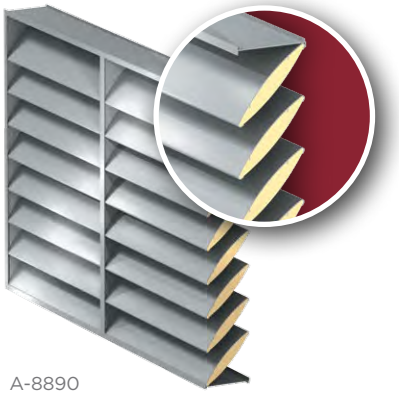

A-8890

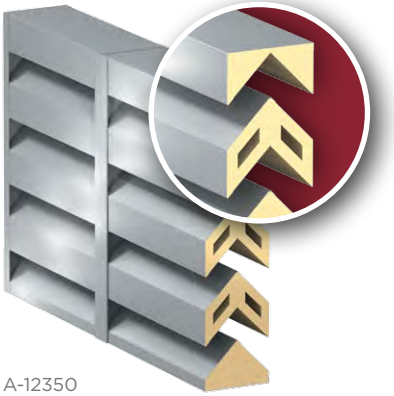

A-12350

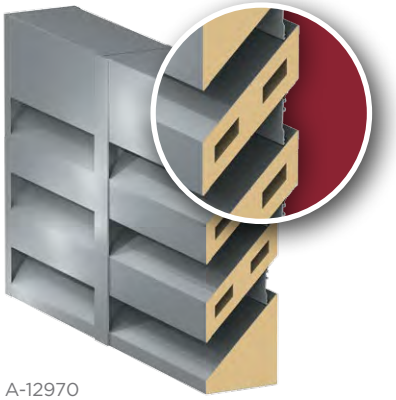

A-12970

Acoustical

LOUVER MODEL	CONFIG.	LOUVER DEPTH	BLADE SPACING	RAIN DEFENSE	FREE AREA		PD @ 900 FPM*
					4'x4'	8'x8'	
A-6370	Mullion	6″	10″	●●	21.6%	25.4%	0.09
A-8370	Mullion	8″	8½″	●●	23.0%	30.0%	0.07
A-8860	Mullion	9½″	6″	●●	28.5%	33.9%	0.06
A-8890	Mullion	8″	6″	●●	28.5%	33.9%	0.06
A-12350	Mullion	12″	11¾″	●●	23.3%	32.4%	0.17
A-12360	Mullion	12″	15″	●●	24.3%	31.7%	0.09
A-12370	Mullion	12″	12″	●●	22.0%	26.6%	0.07

Operating Acoustical

LOUVER MODEL	CONFIG.	LOUVER DEPTH	BLADE SPACING	RAIN DEFENSE	FREE AREA		PD @ 900 FPM*
					4'x4'	8'x8'	
A-12970	Mullion	12″	12″	●●	22.0%	26.6%	0.06
A-8860	Mullion	9½″	6″	●●	28.5%	33.9%	0.06

Operating Louvers

Construction Specialties Operating Louvers are adjustable and can be opened and closed to control airflow by an actuator device. Perfect for mechanicals rooms with emergency generators, choose them when you:

- Need the ability to close the louvers to keep weather out
- Need the ability to open the louvers to let exhaust out or facilitate air intake
- Must provide security from external intrusion
- Must be able to close the louver, but have a fixed blade appearance—specify model 6917

For design, technical or engineering assistance, contact our design team. Download CAD details and specs for each louver at www.c-sgroup.com/louvers.

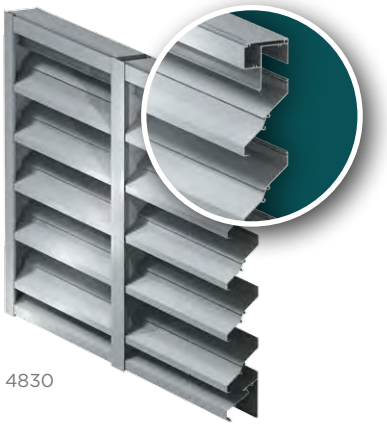

4830

Operating

LOUVER MODEL	CONFIG.	LOUVER DEPTH	BLADE SPACING	RAIN DEFENSE	FREE AREA		PD @ 900 FPM*
					4'x4'	8'x8'	
4830	Mullion	4″	5⅝″	●●	33.1%	37.1%	0.12
6870	Mullion	6″	5⅝″	●●	53.2%	63.5%	0.10

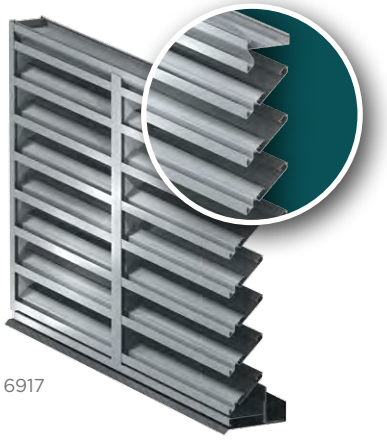

6917

Drainable Operating

LOUVER MODEL	CONFIG.	LOUVER DEPTH	BLADE SPACING	RAIN DEFENSE	FREE AREA		PD @ 900 FPM*
					4'x4'	8'x8'	
6917	Mullion	6″	6³⁄₁₆″	●●	40.7%	49.3%	0.18

*Pressure drop @ feet per minute

Why Architectural Louvers from Construction Specialties?

Nearly 60 years ago Construction Specialties invented the industry's first extruded aluminum louver. Since then, we've been responsible for every significant advancement in building-ventilation technology, including the first Storm Resistant, Perform and Bold Line louver.

When air intake and water removal are your top priorities, accept no substitutes—specify Construction Specialties Architectural Louvers.

Compare Construction Specialties Architectural Louvers with other suppliers on these additional quality measures:

- **Performance**—All of our louvers are tested to AMCA Standards to simulate real-world conditions in our own test facility so you'll know that they'll meet the performance standards for your project.
- **Capability**—We have engineering experience and resources to undertake the largest, most complex projects.
- **Integration**—Our unique partnership with CENTRIA enables you to integrate our louvers seamlessly with CENTRIA metal wall systems, and we can create custom framework to fit your specific curtain wall system.
- **Finishes**—We paint the entire louver—not just the front—using our 20-year guaranteed powder coat, Kynar 500® and Hylar® 5000 high-gloss metallic finishes according to your specifications. Choose from our **standard colors** or custom-match a color you're already using.
- **Estimates**—Construction Specialties **bids responsibly**, so our estimate will include everything you'll need for the installation—no surprises.
- **Production**—Our lead times are the best in the industry.
- **Local tech support**—We have an extensive network of representatives across the United States, with one in every state, and Canada, so we'll come to you for any **design, technical, engineering or installation support necessary**.

Construction Specialties is a leader in architectural specialty products, including Acrovyn® by Design, Acrovyn® Wall and Door Protection, Pedisystems® Entrance Flooring, Floormations, Expansion Joint Covers, Cubicle Track and Curtains, Smoke and Explosion Venting Systems, Architectural Grilles and Sun Controls.

Contact us toll free at **800-631-7379** to talk to our engineers, who will help you select the right grille and anchoring system for your next project.

Construction Specialties™

49 Meeker Avenue
Cranford, New Jersey 07016
USA 908-272-5200

895 Lakefront Promenade
Mississauga, Ontario L5E 2C2
Canada 905-274-3611

Download Our New CS Project Locator App

Available on the App Store

Google play

©2016 Construction Specialties, Inc.