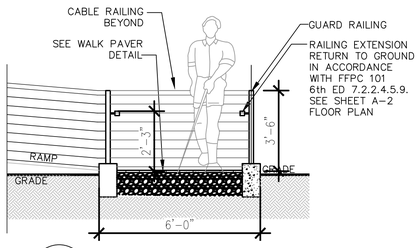

D A-3 WALK SECTION
SCALE: 3/8"=1'-0"

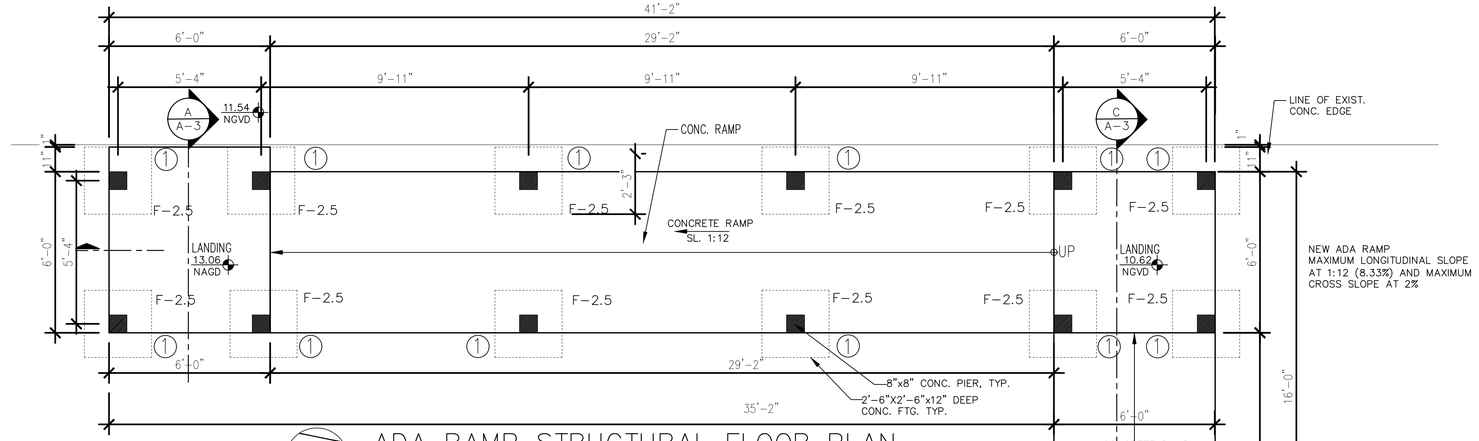

ADA RAMP STRUCTURAL FLOOR PLAN
SCALE: 3/8"=1'-0"

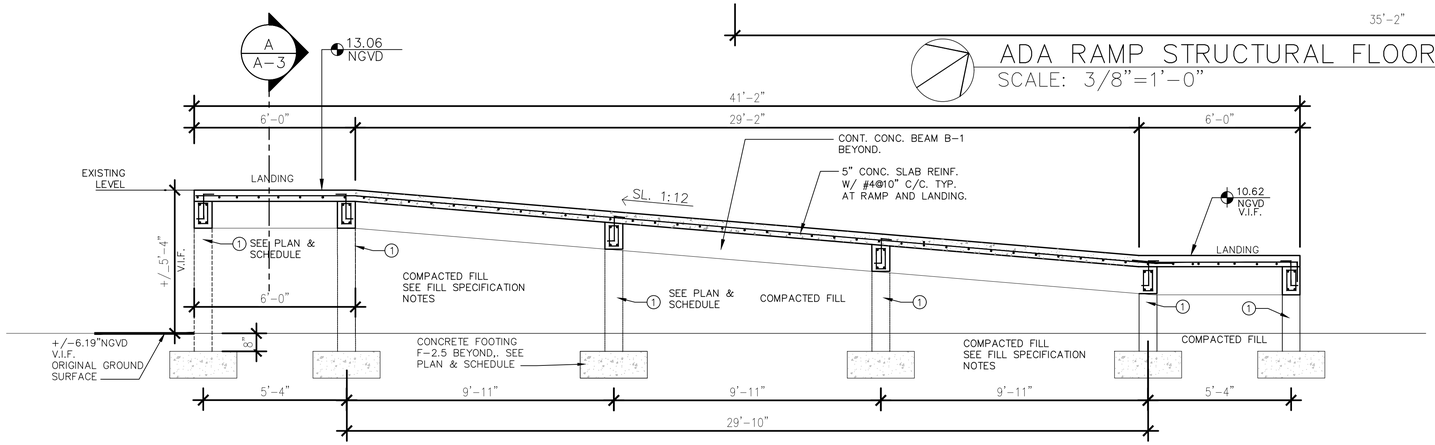

B A-3 RAMP SECTION
SCALE: 3/8"=1'-0"

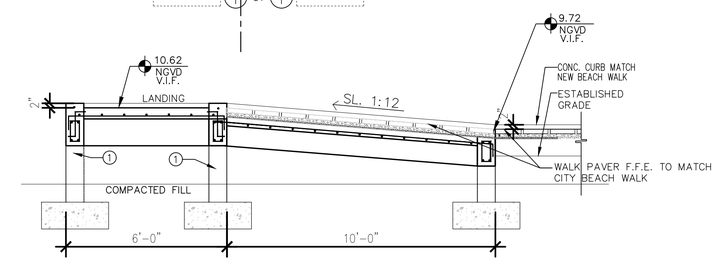

C A-3 RAMP SECTION
SCALE: 3/8"=1'-0"

GRADE BEAM SCHEDULE						
MARK	TOP OF BEAM ELEVATION	SIZE (IN.)	REINFORCING BOTTOM	REINFORCING TOP	STIRRUPS	REMARKS
B-1	VARIES	8"X12"	2 # 5	2 # 5 *	3 ☐ @ 4" O.C.	*CONT.

FOOTING SCHEDULE			
MARK	SIZE	REINFORCEMENT	REMARKS
F-2.5	2'-6"X2'-6"X12"	3#5 T @ BOTT. EA. WAY	

CONCREE COLUMN SCHEDULE				
MARK	SIZE	REINFORCEMENT VERT.	REINFORCEMENT TIES	REMARKS
1	8"X8"	4#5	#2 @8"C/C	

FILL MATERIAL MEETS THE SPECIFICATYIONS/ CRITERIA OF SUBSECTION 62B-33.005 (7) F.A.C.

FILL SPECIFICATION NOTES

(7) ONLY BEACH COMPATIBLE FILL SHALL BE PLACED ON THE BEACH IN ANY ASSOCIATED DUNE SYSTEM. ALL FILL MATERIAL PLACED SEAWARD OF THE CCCL SHALL BE SAND WHICH IS SIMILAR TO THAT ALREADY EXISTING IN THE SAME FIXED COASTAL CELL IN COLORATION, GRAIN SIZE, AND COMPOSITION. BEACH COMPATIBLE FILL IS MATERIAL THAT MAINTAINS THE GENERAL CHARACTER AND FUNCTIONALITY OF THE MATERIAL OCCURRING ON THE BEACH AND IN THE ADJACENT DUNE AND COASTAL SYSTEM. SUCH MATERIAL SHALL BE PREDOMINATELY OF CARBONATE, QUARTZ OR SIMILAR MATERIAL WITH A PARTICULAR SIZE DISTRIBUTION RANGING BETWEEN 0.062 mm (4.0) AND 4.76mm (-2.25) (CLASSIFIED AS SAND BY EITHER THE UNIFIED SOILS OR THE WENTWORTH CLASSIFICATION) SHALL BE SIMILAR IN COLOR AND GRAIN SIZE DISTRIBUTION (SAND GRAIN FREQUENCY, MEAN AND MEDIAN GRAIN SIZE AND SORTING COEFFICIENT) TO THE MATERIAL IN THE EXISTING COASTAL SYSTEM AT THE PLACEMENT AREA AND SHALL NOT CONTAIN:
(A)GREATER THAN 5 PERCENT, BY WEIGHT, SILT, CLAY OR COLLOIDS PASSING THE #230 SIEVE (4.0);
B) GREATER THAN 5 PERCENT, BY WEIGHT, FINE GRAVEL RETAINED ON THE #4 SIEVE (-2.25);
C)COARSE GRAVEL, COBBLES OR MATERIAL RETAINED ON THE 3/4 INCH SIEVE IN A PERCENTAGE OF SIZE GREATER THAN FOUND AT THE PLACEMENT AREA;
D)CONSTRUCTION DEBRIS, CLAY BALLS OR FOREIGN MATTER; OR;
E)MATERIAL THAT RESULTS IN CEMENTATION OF THE BEACH.

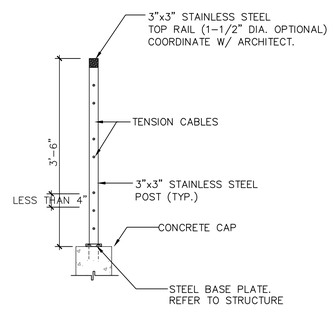

RAILING ALTERNATE
SCALE: 3/4"=1'-0"

REFER TO MANUF. SPECS & SHOP DRAWING BY AMERICAN RAILING SYSTEM, INC. OR CRL LAURENCE

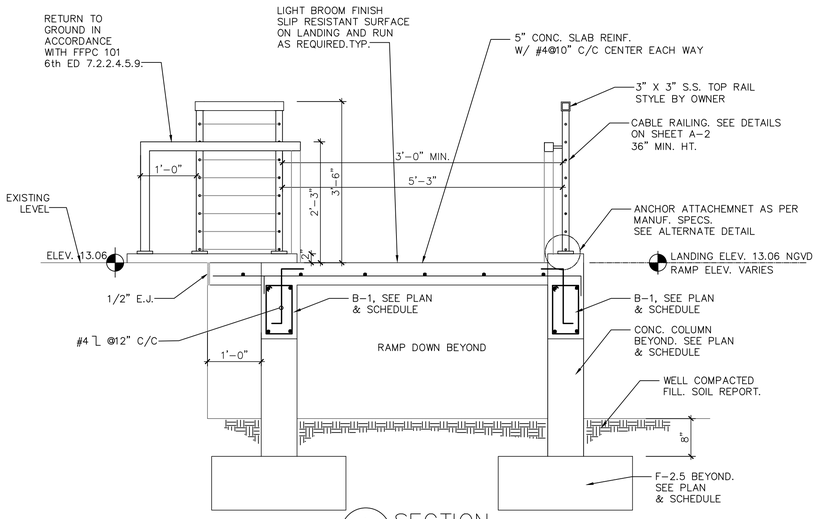

A A-3 SECTION
SCALE: 3/4"=1'-0"

SOIL STATEMENT:

1. FOUNDATION:

BASED ON THE SUBSURFACE EXPLORATION REPORT MADE BY DYNATECH ENGINEERING CORP ON SEPTEMBER 25, 2018, THE FOUNDATIONS HAVE BEEN DESIGNED TO BE SUPPORTED BY SHALOW FOUNDATIONS, AS PER ALTERNATIVE I, THE SOIL BEARING CAPACITY: 2,500 psf

CONTRACTOR MUST OBTAIN A COPY OF SUBSURFACE EXPLORATION REPORT AND MUST FOLLOW IS ENGINEERING EXAL.

GROUND FLOOR SUPERIMPOSED LOADS
DL: 20 PSF
LL: 100 PSF (RAMPS)

NOTES:

1. TOP OF EXISTING SLAB EL. VARIES
2. CONTRACTOR MUST COORDINATE ALL DIMENSIONS IN THE FIELD AND WITH ARCHITECTURAL DRAWINGS.
3. CONTRACTOR MUST VERIFY ALL CONDITIONS IN THE FIELD AND MUST NOTIFY ARCHITECT OF ANY DISCREPANCIES.
4. CONTRACTOR MUST NOTIFY IN WRITING OF ANY UNFORESEEN BEARING CONDITION ENCOUNTERED AND NOT SPECIFIED IN THESE PLANS PRIOR TO COMMENCING OF WORK.

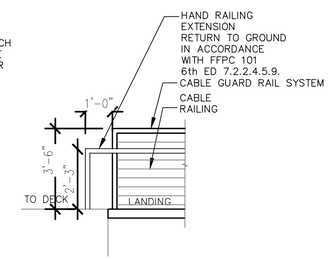

RAILING EXTENSION @ TOP DECK
SCALE: 3/8"=1'-0"

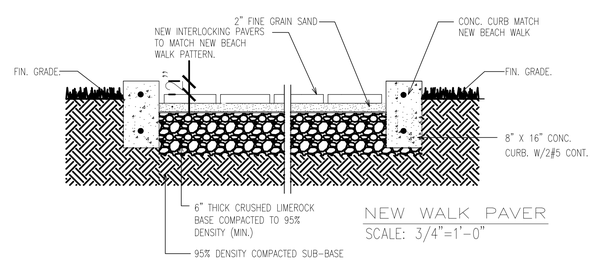

NEW WALK PAVER
SCALE: 3/4"=1'-0"

02-08-2021 FOOTING & SECTION & DETAILS

DATE	SYM	REVISION/ RECORD	BY
	1		
	2		
	3		
	4		
	5		

PROJECT NAME: BEST WESTERN PLUS HOTEL
NEW ADA RAMP CONNECTION TO CITY BEACH WALK
OWNER: LUCERNE INVESTMENT LLC
ADDRESS: 4101 COLLINS AVE. MIAMI BEACH, 33139
PHONE: 305 538 6301

IAA DESIGN ASSOCIATES PA
Ismael Allendes AR 94998
Architecture interior Design Planning
8280 sw 139 th terrace - miami, fl. 33158
phone:(305)322-9097e-mail:ismaa2000@aol.com

JOSE ISMAEL ALLENDES
Digitally signed by JOSE ISMAEL ALLENDES
Date: 2021.02.03 21:42:10 -05'00'
SEAL

AA-26001915

A-3
SHEET 3 OF 4

SCALE:	AS SHOWN
DATE:082620	DRAWN:AR

Designs are subject to modification or change as required by actual measurements, standard industry practices in light of existing structural and other conditions, applicable bldg. codes, and the law. These plans are and shall remain the property of Mr Allendes and shall not be sold or reproduced without his prior written consent. Mr-Allendes shall be notified of any changes req'd by actual measurements, etc. as aforesaid prior to submission of any phases for bid or construction.