BEST WESTERN PLUS ATLANTIC BEACH RESORT
4101 COLLINS AVE, MIAMI BEACH, FLORIDA

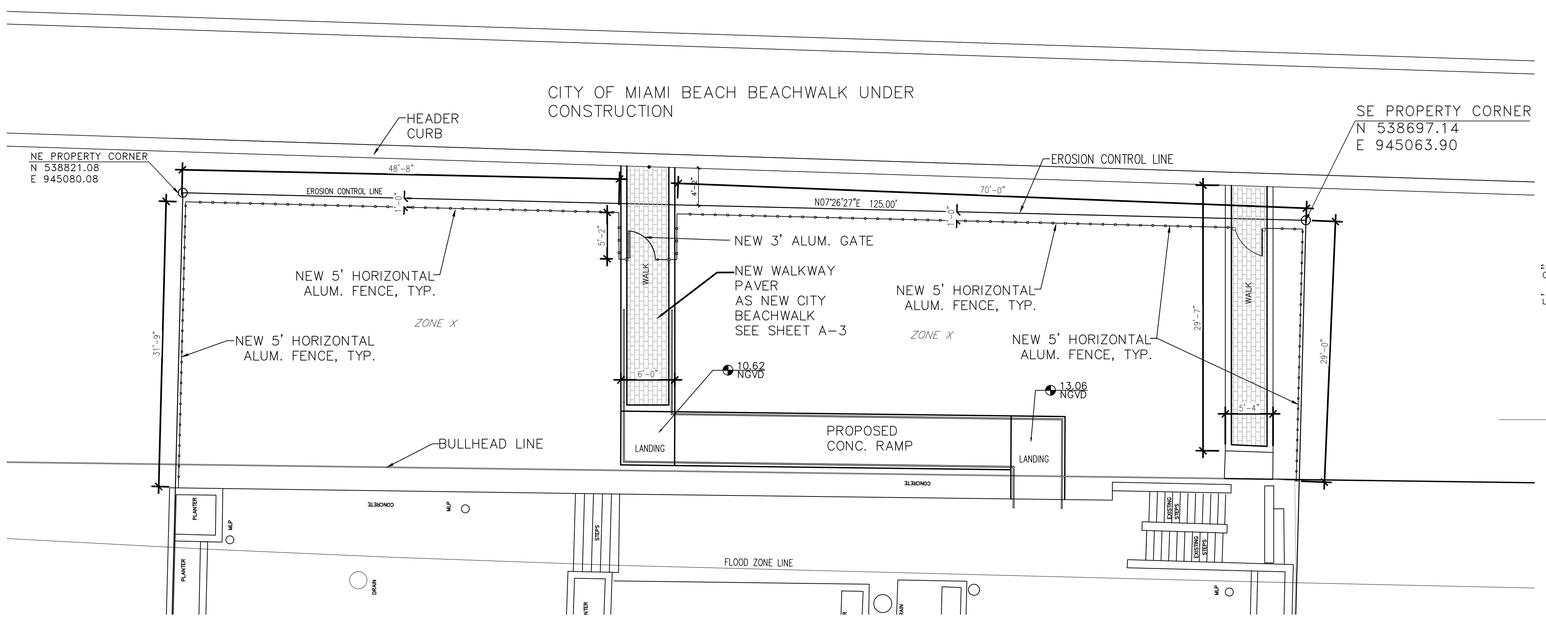

NEW HORIZONTAL ALUMINUM FENCE PLAN
SCALE: 1/8"=1'-0"

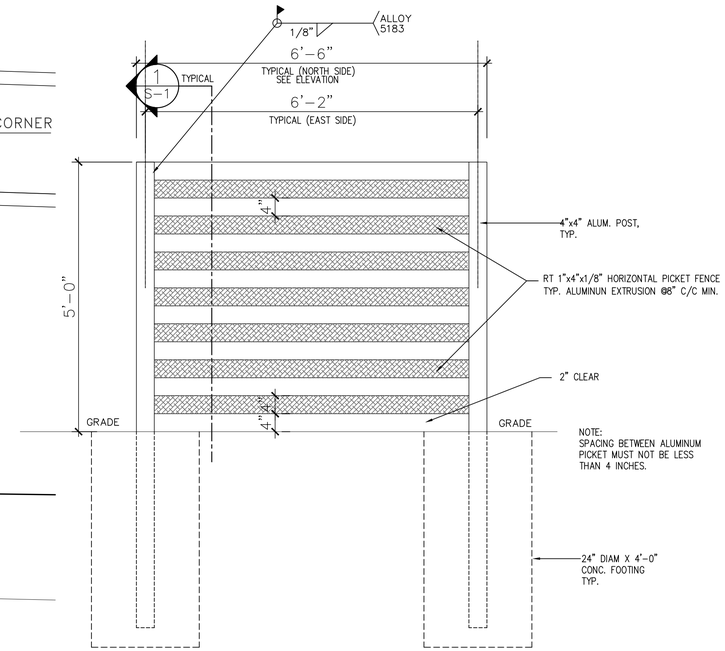

ALUM. FENCE ELEVATION TYPICAL
2 / S-1

SCALE: 1/2"= 1'-0"

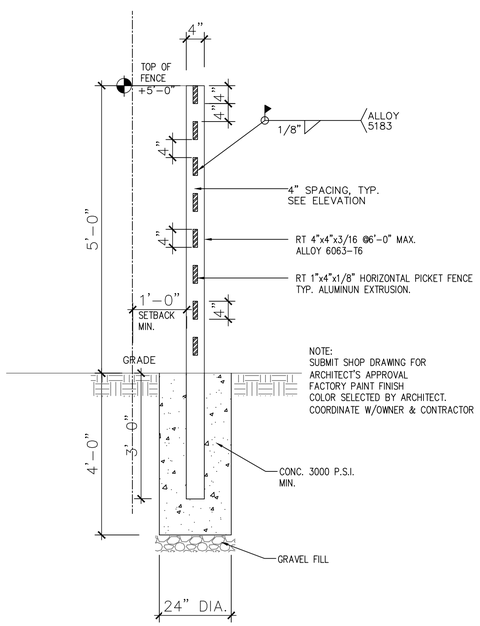

SECTION 1/S-1
TYP. FOUNDATION
SCALE: 3/4"= 1'-0"

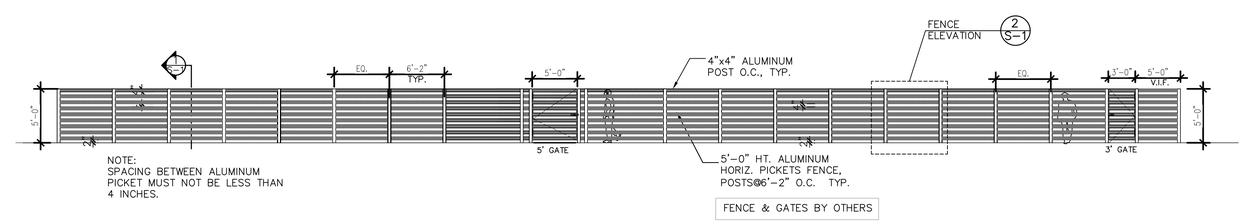

NEW ALUM. FENCE EAST ELEVATION
SCALE: 1/8"=1'-0"

LEGEND

NEW HORIZONTAL ALUM. FENCE AS SHOWN

NEW FENCE LENGHT
(TOTAL LENGHT) 190'-0"

FENCE BY OTHERS

02-08-2021 FENCE & SECTION & DETAILS

DATE	SYM	REVISION/ RECORD	BY
	/1		
	/2		
	/3		
	/4		
	/5		

PROJECT NAME: BEST WESTERN PLUS HOTEL
NEW ADA RAMP CONNECTION TO CITY BEACH WALK

OWNER: LUCERNE INVESTMENT LLC

ADDRESS: 4101 COLLINS AVE.
MIAMI BEACH, 33139

PHONE: 305 538 6301

IAA DESIGN ASSOCIATES PA
Ismael Allendes AR 94998
Architecture interior Design Planning
8280 sw 139 th terrace - miami, fl. 33158
phone:(305)322-9097e-mail:ismaa2000@aol.com

JOSE ISMAEL ALLENDES
Digitally signed by JOSE ISMAEL ALLENDES
Date: 2021.02.03 21:50:26 -05'00'

SEAL

AA-26001915

A-4

SHEET 4 OF 4

SCALE:	AS SHOWN
DATE:020520	DRAWN:AR

Designs are subject to modification or change as required by actual measurements, standard industry practices in light of existing structural and other conditions, applicable bldg. codes, and the like. These plans are and shall remain the property of IAA-Allendes and shall not be sold or reproduced without its prior written consent. IAA-Allendes shall be notified of any changes recd by actual measurements, etc. as aforesaid prior to submission of any phase for bid or construction.