Save PDF File Print PDF File

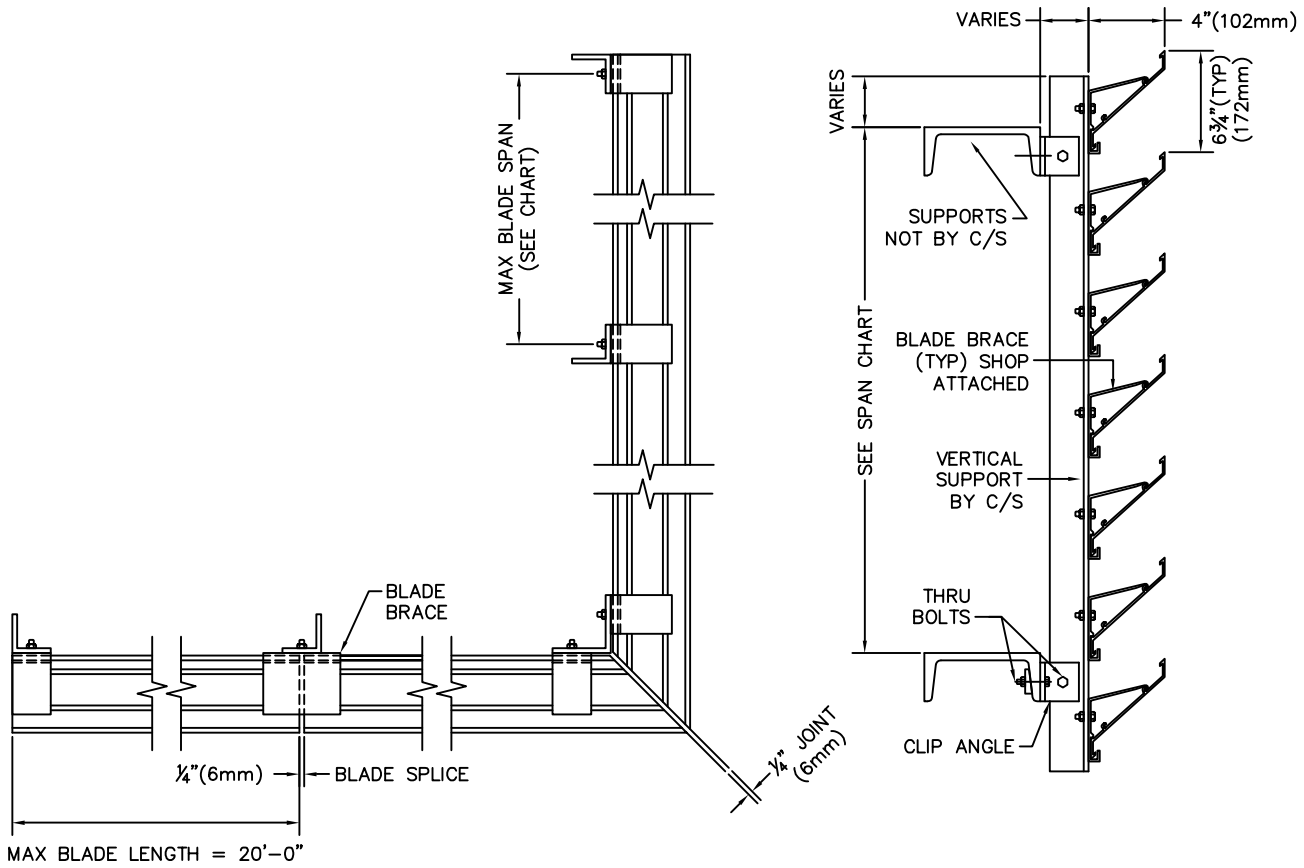

MODEL VC-301

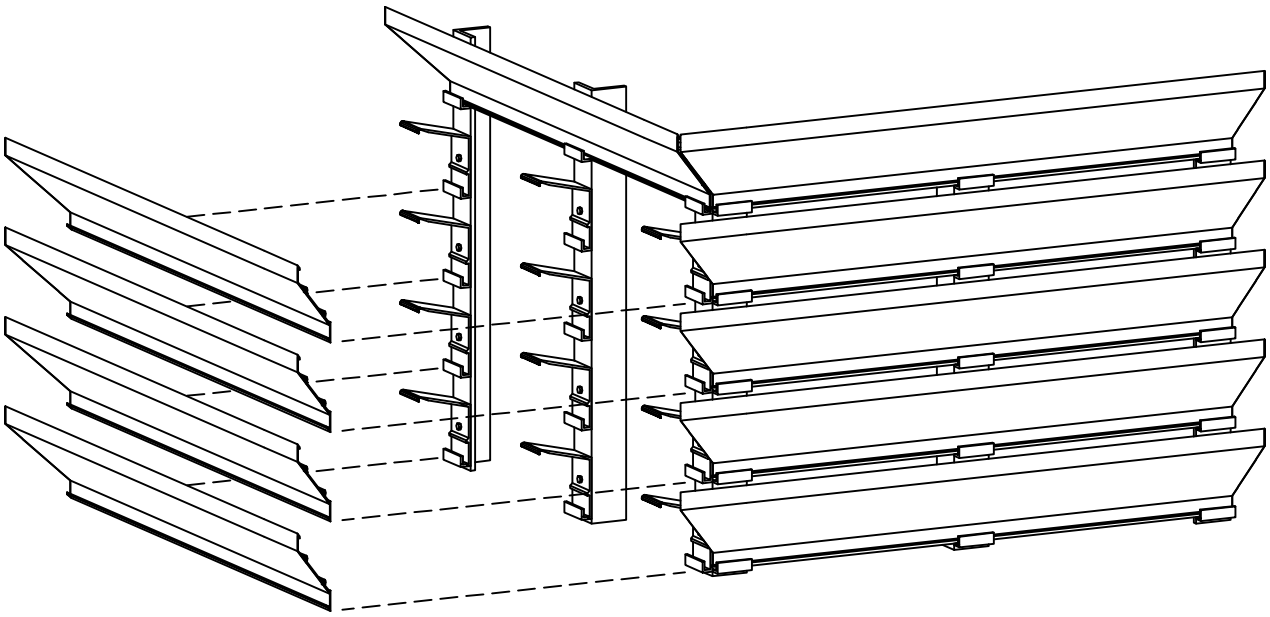

CONSTRUCTION SPECIALTIES, INC.
49 MEEKER AVENUE, CRANFORD, NEW JERSEY
PHONE: 1-800-631-7379 / FAX: 908-272-2920

PROJECT:	REV. BY:
CUSTOMER:	DSGN & DRW BY: M. MORCOS
ARCH'T:	DATE:
AGENT:	DRW NO : 1 OF 4