CITY OF MIAMI BEACH

PLANNING DEPARTMENT

CERTIFICATE OF APPROPRIATENESS APPLICATION

First CAP submittal– November 19, 2018

HPB 18-0255

CROWN CASTLE

SMALL WIRELESS FACILITIES

SFL10265

950 10th Street, Miami Beach, FL 33139

TABLE OF CONTENTS

Crown Castle Small Wireless Facilities

1. Letter of Intent
   Certificate of Appropriateness Application
   Exhibit "A" – Legal Description

2. Survey

3. Proposed Site Plan

4. Aerial Location Photo
   Location Map

5. Comprehensive Location Site Plan
   - North Nodes Enlarged Location Site Plan
   - Central Nodes Enlarged Location Site Plan
   - Belle Island Nodes Enlarged Location Site Plan
   - South Nodes Enlarged Location Site Plan`

6. Contextual Photo Image

7. Co-location Restrictions Letter

8. Existing Site Photos

9. 12" round Small Wireless Facilities with 25'-0" High Street Light Specification Sheet

10. 12" Active RAN Equipment Specification Sheet

11. Color Chart for 12" Ion Utility Pole with Street Light

12. Standard Arm and Cobra Head Light Specification Sheets provided by City of Miami Beach Public Works Department

Crown Castle
1601 NW 136th Avenue
Suite A-200, Building A
Sunrise, FL 33323

February 12, 2019

Via Hand Delivery

Ms. Deborah Tackett
Miami Beach Planning Department
Miami Beach City Hall
1700 Convention Center Dr.
Miami Beach, FL 33139

Re: Crown Castle Letter of Intent for the Installation of Small Wireless Facilities within the Historic Districts in the City of Miami Beach

Dear Ms. Tackett:

Crown Castle NG East LLC ("Crown Castle") seeks to place a small wireless facilities network in the City of Miami Beach (the "City"), which will consist of placing fiber optic cable (underground) and nodes (utility poles containing telecommunications equipment) within the right of way. In order to meet the network coverage objectives of our customer, Crown Castle must place a portion of this network within the Historic Districts in the City. This letter will serve as support for each of those applications.

Description of the Project

As stated above, Crown Castle seeks to place a small wireless facilities network in Miami Beach in order to enhance the network capacity of its customer, which is a wireless carrier. The carrier has significant capacity issues in Miami Beach. In order to solve these capacity issues, small wireless facility nodes must be placed in the Historic Districts within the City.

Below is a brief description of the locations:

SFL10262 –990 8th Street, Miami Beach, FL 33139
SFL10265 – 950 10th Street, Miami Beach, FL 33139

Description of the Equipment

Crown Castle has worked with the staff of Miami Beach Planning Department for two years to find a design for small wireless facility nodes, which would both meet the network objectives of its client and meet the city's aesthetic and safety concerns about placing small wireless facility nodes in the Historic Districts. After much discussion and the recent passage of a new telecommunications ordinance by the City Commission addressing the installation of such technology in the City, Crown Castle has developed a stealth node which will function as both a street light pole and a telecommunications pole. An existing street light will be removed and replaced with a functioning small wireless facility stealth street light pole, which will not require additional ground equipment installed in the right of way.

Conclusion

Crown Castle has worked diligently with City staff to meet all of their concerns about placing small wireless facilities within the city, including the Historic Districts. Crown Castle believes it has satisfied all of the City's concerns and accordingly requests that the Historic Preservation Board approve its applications for the installation of small wireless facilities within certain Historic Districts in the City.

Sincerely,

Wanda Melton

Wanda Melton
Government Relations Manager

MIAMIBEACH

PLANNING DEPARTMENT

1700 Convention Center Drive, Miami Beach, Florida 33139; Tel: 305.673.7550; Web: www.miamibeachfl.gov/planning

LAND USE BOARD HEARING APPLICATION

The following application is submitted for review and consideration of the project described herein by the land use board selected below. A separate application must be completed for each board reviewing the proposed project.

Application Information	
FILE NUMBER	
◯ **Board of Adjustment** ☐ Variance from a provision of the Land Development Regulations ☐ Appeal of an administrative decision	◯ **Design Review Board** ☐ Design review approval ☐ Variance
◯ **Planning Board** ☐ Conditional use permit ☐ Lot split approval ☐ Amendment to the Land Development Regulations or zoning map ☐ Amendment to the Comprehensive Plan or future land use map	◉ **Historic Preservation Board** ■ Certificate of Appropriateness for design ☐ Certificate of Appropriateness for demolition ☐ Historic district/site designation ☐ Variance
☐ **Other:**	

Property Information – Please attach Legal Description as "Exhibit A"
ADDRESS OF PROPERTY Small Wireless Facilities: SFL10265 / 950 10th Street, Miami Beach, FL 33139
FOLIO NUMBER(S) N/A City of Miami Beach right of way

Property Owner Information				
PROPERTY OWNER NAME City of Miami Beach right of way				
ADDRESS		CITY	STATE	ZIPCODE
BUSINESS PHONE	CELL PHONE	EMAIL ADDRESS		

Applicant Information (if different than owner)				
APPLICANT NAME Crown Castle NG East LLC				
ADDRESS 1601 NW 136th Ave., suite A-200, Bldg. A		CITY Sunrise	STATE FL	ZIPCODE 33323
BUSINESS PHONE (786) 899-5916	CELL PHONE (205) 837-3430	EMAIL ADDRESS Wanda.Melton@crowncastle.com		

Summary of Request
PROVIDE A BRIEF SCOPE OF REQUEST Crown Castle seeks to add one Small Wireless Facilities with integrated street light within the public right of way in the City of Miami Beach in order to improve the capacity and coverage of cellular devices within the City.

Project Information			
Is there an existing building(s) on the site?	☐ Yes	■ No	
Does the project include interior or exterior demolition?	☐ Yes	■ No	
Provide the total floor area of the new construction.		N/A	SQ. FT.
Provide the gross floor area of the new construction (including required parking and all usable area).		N/A	SQ. FT.

Party responsible for project design				
NAME Richard Heisenbottle		■ Architect ☐ Contractor ☐ Landscape Architect ☐ Engineer ☐ Tenant ☐ Other_____		
ADDRESS 2199 Ponce de Leon Blvd., suite 400		CITY Coral Gables	STATE FL	ZIPCODE 33134
BUSINESS PHONE (305) 446-7799 xtn 21	CELL PHONE (786) 218-6722	EMAIL ADDRESS richard@rjha.net		

Authorized Representative(s) Information (if applicable)				
NAME Crown Castle NG East LLC / Wanda Melton		☐ Attorney ■ Contact ☐ Agent ☐ Other_____		
ADDRESS 1601 NW 136 Ave., suite A-200, Bldg. A		CITY Sunrise	STATE FL	ZIPCODE 33323
BUSINESS PHONE (786) 899-5916	CELL PHONE (205) 837-3430	EMAIL ADDRESS Wanda.Melton@crowncastle.com		
NAME Dean Ridgway		☐ Attorney ■ Contact ☐ Agent ☐ Other_____		
ADDRESS 1601 NW 136 Ave., suite A-200, Bldg. A		CITY Sunrise	STATE FL	ZIPCODE 33323
BUSINESS PHONE (305) 728-0154	CELL PHONE (802) 310-2349	EMAIL ADDRESS Dean.Ridgway@crowncastle.com		
NAME		☐ Attorney ☐ Contact ☐ Agent ☐ Other_____		
ADDRESS		CITY	STATE	ZIPCODE
BUSINESS PHONE	CELL PHONE	EMAIL ADDRESS		

Please note the following information:

- A separate disclosure of interest form must be submitted with this application if the applicant or owner is a corporation, partnership, limited partnership or trustee.
- All applicable affidavits must be completed and the property owner must complete and sign the "Power of Attorney" portion of the affidavit if they will not be present at the hearing, or if other persons are speaking on their behalf.
- To request this material in alternate format, sign language interpreter (five-day notice is required), information on access for persons with disabilities, and accommodation to review any document or participate in any City sponsored proceedings, call 305.604.2489 and select (1) for English or (2) for Spanish, then option 6; TTY users may call via 711 (Florida Relay Service).

Please read the following and acknowledge below:

- Applications for any board hearing(s) will not be accepted without payment of the required fees. All checks are to be made payable to the "City of Miami Beach".

- Public records notice – All documentation submitted for this application is considered a public record subject to Chapter 119 of the Florida Statutes and shall be disclosed upon request.

- In accordance with the requirements of Section 2-482 of the code of the City of Miami Beach, any individual or group that will be compensated to speak or refrain from speaking in favor or against an application being presented before any of the City's land use boards, shall fully disclose, prior to the public hearing, that they have been, or will be compensated. Such parties include: architects, engineers, landscape architects, contractors, or other persons responsible for project design, as well as authorized representatives attorneys or agents and contact persons who are representing or appearing on behalf of a third party; such individuals must register with the City Clerk prior to the hearing.

- In accordance with Section 118-31. – Disclosure Requirement. Each person or entity requesting approval, relief or other action from the Planning Board, Design Review Board, Historic Preservation Board or the Board of Adjustment shall disclose, at the commencement (or continuance) of the public hearing(s), any consideration provided or committed, directly or on its behalf, for an agreement to support or withhold objection to the requested approval, relief or action, excluding from this requirement consideration for legal or design professional service rendered or to be rendered. The disclosure shall: (I) be in writing, (II) indicate to whom the consideration has been provided or committed, (III) generally describe the nature of the consideration, and (IV) be read into the record by the requesting person or entity prior to submission to the secretary/clerk of the respective board. Upon determination by the applicable board that the forgoing disclosure requirement was not timely satisfied by the person or entity requesting approval, relief or other action as provided above, then (I) the application or order, as applicable, shall immediately be deemed null and void without further force or effect, and (II) no application form said person or entity for the subject property shall be reviewed or considered by the applicable board(s) until expiration of a period of one year after the nullification of the application or order. It shall be unlawful to employ any device, scheme or artifice to circumvent the disclosure requirements of this section and such circumvention shall be deemed a violation of the disclosure requirements of this section.

- When the applicable board reaches a decision a final order will be issued stating the board's decision and any conditions imposed therein. The final order will be recorded with the Miami-Dade Clerk of Courts. The original board order shall remain on file with the City of Miami Beach Planning Department. Under no circumstances will a building permit be issued by the City of Miami Beach without a copy of the recorded final order being included and made a part of the plans submitted for a building permit.

The aforementioned is acknowledged by: ☐ Owner of the subject property ☐ Authorized representative

Wanda Melton

SIGNATURE

Wanda Melton

PRINT NAME

DATE SIGNED

OWNER AFFIDAVIT FOR INDIVIDUAL OWNER

STATE OF _____

COUNTY OF _____

I, _____, being first duly sworn, depose and certify as follows: (1) I am the owner of the property that is the subject of this application. (2) This application and all information submitted in support of this application, including sketches, data, and other supplementary materials, are true and correct to the best of my knowledge and belief. (3) I acknowledge and agree that, before this application may be publicly noticed and heard by a land development board, the application must be complete and all information submitted in support thereof must be accurate. (4) I also hereby authorize the City of Miami Beach to enter my property for the sole purpose of posting a Notice of Public Hearing on my property, as required by law. (5) I am responsible for remove this notice after the date of the hearing.

_____
SIGNATURE

Sworn to and subscribed before me this _____ day of _____ , 20_____. The foregoing instrument was acknowledged before me by _____ , who has produced _____ as identification and/or is personally known to me and who did/did not take an oath.

NOTARY SEAL OR STAMP

_____
NOTARY PUBLIC

My Commission Expires: _____

_____
PRINT NAME

ALTERNATE OWNER AFFIDAVIT FOR CORPORATION, PARTNERSHIP OR LIMITED LIABILITY COMPANY

STATE OF Florida

COUNTY OF Broward

I, Wanda Melton, being first duly sworn, depose and certify as follows: (1) I am the Government Relations Manager (print title) of Crown Castle (print name of corporate entity). (2) I am authorized to file this application on behalf of such entity. (3) This application and all information submitted in support of this application, including sketches, data, and other supplementary materials, are true and correct to the best of my knowledge and belief. (4) The corporate entity named herein is the owner of the property that is the subject of this application. (5) I acknowledge and agree that, before this application may be publicly noticed and heard by a land development board, the application must be complete and all information submitted in support thereof must be accurate. (6) I also hereby authorize the City of Miami Beach to enter my property for the sole purpose of posting a Notice of Public Hearing on my property, as required by law. (7) I am responsible for remove this notice after the date of the hearing.

Wanda Melton
SIGNATURE

Sworn to and subscribed before me this 5 day of November, 20 18. The foregoing instrument was acknowledged before me by Wanda Melton, who has produced _____ as identification and/or is personally known to me and who did/did not take an oath.

NOTARY SEAL OR STAMP

NOTARY PUBLIC STATE OF FLORIDA
GALE LOGAN
MY COMMISSION # GG 121026
EXPIRES: July 4, 2021
Bonded Thru Notary Public Underwriters

Gale Logan
NOTARY PUBLIC

My Commission Expires: 7-4-21

Gale Logan
PRINT NAME

POWER OF ATTORNEY AFFIDAVIT

STATE OF Florida

COUNTY OF Broward

I, Wanda Melton, being first duly sworn, depose and certify as follows: (1) I am the owner or representative of the owner of the real property that is the subject of this application. (2) I hereby authorize Richard Heisenbottle to be my representative before the HPB Board. (3) I also hereby authorize the City of Miami Beach to enter my property for the sole purpose of posting a Notice of Public Hearing on my property, as required by law. (4) I am responsible for remove this notice after the date of the hearing.

Wanda Melton, Government Relations Mgr
PRINT NAME (and Title, if applicable)

Wanda Melton
SIGNATURE

Sworn to and subscribed before me this 5 day of November, 20 18. The foregoing instrument was acknowledged before me by Wanda Melton, who has produced _____ as identification and/or is personally known to me and who did/did not take an oath.

NOTARY SEAL OR STAMP

GALE LOGAN
MY COMMISSION # GG 121026
EXPIRES: July 4, 2021
Bonded Thru Notary Public Underwriters

Gale Logan
NOTARY PUBLIC

My Commission Expires: 7-4-21

Gale Logan
PRINT NAME

CONTRACT FOR PURCHASE

If the applicant is not the owner of the property, but the applicant is a party to a contract to purchase the property, whether or not such contract is contingent on this application, the applicant shall list the names of the contract purchasers below, including any and all principal officers, stockholders, beneficiaries or partners. If any of the contact purchasers are corporations, partnerships, limited liability companies, trusts, or other corporate entities, the applicant shall further disclose the identity of the individuals(s) (natural persons) having the ultimate ownership interest in the entity. If any contingency clause or contract terms involve additional individuals, corporations, partnerships, limited liability companies, trusts, or other corporate entities, list all individuals and/or corporate entities.

NAME _____ **DATE OF CONTRACT** _____

NAME, ADDRESS AND OFFICE	% OF STOCK

In the event of any changes of ownership or changes in contracts for purchase, subsequent to the date that this application if filed, but prior to the date of a final public hearing, the applicant shall file a supplemental disclosure of interest.

DISCLOSURE OF INTEREST
CORPORATION, PARTNERSHIP OR LIMITED LIABILITY COMPANY

If the property that is the subject of the application is owned or leased by a corporation, partnership or limited liability company, list ALL of the owners, shareholders, partners, managers and/or members, and the percentage of ownership held by each. If the owners consist of one or more corporations, partnerships, trusts, partnerships or other corporate entities, the applicant shall further disclose the identity of the individual(s) (natural persons) having the ultimate ownership interest in the entity.

CROWN CASTLE NG EAST LLC

NAME OF CORPORATE ENTITY

NAME AND ADDRESS	% OF OWNERSHIP
fka CROWN CASTLE NG EAST INC.	
CROWN CASTLE NG NETWORKS INC.	100% of NG East LLC
CROWN CASTLE NG SOLUTIONS CORP.	100% of NG Networks Inc.
CROWN CASTLE OPERATING COMPANY	100% of Solutions Corp.
CROWN CASTLE INTERNATIONAL CORP.	100% of operating Co.
	& is Publicly Trade

NAME OF CORPORATE ENTITY

NAME AND ADDRESS	% OF OWNERSHIP

If there are additional corporate owners, list such owners, including corporate name and the name, address and percentage of ownership of each additional owner, on a separate page.

COMPENSATED LOBBYIST

Pursuant to Section 2-482 of the Miami Beach City Code, all lobbyists shall, before engaging in any lobbying activities, register with the City Clerk. Please list below any and all persons or entities retained by the applicant to lobby City staff or any of the City's land development boards in support of this application.

NAME	ADDRESS	PHONE

Additional names can be placed on a separate page attached to this application.

APPLICANT HEREBY ACKNOWLEDGES AND AGREES THAT (1) AN APPROVAL GRANTED BY A LAND DEVELOPMENT BOARD OF THE CITY SHALL BE SUBJECT TO ANY AND ALL CONDITIONS IMPOSED BY SUCH BOARD AND BY ANY OTHER BOARD HAVING JURISDICTION, AND (2) APPLICANT'S PROJECT SHALL COMPLY WITH THE CODE OF THE CITY OF MIAMI BEACH AND ALL OTHER APPLICABLE CITY, STATE AND FEDERAL LAWS.

APPLICANT AFFIDAVIT

STATE OF Florida

COUNTY OF Broward

I, Wanda Melton, being first duly sworn, depose and certify as follows: (1) I am the applicant or representative of the applicant. (2) This application and all information submitted in support of this application, including sketches, data, and other supplementary materials, are true and correct to the best of my knowledge and belief.

Wanda Melton
SIGNATURE

Sworn to and subscribed before me this 5 day of November, 20 18. The foregoing instrument was acknowledged before me by Wanda Melton, who has produced _____ as identification and/or is personally known to me and who did/did not take an oath.

NOTARY SEAL OR STAMP

GALE LOGAN
MY COMMISSION # GG 121026
EXPIRES: July 4, 2021
Bonded Thru Notary Public Underwriters

Gale Logan
NOTARY PUBLIC

My Commission Expires: 7-4-21

Gale Logan
PRINT NAME

EXHIBIT A

LEGAL DESCRIPTION

PROPOSED CROWN CASTLE SMALL WIRELESS FACILITIES WITH INTEGRATED STREET LIGHT LOCATED AT LATITUDE NORTH 25°46’49.7”, LONGITUDE WEST 80°08’18.3”; X = 939688.174, Y=526829.475

NORTH

SCALE:1"=10' (SHEET SIZE 24"x36")

SCALE:1"=20' (SHEET SIZE 11"x17")

0 10' 20' 30'

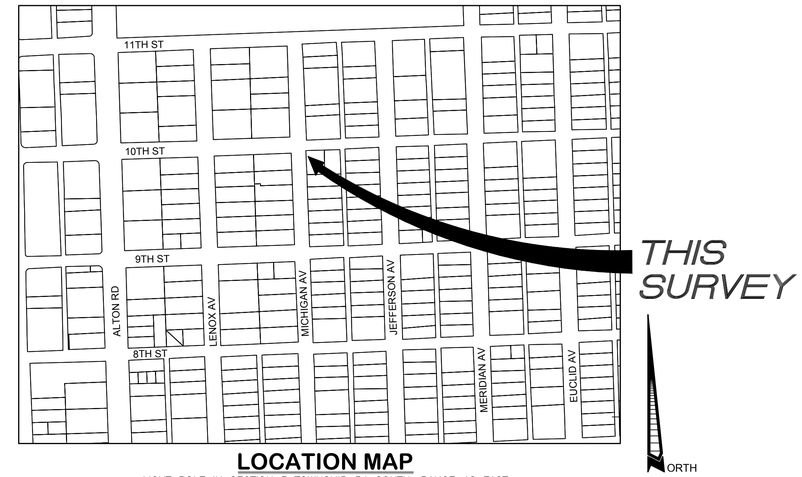

LOCATION MAP

LIGHT POLE IN SECTION 3 TOWNSHIP 54 SOUTH, RANGE 42 EAST
CITY OF MIAMI BEACH, MIAMI-DADE COUNTY, FLORIDA
SCALE: 1" = 300' (SHEET SIZE 24"x36")
SCALE: 1" = 600' (SHEET SIZE 11"x17")

0 300' 600' 900'

NOTES:

1. This is a Specific Purpose Radial Survey for the stated purpose of locating improvements within a 50' wide radius of the existing light pole to be used for proposed telecommunications equipment. Client provided the location of the subject light pole.
2. BEARINGS shown hereon are based upon the centerline of 10th Street with an assumed bearing of N88°08'28"E .
3. Right-of-way widths determined from Plat Book 2 Page 81 and Plat Book 7 Page 15.
4. Geodetic and Florida State Plane coordinates shown hereon are based on G.P.S. observation using the Florida Permanent Reference Network (FRPN) base station "FLMB". Accuracy within tolerances as set forth by the F.A.A. Referenced to North American Datum 1983, 1990 Adjustment.
5. 2016 Aerial Photograph shown hereon obtained from Florida Department of Transportation.
6. All dimensions are shown in feet and decimal feet.
7. No attempt was made by this firm to determine the nature, size, and location of underground utilities. Underground paint mark locations were located at the time of this survey and plotted hereon. Contractor should notify "Sunshine No-Cuts" prior to ANY excavation work. This is not a comprehensive Utility Survey.
8. All documents are recorded in the Public Records of Miami-Dade County, Florida. unless otherwise noted.
9. The lands shown hereon have not been abstracted by this firm regarding matters of interest to other parties, such as easements, rights-of-ways, reservations, etc. A Title Commitment review has not been performed.
10. Roof overhangs, if any, not shown unless otherwise noted.
11. The subject light pole lies in Section 3-54S-42E in the City of Miami Beach, Miami-Dade County, Florida.
12. Right-Of-Way lines do not represent an opinion of ownership by this Firm.
13. Fence and wall ownership is not determined. This survey does not reflect or determine ownership.
14. In some instances graphic representation have been exaggerated to more clearly illustrate the relationship between physical improvements and/or lot lines. Dimensions shall control the location of the improvements over scaled positions.
15. THIS IS NOT A BOUNDARY SURVEY.

LEGEND:

	-	CONCRETE
CB	-	CATCH BASIN
CBS	-	CONCRETE BLOCK & STUCCO
D	-	DIAMETER
DCR	-	MIAMI-DADE COUNTY RECORDS
DMH	-	DRAINAGE MANHOLE
F.A.A.	-	FEDERAL AVIATION ADMINISTRATION
FEMA	-	FEDERAL EMERGENCY MANAGEMENT AGENCY
FH	-	FIRE HYDRANT
G.P.S.	-	GLOBAL POSITIONING SYSTEM
H	-	HEIGHT
HCR	-	HANDICAP RAMP
ID.	-	IDENTIFICATION
IP	-	IRON PIPE
MLP	-	METAL LIGHT POLE
NO.	-	NUMBER
NPB	-	NEWSPAPER BOX
ORB	-	OFFICIAL RECORDS BOOK
PB	-	PLAT BOOK
PKD	-	PARKER-KALON NAIL & DISC
PL	-	PLANTER
S	-	SPREAD
WV	-	WATER VALVE

FEMA FLOOD ZONE

Community No.:	*120651*
Community Name:	*CITY OF MIAMI BEACH*
Panel No:	*0319* *Suffix: L*
Map Number:	*12086C0319L*
Flood Zone:	*AE*
Base Flood Elevation:	*8.0' NGVD 1929*
Date of Map Panel:	*9/11/2009*
Date of Firm Index:	*9/11/2009*

KNOW WHAT'S BELOW ALWAYS CALL 811 BEFORE YOU DIG

It's fast. It's free. It's the law.

www.callsunshine.com

CROWN CASTLE SFL10265

NEAR ADDRESS: 950 10th STREET, MIAMI BEACH, FLORIDA 33139

TYPE OF SURVEY: *SPECIFIC PURPOSE RADIAL SURVEY*

PREPARED FOR: **MORRISON HERSHFIELD CORP.**

LEITER, PEREZ & ASSOCIATES, INC.
LAND DEVELOPMENT CONSULTANTS
CIVIL ENGINEERS - LAND SURVEYORS
LAND PLANNERS - ENVIRONMENTAL
520 N.W. 165TH STREET ROAD, SUITE 209, MIAMI, FLORIDA 33169
MIAMI-DADE (305) 652-5133 BROWARD (954)524-2202 FAX: (305) 652-0411
E-Mail: office@leiterperez.com WEBSITE: www.leiterperez.com LICENSED BUSINESS No. 6787

SURVEY DATE:	07-16-18
JOB ORDER:	18-217
FILE NO.:	B-2487
FILE NAME:	18-217 SFL10265.dwg
F.B. 350	PG. 42

REVISIONS:

DATE:	JOB ORDER:	DESCRIPTION:	F.B.	PG.

NOTES

1. ELEVATIONS WHEN SHOWN REFER TO THE NATIONAL GEODETIC VERTICAL DATUM (NGVD) 1929.
2. THIS FIRM HAS MADE NO ATTEMPT TO LOCATE FOOTINGS AND/OR FOUNDATIONS (UNLESS OTHERWISE NOTED).
3. THE LANDS SHOWN HEREON HAVE NOT BEEN ABSTRACTED BY THIS FIRM REGARDING MATTERS OF INTEREST, OTHER PARTIES, SUCH AS EASEMENTS, RIGHTS-OF-WAY, ETC.
4. THIS SURVEY WAS PREPARED FOR AND CERTIFIED TO THE PARTY AND/OR PARTIES INDICATED HEREON AND IS NOT TRANSFERABLE OR ASSIGNABLE.
5. ALL IRON PIPES & NAILS AND DISCS SET BY THIS FIRM, SET WITH CAP OR DISC WITH LB# 6787.

SURVEYOR'S CERTIFICATE:

WE HEREBY CERTIFY: THAT THIS SURVEY IS TRUE AND CORRECT TO THE BEST OF OUR KNOWLEDGE AND BELIEF AS RECENTLY SURVEYED AND DRAWN UNDER OUR DIRECTION, AND THAT THIS SURVEY MEETS THE "STANDARDS OF PRACTICE" AS SET FORTH BY THE FLORIDA STATE BOARD OF PROFESSIONAL SURVEYORS AND MAPPERS IN CHAPTER 5J-17 FLORIDA ADMINISTRATIVE CODE, PURSUANT TO SECTION 470.027 FLORIDA STATUTES.

LEITER, PEREZ & ASSOCIATES, INC.

BY:_____, PRESIDENT

GEOFFREY LEITER, PROFESSIONAL SURVEYOR & MAPPER #6395
STATE OF FLORIDA

NOT VALID WITHOUT THE SIGNATURE AND THE ORIGINAL RAISED SEAL OF A FLORIDA LICENSED SURVEYOR AND MAPPER.

SHEET 1 OF 1

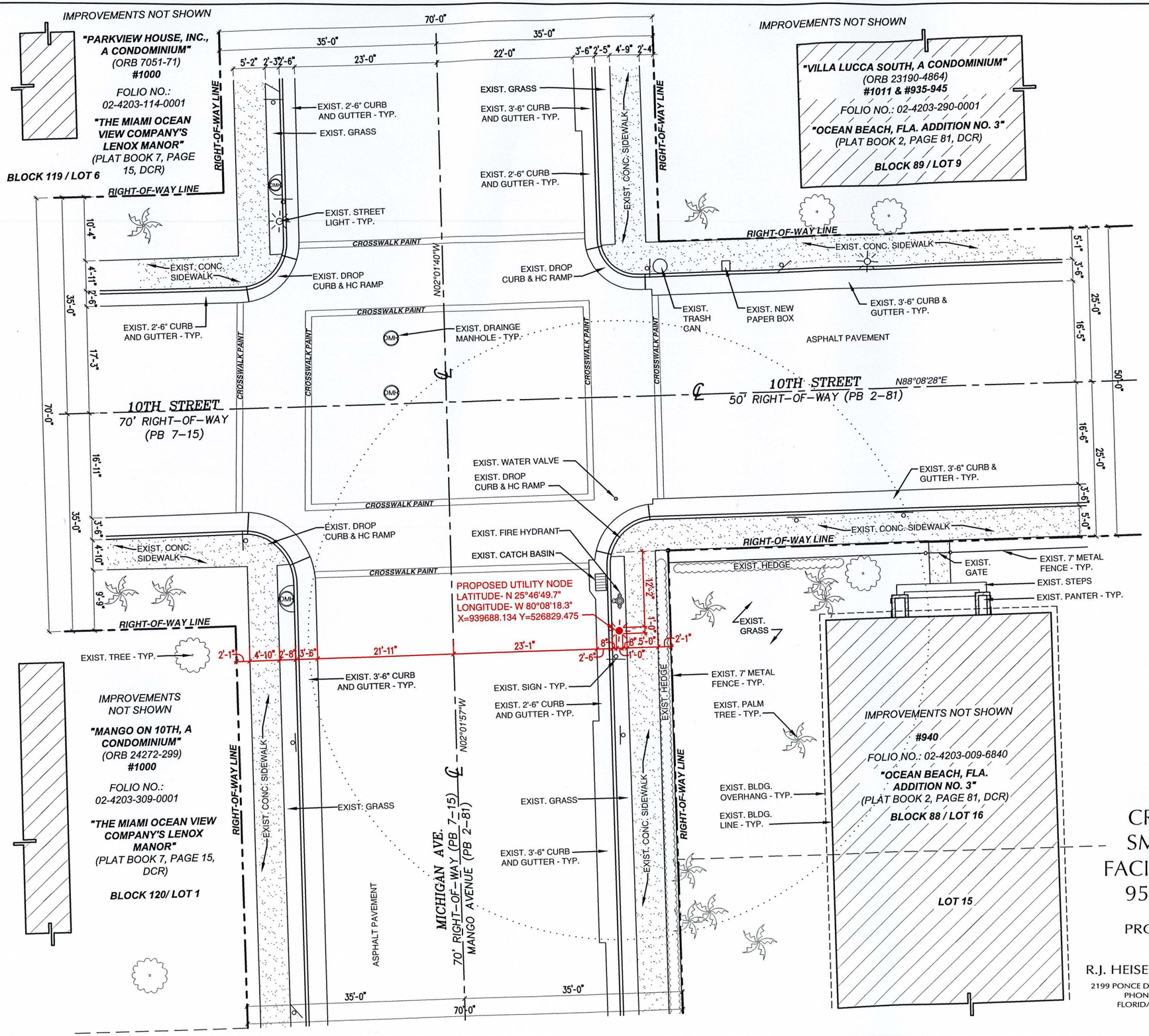

CROWN CASTLE SMALL WIRELESS FACILITIES (SFL10265)
950 10TH STREET

PROPOSED SITE PLAN

N.T.S.

November 16, 2018

11.29.18

R.J. HEISENBOTTLE ARCHITECTS, P.A.
2199 PONCE DE LEON BLV, CORAL GABLES, FLORIDA 33134
PHONE: 305.446.7799 / FAX: 305.446.9275
FLORIDA REGISTRATION NUMBER: AR 0010865

SFL10265

950 10th Street, Miami Beach, FL 33139

Aerial View

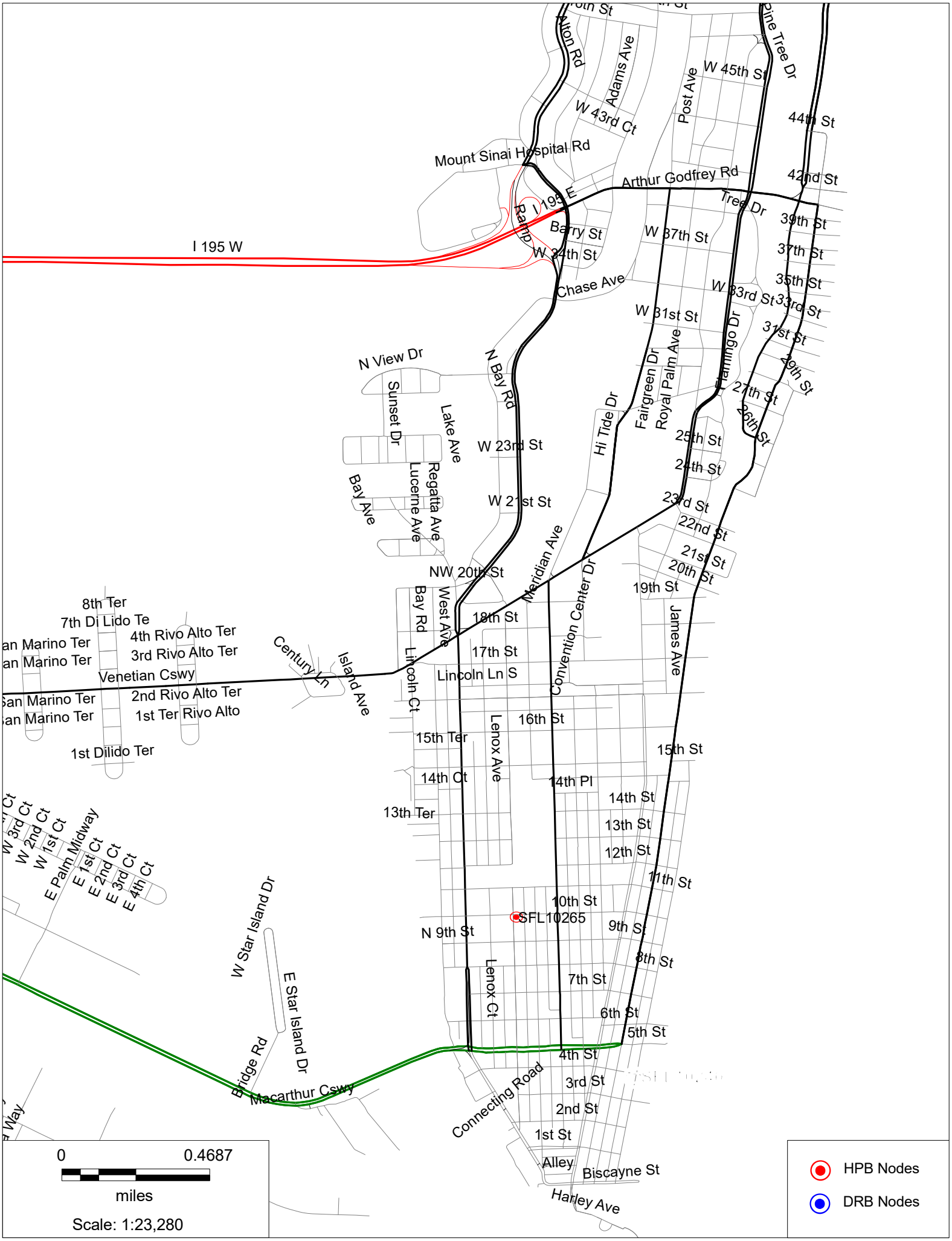
I 195 W
I 195 E
Ramp
Mount Sinai Hospital Rd
Alton Rd
Adams Ave
W 43rd Ct
Post Ave
W 45th St
Pine Tree Dr
44th St
42nd St
Arthur Godfrey Rd
Tree Dr
39th St
37th St
35th St
33rd St
31st St
29th St
27th St
26th St
25th St
24th St
23rd St
22nd St
21st St
20th St
19th St
Barry St
W 34th St
W 37th St
W 33rd St
Chase Ave
W 31st St
Flamingo Dr
Fairgreen Dr
Royal Palm Ave
Hi Tide Dr
N View Dr
N Bay Rd
Sunset Dr
Lake Ave
W 23rd St
Regatta Ave
Lucerne Ave
Bay Ave
W 21st St
Meridian Ave
Convention Center Dr
James Ave
NW 20th St
Bay Rd
West Ave
18th St
17th St
Lincoln Ln S
Lincoln Ct
Lenox Ave
16th St
15th Ter
15th St
14th Ct
14th Pl
14th St
13th Ter
13th St
12th St
11th St
10th St
SFL10265
9th St
N 9th St
8th St
7th St
Lenox Ct
6th St
5th St
4th St
3rd St
2nd St
1st St
Alley
Biscayne St
Harley Ave
Connecting Road
Macarthur Cswy
Bridge Rd
W Star Island Dr
E Star Island Dr
Island Ave
Century Ln
8th Ter
7th Di Lido Te
4th Rivo Alto Ter
3rd Rivo Alto Ter
Venetian Cswy
2nd Rivo Alto Ter
1st Ter Rivo Alto
1st Dilido Ter
W 3rd Ct
W 2nd Ct
W 1st Ct
E Palm Midway
E 1st Ct
E 2nd Ct
E 3rd Ct
E 4th Ct
0
0.4687
miles
Scale: 1:23,280
HPB Nodes
DRB Nodes

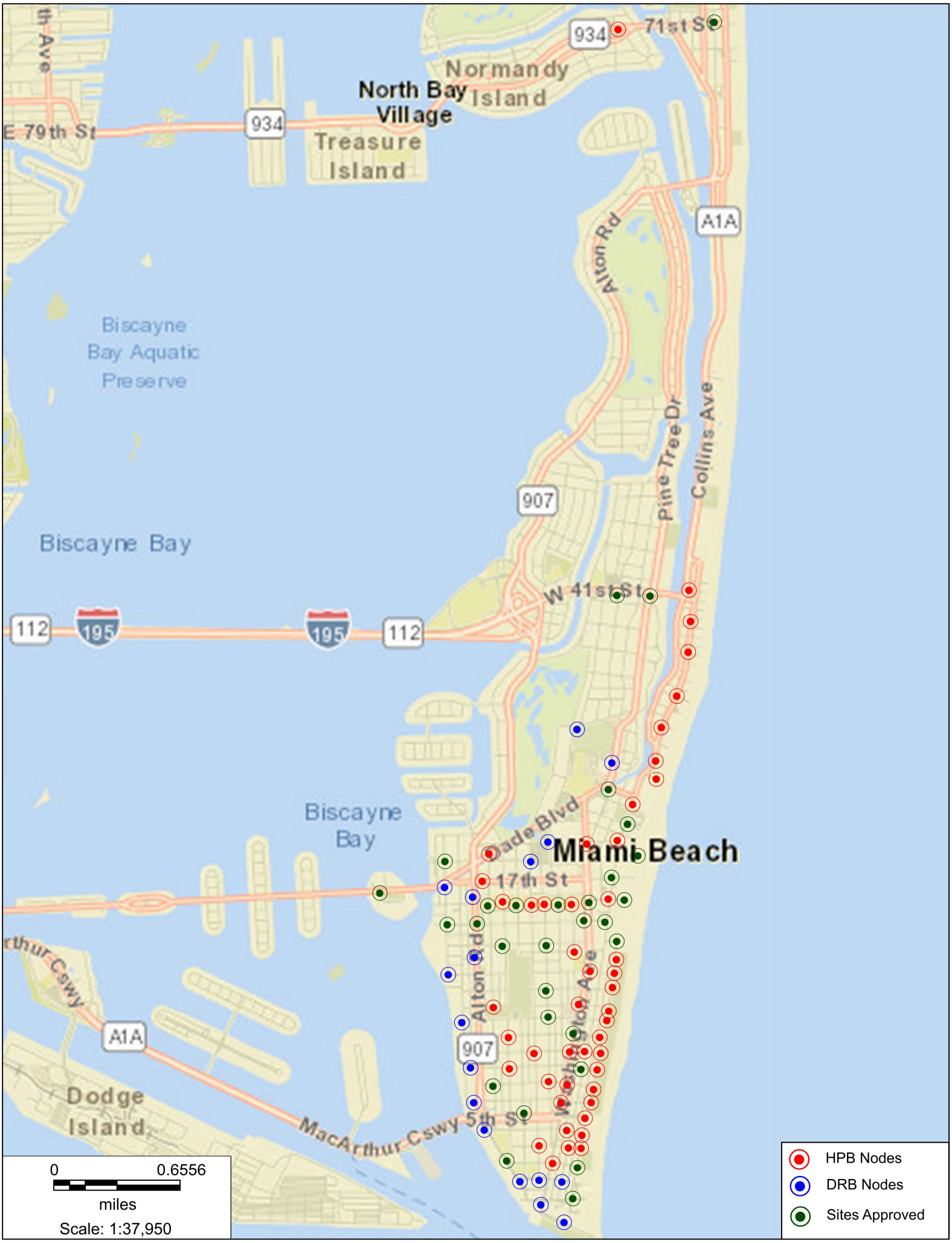
th Ave
E 79th St
934
North Bay Village
Normandy Island
71st St
Treasure Island
A1A
Alton Rd
Biscayne Bay Aquatic Preserve
Pine Tree Dr
Collins Ave
907
Biscayne Bay
W 41st St
112
195
Biscayne Bay
Dade Blvd
Miami Beach
17th St
rthur Cswy
Alton Rd
Lincoln Rd
Ave
A1A
907
Dodge Island
MacArthur Cswy
5th St
0
0.6556
miles
Scale: 1:37,950
HPB Nodes
DRB Nodes
Sites Approved

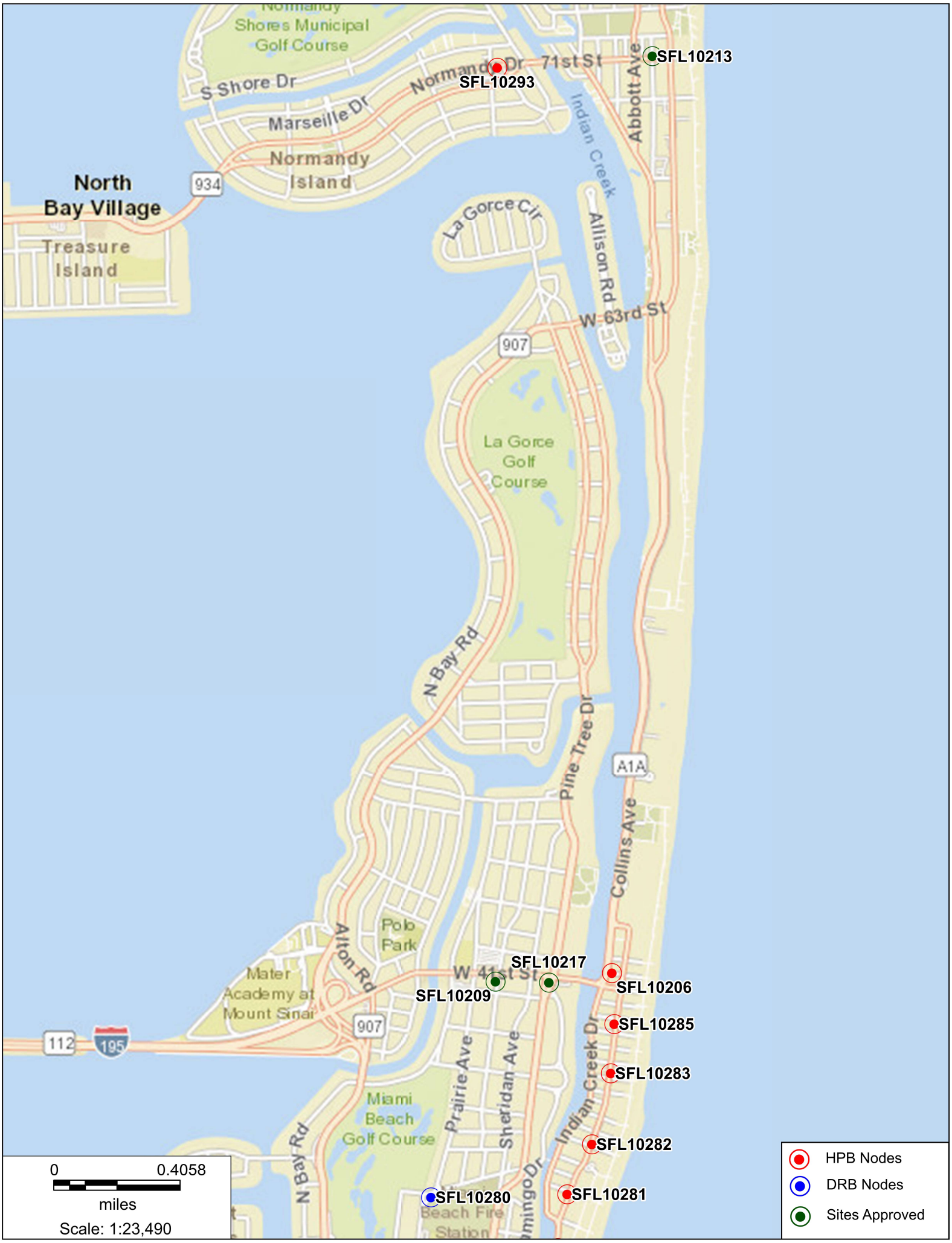
Normandy Shores Municipal Golf Course
S Shore Dr
Normandy Dr
71st St
Marseille Dr
Normandy Island
North Bay Village
934
Treasure Island
Indian Creek
Abbott Ave
La Gorce Cir
Allison Rd
W 63rd St
907
La Gorce Golf Course
N Bay Rd
Pine Tree Dr
A1A
Collins Ave
Polo Park
Alton Rd
Mater Academy at Mount Sinai
W 41st St
907
112
195
Prairie Ave
Sheridan Ave
Indian Creek Dr
Miami Beach Golf Course
N Bay Rd
Dmingo Dr
Beach Fire Station
SFL10213
SFL10293
SFL10217
SFL10209
SFL10206
SFL10285
SFL10283
SFL10282
SFL10280
SFL10281
0
0.4058
miles
Scale: 1:23,490
HPB Nodes
DRB Nodes
Sites Approved

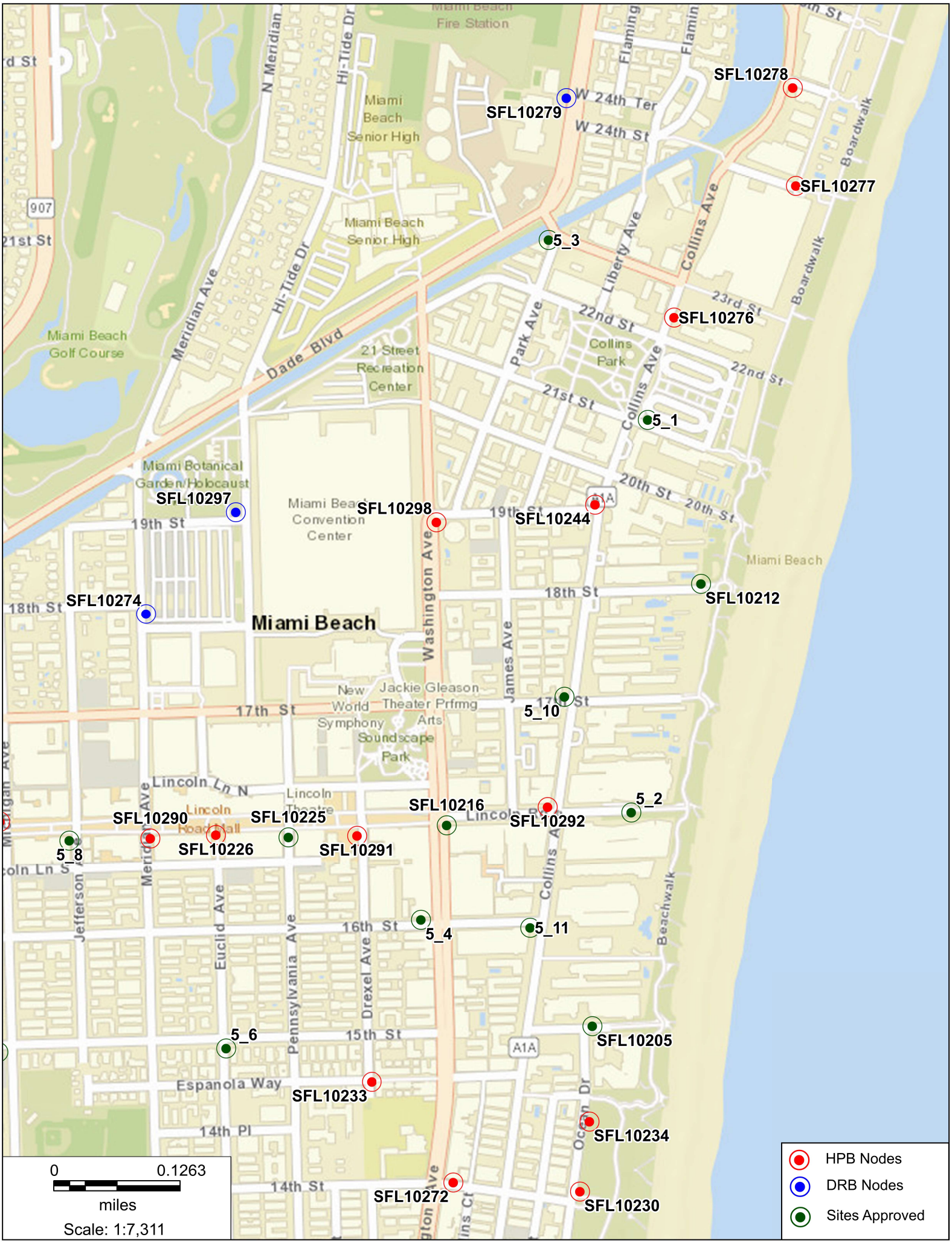
SFL10278
SFL10279
SFL10277
5_3
SFL10276
5_1
SFL10297
SFL10298
SFL10244
SFL10212
SFL10274
5_10
5_2
SFL10216
SFL10290
SFL10225
SFL10292
5_8
SFL10226
SFL10291
5_4
5_11
5_6
SFL10205
SFL10233
SFL10234
SFL10272
SFL10230
HPB Nodes
DRB Nodes
Sites Approved
0
0.1263
miles
Scale: 1:7,311
Miami Beach
Miami Beach Fire Station
Miami Beach Senior High
Miami Beach Golf Course
21 Street Recreation Center
Miami Botanical Garden/Holocaust
Miami Beach Convention Center
Jackie Gleason Theater Prfrmg Arts
New World Symphony
Soundscape Park
Lincoln Theatre
Lincoln Roadhall
Collins Park
W 24th Ter
W 24th St
23rd St
22nd St
21st St
20th St
19th St
18th St
17th St
16th St
15th St
14th Pl
14th St
Lincoln Ln N
Lincoln Ln S
Espanola Way
Dade Blvd
Meridian Ave
Hi-Tide Dr
Washington Ave
Park Ave
Liberty Ave
Collins Ave
James Ave
Jefferson Ave
Euclid Ave
Pennsylvania Ave
Drexel Ave
Ocean Dr
Boardwalk
Beachwalk
A1A
907

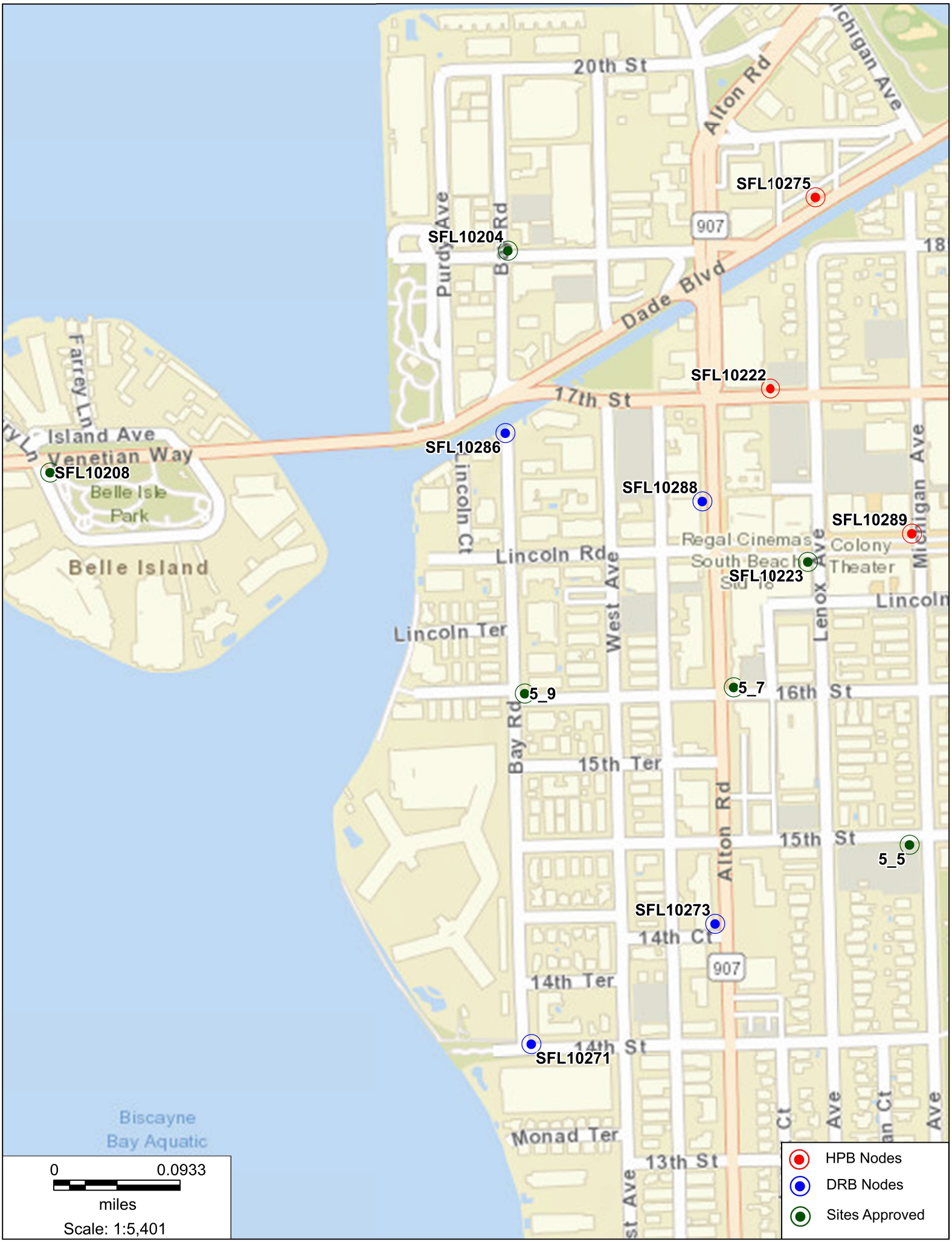
20th St
Alton Rd
Michigan Ave
SFL10275
907
SFL10204
Purdy Ave
Bay Rd
Dade Blvd
18
Farrey Ln
SFL10222
17th St
Island Ave
Venetian Way
SFL10286
SFL10208
Belle Isle Park
Lincoln Ct
SFL10288
SFL10289
Regal Cinemas South Beach
Colony Theater
Lincoln Rd
West Ave
SFL10223
Lenox Ave
Michigan Ave
Lincoln
Belle Island
Lincoln Ter
5_9
5_7
16th St
Bay Rd
15th Ter
Alton Rd
15th St
5_5
SFL10273
14th Ct
907
14th Ter
14th St
SFL10271
Biscayne Bay Aquatic
Monad Ter
13th St
0
0.0933
miles
Scale: 1:5,401
HPB Nodes
DRB Nodes
Sites Approved

SFL10265

950 10th Street, Miami Beach, FL 33139

Photosim - Proposed Small Wireless Facilities with 25' Cobra

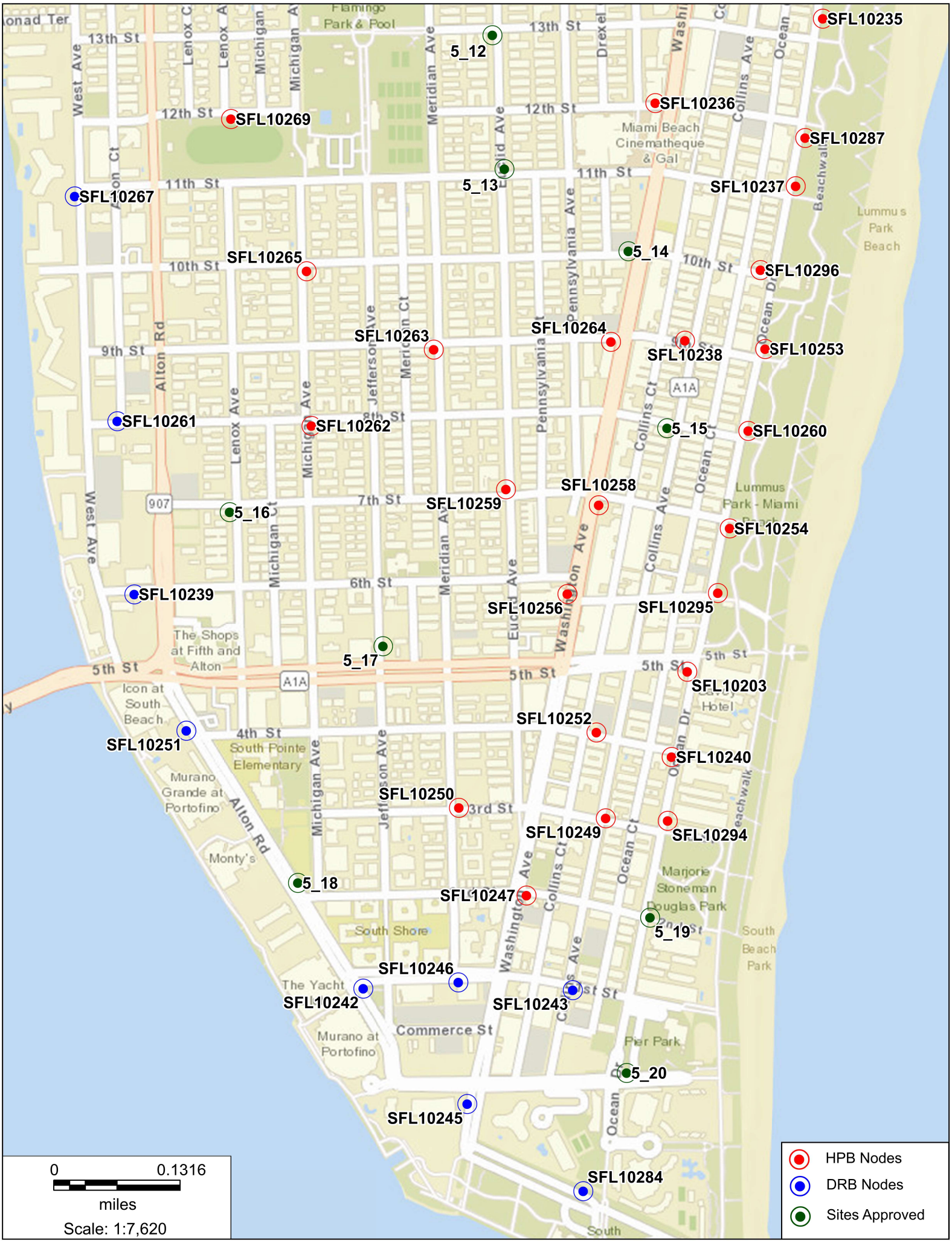
SFL10235
5_12
SFL10236
SFL10269
SFL10287
5_13
SFL10237
SFL10267
5_14
SFL10265
SFL10296
SFL10263
SFL10264
SFL10238
SFL10253
SFL10261
SFL10262
5_15
SFL10260
SFL10258
SFL10259
5_16
SFL10254
SFL10239
SFL10256
SFL10295
5_17
SFL10203
SFL10252
SFL10251
SFL10240
SFL10250
SFL10249
SFL10294
5_18
SFL10247
5_19
SFL10246
SFL10242
SFL10243
5_20
SFL10245
SFL10284
13th St
12th St
11th St
10th St
9th St
8th St
7th St
6th St
5th St
4th St
3rd St
West Ave
Alton Rd
Lenox Ave
Michigan Ave
Meridian Ave
Pennsylvania Ave
Collins Ave
Ocean Dr
Beachwalk
Washington Ave
Miami Beach Cinematheque & Gal
Lummus Park Beach
Lummus Park - Miami
The Shops at Fifth and Alton
Icon at South Beach
South Pointe Elementary
Murano Grande at Portofino
Monty's
South Shore
The Yacht
Murano at Portofino
Commerce St
Pier Park
Marjorie Stoneman Douglas Park
South Beach Park
Flamingo Park & Pool
A1A
907
0
0.1316
miles
Scale: 1:7,620
HPB Nodes
DRB Nodes
Sites Approved

SFL10265

950 10th Street, Miami Beach, FL 33139

Photosim - Proposed Small Wireless Facilities with 25' Cobra

SFL10265

950 10th Street, Miami Beach, FL 33139

Photosim - Proposed Small Wireless Facilities with 25' Cobra

Crown Castle
1601 NW 136th Avenue
Suite A-200, Building A
Sunrise, FL 33323

February 12, 2019

Deborah Tackett, Senior Planner
Planning and Zoning Department
1700 Convention Center Dr.
Miami Beach, FL 33139

Re: Historic Review Board Application for the installation of Small Wireless Facilities - Crown Castle Node SFL10265 – 950 10th Street, Miami Beach, FL 33139

Dear Ms. Tackett:

Crown Castle NG East LLC ("Crown Castle") respectfully submits this letter to the City of Miami Beach (the "City") regarding an application seeking Historic Preservation Board (the "Board") review and approval of small wireless facilities within the City. As part of the application package, the Board requires an explanation whenever a proposed utility pole cannot be collocated. This letter explains why the application package referred to above is for a "stand-alone" utility pole node rather than a node collocated on a pole or other infrastructure already existing in the right of way.

As you know, Florida Statutes Section 337.401 allows Crown Castle, a communications services provider, to place its communications facilities within the right of way. Although Crown Castle collocates its small wireless facilities whenever possible on poles and other infrastructure already existing in the right of way, in this case Crown Castle engineers examined each potential collocation site and determined that there was not a suitable collocation site which would have provided the wireless coverage for the intended target. In other words, the possible sites upon which Crown Castle might collocate the particular small wireless were too far away, were not in a location which would be able to provide the additional wireless capacity each small wireless facility was intended to provide, or were not sites for which Crown Castle had rights to attach.

Therefore, in each of these instances, Crown Castle is proposing a stand-alone stealth pole. The particular location referenced above was determined by Crown Castle engineers to be the preferred location as it provides additional capacity to both the intended target while taking into account aesthetic and traffic safety criteria.

Please do not hesitate to call or contact me with any further questions or to discuss this matter.

Sincerely,

Wanda Melton

Wanda Melton
Government Relations Manager
Southeast Region

SFL10265

950 10th Street, Miami Beach, FL 33139

Aerial View

SFL10265

950 10th Street, Miami Beach, FL 33139

East

SFL10265

950 10th Street, Miami Beach, FL 33139

North

SFL10265

950 10th Street, Miami Beach, FL 33139

West

SFL10265

950 10th Street, Miami Beach, FL 33139

South

REVISIONS			
REV.	DESCRIPTION	BY	DATE
A	MODIFIED ANTENNA USED	MJP	07/11/2018

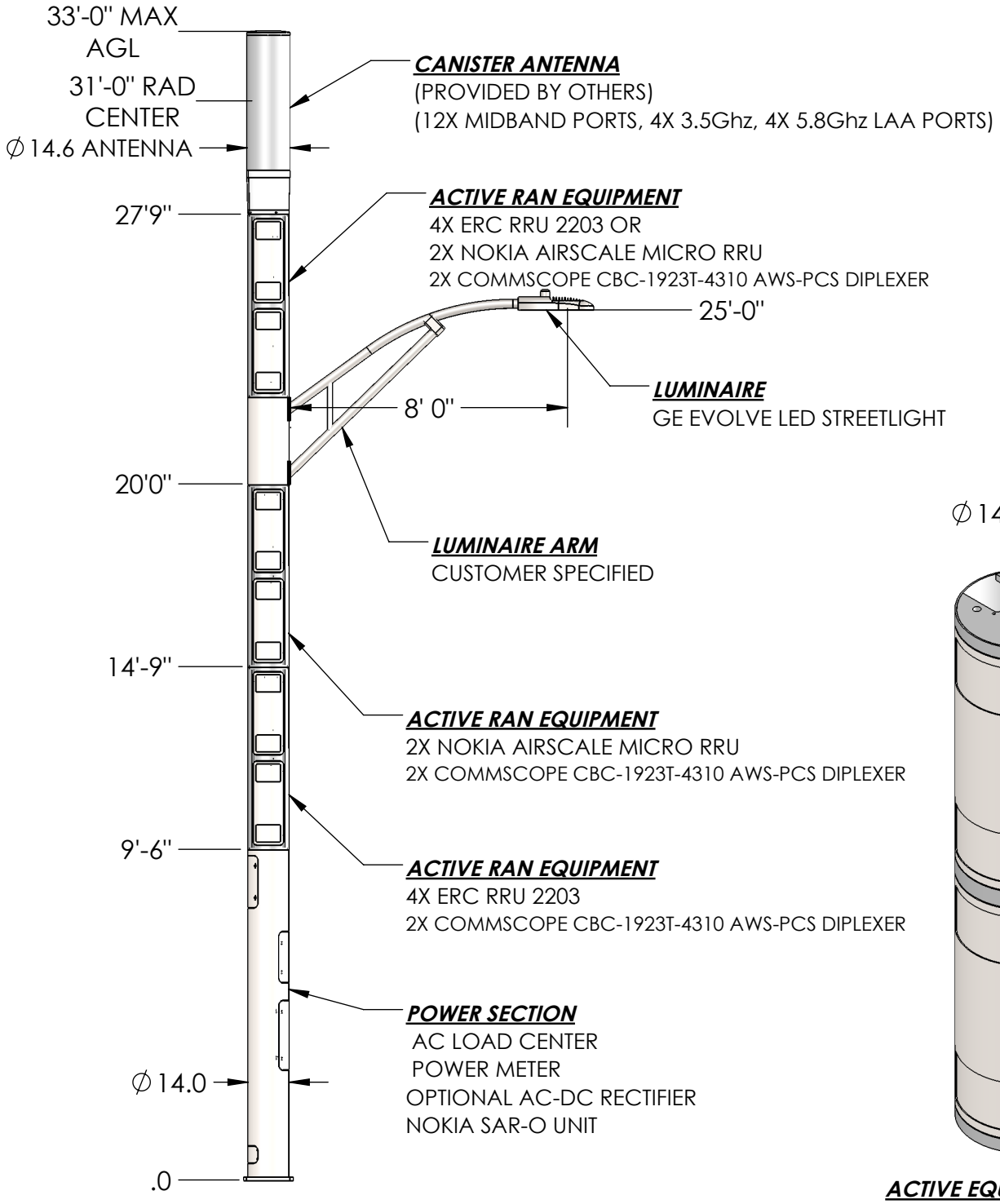

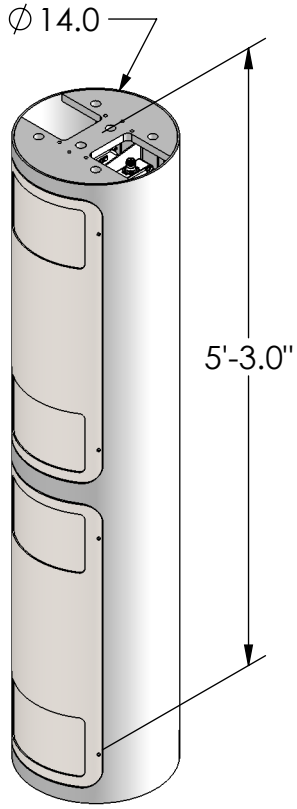

ACTIVE EQUIPMENT SECTION

	DRAWN BY:	SHEET:	PART NUMBER:
	CHECKED BY:	SCALE:	DESCRIPTION:
	DATE:	MATERIAL:	DRAWING TYPE:
	REVISION:	FINISH:	
DO NOT SCALE THIS PRINT		WEIGHT	

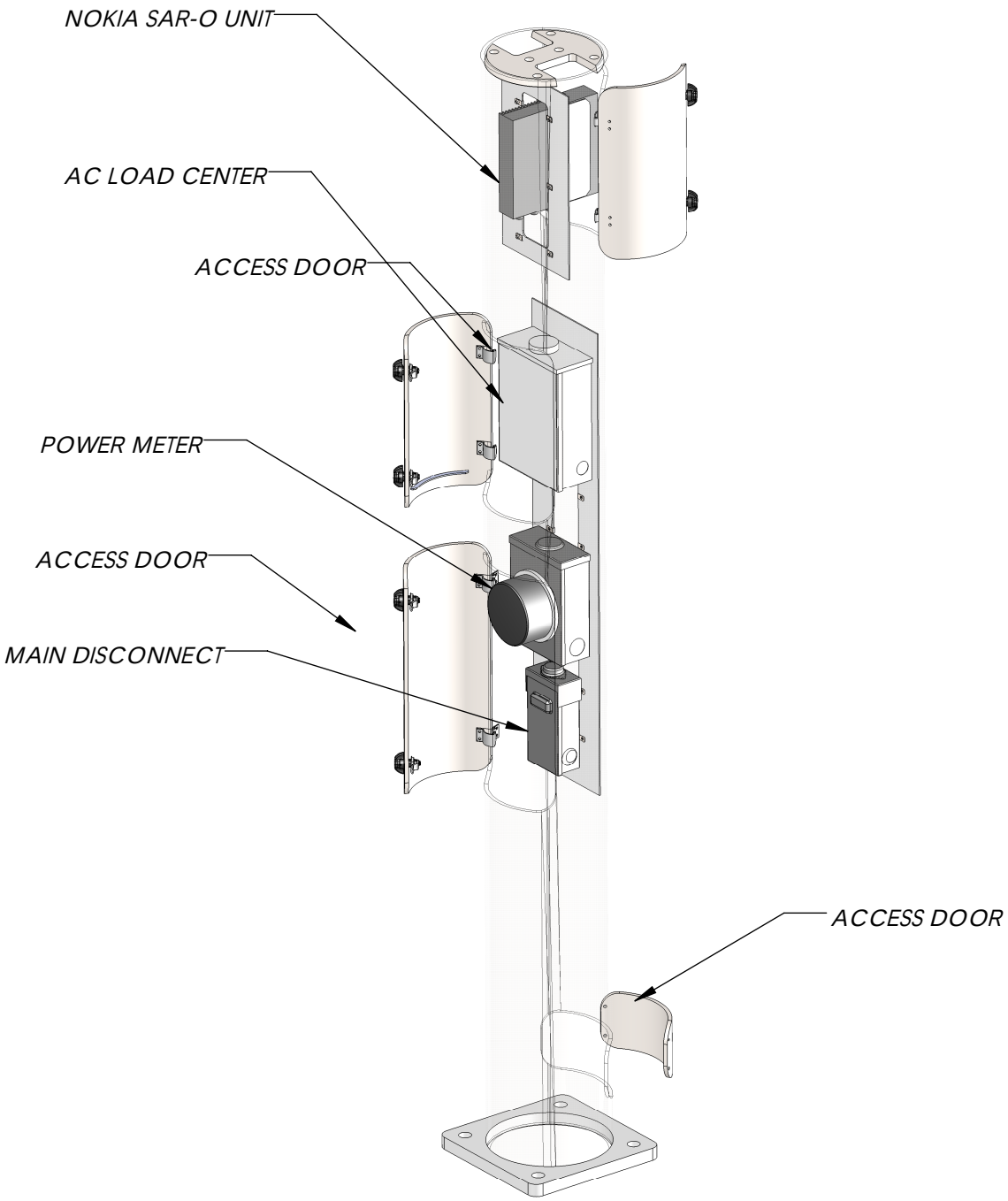

POWER SECTION

Qdaoaş`n]sıjcoş]j`şola_ebe_]pekjoş]naşpdaşlnklneap]nuşlnklanpu şkbş@kiiP_klaşfj_+ş]j`şi]uş^aşqoa`şkjhuşbknşpdaşola_ebe_ş lqnlkoaş]qpdkneva`şıjşsnepejcş^uş@kiiP_klaşfj_+	AO>TKş?V? JGM	PEBBQ? /şkbş3	M>OQşKRJ?BO? **SSC-760239359N936**
>IIşAFJBKPFLKPş>OBşFKşFK@EBPşR+L+P+ QLIBO>K@BPşRKIBPPşLQEBOTFPBşPMB@FCFBA? +Uşş:ş¦ +./ >KDIBPş ¦/¥ +UUş:ş¦ +-3 CO>@QFLKPş ¦.,0/ +UUU:ş¦ +-0. OBJLSBş?ROOPş>KAş?OB>HşBADBPş+--2	@EB@HBAş?V?	P@>IB? KQP	ABP@OIMQ?LK? METRO CELL, INT POLE SOLN, PICO, CC, LAA 36FT - AMP
	A>QB?	J>QBO>I?	AO>TKDşQVMB?
ALşKLQşP@>IBşQEFPşMOFKQ	OBSFPFLK? A	CKIPE? TBIDEQ **	COMMSCOPE®

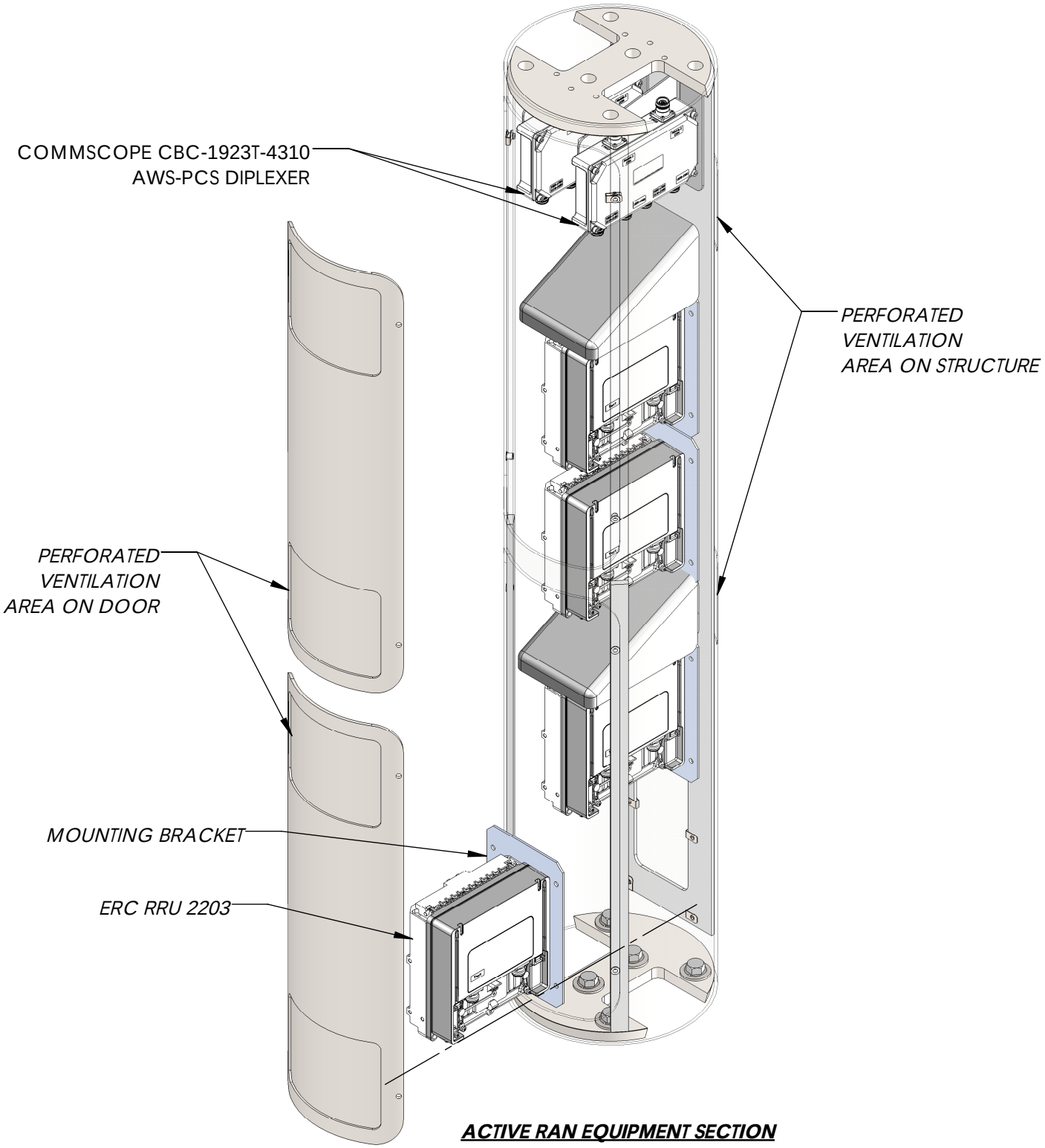

ACTIVE RAN EQUIPMENT SECTION

ERC RRU 2203 OPTION

Qdaoaş`n]sıjcoş]j`şola_ebe_]pekjoş]naşpdaşlnklneap]nuşlnklanpu şkbş@kiiP_klaşfj_+ş]j`şi]uş^aşqoa`şkjhuşbknşpdaşola_ebe_ş lqnlkoaş]qpdkneva`şıjşsnepejcş^uş@kiiP_klaşfj_+	AO>TKş?V? JGM	PEBBQ? Oşkbş3	M>OQşKRJ?BO? **SSC-760239359N936**
>IIşAFJBKPFLKPş>OBşFKşFK@EBPşR+L+P+ QLIBO>K@BPşRKIBPPşLQEBOTFPBşPMB@FCFBA? +Uşş:ş¦ +./ >KDIBPş ¦/¥ +UUş:ş¦ +-3 CO>@QFLKPş ¦.,0/ +UUU:ş¦ +-0. OBJLSBş?ROOPş>KAş?OB>HşBADBPş+--2	@EB@HBAş?V?	P@>IB? KQP	ABP@OIMQ?LK? METRO CELL, INT POLE SOLN, PICO, CC, LAA 36FT - AMP
	A>QB?	J>QBO>I?	AO>TKDşQVMB?
ALşKLQşP@>IBşQEFPşMOFKQ	OBSFPFLK? A	CKIPE? TBIDEQ **	COMMSCOPE®

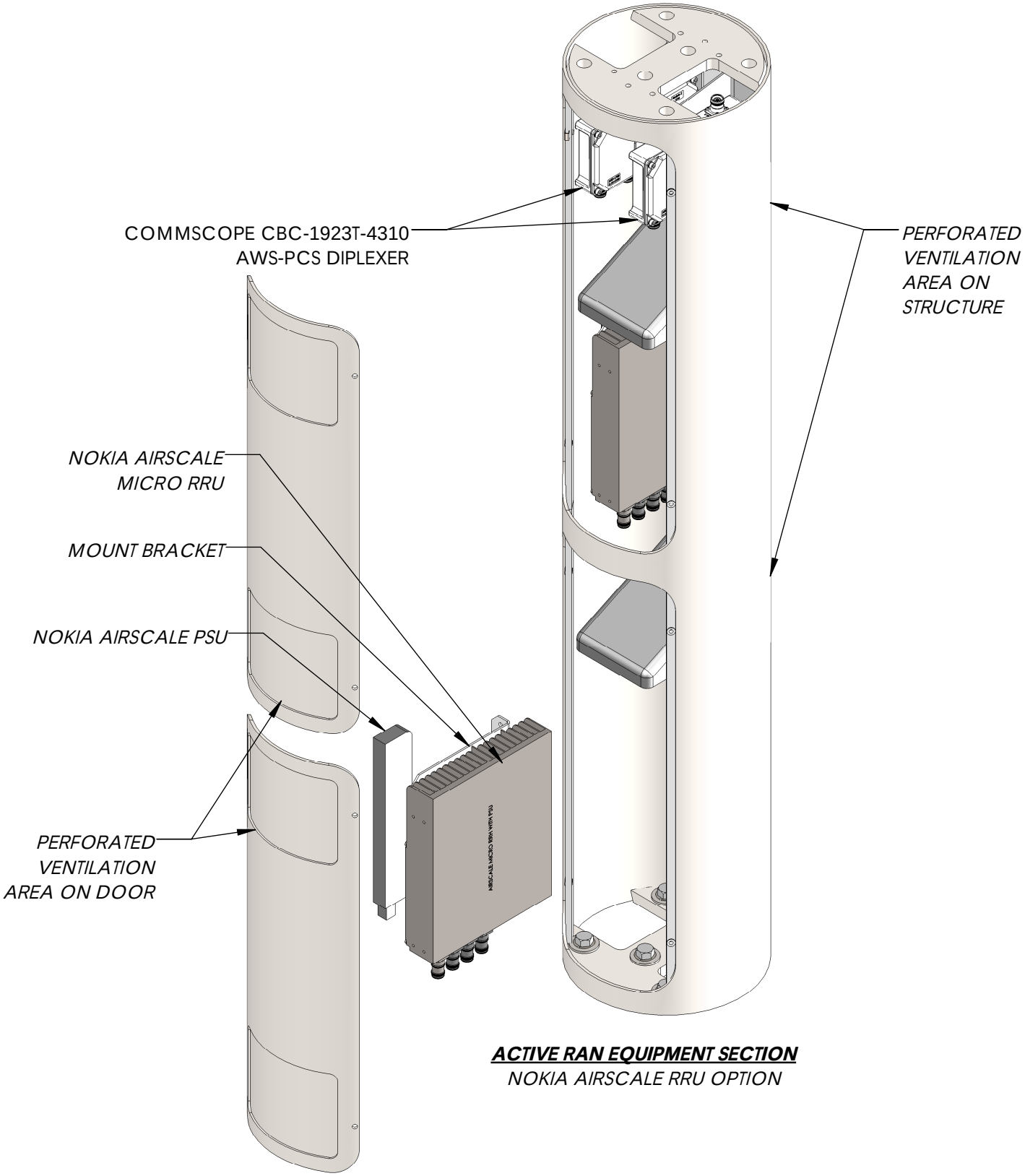

ACTIVE RAN EQUIPMENT SECTION

NOKIA AIRSCALE RRU OPTION

Qdaoaş`n]sıjcoş]j`şola_ebe_]pekjoş]naşpdaşlnklneap]nuşlnklanpu şkbş@kiiP_klaşfj_+ş]j`şi]uş^aşqoa`şkjhuşbknşpdaşola_ebe_ş lqnlkoaş]qpdkneva`şıjşsnepejcş^uş@kiiP_klaşfj_+	AO>TKş?V? JGM	PEBBQ? 1şkbş3	M>OQşKRJ?BO? **SSC-760239359N936**
>IIşAFJBKPFLKPş>OBşFKşFK@EBPşR+L+P+ QLIBO>K@BPşRKIBPPşLQEBOTFPBşPMB@FCFBA? +Uşş:ş¦ +./ >KDIBPş ¦/¥ +UUş:ş¦ +-3 CO>@QFLKPş ¦.,0/ +UUU:ş¦ +-0. OBJLSBş?ROOPş>KAş?OB>HşBADBPş+--2	@EB@HBAş?V?	P@>IB? KQP	ABP@OIMQ?LK? METRO CELL, INT POLE SOLN, PICO, CC, LAA 36FT - AMP
	A>QB?	J>QBO>I?	AO>TFKDşQVMB?
ALşKLQşP@>IBşQEFPşMOFKQ	OBSFPFLK? A	CKIPE? TBIDEQ **	COMMSCOPE®

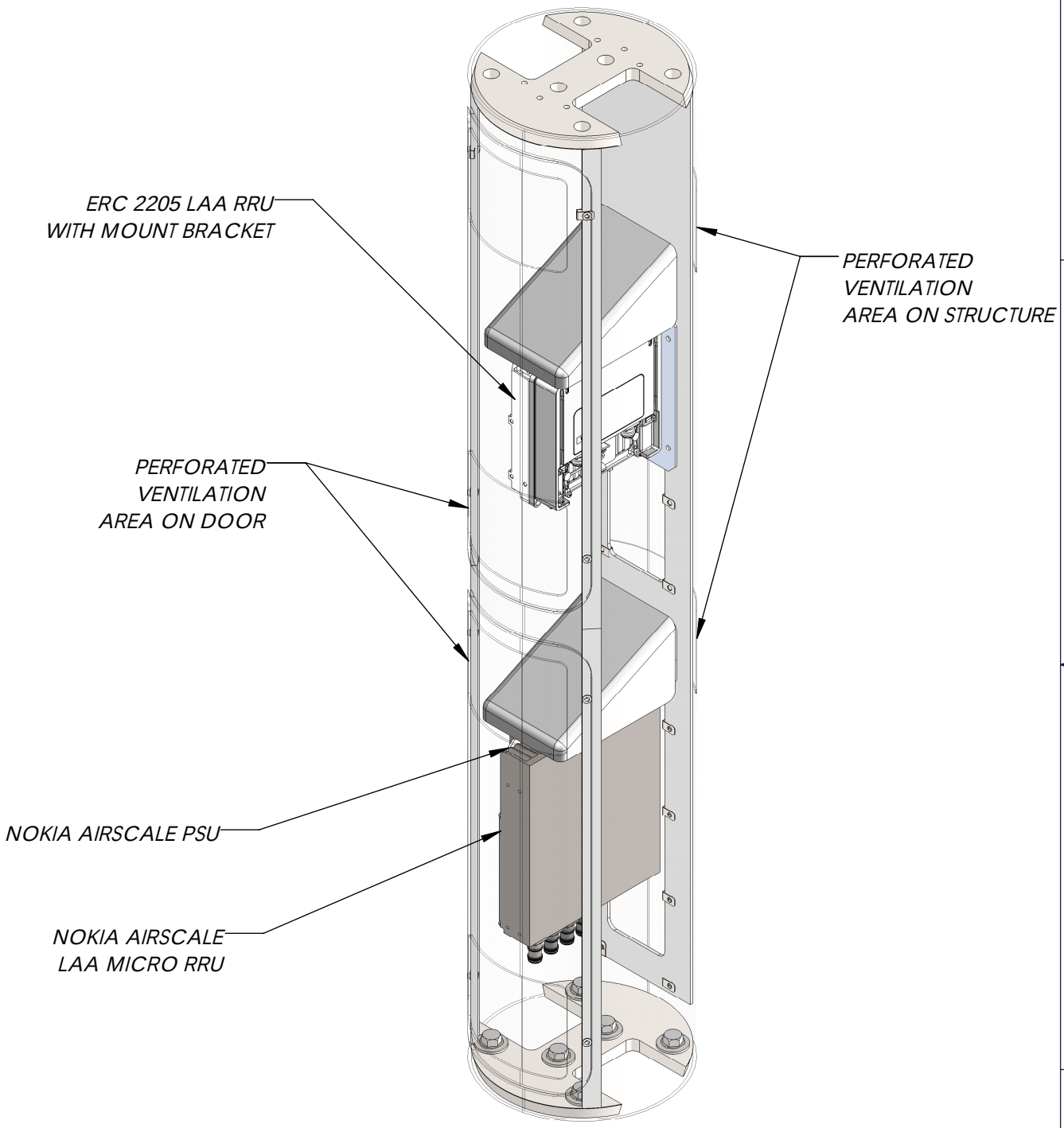

ACTIVE RAN EQUIPMENT SECTION

LLA OPTION

Qdaoaş`n]sıjcoş]j`şola_ebe_]pekjoş]naşpdaşlnklneap]nuşlnklanpu şkbş@kiiP_klaşfj_+ş]j`şi]uş^aşqoa`şkjhuşbknşpdaşola_ebe_ş lqnlkoaş]qpdkneva`şıjşsnepejcş^uş@kiiP_klaşfj_+	AO>TKş?V? JGM	PEBBQ? 2şkbş3	M>OQşKRJ?BO? **SSC-760239359N936**
>IIşAFJBKPFLKPş>OBşFKşFK@EBPşR+L+P+ QLIBO>K@BPşRKIBPPşLQEBOTFPBşPMB@FCFBA? +Uşş:ş¦ +./ >KDIBPş ¦/¥ +UUş:ş¦ +-3 CO>@QFLKPş ¦.,0/ +UUU:ş¦ +-0. OBJLSBş?ROOPş>KAş?OB>HşBADBPş+--2	@EB@HBAş?V?	P@>IB? KQP	ABP@OMQ?LK? METRO CELL, INT POLE SOLN, PICO, CC, LAA 36FT - AMP
	A>QB?	J>QBO>I?	AO>TKDşQVMB?
ALşKLQşP@>IBşQEFPşMOFKQ	OBSFPFLK? A	CKIPE? TBIDEQ * *	COMMSCOPE®

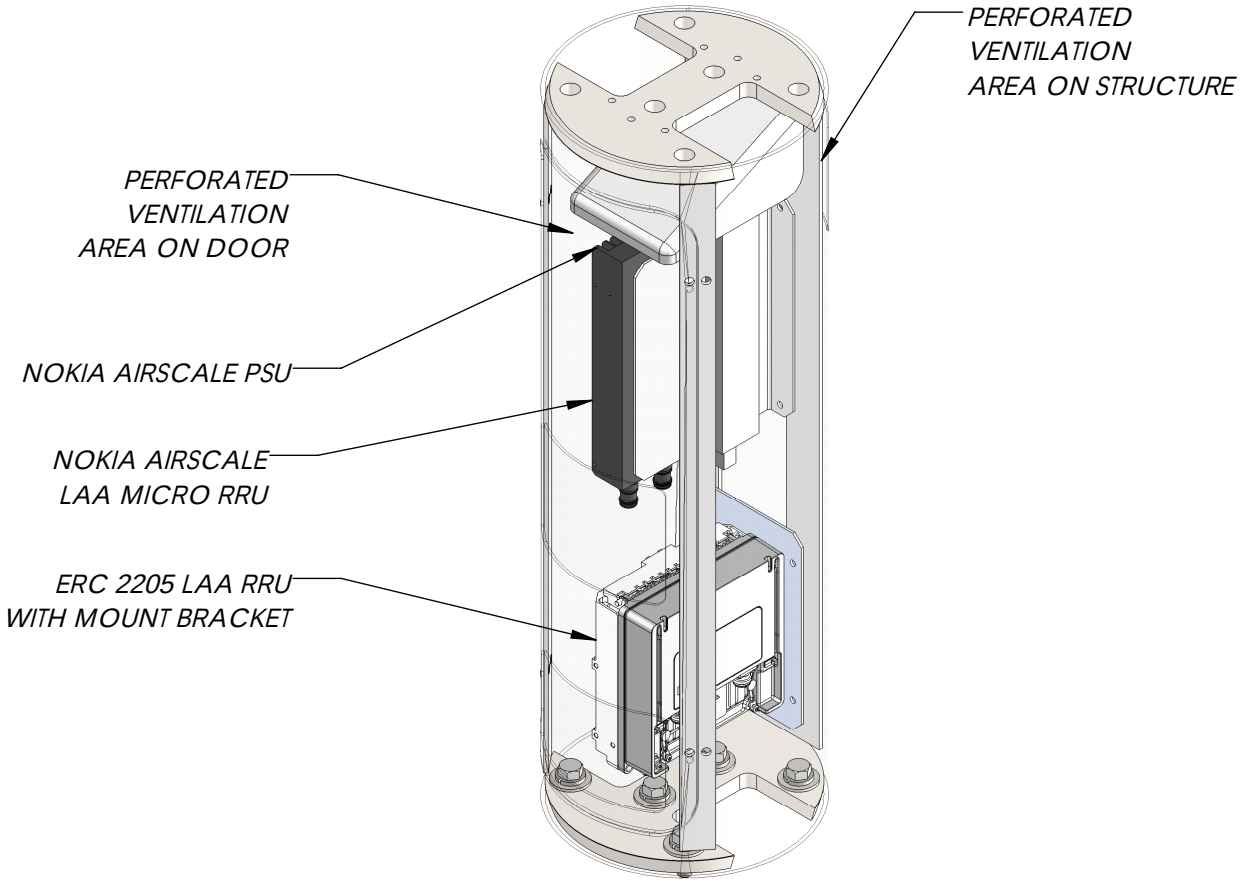

ACTIVE RAN EQUIPMENT SECTION

SHORT SECTION

Qdaoaş`n]sıjcoş]j`şola_ebe_]pekjoş]naşpdaşlnklneap]nuşlnklanpu şkbş@kiiP_klaşfj_+ş]j`şi]uş^aşqoa`şkjhuşbknşpdaşola_ebe_ş lqnlkoaş]qpdkneva`şıjşsnepejcş^uş@kiiP_klaşfj_+	AO>TKş?V? JGM	PEBBQ? 3şkbş3	M>OQşKRJ?BO? **SSC-760239359N936**
>IIşAFJBKPFLKPş>OBşFKşFK@EBPşR+L+P+ QLIBO>K@BPşRKIBPPşLQEBOTFPBşPMB@FCFBA? +Uşş:ş¦ +./ >KDIBPş ¦/¥ +UUş:ş¦ +-3 CO>@QFLKPş ¦.,0/ +UUU:ş¦ +-0. OBJLSBş?ROOPş>KAş?OB>HşBADBPş+--2	@EB@HBAş?V?	P@>IB? KQP	ABP@OMQ?LK? METRO CELL, INT POLE SOLN, PICO, CC, LAA 36FT - AMP
	A>QB?	J>QBO>I?	AO>TFKDşQVMB?
ALşKLQşP@>IBşQEFPşMOFKQ	OBSFPFLK? B	CKIPE?	COMMSCOPE®
		TBIDEQ **	

C241-GR484
Dark Gray Fine Texture Semi-Gloss

C241-GR07
Gray Fine Texture Semi-Gloss

C241-GR305
Bay Gray Fine Texture Semi-Gloss

T243-GR522
Flint Gray Fine Texture Semi-Gloss

T241-GR11
Platinum Gray Fine Texture Semi-Gloss

T031-WH06
Pearl White Fine Texture Semi-Gloss

T243-GR301
Quartz Gray Fine Texture Semi-Gloss

T241-GR142
Light Gray Fine Texture Semi-Gloss

T241-BG137
Beige Fine Texture Semi-Gloss

T375-BK07
Copper Vein Semi-Gloss*

T375-BK10
Gold Vein Semi-Gloss*

T375-BK26
Silver Vein Semi-Gloss*

T075-WH34
Black/White Vein Semi-Gloss

T064-BR24
Bronze Hammertone Semi-Gloss

T064-GR660
Gray Hammertone Semi-Gloss

T064-GR05
Silver Hammertone Semi-Gloss

T064-BL95
Blue Hammertone Semi-Gloss

T064-GN81
Green Hammertone Semi-Gloss

C013-GR08
Gray Hammer Semi-Gloss

T013-BG38
Beige Hammer Semi-Gloss

T012-WH260
White Hammer Semi-Gloss

T013-WH09
White Hammer Semi-Gloss

T025-BR01
Bronze Pearlescent 50% Gloss

T028-GR02
Steel Gray Pearlescent 80% Gloss

T353-YL02
Brass 30% Gloss*

T357-GR105
Silver Metallic 70% Gloss*

T353-GR06
Silver Metallic 30% Gloss*

T358-GR539
Chrome 80% Gloss*

T391-BG290
Metallic Bronze Semi-Gloss Texture*

T091-GR309
Mock Rock Texture Semi-Gloss

C291-GN20
Patina Texture Semi-Gloss

T091-GN57
Verdigris Texture Semi-Gloss

T091-BR47
Rust Texture Semi-Gloss

C241-BK303
Black Fine Texture Low-Gloss

C081-BK176
Black Wrinkle Semi-Gloss

E311-BK04
Black Hammer Low-Gloss**

T013-BK62
Black Hammer Semi-Gloss

T032-BR62
Brown Fine Texture Semi-Gloss

P004-BR23
Bronze 40% Gloss

P004-GR09
ANSI #49 Gray 40% Gloss

P004-GR16
ANSI #61 Gray 40% Gloss

H305-GR10
Light Gunmetal Gray 50% Gloss**

P003-GR01
Gray #26307 30% Gloss

H303-WH16
Antique White 30% Gloss**

P005-WH01
White #27875 50% Gloss

T002-WH08
White 20% Gloss

T008-GR736
Gray ANSI 61 80% Gloss

P008-GR21
RAL 7042 Gray 80% Gloss

T009-GR230
RAL 7035 Gray 90% Gloss

T009-WH13
White 90% Gloss

P009-WH14
White 90% Gloss

H309-WH27
Frost White 90% Gloss**

T032-BG03
Beige Texture Semi-Gloss

T032-WH15
White Texture Semi-Gloss

C031-WH120
White Texture Semi-Gloss

T009-BG16
Designer Beige 90% Gloss

P009-BG02
Beige 90% Gloss

T009-BG01
Almond 90% Gloss

H308-WH25
White 80% Gloss••

P009-WH04
White 90% Gloss

T009-WH11
White 90% Gloss

T009-WH12
Hi-Reflective White 90% Gloss

T007-WH121
White 70% Gloss

E305-GR533
Gray Primer 50% Gloss**

E305-WH243
White Primer 50% Gloss **

H304-GR312
Anti-Gassing Primer 40% Gloss**

NEW **E396-GR1372**
Zinc Rich Primer

If a clear topcoat finish is preferred
T209-CL01 90% Gloss Clear TGIC Polyester
T002-CL02 20% Gloss Clear TGIC Polyester

The samples on this card are representative only and vary slightly from actual gloss, color and texture.

GE
(General Electric)

LED Cobra Head Lights
(spec's)

Ordering Number Logic

Scalable Specification Grade Cobrahead (ERS2)

ERS2 ____ _ __ __ _ __ _ ____ __

PROD. ID	VOLTAGE	OPTICAL CODE	PHOTOMETRIC TYPE	DRIVE CURRENT	LED COLOR TEMP	PE FUNCTION	COLOR	OPTIONS
E = Evolve R = Roadway S = Scalable 2 = Double Module Optical Assembly	0 = 120-277 1 = 120 2 = 208 3 = 240 4 = 277 H = 347-480 D = 347 5 = 480	Product Tier *3 = Specification Grade See Charts for all levels	A1 = Extra Narrow Asymmetric B1 = Narrow Asymmetric (Medium) C1 = Asymmetric (Short) D1 = Asymmetric Forward E1 = Asymmetric (Medium)	5 = 525mA 7 = 700mA 1 = 1050mA	40 = 4000K 50 = 5000K* NOTE: For 1050mA drive current, nominal color temperature (CCT) = 5300K	1 = None 2 = PE Rec 4 = PE Rec with Shorting Cap 5 = PE Rec with Control 7 = GE Dimming 5-Pin PE Receptacle *† 9 = GE Dimming 5-Pin PE Receptacle with Shorting Cap *† † When ordering PE function socket 7 or 9, a dimming driver add after dimming driver (D=Dimming) must also be ordered under the "OPTIONS" column * Order dimming control PE as a separate item NOTE: A= ANSIC136.41 7-Pin dimming receptacle, contact manufacturer	BLCK = Black GRAY = Gray	B = Internal Bubble level D = Dimming* F = Fusing G = External Bubble Level L = Tool-Less Entry R = Additional Secondary Surge Protection Device T = GE Energy Extreme Surge Protection per IEEE/ANSI C62.41.2-2002. - Rating 1 - 10kV/5kA Location Category (120 events). - Rating 2 - 6kV/3kA Location Category C-Low (5000 events). XXX = Special Options * When ordering Dimming PE Receptacle 7, 9 or A, D=Dimming driver must be selected under "OPTIONS" column NOTE: If no dimming receptacle under PE Function is selected and D=Dimming is selected under OPTIONS, 0-10v dimming leads will be provided with access through slip/fitter opening in unit

525 mA					TYPICAL SYSTEM WATTAGE	TYPICAL INITIAL LUMENS					TYPICAL INITIAL LPW		IES FILE NUMBERS	
PRODUCT ID	OPTICAL CODE	PHOTO-METRIC TYPE	DRIVE CURRENT		120-277V	4000K	5000K	B RATING	U RATING	G RATING	4000K	5000K	4000K	5000K
ERS2	D3	A1	525mA		88	8000	8000	2	0	2	91	91	456404	456429
ERS2	E3		525mA		99	9100	9100	3	0	2	92	92	456405	456430
ERS2	F3		525mA		112	10300	10300	3	0	2	92	92	456406	456431
ERS2	G3		525mA		125	11500	11500	3	0	2	92	92	456407	456432
ERS2	H3		525mA		138	12700	12700	3	0	3	92	92	456408	456433
ERS2	D3	B1	525mA		88	8200	8200	2	0	1	93	93	456409	456434
ERS2	E3		525mA		99	9300	9300	2	0	1	94	94	456410	456435
ERS2	F3		525mA		112	10600	10600	3	0	2	95	95	456411	456436
ERS2	G3		525mA		125	11800	11800	3	0	2	94	94	456412	456437
ERS2	H3		525mA		138	13000	13000	3	0	2	94	94	456413	456438
ERS2	D3	C1	525mA		88	8200	8200	2	0	1	93	93	456414	456439
ERS2	E3		525mA		99	9300	9300	3	0	1	94	94	456415	456440
ERS2	F3		525mA		112	10600	10600	3	0	1	95	95	456416	456441
ERS2	G3		525mA		125	11800	11800	3	0	2	94	94	456417	456442
ERS2	H3		525mA		138	13000	13000	3	0	2	94	94	456418	456443
ERS2	D3	D1	525mA		88	8000	8000	2	0	1	91	91	456419	456444
ERS2	E3		525mA		99	9100	9100	2	0	2	92	92	456420	456445
ERS2	F3		525mA		112	10300	10300	2	0	2	92	92	456421	456446
ERS2	G3		525mA		125	11500	11500	2	0	2	92	92	456422	456447
ERS2	H3		525mA		138	12700	12700	3	0	2	92	92	456423	456448
ERS2	D3	E1	525mA		88	8200	8200	2	0	3	93	93	456424	456449
ERS2	E3		525mA		99	9300	9300	2	0	2	94	94	456425	456450
ERS2	F3		525mA		112	10600	10600	3	0	2	95	95	456426	456451
ERS2	G3		525mA		125	11800	11800	3	0	2	94	94	456427	456452
ERS2	H3		525mA		138	13000	13000	3	0	2	94	94	456428	456453

Cobra Head Light Fixture

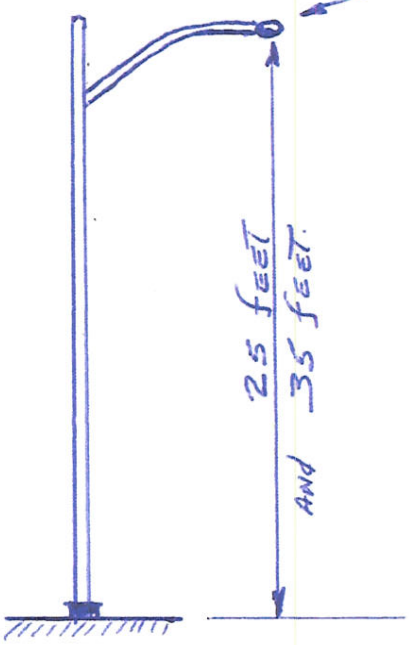

NOTES:
- Max Operating Ambient 50° C
- 347-480V Not Available
- For T Option Availability Contact Manufacturer

Lumen Maintenance

- Projected L92 (10K) ≥ 50,000 at Ta 25C
- Projected L70 (10K) > 100,000 at Ta 25C
  Based on 10,000h LM-80 data for Nichia 219B SQETMLH17005

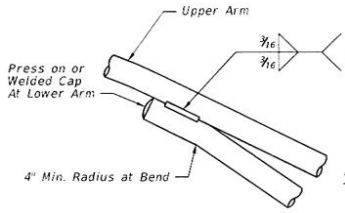

ARM CONNECTION DETAIL

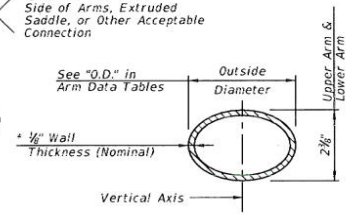

ARM SECTION

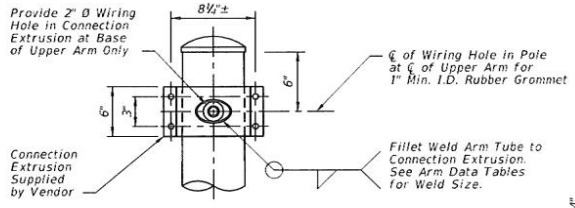

SECTION A-A
(Connection At Lower Arm Similar)

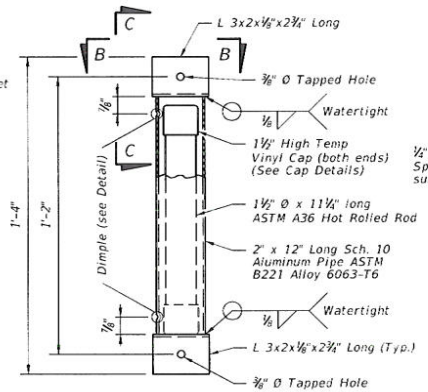

VIBRATION DAMPER ELEVATION

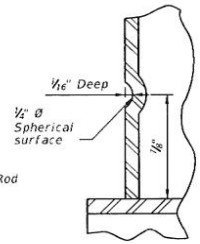

DIMPLE DETAIL

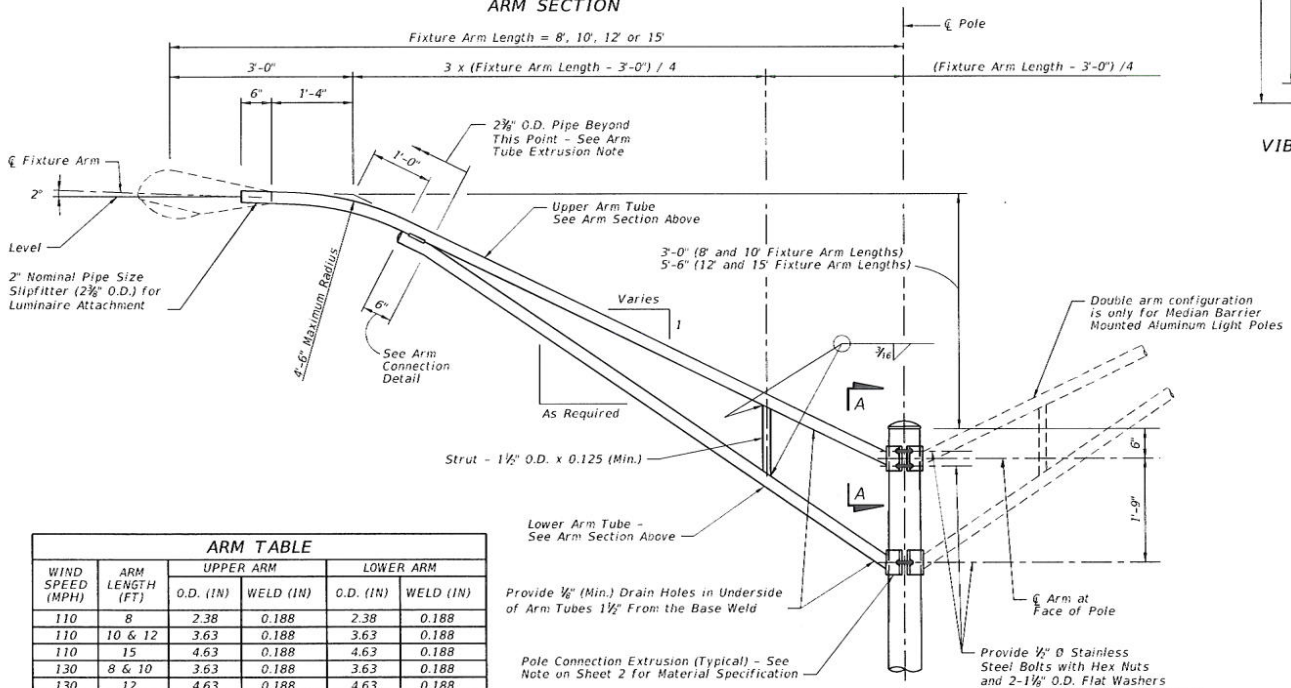

ARM ELEVATION

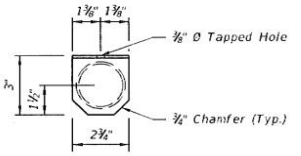

VIEW B-B

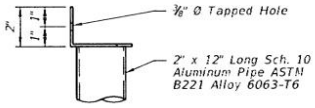

VIEW C-C

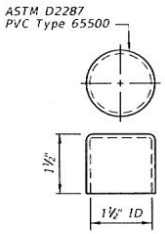

HIGH TEMP VINYL CAP DETAIL

ARM TABLE					
WIND SPEED (MPH)	ARM LENGTH (FT)	UPPER ARM		LOWER ARM	
		O.D. (IN)	WELD (IN)	O.D. (IN)	WELD (IN)
110	8	2.38	0.188	2.38	0.188
110	10 & 12	3.63	0.188	3.63	0.188
110	15	4.63	0.188	4.63	0.188
130	8 & 10	3.63	0.188	3.63	0.188
130	12	4.63	0.188	4.63	0.188
130	15	4.63	0.25	4.63	0.25
150	8	3.63	0.188	3.63	0.188
150	10	3.63	0.250	3.63	0.250
150	12	4.63	0.250	4.63	0.250
150	15	4.63	0.313	4.63	0.313

* Increase Member Wall Thickness as Necessary to Meet Minimum Requirements of the Welding Code for the Connection Weld Sizes Shown in the Arm and Pole Tables.

ARM TUBE EXTRUSIONS NOTES:

At the pole connections, provide arm tube extrusions with dimensions as shown in the ARM SECTION and as tabulated in the ARM DATA Tables. Uniformly transition elliptical section to a cylindrical section at the arm connection.

The fabricator may substitute elliptical cross sections other than those tabulated, provided the section properties about the vertical axis and the area of the section equal or exceed that of the required section, and provide minimum wall thickness of 1/8" nominal and within the Aluminum Association Tolerances.

The outside diameter about the minor axis should be held at 2 3/8" at the upper and lower arms.

ARM & DAMPER DETAILS