LEGEND
A = Arc
ASPH = Asphalt
BM = Bench Mark
BRG = Bearing
CB = Catch basin
CBS = Concrete Block Structure
CH = Chord
Chatta.= Chattahoochee
℄ = Center Line
CLF = Chain Link Fence
CL. = Clear
CONC.= Concrete
D = Delta
ø = Diameter
DH = Drill Hole
DME = Drainage & Maintenance Easement
E.B. = Electric Box
Enc. = Encroachment
F.F. = Finish Floor
F.H. = Fire Hydrant
F.I.R. = Found Iron Rebar
FPL = Florida Power & Light
F.I.P. = Found Iron Pipe
FD. = Found
L.P. = Light Pole
M = Measured
M.F. = Metal Fence
M.H. = Manhole
M̲ = Monument Line
MON. = Monument
N/A = Not Applicable
N/D = Nail & Disc
NTS = Not to Scale
O/S = Offset
O.U.L. = Overhead Utility Lines
OH = Overhang
P = Plat
PB = Plat Book
PC = Point of Curvature
PCP = Permanent Control Point
PG = Page
P.I. = Point of Intersection
℘ = Property Line
PL = Planter
P.O.B. = Point of Beginning
P.O.C. = Point of Commencement
P.P. = Power Pole
P.R.M. = Permanent Reference Monument
P.R.C. = Point of Reverse Curvature
PT = Point of Tangency
R = Radius
R/R = Railroad
PSM = Professional Surveyor Mapper
R/W = Right-of-Way
SWK = Sidewalk
Sec. = Section
(TYP) = Typical
T = Tangent
U.E. = Utility Easement
W.F. = Wood Fence
W.M. = Water Meter
W.V. = Water Valve
XXX = Denotes Spot Elevations Taken

NOTE:
a) All clearances and/or encroachments shown hereon are of the apparent nature, fence legal ownership not determined.
b) The issue of this survey is only for the exclusive and specific use of those persons, parties or institutions in the certification.
c) Code restrictions and title search not reflected in this survey
d) Underground utilities, improvements, footings and encroachments, if any not located.
e) The flood information shown hereon does not imply that the subject property will or will not be free from flooding or flood damage. This firm does not make any representation on the part of the firm or employee thereof, for any damage that occurs from reliance on said information.
f) Lands depicted hereon were surveyed per legal description provided by client and no claims as to ownership or matters of title are made or implied.
g) All roads shown hereon are public unless otherwise noted.
h) No identification can be found on property corners unless otherwise noted.
i) Distance along boundary are record and measured unless otherwise noted.
j) The graphic portions of this document are intended to be displayed at the graphic/name scales as depicted. Said scale may be altered in reproductions and as such, should be considered when obtaining scaled data.
k) Accuracy: The intended use of land as classified in the minimum technical standards (5J17-FAC), is "Suburban". The Minimum relative distance accuracy for the type of boundary survey is 1 foot in 7,500 feet. The accuracy obtained by measurement and calculation of a closed geometric figure was found to exceed this requirement.
l) Contact the appropriate authorities prior to any design work or excavation on the herein described parcel for building, zoning information and utilities location.

TREE CHART

#	DESCRIPTION	ø	HEIGHT	CANOPY
1	PALM	4.8"	15'	10'
2	PALM	4.8"	15'	10'
3	PALM	6"	20'	15'
4	PALM	6"	20'	12'
5	COCONUT PALM	12"	50'	12'
6	COCONUT PALM	8.4"	48'	18'
7	COCONUT PALM	8.4"	48'	18'
8	COCONUT PALM	10.8"	40'	15'
9	COCONUT PALM	10.8"	40'	15'
10	COCONUT PALM	10.8"	40'	15'
11	COCONUT PALM	10.8"	40'	18'
12	COCONUT PALM	10.8"	40'	18'
13	COCONUT PALM	24"	20'	18'
14	COCONUT PALM	24"	20'	12'
15	COCONUT PALM	8.4"	20'	15'
16	COCONUT PALM	8.4"	20'	15'
17	COCONUT PALM	8.4"	20'	15'
18	PALM	24"	10'	6'
19	COCONUT PALM	8.4"	20'	15'
20	COCONUT PALM	8.4"	20'	15'
21	COCONUT PALM	8.4"	20'	15'
22	COCONUT PALM	10.8"	20'	15'
23	COCONUT PALM	10.8"	20'	15'
24	COCONUT PALM	10.8"	20'	15'
25	COCONUT PALM	8.4"	15'	10'
26	COCONUT PALM	8.4"	15'	10'
27	COCONUT PALM	8.4"	20'	16'
28	COCONUT PALM	8.4"	20'	16'
29	COCONUT PALM	8.4"	20'	16'
30	PALM	24"	50'	10'
31	HEDGE	6"	15'	4'
32	HEDGE	6"	15'	4'
33	HEDGE	6"	15'	15'
34	HEDGE	6"	15'	4'

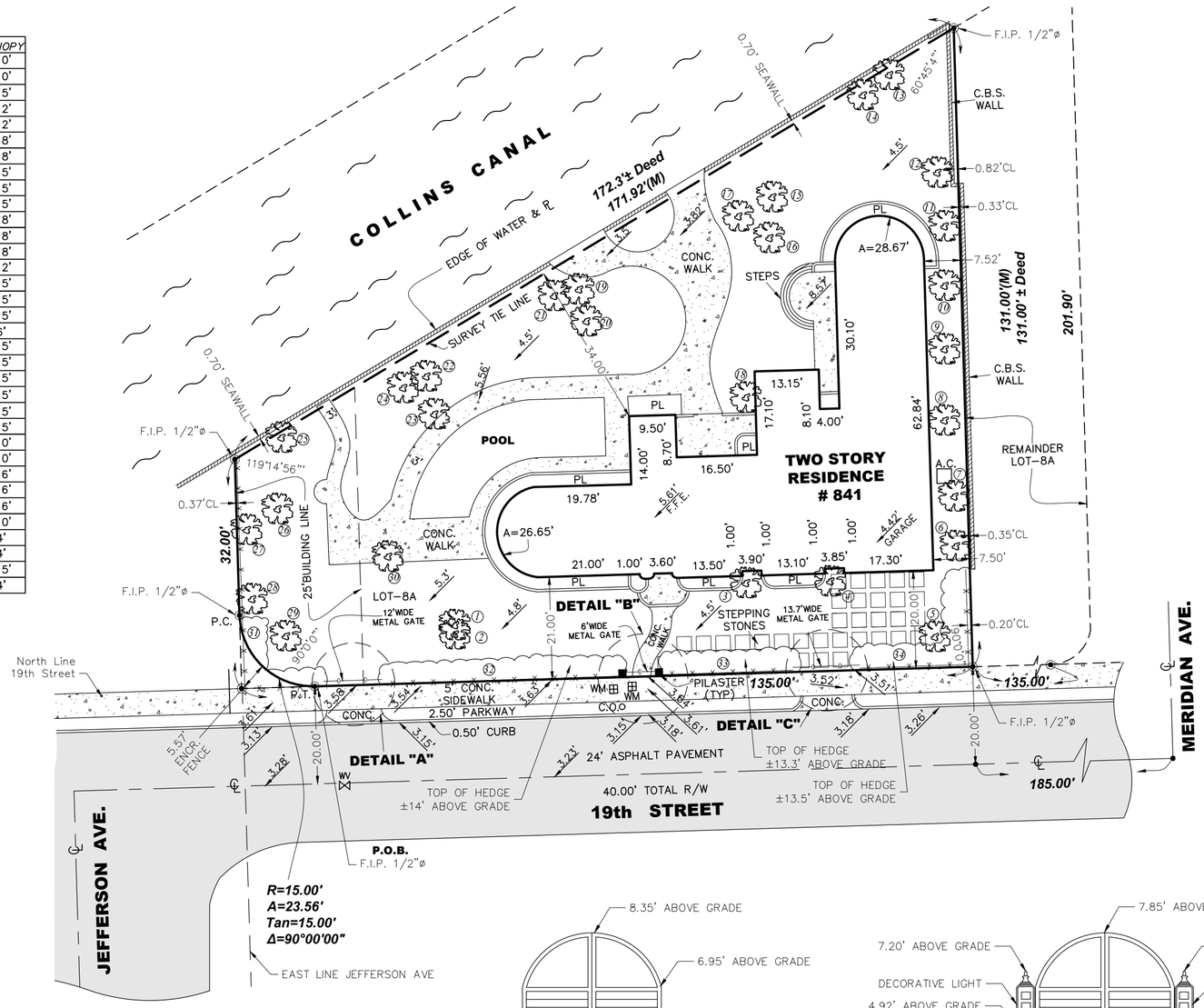

GRAPHIC SCALE
0 10 20 40 80
Scale: 1"=20'
(Scale in feet)

This property described as:
The west 112 of block 8-A of"Arnended Plat of Golf Course Subdivision", according to the plat thereof, as recorded in Plat Book 6, at Page 26, of the Public Records of Miami-Dade County, Florida, more particularly described as follows:
From a concrete monument situated at the northwest comer of Lincoln road and Jefferson avenue, said monument being 1350.00 feet East and 270.00 feet North of the Southwest comer of the Northwest one quarter of Section 34, Township 53 South, Range 42 East as recorded on a plat entitled amended plat of Golf Course Subdivision and recorded in Plat Book 6, Page 26, Public Records of Miami-Dade County,
Florida, run easterly along the North line of Lincoln road, a distance of 70.00 feet to a point, said point being the intersection of the north line of Lincoln road with the east line of Jefferson avenue, thence run north, along the east line of Jefferson avenue a distance of 1550.0 feet to a point, said point being the intersection of the east line of Jefferson avenue with the north line of nineteenth street, thence deflect 90
degrees to the right and run easterly along the north line of nineteenth street a distance of 15.00 feet to the point of tangency of a circular curve, said point of tangency being the point of beginning of the tract herein described:
From the point of beginning continue east along the north line of nineteenth street a distance of 135 feet to a point, thence deflection 90 degrees to the left run north along a line parallel to and 150.00 feet easterly from the east line of Jefferson avenue, a distance of 131.0 feet plus or minus to the bulkhead on the south side of Collins canal, thence run in a southwesterly direction along the bulkhead on the south
line of Collins canal a distance of 172.3 feet plus or minus to a point, said point being the intersection of the bulkhead on the south side of Collins canal with the east line of Jefferson avenue, thence run in a southerly direction along the east line of Jefferson Avenue a distance of 32.1 feet plus or minus to the point of curve of a circular curve having a radius of 15.00 feet, thence run along the arc of a circular curve deflection to the left, having for its elements a radius of 15.0 feet, and a central angle of 90 degrees, a distance of 23.56 feet to the point of tangency also being the point of beginning of the tract herein described.

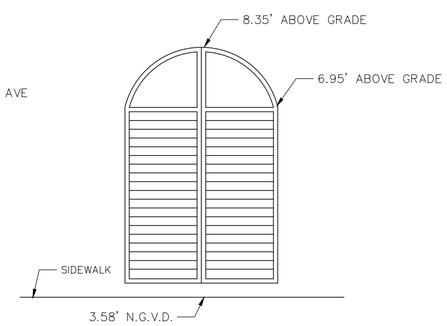

DETAIL "A"
NOT TO SCALE

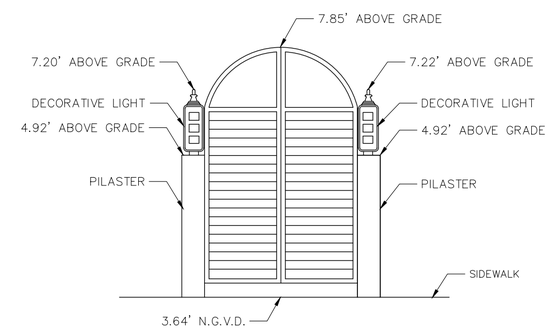

DETAIL "B"
NOT TO SCALE

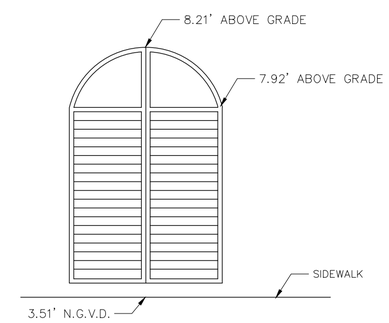

DETAIL "C"
NOT TO SCALE

NOTES:
Elevations Show refer to NGVD 1929
BM # Y-310-R (Miami-Dade)
Elevation = 5.62 ft (N.G.V.D.)

Certified to:
CJB Buena Vista LLC

Address:
841 19th Street, Miami Beach, FL 33139

"THIS SURVEY DECLARATION IS MADE ON THE FIELD DATE INDICATED, TO THE OWNER(S) LISTED. IT IS NOT TRANSFERABLE TO ADDITIONAL INSTITUTIONS OR SUBSEQUENT OWNERS."

Bearing, if any, shown based on N/A (reference) N/A

REVISIONS:
TREE SURVEY 06/22/2017
ELEVATIONS ADDED 08/28/2017
ELEVATIONS ADDED 10/20/2017

FLOOD ZONE	COMM. No.	PANEL No.	SUFFIX:	Not valid unless it bears the signature and the original raised seal of Florida licensed Surveyor and Mapper.
AE	120651	0317	L	
F.I.R.M.DATE	F.I.R.M.INDEX	BASE ELEV.		
09 / 11 / 09	09 / 11 / 09	+ 8 FT N.G.V.D.		

TOPOGRAPHIC SURVEY.
I HEREBY CERTIFY: that this survey meets the standards of practice as set forth by the FLORIDA BOARD OF PROFESSIONAL SURVEYORS AND MAPPERS in chapter 5J-17, Florida Administrative Code, pursuant to Section 472.027 Florida Statutes.

RENE AIGUESVIVES 05/16/17
PROFESSIONAL SURVEYOR AND MAPPER No. 4327. State of Florida.

Alvarez, Aiguesvives and Associates, Inc.
Surveyors, Mappers and Land Planners
9789 Sunset Drive, Miami, FL 33173
Phone 305.220.2424 Fax 305.552.8181
L.B. No. 6867 / E-mail: aaasurvey@aol.com

Field Date	Scale:	Drawn by:	Drwg. No.
05/11/17	1"=20'	R.S.	17-19209