DRB18-0234

SMALL-CELL LIGHT POLE PROJECTS

City of Miami Beach - Board Applications

MOBILITIE CANDIDATE #

9FLB000962/MI90XS507F

Approximate Address: 948 Normandy Drive, Miami Beach, Fl 33141
CAP Address: 946 Normandy Drive, Miami Beach, Fl 33141

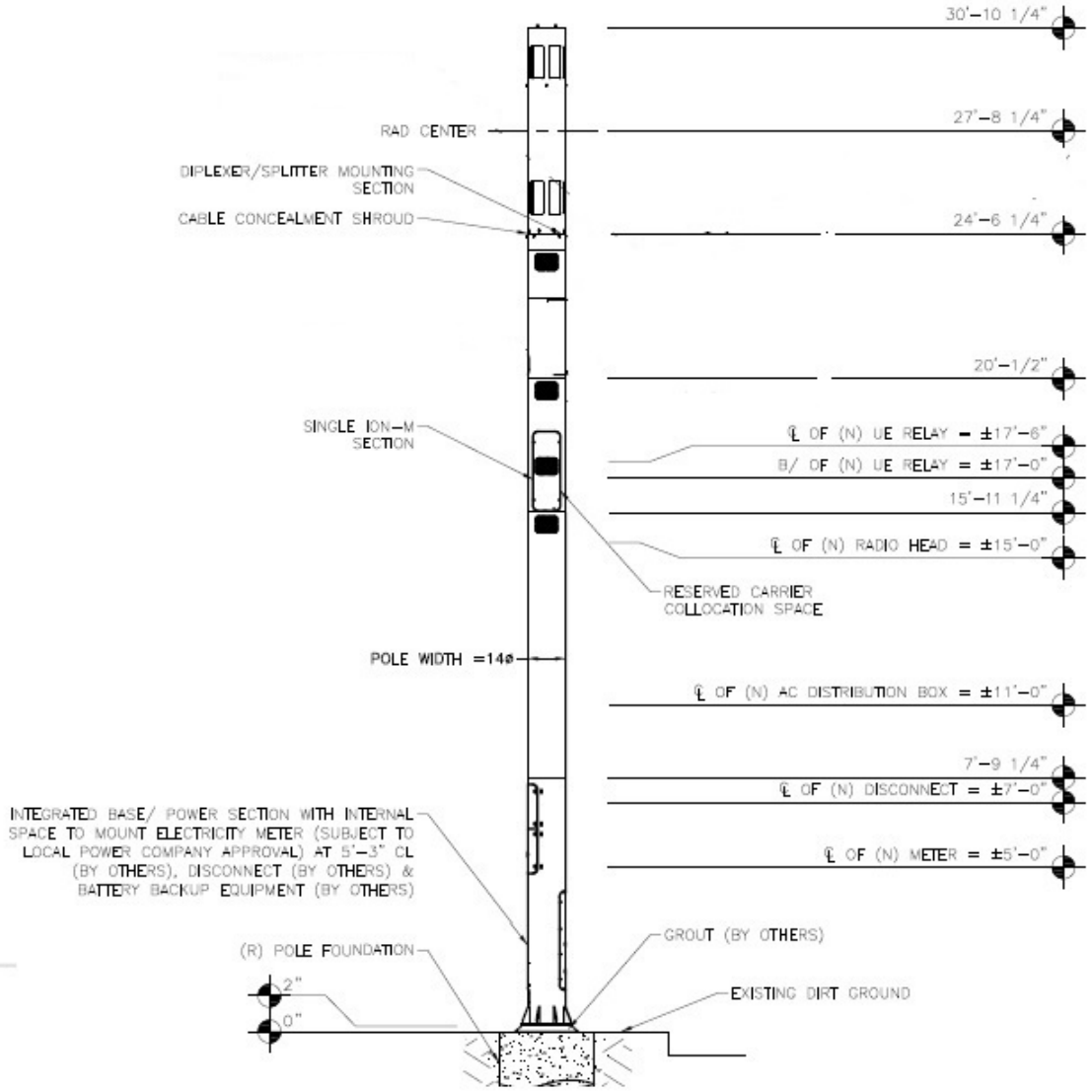

ITEM # 2—COPY OF SIGNED AND DATED CHECKLIST

MIAMIBEACH

Planning Department, 1700 Convention Center Drive 2nd Floor
Miami Beach, Florida 33139, www.miamibeachfl.gov
305.673.7550

DRB

Property address: – MOBILITE – **Board:** 10·23·2017 **Date:** _____

BOARD APPLICATION CHECK LIST

A Pre-Application meeting must be scheduled via CAP to obtain a plan case number and for board staff review of all submittals.

Pre-Application meetings for applications that do not require a traffic study are scheduled on a first come-first served basis and must occur no later that five(5) business days prior to CAP First submittal.

Applications requiring a traffic study must meet with Planning, Transportation, and peer reviewer sixty (60) days* prior to First submittal deadline to determine the methodology for the traffic impact study. This meeting is considered the "Pre-Application meeting" and must be scheduled via CAP to obtain a plan case number for review and payment of fees. Thirty (30) days before First submittal, applicant must provide the traffic study via CAP (see Transportation Department's requirements check list). The Transportation Department/Peer Reviewer will submit first round of comments 15 days prior to First submittal. Applicant must address comments and submit revised traffic study/plans for CAP First submittal deadline.

Incomplete, or submittals found to be insufficient will not be placed on a Board agenda.

ITEM #	**FIRST SUBMITTAL (VIA CAP) **** **To be uploaded online (CAP) by the applicant before 5:00 pm by First submittal deadline.** **ALL PLANS MUST BE DIMENSIONED AND LEGIBLE. INCLUDE A GRAPHIC SCALE.**	Required
1	Application Fee and Peer review fees shall be paid after Pre-Application meeting and before the First submittal. It is the applicant's responsibility to make this payment, if an invoice is not generated by the CAP system, the applicant should contact staff prior to first submittal to be invoiced and make payment.	X
2	Copy of signed and dated check list issued at Pre-Application meeting.	X
3	Completed Board Application, Affidavits & Disclosures of Interest (original signatures).	X
4	Signed and dated Letter of Intent. **Letter must outline application details and identify hardships if Variances are requested.** (see also Items # 42,43 and 44).	X
5	Mailing Labels: Upload property owner's list and copy of original certified letter from provider. See #52 for submittal of Hard copy / originals of these items.	X
6	Copies of all current or previously active Business Tax Receipts.	
7	School Concurrency Application for projects with a net increase in residential units (no SFH). Provide Planning Department - Miami Dade - School Concurrency Application for Transmittal	
8	Survey: Electronic version of original signed & sealed, dated no more than six months from date of application. Survey must provide: lot area, grade per Section 114-1 of the City Code. (If no sidewalk exists, provide the elevation of the crown of the road) and spot elevations.	X
9	**Architectural Plans and Exhibits (must be 11"x 17")**	X
a	Cover Sheet with bullet point scope of work, clearly labeled "First Submittal" and dated with First Submittal deadline date. **Include copies of previous recorded board orders, if applicable.**	X
b	Copy of the original survey included in plan package. See No. 8 above for survey requirements	X
c	All Applicable Zoning Information (Use Planning Department zoning data sheet format).	X
d	Context Location Plan, Min 8.5"X11" Color Aerial 1/2 mile radius, identifying project and showing name of streets. (no Google images)	X
e	Full legal description of the property if not included in survey (for lengthy legal descriptions, attach as a separate document - label clearly).	X
f	Existing FAR Shaded Diagrams (Single Family Districts: Unit Size and Lot Coverage Shaded Diagrams), if applicable	X
g	Proposed FAR Shaded Diagrams(Single Family Districts: Unit Size and Lot Coverage Shaded Diagrams), if applicable.	X
h	Site Plan (fully dimensioned with setbacks, existing and proposed, including adjacent right-of-way widths).	X

*** 60 day lead time for projects including traffic studies is necessary to ensure completion of review and required corrections by Final submittal deadline. Applications cannot be scheduled without evaluated and corrected traffic studies.**

Indicate N/A If Not Applicable

Initials: KS

MIAMIBEACH

Planning Department, 1700 Convention Center Drive 2nd Floor
Miami Beach, Florida 33139, www.miamibeachfl.gov
305.673.7550

Property address: _____

i	Current color photographs, dated, Min 4"x 6" of project site and existing structures (no Google images)	X
j	Current, color photographs, dated, Min 4"x6" of interior space (no Google images)	X
k	Current color photographs, dated, Min 4"x 6" of context, corner to corner, across the street and surrounding properties with a key directional plan (no Google images)	X
l	Existing Conditions Drawings (Floor Plans & Elevations with dimensions). Number of seats, furniture layout if applicable	X
m	Demolition Plans (Floor Plans & Elevations with dimensions)	X
n	Proposed Floor Plans and Roof Plan, including mechanical equipment plan and section marks. Plans shall indicate location of all property lines and setbacks.	X
o	Proposed Elevations, materials & finishes noted (showing grade, base flood elevation, heights in NGVD values and free board if applicable)	X
p	Proposed Section Drawings	X
q	Color Renderings (elevations and three dimensional perspective drawings).	
10	**Landscape Plans and Exhibits (must be 11"x 17")**	
a	Landscape Plan - street and onsite - identifying existing, proposed landscape material, lighting, irrigation, raised curbs, tree survey and tree disposition plan, as well as underground and overhead utilities when street trees are required.	
b	Hardscape Plan, i.e. paving materials, pattern, etc.	

11	Copy of original Building Permit Card, & Microfilm, if available.	
12	Copy of previously approved building permits. (provide building permit number).	
13	Existing and Proposed detailed topographic survey depicting existing spot grades (NAVD) as well as all underground/overhead utilities and easements/agreements with recording data. See Part 1 / Section 1 / A. Surveying & Mapping Standards and submittal Requirements of the Public Works Manual. http://www.miamibeachfl.gov/publicworks/engineering/engineeringmanual.aspx?id=12920	
14	Vacant/Unoccupied structures or sites shall provide recent photographic evidence that the site and structure are secured and maintained. The applicant shall obtain and post a No Trespassing Sign from the City's Police Dept.	
15	Historic Resources Report (This report shall include, but not be limited to, copy of the original Building Permit Card and subsequent modifications, Microfilm records, existing condition analysis, photographic and written description of the history and evolution of the original building on the site, all available historic data including original plans, historic photographs and permit history of the structure and any other related information on the property.	
16	Contextual Elevation Line Drawings, corner to corner, across the street and surrounding properties (dated).	
17	Line of Sight studies.	
18	Structural Analysis of existing building including methodology for shoring and bracing.	
19	Proposed exterior and interior lighting plan, including photometric calculations.	
20	Exploded Axonometric Diagram (showing second floor in relationship to first floor).	
21	Neighborhood Context Study. (Planning will provide guidance if necessary for application.)	
22	Required yards open space calculations and shaded diagrams.	
23	Required yards section drawings.	
24	Variance and/or Waiver Diagram	
25	Schematic signage program	
26	Detailed sign(s) with dimensions and elevation drawings showing exact location.	
27	Elevation drawings showing area of building façade for sign calculation (Building ID signs).	
28	Daytime and nighttime renderings for illuminated signs.	

Indicate N/A If Not Applicable

Initials: RS

MIAMIBEACH
Planning Department, 1700 Convention Center Drive 2nd Floor
Miami Beach, Florida 33139, www.miamibeachfl.gov
305.673.7550

Property address: _____

29	Floor Plan Indicating area where alcoholic beverages will be displayed.	
30	Survey showing width of the canal (Dimension shall be certified by a surveyor)	
31	Site Plan showing total projection of structures from seawall, location and dimension of all structures inclusive of dock, mooring piles, boat lift, etc.	
32	DERM recommendation/preliminary approval. Docks or any structures shall have approval stamp from DERM or other regulatory agency before submitting for a variance. A letter from DERM or other agency, explaining specific requirements for the project is recommended.	
33	Technical specifications of the boat lift and/ or boat, ship of vessel to be docked or moored.	
34	Survey shall include spot elevations in rear yard and elevation points on the dune adjacent to the property. Provide highest elevation point on the due within the property. Erosion control line and Bulkhead line shall be indicated if present.	
35	Scaled, signed, sealed and dated specific purpose survey (Alcohol License/Distance Separation) distance shown on survey with a straight line.	
36	Proposed Operational Plan: Include deliveries and trash pickup times, hours of operations, number of employees, security and restaurant menu (if applicable).	
37	Maneuvering plan for loading within the existing/proposed conditions, delivery and garbage trucks size (length and width).	
38	Traffic Study, Site plan(s) : Revised version addressing first round of comments from Transportation Department and peer review. (See Transportation Department check list for requirements.)	
39	Sound Study report (Hard copy) with 1 CD.	
40	**Site Plan (Identify streets and alleys)**	
a	Identify: setbacks _____Height_____Drive aisle widths_____Streets and sidewalks widths_____	
b	# parking spaces & dimensions_____ Loading spaces locations & dimensions_____	
c	# of bicycle parking spaces_____	
d	Interior and loading area location & dimensions_____	
e	Street level trash room location and dimensions_____	
f	Delivery route_____Sanitation operation_____ Valet drop-off & pick-up_____Valet route in and out_____	
g	Valet route to and from _____auto-turn analysis for delivery and sanitation vehicles_____	
h	Indicate any backflow preventer and FPL vault if applicable	
i	Indicate location of the area included in the application if applicable	
j	Preliminary on-street loading plan	
41	**Floor Plan (dimensioned)**	
a	Total floor area	
b	Identify # seats indoors_____ outdoors_____ seating in public right of way _____ Total_____	
c	Occupancy load indoors and outdoors per venue_____ Total when applicable_____	
42	**The letter of Intent shall include and respond to all sea level rise and resiliency review criteria per section 133-50 of the City Code.**	X
43	**The Letter of Intent for Variances shall include and respond to all review guidelines in the code as follows:**	
a	Section 118-53 (d) of the City Code for each Variance.	
44	**The Letter of Intent for Planning Board shall include and respond to all review guidelines in the code as follows:**	
a	For Conditional Use -Section 118-192 (a)(1)-(7)	
b	CU -Entertainment Establishments - Section 142-1362 (a)(1)-(9)	
c	CU - Mechanical Parking - Section 130-38 (3)(c)(i)(1)-(2) & (4)(a)-(k)	
d	CU - Structures over 50,000 SQ.FT. - Section 118-192 (b) (1)-(11)	
e	CU - Religious Institutions - Section 118-192 (c) (1)-(11)	

Indicate N/A If Not Applicable

Initials: _____

MIAMIBEACH
Planning Department, 1700 Convention Center Drive 2nd Floor
Miami Beach, Florida 33139, www.miamibeachfl.gov
305.673.7550

Property Address: _____

f	For Lot Splits - Section 118-321 (B) (1)-(6). Also see application instructions	
	Notes: The applicant is responsible for checking above referenced sections of the Code. If not applicable write N/A	

****ADDITIONAL INFORMATION AS MAY BE REQUIRED AT THE PRE-APPLICATION MEETING**

ITEM #	**FINAL SUBMITTAL (via CAP)** **Revised and/or supplemented documents and drawings to address staff comments. Plans should be clearly labeled "Final Submittal" and dated with Final Submittal deadline date.** **Upload documents online (via CAP) before 5:00 pm on final submittal deadline. Staff will review and issue a notice to proceed to Paper Final submittal or to continue submittal to a future meeting if the application is found incomplete.**	
45	Traffic Study, Site plan(s): This is the final traffic study including any modifications required to address comments from the City's Transportation Department. City's required permit by FDOT should be obtained prior to Final submittal (via CAP).	

ITEM #	**PAPER FINAL SUBMITTAL:**	**Required**
46	Original application with all signed and notarized applicable affidavits and disclosures.	X
47	Original of all applicable items.	X
48	One (1) signed and sealed 11"X17" bound, collated set of all the required documents.	X
49	14 collated copies of all required documents	X
50	One (1) CD/DVD with electronic copy of entire final application package (plans, application, Letter of Intent, traffic/sound study, etc.) see CD/DVD formatting attached, for instructions.	X
51	Traffic Study (Hard copy)	
52	Mailing Labels -2 sets of gummed labels and a CD including: Property owner's list and Original certified letter from provider.	X

ADDITIONAL INFORMATION AND ACKNOWLEDGEMENTS

A. **Other information/documentation required for First submittal will be identified during Pre-Application meeting but may be modified based on further analysis.**

B. **It is the responsibility of the applicant to confirm that documents submitted via CAP, Paper Submittal sets (14 copies), and electronic version on CD are consistent with each other and legible.**

C. **Plan revisions and supplemental documentation will not be accepted after the Final Submittal deadline**

D. **All documents required for Board applications must be submitted in an electronic format (PDF) via CD in the manner prescribed herein. The CD is considered the "Formal Submission", and must include the electronic version of all hard copy documents associated with the application. A new Updated CD will be required if any modifications are made before or after hearing. Failure to comply with the aforementioned may result in a rehearing before the applicable board at the applicant's expense.**

E. **Please note that the applicant will be required to submit revised plans pursuant to applicable Board Conditions no later than 60 days after Board Approval. (If applicable)**

Applicant's or designee's signature

Date 10-23-17

Indicate N/A If Not Applicable

Initials: _____

ITEM # 3—BOARD APPLICATION

MIAMI BEACH

PLANNING DEPARTMENT, 1700 CONVENTION CENTER DRIVE, 2ND FLOOR
MIAMI BEACH, FLORIDA 33139, WWW.MIAMIBEACHFL.GOV
305-673-7550

LAND USE BOARD HEARING APPLICATION

THE FOLLOWING APPLICATION IS SUBMITTED FOR REVIEW AND CONSIDERATION OF THE PROJECT DESCRIBED HEREIN BY THE LAND USE BOARD SELECTED BELOW. A SEPARATE APPLICATION MUST BE COMPLETED FOR EACH BOARD REVIEWING THE PROPOSED PROJECT.

- ☐ BOARD OF ADJUSTMENT
  - ☐ VARIANCE FROM A PROVISION OF THE LAND DEVELOPMENT REGULATIONS
  - ☐ APPEAL OF AN ADMINISTRATIVE DECISION
- ☒ DESIGN REVIEW BOARD
  - ☒ DESIGN REVIEW APPROVAL
  - ☐ VARIANCE RELATED TO PROJECT BEING CONSIDERED OR APPROVED BY DRB.
- ☐ HISTORIC PRESERVATION BOARD
  - ☐ CERTIFICATE OF APPROPRIATENESS FOR DESIGN
  - ☐ CERTIFICATE OF APPROPRIATENESS TO DEMOLISH A STRUCTURE
  - ☐ HISTORIC DISTRICT / SITE DESIGNATION
  - ☐ VARIANCE RELATED TO PROJECT BEING CONSIDERED OR APPROVED BY HPB.
- ☐ PLANNING BOARD
  - ☐ CONDITIONAL USE PERMIT
  - ☐ LOT SPLIT APPROVAL
  - ☐ AMENDMENT TO THE LAND DEVELOPMENT REGULATIONS OR ZONING MAP
  - ☐ AMENDMENT TO THE COMPREHENSIVE PLAN OR FUTURE LAND USE MAP
- ☐ FLOOD PLAIN MANAGEMENT BOARD
  - ☐ FLOOD PLAIN WAIVER
- ☐ OTHER _____

SUBJECT PROPERTY ADDRESS: Proposed wireless small cell infrastructure on the public right of way.
Latitude: 25.855649 Longitude: -80.129118, X:942564.49091, Y: 554173.45511
Nearest Intersection: Rue Vendome / Normandy Drive
Approximate address: 948 Normandy Drive, Miami Beach, Fl 33141

LEGAL DESCRIPTION: PLEASE ATTACH LEGAL DESCRIPTION AS "EXHIBIT A"

FOLIO NUMBER (S) Public Right of Way

1. APPLICANT: ☐ OWNER OF THE SUBJECT PROPERTY ☐ TENANT ☐ ARCHITECT ☐ LANDSCAPE ARCHITECT
☐ ENGINEER ☐ CONTRACTOR ☒ OTHER (infactructure owner)

NAME MOBILITIE, LLC
ADDRESS 3475 Piedmont Rd NE, Suite 1000, Atlanta, GA, 30305
BUSINESS PHONE (786) 910-4309 CELL PHONE (786) 910-4309
E-MAIL ADDRESS Oraez@mobilitie.com

OWNER IF DIFFERENT THAN APPLICANT:

NAME Same as applicant
ADDRESS
BUSINESS PHONE CELL PHONE
E-MAIL ADDRESS

2. AUTHORIZED REPRESENTATIVE(S): N/A

☐ ATTORNEY:
NAME
ADDRESS
BUSINESS PHONE CELL PHONE
E-MAIL ADDRESS

☒ AGENT:
NAME Orlando Raez
ADDRESS 3450 Lakeside Drive, Suite 301, Miramar, FL 33027
BUSINESS PHONE (786) 910-4309 CELL PHONE (786) 910-4309
E-MAIL ADDRESS oraez@mobilite.com

☐ CONTACT:
NAME
ADDRESS
BUSINESS PHONE CELL PHONE
E-MAIL ADDRESS

3. PARTY RESPONSIBLE FOR PROJECT DESIGN:
☐ ARCHITECT ☐ LANDSCAPE ARCHITECT ☒ ENGINEER ☐ CONTRACTOR ☐ OTHER:
NAME Stephen Bray
ADDRESS 1800 Route 34 Wall NJ 07719
BUSINESS PHONE (732) 280-5623 CELL PHONE
E-MAIL ADDRESS sbray@kmbcompanies.com

FILE NO.

4. SUMMARY OF APPLICATION – PROVIDE BRIEF SCOPE OF PROJECT:
MOBILITIE, LLC seeks to install one wireless small-cell stealth pole in the public rights of way in the City of Miami Beach in order to improve the capacity and coverage of cellular devices within the City.

4A. IS THERE AN EXISTING BUILDING(S) ON THE SITE ☐ YES ☒ NO

4B. DOES THE PROJECT INCLUDE INTERIOR OR EXTERIOR DEMOLITION ☐ YES ☒ NO

4C. PROVIDE THE TOTAL FLOOR AREA OF THE NEW BUILDING (IF APPLICABLE) n/a SQ. FT.

4D. PROVIDE THE TOTAL GROSS FLOOR AREA OF THE NEW BUILDING (INCLUDING REQUIRED PARKING AND ALL USEABLE FLOOR SPACE). _____ SQ. FT.

5. APPLICATION FEE (TO BE COMPLETED BY PLANNING STAFF) $_____

- A SEPARATE DISCLOSURE OF INTEREST FORM MUST BE SUBMITTED WITH THIS APPLICATION IF THE APPLICANT OR OWNER IS A CORPORATION, PARTNERSHIP, LIMITED PARTNERSHIP OR TRUSTEE.
- ALL APPLICABLE AFFIDAVITS MUST BE COMPLETED AND THE PROPERTY OWNER MUST COMPLETE AND SIGN THE "POWER OF ATTORNEY" PORTION OF THE AFFIDAVIT IF THEY WILL NOT BE PRESENT AT THE HEARING, OR IF OTHER PERSONS ARE SPEAKING ON THEIR BEHALF.
- TO REQUEST THIS MATERIAL IN ALTERNATE FORMAT, SIGN LANGUAGE INTERPRETER (FIVE-DAY NOTICE IS REQUIRED), INFORMATION ON ACCESS FOR PERSONS WITH DISABILITIES, AND ACCOMMODATION TO REVIEW ANY DOCUMENT OR PARTICIPATE IN ANY CITY-SPONSORED PROCEEDINGS, CALL 305.604.2489 AND SELECT (1) FOR ENGLISH OR (2) FOR SPANISH, THEN OPTION 6; TTY USERS MAY CALL VIA 711 (FLORIDA RELAY SERVICE).

PLEASE READ THE FOLLOWING AND ACKNOWLEDGE BELOW:

- APPLICATIONS FOR ANY BOARD HEARING(S) WILL NOT BE ACCEPTED WITHOUT PAYMENT OF THE REQUIRED FEE. ALL CHECKS ARE TO BE MADE PAYABLE TO THE "CITY OF MIAMI BEACH".
- PUBLIC RECORDS NOTICE – ALL DOCUMENTATION, SUBMITTED FOR THIS APPLICATION IS CONSIDERED A PUBLIC RECORD SUBJECT TO CHAPTER 119 OF THE FLORIDA STATUTES AND SHALL BE DISCLOSED UPON REQUEST.
- IN ACCORDANCE WITH THE REQUIREMENTS OF SECTION 2-482 OF THE CODE OF THE CITY OF MIAMI BEACH, ANY INDIVIDUAL OR GROUP THAT WILL BE COMPENSATED TO SPEAK OR REFRAIN FROM SPEAKING IN FAVOR OR AGAINST A PROJECT BEING PRESENTED BEFORE ANY OF THE CITY'S LAND USE BOARDS, SHALL FULLY DISCLOSE, PRIOR TO THE PUBLIC HEARING, THAT THEY HAVE BEEN, OR WILL BE COMPENSATED. SUCH PARTIES INCLUDE: ARCHITECTS, LANDSCAPE ARCHITECTS, ENGINEERS, CONTRACTORS, OR OTHER PERSONS RESPONSIBLE FOR PROJECT DESIGN, AS WELL AS AUTHORIZED REPRESENTATIVES ATTORNEYS OR AGENTS AND CONTACT PERSONS WHO ARE REPRESENTING OR APPEARING ON BEHALF OF A THIRD PARTY; SUCH INDIVIDUALS MUST REGISTER WITH THE CITY CLERK PRIOR TO THE HEARING.

FILE NO._____

- IN ACCORDANCE WITH SEC.118-31. – DISCLOSURE REQUIREMENT. EACH PERSON OR ENTITY REQUESTING APPROVAL, RELIEF OR OTHER ACTION FROM THE PLANNING BOARD, DESIGN REVIEW BOARD, HISTORIC PRESERVATION BOARD (INCLUDING THE JOINT DESIGN REVIEW BOARD/HISTORIC PRESERVATION BOARD), OR THE BOARD OF ADJUSTMENT SHALL DISCLOSE, AT THE COMMENCEMENT (OR CONTINUANCE) OF THE PUBLIC HEARING(S), ANY CONSIDERATION PROVIDED OR COMMITTED, DIRECTLY OR ON ITS BEHALF, FOR AN AGREEMENT TO SUPPORT OR WITHHOLD OBJECTION TO THE REQUESTED APPROVAL, RELIEF OR ACTION, EXCLUDING FROM THIS REQUIREMENT CONSIDERATION FOR LEGAL OR DESIGN PROFESSIONAL SERVICES RENDERED OR TO BE RENDERED. THE DISCLOSURE SHALL; (I) BE IN WRITING, (II) INDICATE TO WHOM THE CONSIDERATION HAS BEEN PROVIDED OR COMMITTED, (III) GENERALLY DESCRIBE THE NATURE OF THE CONSIDERATION, AND (IV) BE READ INTO THE RECORD BY THE REQUESTING PERSON OR ENTITY PRIOR TO SUBMISSION TO THE SECRETARY/CLERK OF THE RESPECTIVE BOARD. UPON DETERMINATION BY THE APPLICABLE BOARD THAT THE FOREGOING DISCLOSURE REQUIREMENT WAS NOT TIMELY SATISFIED BY THE PERSON OR ENTITY REQUESTING APPROVAL, RELIEF OR OTHER ACTION AS PROVIDED ABOVE, THEN (I) THE APPLICATION OR ORDER, AS APPLICABLE, SHALL IMMEDIATELY BE DEEMED NULL AND VOID WITHOUT FURTHER FORCE OR EFFECT, AND (II) NO APPLICATION FROM SAID PERSON OR ENTITY FOR THE SUBJECT PROPERTY SHALL BE REVIEWED OR CONSIDERED BY THE APPLICABLE BOARD(S) UNTIL EXPIRATION OF A PERIOD OF ONE YEAR AFTER THE NULLIFICATION OF THE APPLICATION OR ORDER. IT SHALL BE UNLAWFUL TO EMPLOY ANY DEVICE, SCHEME OR ARTIFICE TO CIRCUMVENT THE DISCLOSURE REQUIREMENTS OF THIS SECTION AND SUCH CIRCUMVENTION SHALL BE DEEMED A VIOLATION OF THE DISCLOSURE REQUIREMENTS OF THIS SECTION.
- WHEN THE APPLICABLE BOARD REACHES A DECISION A FINAL ORDER WILL BE ISSUED STATING THE BOARD'S DECISION AND ANY CONDITIONS IMPOSED THEREIN. THE FINAL ORDER WILL BE RECORDED WITH THE MIAMI-DADE CLERK OF COURTS. THE ORIGINAL BOARD ORDER SHALL REMAIN ON FILE WITH THE CITY OF MIAMI BEACH PLANNING DEPARTMENT. UNDER NO CIRCUMSTANCES WILL A BUILDING PERMIT BE ISSUED BY THE CITY OF MIAMI BEACH WITHOUT A COPY OF THE RECORDED FINAL ORDER BEING INCLUDED AND MADE A PART OF THE PLANS SUBMITTED FOR A BUILDING PERMIT.

THE AFOREMENTIONED IS ACKNOWLEDGED BY: ☐ OWNER OF THE SUBJECT PROPERTY
☒ AUTHORIZED REPRESENTATIVE

SIGNATURE: _____

PRINT NAME: Orlando Raez

FILE NO. _____

NOT APPLICABLE

OWNER AFFIDAVIT FOR INDIVIDUAL OWNER

STATE OF

COUNTY OF

I,_____, being first duly sworn, depose and certify as follows: (1) I am the owner of the property that is the subject of this application. (2) This application and all information submitted in support of this application, including sketches, data, and other supplementary materials, are true and correct to the best of my knowledge and belief. (3) I acknowledge and agree that, before this application may be publicly noticed and heard by a land development board, the application must be complete and all information submitted in support thereof must be accurate. (4) I also hereby authorize the City of Miami Beach to enter my property for the sole purpose of posting a Notice of Public Hearing on my property, as required by law. (5) I am responsible for removing this notice after the date of the hearing.

_____
SIGNATURE

Sworn to and subscribed before me this_____day of_____, 20___. The foregoing instrument was acknowledged before me by_____, who has produced_____as identification and/or is personally known to me and who did/did not take an oath.

NOTARY SEAL OR STAMP

_____
NOTARY PUBLIC

My Commission Expires:

_____
PRINT NAME

ALTERNATE OWNER AFFIDAVIT FOR CORPORATION, PARTNERSHIP, OR LIMITED LIABILITY COMPANY

(Circle one)

STATE OF Georgia

COUNTY OF Fulton

I, Gadiel Rosario-Rivera being duly sworn, depose and certify as follows: (1) I am the NRE Manager (print title)of MOBILITIE, LLC (print name of corporate entity). (2) I am authorized to file this application on behalf of such entity. (3) This application and all information submitted in support of this application, including sketches, data, and other supplementary materials, are true and correct to the best of my knowledge and belief. (4) The corporate entity named herein is the owner or tenant of the property that is the subject of this application. (5) I acknowledge and agree that, before this application may be publicly noticed and heard by a land development board, the application must be complete and all information submitted in support thereof must be accurate. (6) I also hereby authorize the City of Miami Beach to enter the subject property for the sole purpose of posting a Notice of Public Hearing on the property, as required by law. (7) I am responsible for removing this notice after the date of the hearing.

_____
SIGNATURE

Sworn to and subscribed before me this 18th day of January ,2018 .The foregoing instrument was acknowledged before me by Gadiel Rosario-Rivera, NRE Manager of MOBILITIE, LLC , on behalf of such entity, who has produced as identification and/or is personally known to me and who did/did not take an oath.

NOTARY SEAL OR STAMP:

ERIN E. SCOTT NOTARY EXPIRES GEORGIA MAY 12, 2018 PUBLIC DEKALB COUNTY

_____
NOTARY PUBLIC

My Commission Expires:

Erin E. Scott

~~Gadiel Rosario-Rivera, NRE Manager~~

_____
PRINT NAME

FILE NO._____

POWER OF ATTORNEY AFFIDAVIT

STATE OF Georgia

COUNTY OF Fulton

I, Gadiel Rosario-Rivera, being duly sworn and deposed, certify as follows: (1) I am the owner or representative of the owner of the real property that is the subject of this application.(2) I hereby authorize Orlando Raez to be my representative before the _____ Board. (3) I also hereby authorize the City of Miami Beach to enter the subject property for the sole purpose of posting a Notice of Public Hearing on the property, as required by law. (4) I am responsible for removing this notice after the date of the hearing.

Gadiel Rosario-Rivera, NRE Manager
PRINT NAME (and Title, if applicable)

SIGNATURE

Sworn to and subscribed before me this 18th day of January, 2018. The foregoing instrument was acknowledged before me by Gadiel Rosario-Rivera, NRE Manager, _____ of MOBILITIE, LLC who has produced as identification and/or is personally known to me and who did/did not take an oath.

NOTARY SEAL OR STAMP

ERIN E. SCOTT NOTARY EXPIRES GEORGIA MAY 12, 2018 PUBLIC DEKALB COUNTY

NOTARY PUBLIC

My Commission Expires

Erin E. Scott
PRINT NAME

NOT APPLICABLE

CONTRACT FOR PURCHASE

If the applicant is not the owner of the property, but the applicant is a party to a contract to purchase the property, whether or not such contract is contingent on this application, the applicant shall list the names of the contract purchasers below, including any and all principal officers, stockholders, beneficiaries, or partners. If any of the contract purchasers are corporations, partnerships, limited liability companies, trusts, or other corporate entities, the applicant shall further disclose the identity of the individual(s) (natural persons) having the ultimate ownership interest in the entity. If any contingency clause or contract terms involve additional individuals, corporations, partnerships, limited liability companies, trusts, or other corporate entities, list all individuals and/or corporate entities.*

NAME

DATE OF CONTRACT

NAME, ADDRESS, AND OFFICE

% OF STOCK

In the event of any changes of ownership or changes in contracts for purchase, subsequent to the date that this application is filed, but prior to the date of a final public hearing, the applicant shall file a supplemental disclosure of interest.

FILE NO._____

NOT APPLICABLE

CITY OF MIAMI BEACH
DEVELOPMENT REVIEW BOARD APPLICATION

DISCLOSURE OF INTEREST

1. CORPORATION, PARTNERSHIP, OR LIMITED LIABILITY COMPANY

If the property that is the subject of the application is owned or leased by a corporation, partnership, or limited liability company, list ALL of the owners, shareholders, partners, managers, and/or members, and the percentage of ownership held by each. If the owners consist of one or more corporations, partnerships, trusts, partnerships, or other corporate entities, the applicant shall further disclose the identity of the individual(s) (natural persons) having the ultimate ownership interest in the entity.*

_____

NAME OF CORPORATE ENTITY

NAME AND ADDRESS	% OF OWNERSHIP

_____

NAME OF CORPORATE ENTITY

NAME AND ADDRESS	% OF OWNERSHIP

IF THERE ARE ADDITIONAL CORPORATE OWNERS, LIST ALL SUCH OWNERS, INCLUNG CORPORATE NAMES AND THE NAME, ADDRESS, AND PERCENTAGE OF OWNERSHIP OF EACH ADDITIONAL OWNER, ON A SEPARATE PAGE.

NOTE: Notarized signature required on page 9

FILE NO._____

NOT APPLICABLE

CITY OF MIAMI BEACH
DEVELOPMENT REVIEW BOARD APPLICATION
DISCLOSURE OF INTEREST

2. TRUSTEE

If the property that is the subject of this application is owned or leased by a trust, list any and all trustees and beneficiaries of the trust, and the percentage of interest held by each. If the owners consist of one or more corporations, partnerships, trusts, partnerships, or other corporate entities, the applicant shall further disclose the identity of the individual(s) (natural persons) having the ultimate ownership interest in the entity.*

_____

TRUST NAME

NAME AND ADDRESS	% INTEREST

NOTE: Notarized signature required on page 9

FILE NO._____

3. COMPENSATED LOBBYIST:

Pursuant to Section 2-482 of the Miami Beach City Code, all lobbyists shall, before engaging in any lobbying activities, register with the City Clerk. Please list below any and all persons or entities retained by the applicant to lobby City staff or any of the City's land development boards in support of this application.

	NAME	ADDRESS	PHONE #
a.	NONE		
b.			
c.			

Additional names can be placed on a separate page attached to this form.

*Disclosure shall not be required of any entity, the equity interests in which are regularly traded on an established securities market in the United States or other country, or of any entity, the ownership interests of which are held in a limited partnership or other entity, consisting of more than 5,000 separate interests, where no one person or entity holds more than a total of 5% of the ownership interests in the entity.

APPLICANT HEREBY ACKNOWLEDGES AND AGREES THAT (1) ANY APPROVAL GRANTED BY A LAND DEVELOPMENT BOARD OF THE CITY SHALL BE SUBJECT TO ANY AND ALL CONDITIONS IMPOSED BY SUCH BOARD AND BY ANY OTHER BOARD HAVING JURISDICTION, AND (2) APPLICANT'S PROJECT SHALL COMPLY WITH THE CODE OF THE CITY OF MIAMI BEACH AND ALL OTHER APPLICABLE CITY, STATE, AND FEDERAL LAWS.

APPLICANT AFFIDAVIT

STATE OF Georgia

COUNTY OF Fulton

I, Gadiel Rosario-Rivera, being first duly sworn, depose and certify as follows: (1) I am the applicant, or the representative of the applicant. (2) This application and all information submitted in support of this application, including disclosures, sketches, data, and other supplementary materials, are true and correct to the best of my knowledge and belief.

SIGNATURE

Sworn to and subscribed before me this 18th day of January, 2018. The foregoing instrument was acknowledged before me by, who has produced as identification and/or is personally known to me and who did/did not take an oath.

NOTARY SEAL OR STAMP

ERIN E. SCOTT NOTARY EXPIRES GEORGIA MAY 12, 2018 PUBLIC DEKALB COUNTY

NOTARY PUBLIC

My Commission Expires:

Erin E. Scott

PRINT NAME

FILE NO.

ITEM # 4—LETTER OF INTENT

3450 Lakeside Drive, Suite 301| Miramar, FL 33027

February 9th, 2018

City of Miami Beach
1700 Convention Center Drive
Miami Beach, FL 33139

RE: Board Applications for Small-Cell Stealth Poles on the public right-of-way

Dear Board Members and City Staff:

This letter intends to serve as Mobilitie, LLC's "Letter of Intent" in regards to our proposed small-cells infrastructure on the public rights-of-way within the City of Miami Beach, FL. Mobilitie is a wireless infrastructure company that develops intelligent infrastructure solutions to densify and optimize wireless carriers services and geographic reach. Mobilitie LLC possesses a Certificate to provide Alternative Access Vendor services from the Florida Public Service Commission. Mobilitie LLC is also registered with the City of Miami Beach, pursuant to City Code Section 104-4, as a communications services provider.

Mobilitie LLC works with all wireless carriers to enhance services throughout the country. Our design optimizes the performance of wireless networks by taking into consideration customer usage behaviors, terrain, obstructions, points-of-interest, and local guidance and ordinances. Mobilitie LLC's small-cell network within the City of Miami Beach will be utilized by Sprint, a wireless carrier, to fill in network deficiencies as a result of high demand for high-speed wireless service in the City.

During pre-application meetings with the City of Miami Beach Planning Department staff, it was expressed that the City of Miami Beach had spent two years developing an acceptable stealth design with a competitor. Although there are additional costs associated with the stealth design for our company, Mobilitie, LLC decided to work cooperatively with the City of Miami Beach and integrated the stealth design for our small-cell equipment installations. Our competitor has already pulled and replaced dozens of street light poles with stealth telecommunication light poles after getting permits from the City. Mobilitie LLC is effectively proposing to do the same. As required during our meetings with Planning Department staff, we have also reserved an area inside each pole should another wireless carrier which to utilize our poles for their equipment (reserved area is marked on plans).

REQUEST FOR APPROVAL

Mobilitie respectfully requests that the City review and approve the attached applications supplemented with the enclosed information. Mobilitie values the City's input on our proposal, and will work closely with the City to address any other concerns with our proposal, such as location, height, and pole color. Mobilitie looks forward to working with the City of Miami Beach and values its partnership in order to provide your constituents and visitors with high-speed connectivity. Thank you for your attention to this matter.

Respectfully submitted,

Orlando Raez | Permitting Manager
oraez@mobilitie.com
786 910 4309 mobile
www.mobilitie.com

3450 Lakeside Drive, Suite 301| Miramar, FL 33027

March 1, 2018

Photo-Simulation

Subject: 948 Normandy Drive, Miami Beach, Fl 33141
Legal Description: Public right of way

ITEM # 5—MAILING LABELS

3450 Lakeside Drive, Suite 301| Miramar, FL 33027

January 25th, 2018

City of Miami Beach
1700 Convention Center Drive
Miami Beach, FL 33139

RE: Property Owners list within 375 feet of:

Subject: 948 Normandy Drive, Miami Beach, Fl 33141
Legal Description: Public Right of Way

This is to certify that the attached ownership list, map and mailing labels are a complete and accurate representation of the real estate property and property owners within 375 feet radius of the external boundaries of the subject property listed above. This reflects the most current records on the file in Miami-Dade County Property Appraisers' Office.

Total number of property owners without repetition: 68, including 1 international

Respectfully submitted,

Orlando Raez | Permitting Manager
oraez@mobilitie.com
786 910 4309 mobile
www.mobilitie.com

3450 Lakeside Drive, Suite 301| Miramar, FL 33027

January 25th, 2018

City of Miami Beach
1700 Convention Center Drive
Miami Beach, FL 33139

Subject: 948 Normandy Drive, Miami Beach, Fl 33141
Legal Description: Public Right of Way

375-Foot Radius Map

Source: Miami Dade County Property Appraiser, http://gisweb.miamidade.gov/PublicNotification/

Folio	Property Owner	Address	City	State	Zip Code	Country
02-3210-023-0230	HORACIO GAISER TRS	BAHIA BLANCA 787 3 PISO APT A	WILDE BUENOS AIRES ARE 1875		-	ARGENTINA
02-3210-013-1140	UNION PLANTERS BANK	250 RIVERCHASE PKWY 6TH FLOOR	BIRMINGHAM	AL	35244	USA
02-3210-013-1290	WASHINGTON MUTUAL INC	PO BOX 4900	SCOTTSDALE	AZ	85261	USA
02-3210-057-0090	AHMAH INC	807 E FAIRMOUNT RD	BURBANK	CA	91501	USA
02-3210-023-0110	NORMA DE LA CARIDAD GARCIA ARES	2750 NE 183 ST # 1912	AVENTURA	FL	33160	USA
02-3210-013-0350	HOLIDAY BEACH CLUB INC	1124 KANE CONCOURSE	BAY HARBOR ISL	FL	33154-2013	USA
02-3210-013-0280	C J A COMMERCIAL REALTY INC	PO BOX 14-4389	CORAL GABLES	FL	33114	USA
02-3210-013-0660	LA OLA DORADA LLP	501 ALHAMBRA CIR	CORAL GABLES	FL	33134-4903	USA
02-3210-023-0090	MABECA PROPERTIES LLC	1650 CORAL WAY#802	CORAL GABLES	FL	33145	USA
02-3210-012-0340	BELLATURA LLC	3426 WEST 84 ST STE 103-B	HIALEAH	FL	33018	USA
02-3210-013-0490	ALIYAMYN LLC	12381 NW 97 PL	HIALEAH	FL	33018	USA
02-3210-057-0050	E95 FLORIDA PROPERTIES LLC	3540 N 53 AVE	HOLLYWOOD	FL	33021	USA
02-3210-013-0940	THE HELEN P STEVENS FAMILY LTD	1420 OCEAN WAY #12A	JUPITER	FL	33477	USA
02-3210-012-0610	CITY NATIONAL BANK OF FL TR	PO BOX 025611	MIAMI	FL	33102	USA
02-3210-013-0310	OCEAN 18 LOFT INC	4770 BISFAYNE BLVD 1430	MIAMI	FL	33137	USA
02-3210-013-0320	PAPO PROPERTIES LLC	1390 BRICKELL AVE #275	MIAMI	FL	33131	USA
02-3210-013-0510	KNH HOLDINGS LLC	3449 NE 1 AVE L31	MIAMI	FL	33137	USA
02-3210-023-0010	LUZ ELENA ALVAREZ	1145 NORMANDY DR APT 201	MIAMI	FL	33141	USA
02-3210-023-0030	MARTINOS GROUP LLC	1821 NE 146 ST	MIAMI	FL	33181	USA
02-3210-023-0040	VAFS LLC	555 NE 34 ST #1107	MIAMI	FL	33137	USA
02-3210-023-0240	FANDI NASR	13402 SW 126 ST	MIAMI	FL	33186	USA
02-3210-057-0060	ARISTIDES RAMON CASTILLO	1016 71 ST #204	MIAMI	FL	33141-2904	USA
02-3210-013-0360	THE CITY OF MIAMI BEACH	1700 CONVENTION CENTER DR	MIAMI BEACH	FL	33139	USA
02-3210-013-0390	MORUMBI LLC	933 NORMANDY DR	MIAMI BEACH	FL	33141-2927	USA
02-3210-013-0470	JOSEPH A ESTRADA	1760 BAY DR	MIAMI BEACH	FL	33141-4720	USA
02-3210-013-0480	928 71ST STREET HOLDINGS LLC	1665 WASHINGTON AVE # 4 FL	MIAMI BEACH	FL	33139	USA
02-3210-013-0540	CITY OF MIAMI BEACH	1700 CONVENTION CENTER DR	MIAMI BEACH	FL	33139-1819	USA
02-3210-013-0670	NBRV LLC	PO BOX 414318	MIAMI BEACH	FL	33141	USA
02-3210-013-1120	CLARA BELLO TR	1750 JAMES AVE 5E	MIAMI BEACH	FL	33139	USA
02-3210-013-1340	JONATHAN LEWIN GDN	1123 71 ST	MIAMI BEACH	FL	33141	USA
02-3210-023-0050	ESTUDIO BORRIONE LLC	1145 NORMANDY DR 205	MIAMI BEACH	FL	33144	USA
02-3210-023-0060	ROSANNA A CAMINERO	1145 NORMANDY DR #206	MIAMI BEACH	FL	33141-2863	USA
02-3210-023-0070	MICHAEL LUGO	1145 NORMANDY DR UNIT 301	MIAMI BEACH	FL	33141-2884	USA
02-3210-023-0100	JUJUFRA GROUP CORP	221 MERIDIAN AVE 413 A	MIAMI BEACH	FL	33139	USA
02-3210-023-0120	MY OWN PLACE LLC	1145 NORMANDY DR #306	MIAMI BEACH	FL	33141-2884	USA
02-3210-023-0130	RUBEN SERNA	1145 NORMANDY DR #401	MIAMI BEACH	FL	33141-2872	USA
02-3210-023-0140	1145 NORMANDY DR 402 LAND TRUST	1145 NORMANDY DR #402	MIAMI BEACH	FL	33141	USA
02-3210-023-0150	LOURDES G PETERS	1145 NORMANDY DR #403	MIAMI BEACH	FL	33141-2872	USA
02-3210-023-0170	ROLAND ORTIZ	1145 NORMANDY DR #404	MIAMI BEACH	FL	33141-2872	USA
02-3210-023-0180	ASTRID RODRIGUEZ	1145 NORMANDY DR 406	MIAMI BEACH	FL	33141	USA
02-3210-023-0190	K AND Y SUMIDA LLC	1621 BAY RD 501	MIAMI BEACH	FL	33139	USA
02-3210-023-0200	EV PROPERTIES GROUP LLC	2016 BAY DR #602	MIAMI BEACH	FL	33141	USA
02-3210-023-0210	MARIA E AVILA EST OF	1145 NORMANDY DR #503	MIAMI BEACH	FL	33141-2873	USA
02-3210-023-0220	JENNIFER MILIAN JTRS	1145 NORMANDY DR #504	MIAMI BEACH	FL	33141	USA
02-3210-057-0010	ANA GLORIA VASQUEZ	1016 71 ST 106	MIAMI BEACH	FL	33141	USA
02-3210-057-0030	CHARLES DE HART JTRS	2425 FLAMINGO PL UNIT 12	MIAMI BEACH	FL	33140	USA
02-3210-057-0070	STEPHEN ZIMMER	8000 HARDING AVE APT 7A	MIAMI BEACH	FL	33141-1686	USA
02-3210-057-0080	ANASTACIA REYES &H JUAN	1016 71 ST #206	MIAMI BEACH	FL	33141-2905	USA

02-3210-013-0460	JERIKA PROPERTIES INC	5901 NW 151 ST #126	MIAMI LAKES	FL	33014-2447	USA
02-3210-013-0980	1040 NORMANDY LC	5901 NW 151 ST #126	MIAMI LAKES	FL	33014	USA
02-3210-057-0040	DOLAN PROPERTIES INC	5901 NW 151 ST #126	MIAMI LAKES	FL	33014	USA
02-3210-057-0100	CONCOURSE COMMERCIAL LC	5901 NW 151 ST 126	MIAMI LAKES	FL	33014	USA
02-3210-012-0620	GUILLERMO GARCIA &W MARICELA	1710 SO TREASURE DR	NO BAY VILLAGE	FL	33141-4335	USA
02-3210-013-0520	NABIL HACH AL LUCH	7701 BEACHVIEW DR	NO BAY VILLAGE	FL	33141-4009	USA
02-3210-023-0160	DANN R WEIR & YOLANDA RONDA JTRS	1145 NORMANDY DR #404	NORMANDY	FL	33141-2872	USA
02-3210-013-0970	1030 71 STREET LLC	7529 BOUNTY AVE	NORTH BAY VILLAGE	FL	33141	USA
02-3210-057-0020	LIN ONE LLC	7801 HISPANOLA AVE 2	NORTH BAY VILLAGE	FL	33141	USA
02-3210-013-0330	E A Y C INVESTMENTS LLC	16300 NE 19 AVE # 211	NORTH MIAMI BEACH	FL	33162	USA
02-3210-013-0340	SHEILA G GRANT & MICHAEL J WEIL	16499 NE 19TH AVE STE 107	NORTH MIAMI BEACH	FL	33162-4105	USA
02-3210-013-0530	MLW HOLDINGS LLC	5100 PGA BLVD 209	PALM BEACH GARDENS	FL	33418	USA
02-3210-012-0650	R K ASSOCS #2 INC	17100 COLLINS AVE SUTE 225	SUNNY ISLES BEACH	FL	33160-3675	USA
02-3210-013-1250	RK 1106 1108 NORMANDY LLC	17100 COLLINS AVE STE 225	SUNNY ISLES BEACH	FL	33160	USA
02-3210-013-1270	RK 946 966 NORMANDY LLC	17100 COLLINS AVE STE 225	SUNNY ISLES BEACH	FL	33160	USA
02-3210-012-0630	RODNEY K FUDGE	4801 THORNWOOD DR	ACWORTH	GA	30102	USA
02-3210-013-1280	VONCITA LLC	ONE US BANK PLAZA	ST LOUIS	MO	63101	USA
02-3210-013-1040	RUE VENDOME PARTNERS LLC	111 JOHN ST 1806	NEW YORK	NY	10038	USA
02-3210-013-0311	EAYC INV E LLC	845 S FIRST ST	RONKONKOMA	NY	11779	USA
02-3210-023-0020	MOISES CASES &W ESTRELLA	1605 CHESTERWOOD COVE	AUSTIN	TX	78746	USA

Item # 9—Architectural Plans and Exhibits

9a: Cover Sheet with bullet point scope of work, clearly labeled "First Submittal" and dated with First Submittal deadline date.

9d: Location Plan, Min 4"x6" Color Aerial 1/2 mile radius, showing name of streets and project site identified.

9h: Site Plan (fully dimensioned with setbacks, existing and proposed, including adjacent right-of-way widths).

9i: Current color photographs, dated, Min 4"x 6" of project site and existing structures (no Google images)

9n: Specifications of pole and equipment

9o: Proposed elevations , materials, and finishes noted

SITE ID-CANDIDATE LETTER/CASCADE ID-CANDIDATE LETTER:
9FLB000962F/MI90XS507F

LATITUDE/LONGITUDE:
25.855676/-80.129116

CROSS STREET:
RUE VENDOME & FL-934/ NORMANDY DR

CITY, STATE, ZIP:
MIAMI BEACH, FL 33141

IF YOU DIG IN ANY STATE DIAL 811 FOR THE LOCAL "ONE CALL CENTER" – IT'S THE LAW

THE UTILITIES SHOWN HEREIN ARE FOR THE CONTRACTORS CONVENIENCE ONLY. THERE MAY BE OTHER UTILITIES NOT SHOWN ON THESE PLANS. THE ENGINEER/SURVEYOR ASSUMES NO RESPONSIBILITY FOR THE LO–CATIONS SHOWN AND IT SHALL BE THE CONTRACTOR'S RESPONSIBILITY TO VERIFY ALL THE UTILITIES WITHIN THE LIMITS OF THE WORK. ALL DAMAGE MADE TO THE (E) UTILITIES BY THE CONTRACTOR SHALL BE THE SOLE RESPONSIBILITY OF THE CONTRACTOR.

NOTE:
GENERAL CONTRACTOR IS REQUIRED TO CROSS CHECK COORDINATES. EXHIBIT PHOTO, AERIAL PHOTO AND SITE PLAN TO ENSURE PROPER POLE LOCATION PRIOR TO BREAKING GROUND. CONCERNS OR QUESTIONS SHOULD BE IMMEDIATELY DIRECTED TO ASSIGNED MOBILITIE CM.

GENERAL NOTES

THE FACILITY IS UNMANNED AND NOT FOR HUMAN HABITATION. A TECHNICIAN WILL VISIT THE SITE AS REQUIRED FOR ROUTINE MAINTENANCE. THE PROJECT WILL NOT RESULT IN ANY SIGNIFICANT DISTURBANCE OF EFFECT ON DRAINAGE; NO SANITARY SEWER SERVICE, POTABLE WATER OR TRASH DISPOSAL IS REQUIRED AND NO COMMERCIAL SIGNAGE IS (N).

SITE INFORMATION

SITE ID:	9FLB000962F
CASCADE ID:	MI90XS507F
LATITUDE:	25.855676
LONGITUDE:	–80.129116
CROSS STREET:	RUE VENDOME & FL–934/ NORMANDY DR
CITY, STATE, ZIP:	MIAMI BEACH, FL 33141
COUNTY:	MIAMI–DADE COUNTY
JURISDICTION:	MIAMI BEACH CITY
PROPERTY OWNER:	PUBLIC RIGHT–OF–WAY
APPLICANT:	MOBILITIE, LLC 3475 PIEDMONT ROAD NE, SUITE 1000 ATLANTA, GEORGIA 30305 PHONE: (312) 638–5400

ENGINEER

KMB DESIGN GROUP, LLC
1800 ROUTE 34, SUITE 209
WALL, NJ 07719
FOR QUESTIONS EMAIL: DESIGNTEAM@KMBDG.COM
TEL: (732) 280–5623 FAX: (732) 280–3980 www.KMBDG.com

DO NOT SCALE DRAWINGS

CONTRACTORS SHALL VERIFY ALL PLANS, (E) DIMENSIONS & FIELD CONDITIONS ON THE JOB SITE & SHALL IMMEDIATELY NOTIFY THE ARCHITECT/ENGINEER IN WRITING OF ANY DISCREPANCIES BEFORE PROCEEDING WITH THE WORK OR BE RESPONSIBLE FOR SAME.

LOCATION MAPS

VICINITY MAP

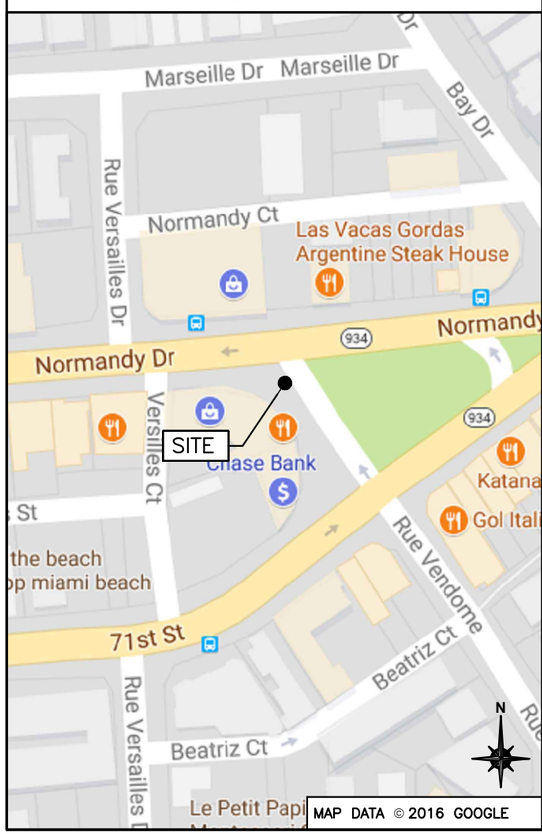

REGIONAL MAP

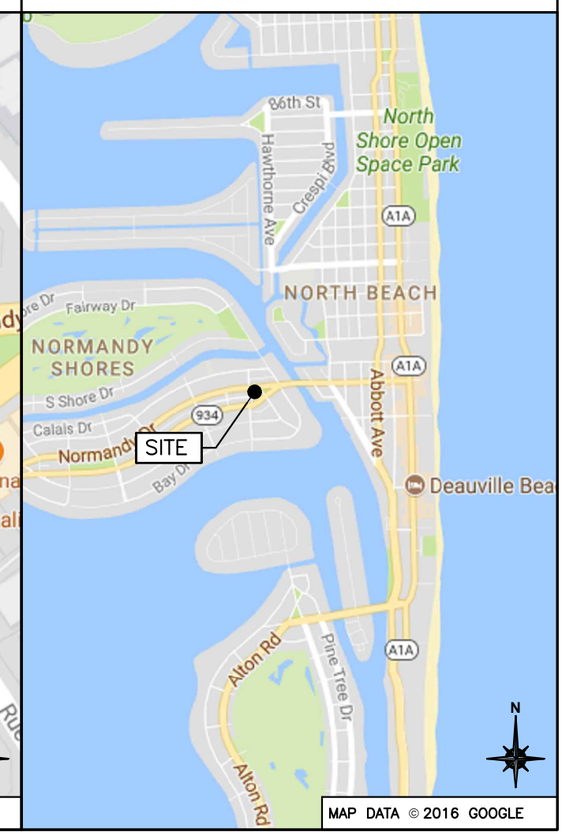

PROJECT DESCRIPTION

NEW STEEL POLE WITHIN AN EXISTING RIGHT–OF–WAY.

THE SCOPE WILL CONSIST OF THE FOLLOWING:
– INSTALL A NEW GALVANIZED STEEL STEALTH POLE WITH PROPOSED BACKHAUL TRANSPORT EQUIPMENT

CODES

2017 FLORIDA BUILDING CODE, 6TH EDITION
NATIONAL ELECTRICAL SAFETY CODE
TIA/EIA–222–G–2 OR LATEST EDITION
LOCAL BUILDING/PLANNING CODE

DRAWING INDEX

SHEET NO:	SHEET TITLE
T–1	TITLE SHEET
SP–1	EXHIBIT PHOTO & SITE PLAN
SP–2	UTILITY SITE PLAN
SP–3	ENLARGED SITE PLAN
EV–1	ELEVATIONS
EV–2	ELEVATIONS
PL–1	PLUMBING & RISER DIAGRAM
EQ–1	EQUIPMENT DETAILS
EQ–2	EQUIPMENT DETAILS
EX–1	EXCAVATION DETAILS
E–1	ELECTRICAL DETAILS
G–1	GROUNDING DETAILS
S–1	FOUNDATION DETAILS
TC–1	VEHICULAR TRAFFIC CONTROL PLAN
TC–2	PEDESTRIAN TRAFFIC CONTROL PLAN
GN–1	GENERAL NOTES
GN–2	GENERAL NOTES
GN–3	GENERAL NOTES
ATTACHED	SITE SURVEY

mobilitie

FINAL SUBMITTAL: 3/2/2018

FIRST SUBMITTAL: 2/12/2018

PROJECT NO:	9FLB000962F
DRAWN BY:	RC
CHECKED BY:	SJB

D	01–09–18	REVISION
C	11–28–17	REVISION
B	10–15–17	REVISION
A	09–03–17	FOR CLIENT REVIEW

KMB DESIGN GROUP, LLC
Stephen A. Bray
PROFESSIONAL ENGINEER
STEPHEN A. BRAY
LICENSE
No.68902
STATE OF
FLORIDA
PROFESSIONAL ENGINEER
FL LICENSE No.68902 1/9/18

IT IS A VIOLATION OF THE LAW FOR ANY PERSON, UNLESS THEY ARE ACTING UNDER THE DIRECTION OF A LICENSED PROFESSIONAL ENGINEER, TO ALTER THIS DOCUMENT

MI90XS507F
MIAMI BEACH, FL 33141 ' 24'-6"
STEEL POLE

SHEET TITLE
TITLE SHEET

SHEET NUMBER
T-1

NOTE:
EXHIBIT PHOTO IS FOR REFERENCE USE ONLY AND SHOULD NOT BE USED FOR CONSTRUCTION PURPOSES.

EXHIBIT PHOTO

SCALE: NOT TO SCALE

1

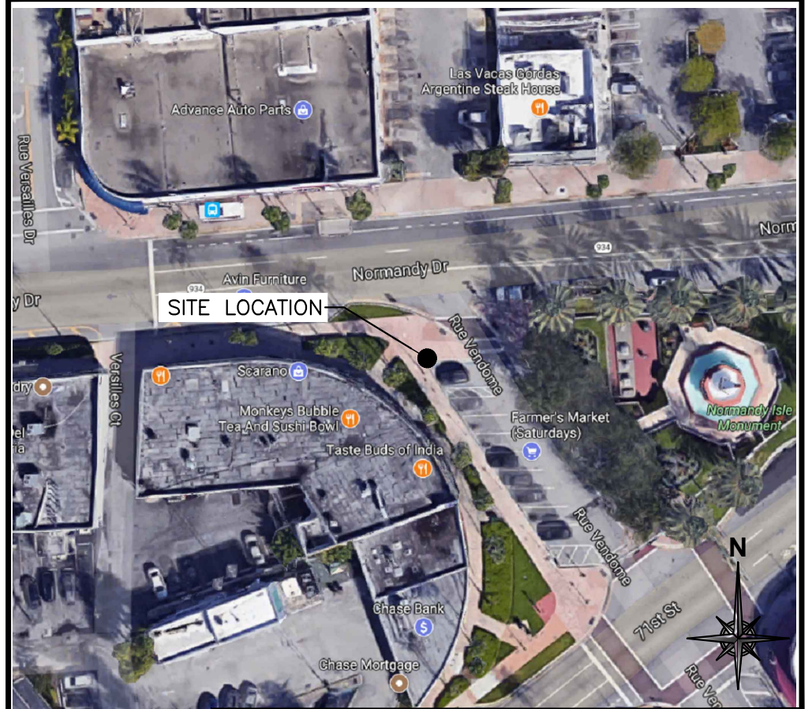

AERIAL SITE LOCATION

SCALE: NOT TO SCALE

2

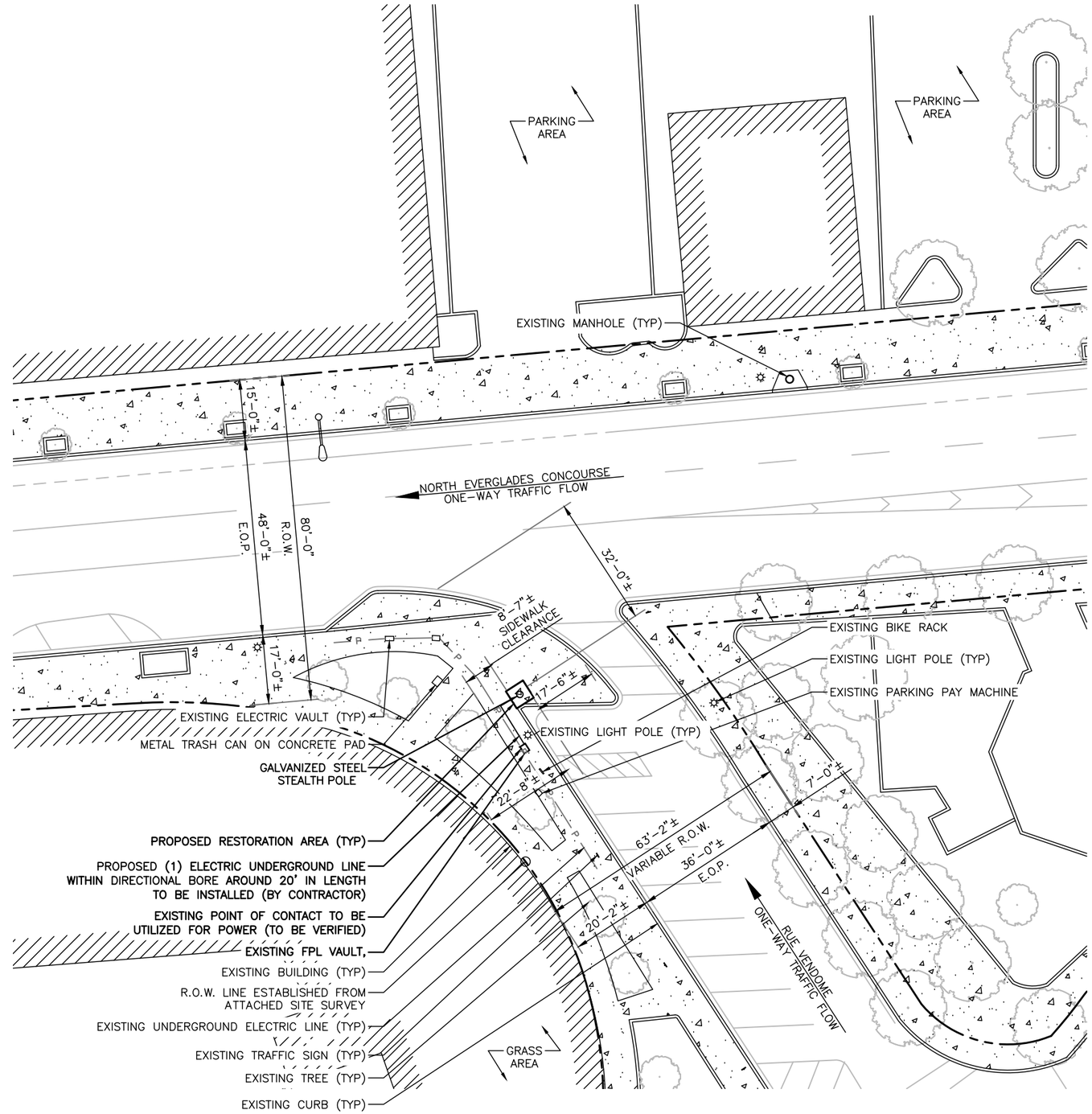

NOTE:
1. ALL DAMAGED AREAS SHALL BE RESTORED TO EQUAL OR BETTER CONDITION.
2. ALL ITEMS AND DIMENSIONS SHOULD BE VERIFIED IN THE FIELD.
3. GENERAL CONTRACTORS ARE REQUIRED TO CROSS CHECK COORDINATES, AERIAL PHOTO AND SITE PLAN TO ENSURE PROPER POLE LOCATION PRIOR TO BREAKING GROUND. CONCERNS OR QUESTIONS SHOULD BE IMMEDIATELY DIRECTED TO THE ASSIGNED MOBILITIE CM.

SITE PLAN

SCALE: 1" = 30'-0" (1" = 15'-0" ON 24"x36" SHEET)

3

mobilitie

PROJECT NO:	9FLB000962F
DRAWN BY:	RC
CHECKED BY:	SJB

D	01–09–18	REVISION
C	11–28–17	REVISION
B	10–15–17	REVISION
A	09–03–17	FOR CLIENT REVIEW

KMB DESIGN GROUP, LLC

Stephen A. Bray

PROFESSIONAL ENGINEER

STEPHEN A. BRAY
LICENSE
No.68902
STATE OF
FLORIDA
PROFESSIONAL ENGINEER

FL LICENSE 68902 1/9/18

IT IS A VIOLATION OF THE LAW FOR ANY PERSON, UNLESS THEY ARE ACTING UNDER THE DIRECTION OF A LICENSED PROFESSIONAL ENGINEER, TO ALTER THIS DOCUMENT

MI90XS507F
MIAMI BEACH, FL 33141 ' 24'-6"
STEEL POLE

SHEET TITLE
EXHIBIT PHOTO & SITE PLAN

SHEET NUMBER
SP-1

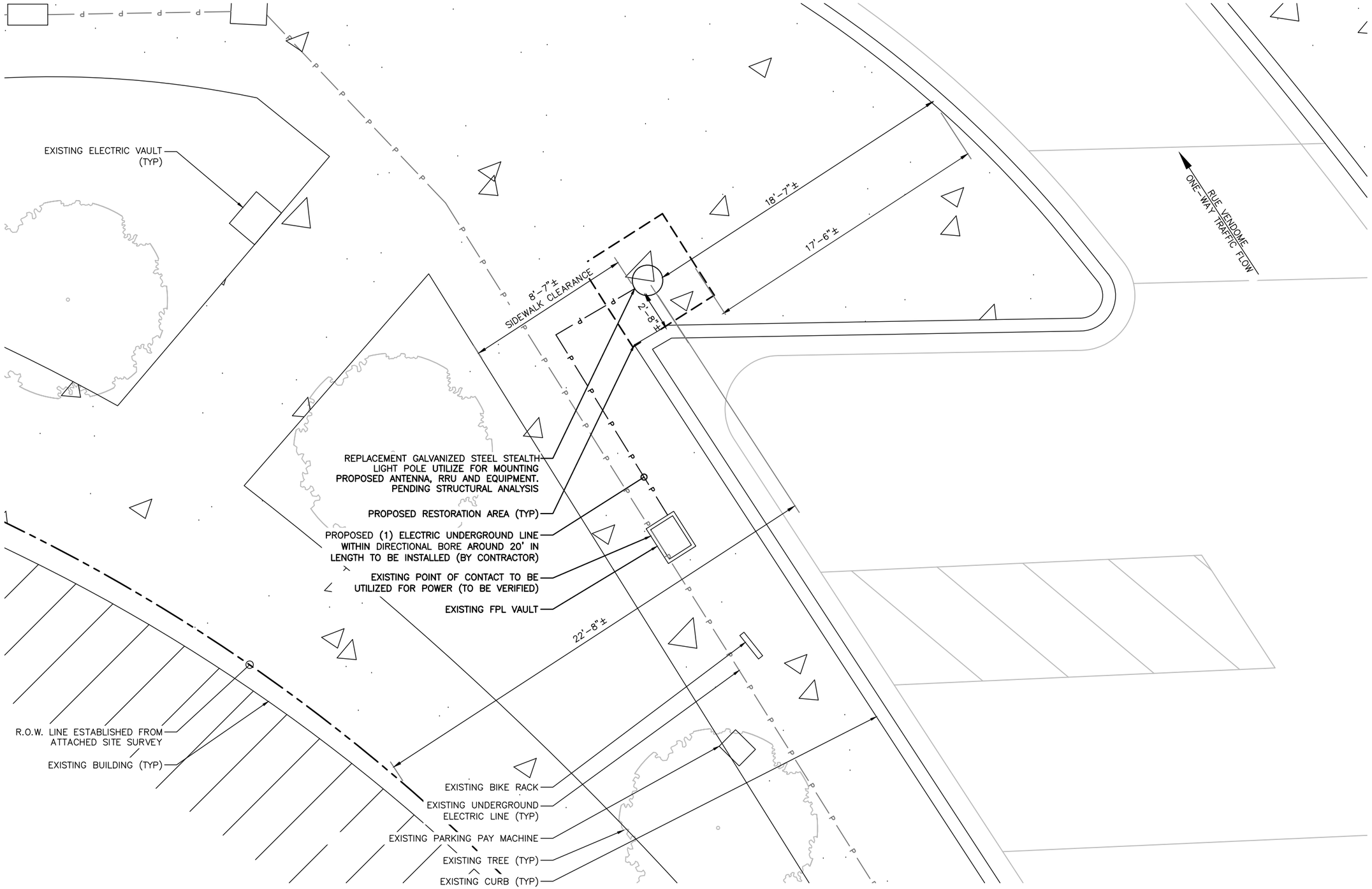

NOTE:
1. ALL DAMAGED AREAS SHALL BE RESTORED TO EQUAL OR BETTER CONDITION.
2. ALL ITEMS AND DIMENSIONS SHOULD BE VERIFIED IN THE FIELD.
3. GENERAL CONTRACTORS ARE REQUIRED TO CROSS CHECK COORDINATES, AERIAL PHOTO AND SITE PLAN TO ENSURE PROPER POLE LOCATION PRIOR TO BREAKING GROUND. CONCERNS OR QUESTIONS SHOULD BE IMMEDIATELY DIRECTED TO THE ASSIGNED MOBILITIE CM.

N

ENLARGED SITE PLAN

SCALE: 1" = 5'-0"

1

mobilitie

PROJECT NO:	9FLB000962F
DRAWN BY:	RC
CHECKED BY:	SJB

D	01-09-18	REVISION
C	11-28-17	REVISION
B	10-15-17	REVISION
A	09-03-17	FOR CLIENT REVIEW

KMB DESIGN GROUP, LLC
Stephen A. Bray
PROFESSIONAL ENGINEER
STEPHEN A. BRAY
LICENSE
No.68902
STATE OF FLORIDA
PROFESSIONAL ENGINEER
FL LICENSE No.68902
1/9/18

IT IS A VIOLATION OF THE LAW FOR ANY PERSON, UNLESS THEY ARE ACTING UNDER THE DIRECTION OF A LICENSED PROFESSIONAL ENGINEER, TO ALTER THIS DOCUMENT

MI90XS507F
MIAMI BEACH, FL 33141 ' 24'-6"
STEEL POLE

SHEET TITLE
ENLARGED SITE PLAN

SHEET NUMBER
SP-3

NOTE:
POLE FINISH: GALVANIZED PER ASTM123
AND POWDER COATED (COLOR TBD.)

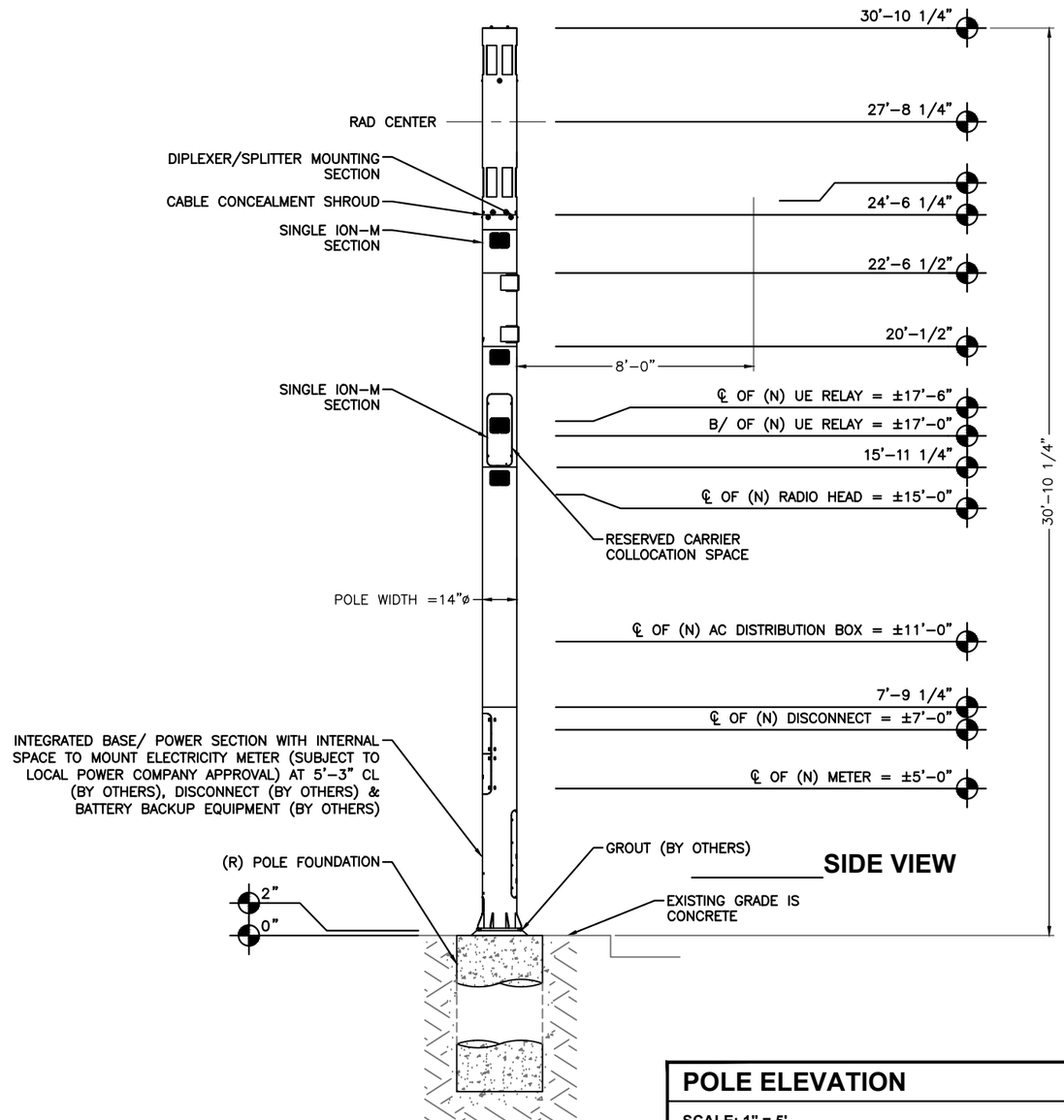

SIDE VIEW

NOTE:
REFER TO STRUCTURAL ANALYSIS REPORT MI90XS507F (SEPARATE DOCUMENT) FOR ADDITIONAL STRUCTURAL INFORMATION.

POLE ELEVATION

SCALE: 1" = 5'

1

mobilitie

PROJECT NO:	9FLB000962F
DRAWN BY:	RC
CHECKED BY:	SJB

D	01–09–18	REVISION
C	11–28–17	REVISION
B	10–15–17	REVISION
A	09–03–17	FOR CLIENT REVIEW

KMB DESIGN GROUP, LLC
Stephen A. Bray
PROFESSIONAL ENGINEER
STEPHEN A. BRAY
LICENSE
No.68902
STATE OF
FLORIDA
PROFESSIONAL ENGINEER
FL LICENSE #68902
1/9/18

IT IS A VIOLATION OF THE LAW FOR ANY PERSON, UNLESS THEY ARE ACTING UNDER THE DIRECTION OF A LICENSED PROFESSIONAL ENGINEER, TO ALTER THIS DOCUMENT

MI90XS507F
MIAMI BEACH, FL 33141 ' 24'-6"
STEEL POLE

SHEET TITLE
POLE ELEVATIONS

SHEET NUMBER
EV-1

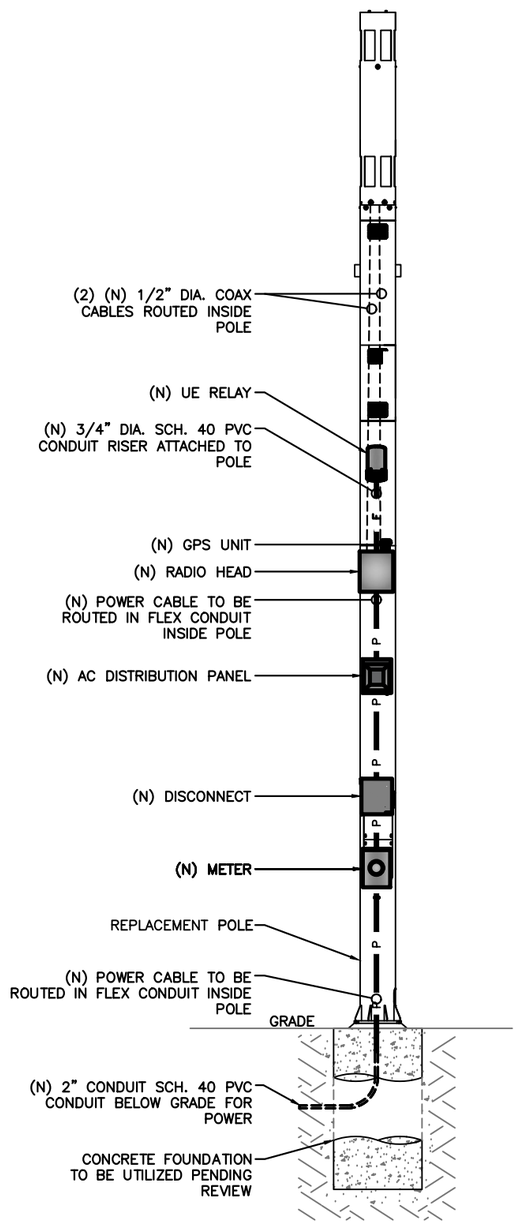

NOTE:
NOTE: ALL CABLING, EQUIPMENT, AND APPURTENANCES TO BE INSTALLED INTERNAL TO STEALTH POLE

NOTE:
CABLING DIAGRAM IS FOR CLARITY OF CABLE ROUTE AND TERMINATION ONLY. CONTRACTOR SHALL INSTALL CABLES WITH MINIMAL VISUAL IMPACT ON REPLACEMENT GALVANIZED STEEL STEALTH LIGHT POLE. SEE ELEVATION DRAWING FOR EQUIPMENT AND ANTENNA LOCATIONS.

CABLING NOTES:

A) WOOD, CONCRETE AND EXISTING METALLIC POLES
I) FROM GRADE LINE TO 11'–0" ABOVE GRADE, ALL CABLES/CONDUCTORS EXCEPT GROUNDING CONDUCTOR MUST RUN IN RIGID GALVANIZED STEEL CONDUIT (RGS)

II) GROUNDING CONDUCTORS IN EXPOSED LOCATIONS MUST BE INSTALLED IN PVC.

III) IN EARTH INSTALL PVC CONDUIT FOR BACKHAUL AND ELECTRICAL SERVICE. TRANSITION TO RGS AT GRADE LINE.

IV) ABOVE 11'–0" ALL CABLES (POWER, ETHERNET, COAXIAL) MUST RUN IN PVC UTILITY POLE RISER.

(1) AT MAJOR EQUIPMENT, EXTEND UTILITY DUCT IMMEDIATELY ADJACENT TO THE EQUIPMENT. INSTALL CABLES IN THE UTILITY POLE RISER CREATING CABLE DRIP LOOPS NOT LESS THAN THE CABLE BENDING RADIUS.

(2) INSIDE THE UTILITY POLE RISER, UTILIZE ½" COAX BLOCKS WITH LAG SCREWS TO SUPPORT COAX, RADIO AND MW POWER, RF COAX, AND ETHERNET CABLES TO WITHIN 12" OF THE EQUIPMENT BEING SERVED AND ON INTERVALS NOT TO EXCEED 6'.

V) FOR UNDERGROUND HFC/PUBLIC BACKHAUL, ROUTE ETHERNET CABLE IN CONDUIT UP THE POLE AND ENTER THE UTILITY POLE RISER. SEAL EXPOSED END OF CONDUIT WITH A CABLE TERMINATION FITTING.

VI) BY APPROVAL IN SELECT CASES LIQUID–TIGHT FLEXIBLE METALLIC CONDUIT (LFMC) MAY BE USED IN LENGTHS NOT TO EXCEED 36" TO EXTEND THE ELECTRICAL SERVICE CONDUIT TO THE AC DISTRIBUTION BOX. EXAMPLE: UTILITY–REQUIRED DISCONNECT ON POLE W/ AC DISTRIBUTION BOX ON OPPOSITE SIDE OF POLE. NOT REQUIRED FOR COAX.

B) NEW METALLIC POLES

I) PROCURE NEW POLES WITH SUITABLE HAND HOLES SUCH THAT HAND HOLES EXIST AT ALL EQUIPMENT LOCATIONS.

(1) WITH CLIENT APPROVAL IN SELECT CASES TO FACILITATE IMPROVED APPEARANCE, ½" COAXIAL CABLES MAY BE "SUPERFLEX" IN LIEU OF LDF–4.

II) WHERE POSSIBLE, INSTALL POLE BASE SUCH THAT THE ELECTRICAL FEED AND BACKHAUL (IF UNDERGROUND) CIRCUIT ENTER THE POLE THROUGH THE POLE BASE. IF A DISCONNECTING MEANS SEPARATE FROM THE AC DISTRIBUTION BOX IS REQUIRED BY JURISDICTION OR UTILITY, WITH APPROVAL IN SELECT CASES LIQUID–TIGHT FLEXIBLE METALLIC CONDUIT (LFMC) MAY BE USED IN LENGTHS NOT TO EXCEED 36" TO EXTEND THE ELECTRICAL SERVICE CONDUIT TO THE AC DISTRIBUTION BOX.

PLUMBING DIAGRAM

SCALE: NOT TO SCALE

1

BILL OF MATERIALS

QTY.	DESCRIPTION	MANUFACTURER	MODEL NUMBER	AZIMUTH	CABLE	DIMENSIONS (HxWxD)	WEIGHT
1	ANTENNA	ALPHA WIRELESS	AW3477–S	TBD	12'–6"±	30.7" X 4.7" DIAMETER	7 LBS
1	UE RELAY	AIRSPAN	iR460–SPB–ST–1–P–0	TBD	3'±	13" X 7" DIAMETER	8.8 LBS
–	–	–	–	–	–	–	–
1	GPS	TALLYSMAN	GPS–ANT–3	–	–	2" X 2.6" DIAMETER	0.3 LBS
1	RADIO	AIRSPAN	AH4000	–	3'±	20.3" X 10.3" X 8.3"	42 LBS
–	–	–	–	–	–	–	–
1	AC DISTRIBUTION PANEL	TRANSTECTOR	1101–1207–1012	–	1'±	12" X 12" X 4"	17 LBS
1	NEMA TYPE–3R DISCONNECT	SIEMENS	GF222NR (EXAMPLE)	–	1'±	15.45" X 8.7" X 5.95"	14 LBS
1	METER SOCKET	MILBANK	U4801–XL–5T9 (EXAMPLE)	–	20'±	19" X 13" X 4.84"	21 LBS

RFDS REVISION TYPE: NOT FINAL
RFDS REVISION NUMBER: N/A
RFDS REVISION TIMESTAMP: N/A

BILL OF MATERIALS

SCALE: NOT TO SCALE

2

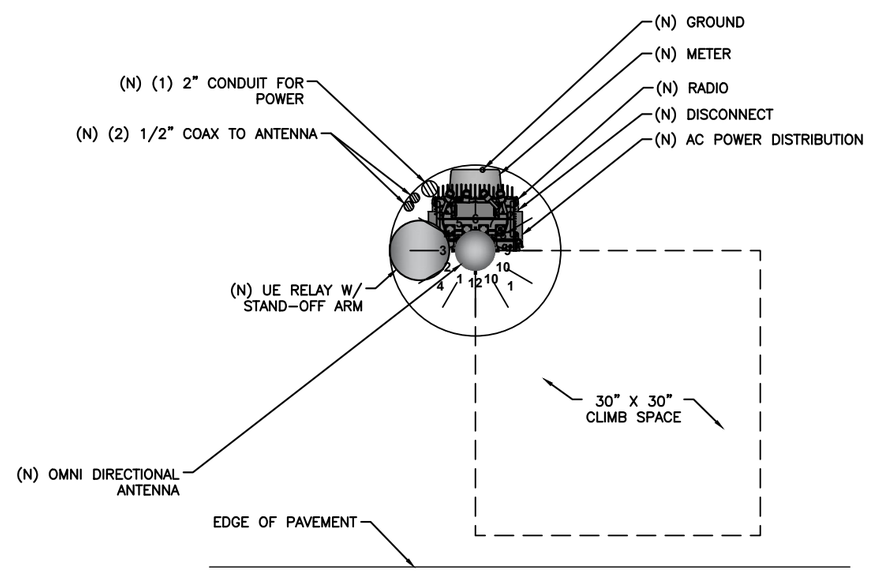

RISER ORIENTATION DIAGRAM

SCALE: NOT TO SCALE

3

mobilitie

PROJECT NO:	9FLB000962F
DRAWN BY:	RC
CHECKED BY:	SJB

D	01–09–18	REVISION
C	11–28–17	REVISION
B	10–15–17	REVISION
A	09–03–17	FOR CLIENT REVIEW

KMB DESIGN GROUP, LLC
Stephen A. Bray
PROFESSIONAL ENGINEER
STEPHEN A. BRAY
LICENSE
No.68902
STATE OF
FLORIDA
PROFESSIONAL ENGINEER
FL LICENSE #68902
1/9/18

IT IS A VIOLATION OF THE LAW FOR ANY PERSON, UNLESS THEY ARE ACTING UNDER THE DIRECTION OF A LICENSED PROFESSIONAL ENGINEER, TO ALTER THIS DOCUMENT

MI90XS507F
MIAMI BEACH, FL 33141 ' 24'-6"
STEEL POLE

SHEET TITLE
PLUMBING & RISER DIAGRAM

SHEET NUMBER
PL-1

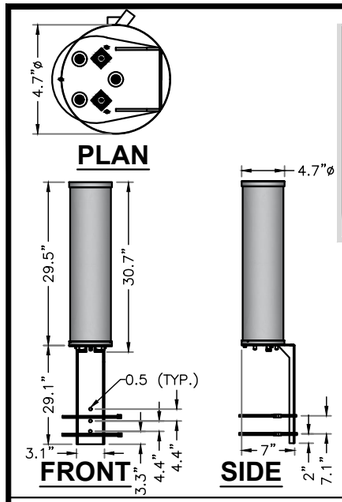

MANUFACTURER: ALPHA WIRELESS
MODEL: AW3477-S
HEIGHT: 30.7 IN
DIAMETER: 4.7 IN Ø
WEIGHT: 7 LBS
MOUNT WEIGHT: 4.4 LBS

ALPHA AW3477-S OMNI (B41) | SCALE N.T.S. | 1

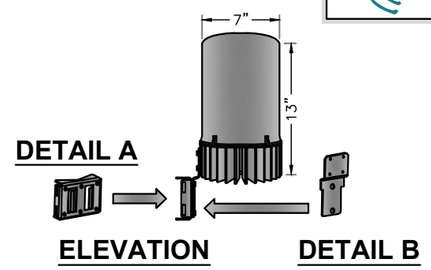

MANUFACTURER: AIRSPAN
MODEL: iR460
(OR APPROVED EQUAL)
HEIGHT: 13 IN
DIAMETER: 7 INØ
WEIGHT: 8.8 LBS

UE RELAY iR460-SPB-ST-1-P-0 | SCALE N.T.S. | 4

NOT USED | SCALE N.T.S. | 7

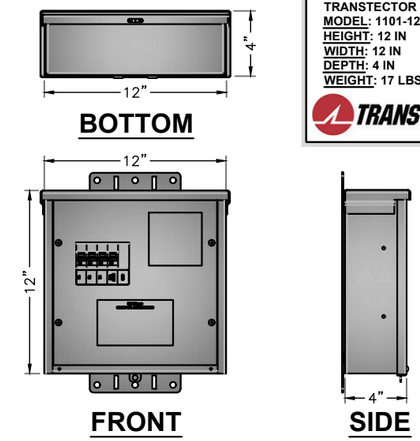

MANUFACTURER: TRANSTECTOR
MODEL: 1101-1207-1012
HEIGHT: 12 IN
WIDTH: 12 IN
DEPTH: 4 IN
WEIGHT: 17 LBS

TRANSTECTOR 1101-1207-1012 | SCALE N.T.S. | 10

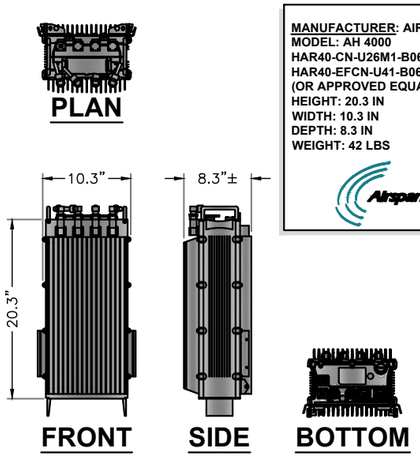

MANUFACTURER: AIRSPAN
MODEL: AH 4000
HAR40-CN-U26M1-B06AP1 (B26)
HAR40-EFCN-U41-B06AP1 (B41)
(OR APPROVED EQUAL)
HEIGHT: 20.3 IN
WIDTH: 10.3 IN
DEPTH: 8.3 IN
WEIGHT: 42 LBS

AIRSPAN RADIO AH4000 | SCALE N.T.S. | 2

NOT USED | SCALE N.T.S. | 5

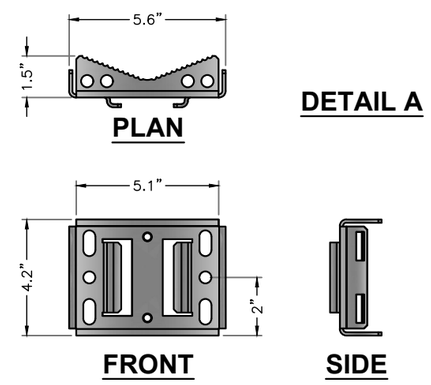

iR460 FLUSH MOUNT | SCALE N.T.S. | 8

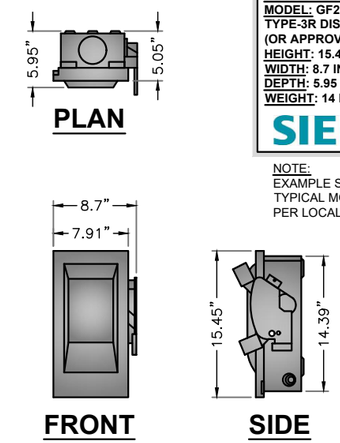

MANUFACTURER: SIEMENS
MODEL: GF222NR
TYPE-3R DISCONNECT
(OR APPROVED EQUAL)
HEIGHT: 15.45 IN
WIDTH: 8.7 IN
DEPTH: 5.95 IN
WEIGHT: 14 LBS

NOTE:
EXAMPLE SHOWN MAY NOT BE TYPICAL MODEL, SELECT AS PER LOCAL REQUIREMENTS

NEMA TYPE-3R DISCONNECT | SCALE N.T.S. | 11

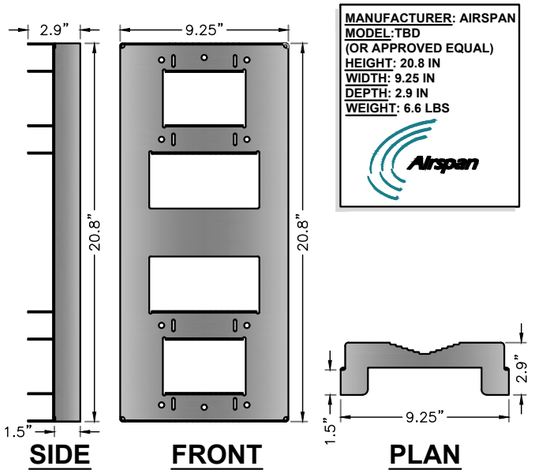

MANUFACTURER: AIRSPAN
MODEL:TBD
(OR APPROVED EQUAL)
HEIGHT: 20.8 IN
WIDTH: 9.25 IN
DEPTH: 2.9 IN
WEIGHT: 6.6 LBS

AIRSPAN RADIO MOUNT | SCALE N.T.S. | 3

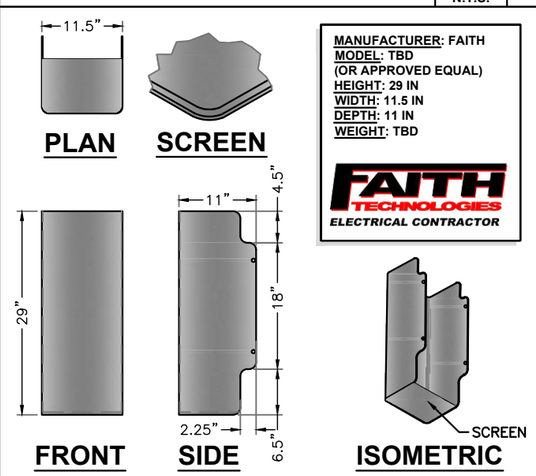

MANUFACTURER: FAITH
MODEL: TBD
(OR APPROVED EQUAL)
HEIGHT: 29 IN
WIDTH: 11.5 IN
DEPTH: 11 IN
WEIGHT: TBD

AIRSPAN SUN SHIELD | SCALE N.T.S. | 6

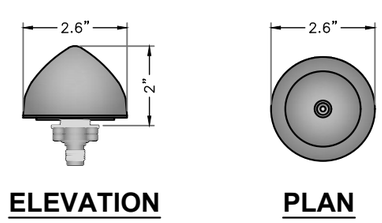

MANUFACTURER: TALLYSMAN
MODEL: GPS-ANT-3
HEIGHT: 2 IN
DIAMETER: 2.6 IN
WEIGHT: 0.3 LBS

TALLYSMAN GPS UNIT | SCALE N.T.S. | 9

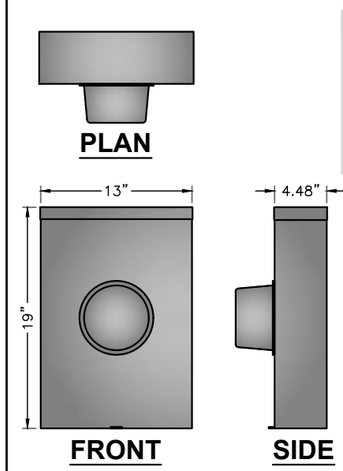

MANUFACTURER: MILBANK
MODEL: U4801-XL-5T9
(OR APPROVED EQUAL)
HEIGHT: 19 IN
WIDTH: 13 IN
DEPTH: 4.84 IN
WEIGHT: 21 LBS

NOTE:
EXAMPLE SHOWN MAY NOT BE TYPICAL MODEL, SELECT AS PER LOCAL REQUIREMENTS

MILBANK METER SOCKET | SCALE N.T.S. | 12

mobilitie

PROJECT NO:	9FLB000962F
DRAWN BY:	RC
CHECKED BY:	SJB

D	01-09-18	REVISION
C	11-28-17	REVISION
B	10-15-17	REVISION
A	09-03-17	FOR CLIENT REVIEW

KMB DESIGN GROUP, LLC
Stephen A. Bray
PROFESSIONAL ENGINEER
STEPHEN A. BRAY
LICENSE
No.68902
STATE OF
FLORIDA
PROFESSIONAL ENGINEER
FL LICENSE #68902
1/9/18

IT IS A VIOLATION OF THE LAW FOR ANY PERSON, UNLESS THEY ARE ACTING UNDER THE DIRECTION OF A LICENSED PROFESSIONAL ENGINEER, TO ALTER THIS DOCUMENT

MI90XS507F
MIAMI BEACH, FL 33141 ' 24'-6"
STEEL POLE

SHEET TITLE
EQUIPMENT DETAILS

SHEET NUMBER
EQ-1

NOT USED

SCALE: NOT TO SCALE

1

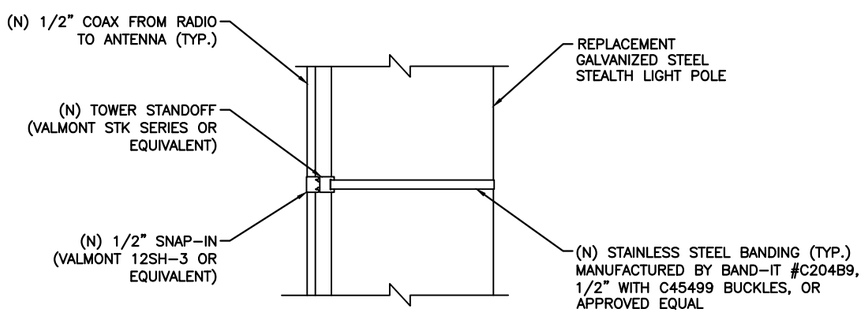

NOTE:
SPACE SNAP-INS PER CABLE MANUFACTURER'S SPECIFICATIONS

CABLE MOUNTING DETAIL

SCALE: NOT TO SCALE

2

NOT USED

SCALE: NOT TO SCALE

3

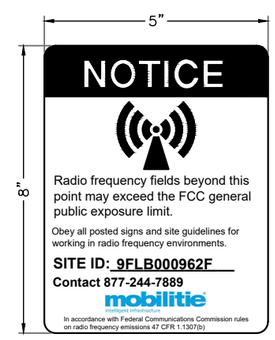

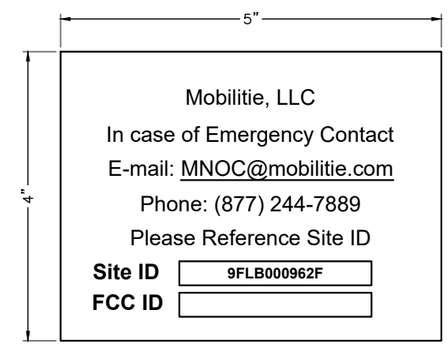

ANTENNA SIGNAGE:
ON METAL POLES – ADHESIVE VINYL OR PLACARD STRAPPED WITH SS TIES
SIGN PLACEMENT:
AFFIX TO THE STRUCTURE 3–4' BELOW THE COMMERCIAL RF ANTENNA(S)
SIZE APPROX. 8" x 5"

ANTENNA SIGNAGE

OWNER / OPERATOR NOTE:
SITE ID LABEL TO BE AFFIXED AT OR NEAR THE POINT OF POWER CONNECTION WITH TZeS241 LABELING TAPE OR EQUIVALENT BLACK ON WHITE LABELING TAPE OF AT LEAST 18mm WIDTH WITH EXTRA-STRENGTH ADHESIVE. USE ANY COMPATIBLE P-TOUCH LABEL MAKER. TEXT SHOULD BE PRINTED IN ALL CAPS WITH A MINIMUM HEIGHT OF 1/2".

EMERGENCY CONTACT SIGN

POLE MOUNTED SIGNS

SCALE: NOT TO SCALE

4

mobilitie

PROJECT NO:	9FLB000962F
DRAWN BY:	RC
CHECKED BY:	SJB

D	01-09-18	REVISION
C	11-28-17	REVISION
B	10-15-17	REVISION
A	09-03-17	FOR CLIENT REVIEW

KMB DESIGN GROUP, LLC
Stephen A. Bray
PROFESSIONAL ENGINEER
STEPHEN A. BRAY
LICENSE
No.68902
STATE OF FLORIDA
PROFESSIONAL ENGINEER
FL LICENSE #68902
1/9/18

IT IS A VIOLATION OF THE LAW FOR ANY PERSON, UNLESS THEY ARE ACTING UNDER THE DIRECTION OF A LICENSED PROFESSIONAL ENGINEER, TO ALTER THIS DOCUMENT

MI90XS507F
MIAMI BEACH, FL 33141 ' 24'-6"
STEEL POLE

SHEET TITLE
EQUIPMENT DETAILS

SHEET NUMBER
EQ-2

NOT USED

SCALE: NOT TO SCALE

1

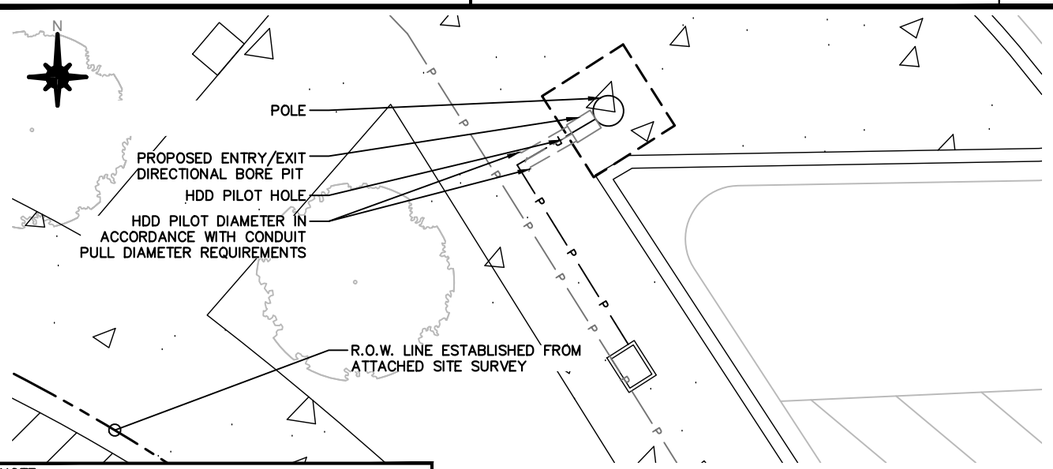

NOTE:
1. ALL HDD CONTRACTORS SHALL BE LICENSED AS "A" OR "C3" CONTRACTORS IN THE APPLICABLE STATE.
2. ALL WORK SHALL BE COMPLETED IN ACCORDANCE WITH TR-46 AND ASTM F1962-11

HORIZONTAL BORE PLAN

SCALE: NOT TO SCALE

2

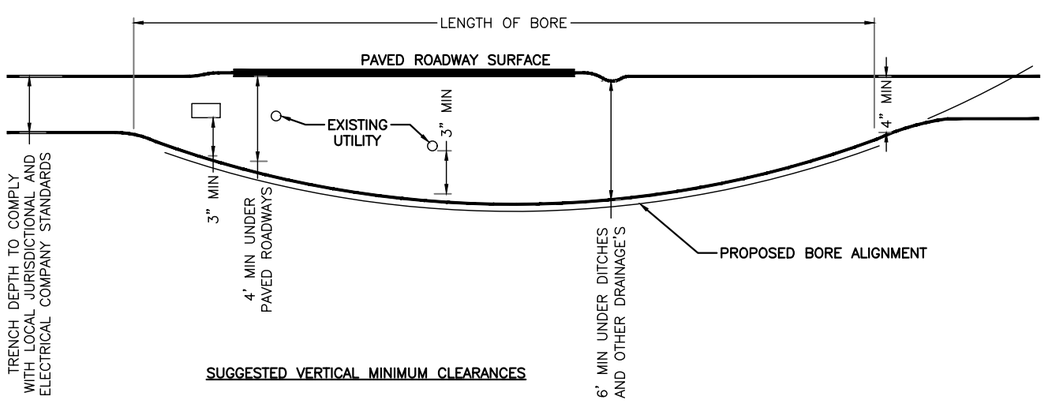

DIRECTIONAL BORING DETAILS

SCALE: NOT TO SCALE

3

NOT USED

SCALE: NOT TO SCALE

4

NOT USED

SCALE: NOT TO SCALE

5

mobilitie

PROJECT NO:	9FLB000962F
DRAWN BY:	RC
CHECKED BY:	SJB

D	01-09-18	REVISION
C	11-28-17	REVISION
B	10-15-17	REVISION
A	09-03-17	FOR CLIENT REVIEW

KMB DESIGN GROUP, LLC

Stephen A. Bray

PROFESSIONAL ENGINEER

STEPHEN A. BRAY LICENSE No.68902 STATE OF FLORIDA PROFESSIONAL ENGINEER

FL LICENSE #68902 1/9/18

IT IS A VIOLATION OF THE LAW FOR ANY PERSON, UNLESS THEY ARE ACTING UNDER THE DIRECTION OF A LICENSED PROFESSIONAL ENGINEER, TO ALTER THIS DOCUMENT

MI90XS507F

MIAMI BEACH, FL 33141 ' 24'-6"

STEEL POLE

SHEET TITLE

EXCAVATION DETAILS

SHEET NUMBER

EX-1

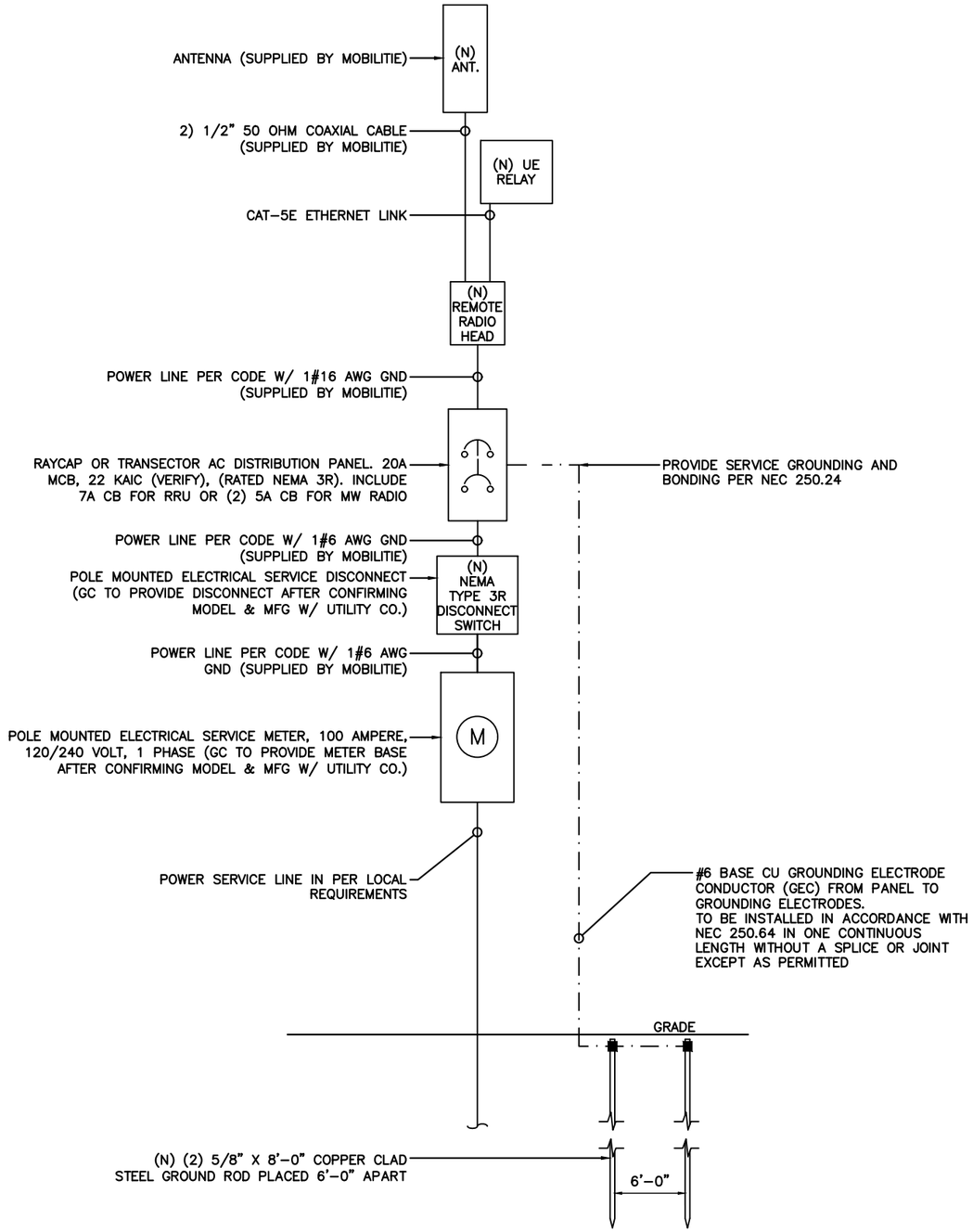

ONE-LINE DIAGRAM

SCALE: NOT TO SCALE

1

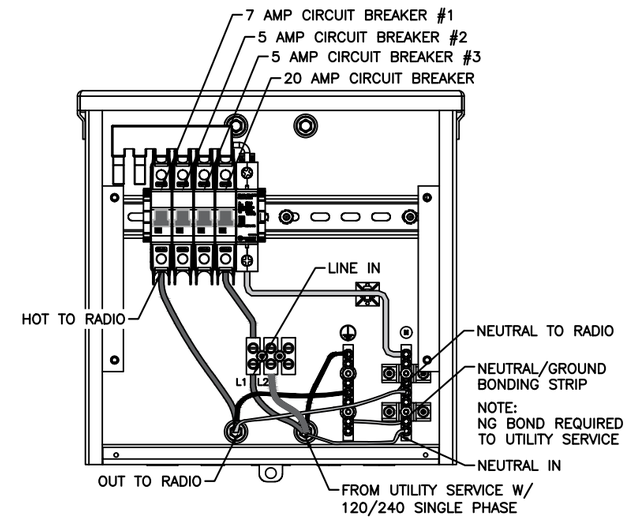

TRANSTECTOR EXPORT AC DISTRIBUTION BOX

BREAKER SCHEDULE

SCALE: NOT TO SCALE

2

NOTES:

1. NOMINAL POWER IS CALCULATED AS 80% OF OEM DOCUMENTED MAXIMUM POWER.
2. CALCULATIONS FOR UE W/ NOKIA DO NOT NEED TO INCLUDE THE POWER FOR THE UE ANTENNA AS IT IS INCLUDED IN THE MAX POWER FIGURE. CALCULATIONS FOR UE W/ AIRSPAN MUST INCLUDE UE AS IT IS NOT INCLUDED
3. KVA IS CALCULATED FROM THE CONSUMPTION VALUE ASSUMING A PF=1. MAXIMUM POWER WAS USED FOR KVA. WHERE MAXIMUM WAS NOTED BY THE OEM THE QUOTED FIGURE WAS USED. WHERE AVERAGE/NOMINAL POWER WAS NOTED BY THE OEM MAXIMUM POWER WAS CALCULATED BY INCREASING AVERAGE/NOMINAL POWER BY A FACTOR OF 50%

Airspan Scenario 2 AH4000 High Power Radio and UE Backhaul

Unit	Sub Description	Max Power (W)	Max Current (A)	KVA	kWh/Yr
AirHarmony 4000	LTE Base Station	540	4.50	0.54	4730.4
Airspan IR460	UE Relay	N/A	N/A	N/A	N/A
Total		**540**	**4.50**	**0.54**	**4730.4**

LOAD CALCULATIONS

SCALE: NOT TO SCALE

3

mobilitie

PROJECT NO:	9FLB000962F
DRAWN BY:	RC
CHECKED BY:	SJB

D	01-09-18	REVISION
C	11-28-17	REVISION
B	10-15-17	REVISION
A	09-03-17	FOR CLIENT REVIEW

KMB DESIGN GROUP, LLC

Stephen A. Bray

PROFESSIONAL ENGINEER

STEPHEN A. BRAY LICENSE No.68902 STATE OF FLORIDA PROFESSIONAL ENGINEER

FL LICENSE: 68902 1/9/18

IT IS A VIOLATION OF THE LAW FOR ANY PERSON, UNLESS THEY ARE ACTING UNDER THE DIRECTION OF A LICENSED PROFESSIONAL ENGINEER, TO ALTER THIS DOCUMENT

MI90XS507F
MIAMI BEACH, FL 33141 ' 24'-6"
STEEL POLE

SHEET TITLE
ELECTRICAL DETAILS

SHEET NUMBER
E-1

NOTE:
CONTRACTOR TO SURROUND COMPLETED CONNECTION WITH HEAT–SHRINK TUBING TO ENSURE WEATHER PROOF CONNECTION

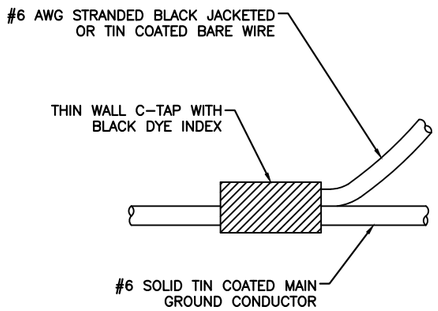

C-TAP DETAIL

SCALE: NOT TO SCALE

1

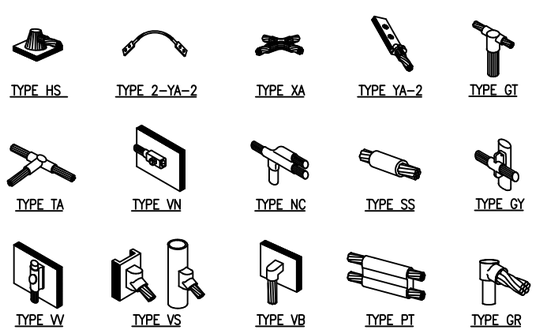

NOTE:

ERICO EXOTHERMIC "MOLD TYPES" SHOWN HERE ARE EXAMPLES. CONSULT WITH PROJECT MANAGER FOR SPECIFIC MOLDS TO BE USED FOR THIS PROJECT.

WELD CONNECTION DETAILS

SCALE: NOT TO SCALE

2

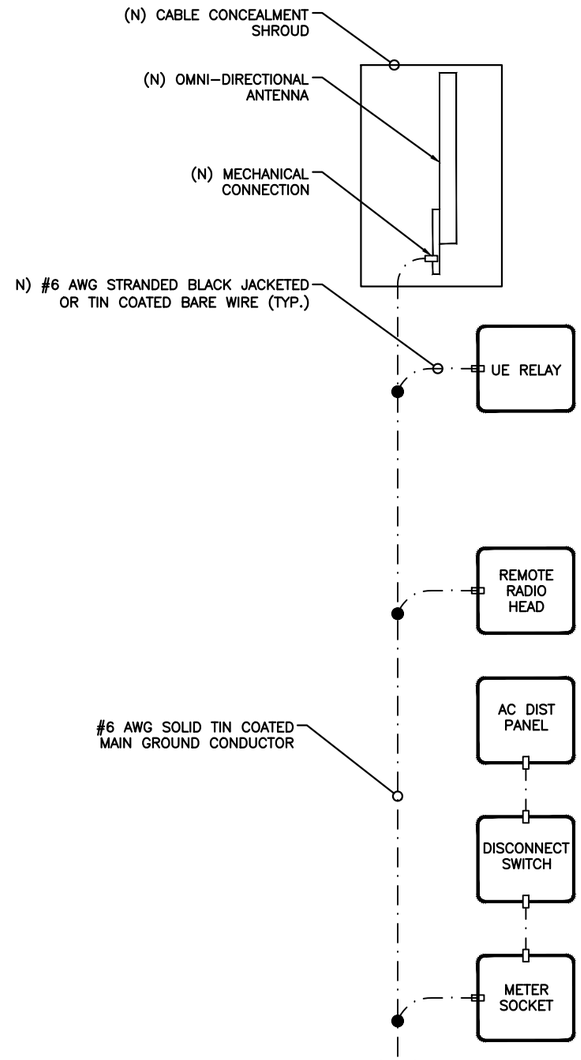

LEGEND
- ■ CADWELD CONNECTION
- ▭ MECHANICAL CONNECTION
- ● COMPRESSION CONNECTION

NOTE:
GROUNDING RISER FOR DIAGRAMMATIC PURPOSES ONLY. SEE ELEVATION DRAWING FOR EQUIPMENT AND ANTENNA LOCATIONS.

NOTES:

1. ALL RGS TO BE GROUNDED AT BOTH ENDS USING GROUNDING BUSHINGS
2. GROUND WIRE TO BE RUN IN 1/2" SCHEDULE 40 PVC.

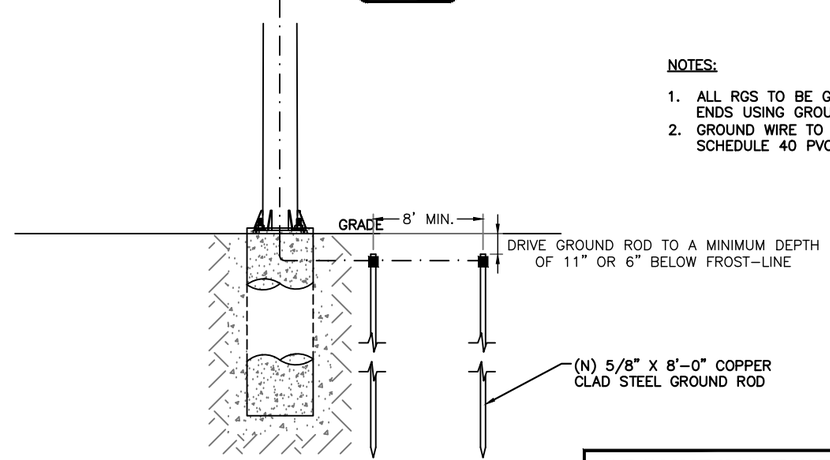

GROUNDING RISER DIAGRAM

SCALE: NOT TO SCALE

3

mobilitie

PROJECT NO:	9FLB000962F
DRAWN BY:	RC
CHECKED BY:	SJB

D	01–09–18	REVISION
C	11–28–17	REVISION
B	10–15–17	REVISION
A	09–03–17	FOR CLIENT REVIEW

KMB DESIGN GROUP, LLC
Stephen A. Bray
PROFESSIONAL ENGINEER
STEPHEN A. BRAY
LICENSE
No.68902
STATE OF
FLORIDA
PROFESSIONAL ENGINEER
FL LICENSE 68902
1/9/18

IT IS A VIOLATION OF THE LAW FOR ANY PERSON, UNLESS THEY ARE ACTING UNDER THE DIRECTION OF A LICENSED PROFESSIONAL ENGINEER, TO ALTER THIS DOCUMENT

MI90XS507F
MIAMI BEACH, FL 33141 ' 24'-6"
STEEL POLE

SHEET TITLE
GROUNDING DETAILS

SHEET NUMBER
G-1

REINFORCED CONCRETE NOTES:

1. ALL CONCRETE WORK SHALL BE IN ACCORDANCE WITH THE ACI 301, ACI 318, ACI 336, ASTM A184, ASTM A185 AND THE DESIGN & CONSTRUCTION SPECIFICATION FOR CAST–IN–PLACE CONCRETE.

2. ALL SITECAST CONCRETE SHALL HAVE A MINIMUM COMPRESSIVE STRENGTH OF 3000 PSI WITHIN 28 DAYS. CONTINUOUS INSPECTION AND TESTING IS NOT REQUIRED. THE CONTRACTOR MAY SUBSTITUTE 5000 PSI FOR HIGH EARLY STRENGTH.

   SLUMP – 4" MIN. / 6" MAX.
   AIR ENTRAINMENT – 2% TO 3% BY VOLUME

   CLASSES OF CONCRETE

CLASS	28 DAY STRENGTH (PSI)	MAX. WATER/CEMENT RATIO	PLACEMENT LOCATION	
TYPE 1	3000	0.55	ALL LOCATIONS	NORMAL WEIGHT

3. REINFORCING STEEL SHALL CONFORM TO ASTM A615, GRADE 60, DEFORMED UNLESS NOTED OTHERWISE. WELDED WIRE FABRIC SHALL CONFORM TO ASTM A185 WELDED STEEL FABRIC UNLESS OTHERWISE NOTED. SPLICES FOR REBAR SHALL BE CLASS 'B' AND ALL HOOKS SHALL BE STANDARD, UNO. STAGGER SPLICES UNO. LAPS FOR WELDED WIRE FABRIC SHALL BE AT LEAST TWO FULL MESHES, UNO.

4. THE FOLLOWING MINIMUM CONCRETE COVER SHALL BE PROVIDED FOR REINFORCING STEEL UNLESS OTHERWISE NOTED ON DRAWINGS:

   CONCRETE CAST AGAINST EARTH.....3"
   CONCRETE EXPOSED TO EARTH OR WEATHER
   #6 AND LARGER.....2"
   #5 AND SMALLER & W.W.F.....1–1/2"

5. MAXIMUM COARSE AGGREGATE SIZE SHALL BE 3/4".

6. INSTALLATION OF CONCRETE ANCHORS SHALL BE IN ACCORDANCE WITH THE MANUFACTURER'S WRITTEN SPECIFICATIONS. THE ANCHOR BOLTS, DOWEL, OR RODS SHALL CONFORM TO THE ANCHOR MANUFACTURER'S SPECIFICATIONS FOR MATERIAL STRENGTH, EMBEDMENT DEPTH, SPACING, AND EDGE DISTANCE OR AS DETAILED ON THE DRAWINGS. NO REBAR SHALL BE CUT WITHOUT PRIOR ENGINEERING APPROVAL WHEN DRILLING HOLES IN CONCRETE. EXPANSION BOLTS SHALL BE PROVIDED BY RAMSET/REDHEAD, HILTI OR APPROVED EQUAL. IF THE MANUFACTURER'S SPECIFICATIONS AND DETAILS ARE FOUND TO CONFLICT WITH THAT SHOWN HEREIN, THE ENGINEER SHALL BE NOTIFIED IMMEDIATELY.

7. MECHANICAL VIBRATION IS REQUIRED ON ALL SLABS TO REDUCE THE HONEYCOMB EFFECT UNLESS OTHERWISE DIRECTED BY THE CONSTRUCTION MANAGER.

8. THE CONTRACTOR SHALL VERIFY ALL ELECTRICAL CONDUIT SIZES AND PENETRATION LOCATION PRIOR TO POURING THE SLAB. REFER TO SHELTER MANUFACTURER'S SPECIFICATIONS FOR ADDITIONAL INFORMATION.

9. ALLOWABLE SOIL PRESSURE = 2500 PSF (ASSUMED).

NOTE:
SEE GN–3 FOUNDATION, EXCAVATION AND BACKFILL FOR ADDITIONAL NOTES.

NOTE:
REFER TO STRUCTURAL ANALYSIS REPORT (SEPARATE DOCUMENT) FOR ADDITIONAL STRUCTURAL INFORMATION.

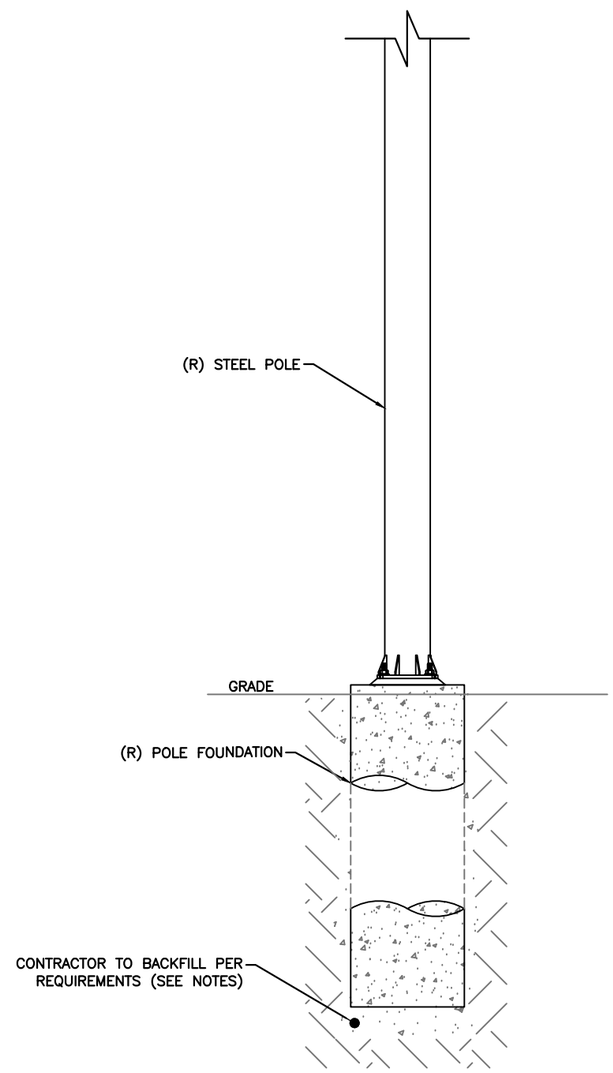

POLE FOUNDATION DETAILS

SCALE: NOT TO SCALE

1

mobilitie

PROJECT NO:	9FLB000962F
DRAWN BY:	RC
CHECKED BY:	SJB

D	01–09–18	REVISION
C	11–28–17	REVISION
B	10–15–17	REVISION
A	09–03–17	FOR CLIENT REVIEW

KMB DESIGN GROUP, LLC
Stephen A. Bray
PROFESSIONAL ENGINEER
STEPHEN A. BRAY
LICENSE
No.68902
STATE OF
FLORIDA
PROFESSIONAL ENGINEER
FL LICENSE #68902
1/9/18

IT IS A VIOLATION OF THE LAW FOR ANY PERSON, UNLESS THEY ARE ACTING UNDER THE DIRECTION OF A LICENSED PROFESSIONAL ENGINEER, TO ALTER THIS DOCUMENT

MI90XS507F
MIAMI BEACH, FL 33141 ' 24'-6"
STEEL POLE

SHEET TITLE
POLE FOUNDATION DETAILS

SHEET NUMBER
S-1

PLAN NOTES:

1. PLANS DEPICTED ARE GENERAL GUIDELINES FOR TEMPORARY VEHICULAR TRAFFIC CONTROL PLANS (TCP) TO INCLUDE PEDESTRIAN AND WORKER SAFETY. CONTRACTOR IS REQUIRED TO HAVE PREPARED A SITE-SPECIFIC TCP FOR REVIEW AND APPROVAL BY THE HIGHWAY AUTHORITY HAVING JURISDICTION. IF REQUIRED, THE FIRM PREPARING THE TCP SHALL BE AUTHORIZED OR CERTIFIED BY THE AUTHORITY HAVING JURISDICTION.
2. EXTEND CHANNELIZATION DEVICES INTO SHOULDER WHERE APPLICABLE.
3. DISTANCES AS INDICATED IN TABLE 1 SHOULD BE INCREASED FOR CONDITIONS THAT WOULD AFFECT STOPPING. DISTANCE SUCH AS DOWNGRADES OR LIMITED SIGHT DISTANCES. DISTANCES CAN BE DECREASED FOR LOW-SPEED (RESIDENTIAL) AREAS WITH APPROVAL BY THE AUTHORITY HAVING JURISDICTION. NIGHT-TIME WORK IS PROHIBITED UNLESS IT IS REQUIRED AS A CONDITION OF APPROVAL BY THE HIGHWAY AND LOCAL AUTHORITY HAVING JURISDICTION.
4. SHOULDER TAPERS SHOULD BE 1/3 OF THE ON-STREET TAPER LENGTH.
5. MAINTAIN A MINIMUM LANE WIDTH OF 10'.
6. CONTRACTOR IS REQUIRED TO INPUT ALL LANE CLOSURES ON A STATE HIGHWAY IN THE LANE CLOSURE INFORMATION SYSTEM (HTTPS://LCIS.DOT.STATE.FL.US) 14 DAYS PRIOR TO THE CLOSURE.

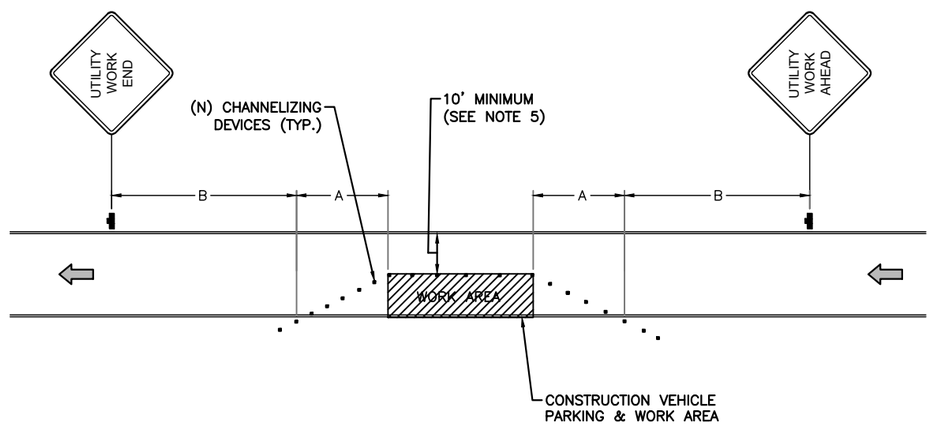

TABLE 1

POSTED SPEED (MPH)	DISTANCE BETWEEN SIGNS			TAPER	BUFFER
	A	B	C	L (SEE NOTE)	
15	100'	100'	100'	45'	100'
20	100'	100'	100'	80'	115'
25	100'	100'	100'	125'	155'
30	200'	200'	200'	180'	200'
35	200'	200'	200'	245'	250'
40	350'	350'	350'	320'	305'
45	350'	350'	350'	540'	360'
50	500'	500'	500'	600'	425'
55	500'	500'	500'	660'	495'
60	500'	500'	500'	720'	570'
65	500'	500'	500'	780'	645'

NOTES:

A) DISTANCES IN FEET UNLESS OTHERWISE NOTED.
B) CONTRACTOR TO VERIFY (E) SPEED LIMIT.
C) DISTANCES SHOWN ARE NOT VALID FOR LIMITED ACCESS HIGHWAYS. CONSULT STATE DOT MANUAL FOR DISTANCES.
D) ADJUST DISTANCES TO COMPLY WITH REQUIREMENT OF THE STATE OR LOCAL HIGHWAY AUTHORITY HAVING JURISDICTION. SEE NOTE 1, SHEET 6.1.
E) TAPER LENGTHS SHOWN BASED ON 12' LANE WIDTH. SEE NOTE 18, SHEET 6.1.

▮ – SIGN

VEHICULAR TRAFFIC CONTROL PLAN - LOW-SPEED RESIDENTIAL AREA

1

SCALE: NOT TO SCALE

mobilitie

PROJECT NO:	9FLB000962F
DRAWN BY:	RC
CHECKED BY:	SJB

D	01-09-18	REVISION
C	11-28-17	REVISION
B	10-15-17	REVISION
A	09-03-17	FOR CLIENT REVIEW

KMB DESIGN GROUP, LLC
Stephen A. Bray
PROFESSIONAL ENGINEER
STEPHEN A. BRAY LICENSE No.68902 STATE OF FLORIDA PROFESSIONAL ENGINEER
FL LICENSE #68902 1/9/18

IT IS A VIOLATION OF THE LAW FOR ANY PERSON, UNLESS THEY ARE ACTING UNDER THE DIRECTION OF A LICENSED PROFESSIONAL ENGINEER, TO ALTER THIS DOCUMENT

MI90XS507F
MIAMI BEACH, FL 33141 ' 24'-6"
STEEL POLE

SHEET TITLE
VEHICULAR TRAFFIC CONTROL PLAN

SHEET NUMBER
TC-1

TRAFFIC CONTROL GENERAL NOTES

1. ALL TEMPORARY TRAFFIC CONTROL SIGNAGE, LAYOUTS AND PROCEDURES SHALL COMPLY WITH LOCAL JURISDICTIONAL REQUIREMENTS AND MANUAL OF UNIFORM TRAFFIC CONTROL DEVICES (MUTCD), LATEST EDITION, WHICHEVER IS MORE STRINGENT.
2. PRIOR TO ANY ROAD CONSTRUCTION, TRAFFIC CONTROL SIGNS AND DEVICES SHALL BE IN PLACE.
3. TRAFFIC CONTROL DEVICES FOR LANE CLOSURES INCLUDING SIGNS, CONES, BARRICADES, ETC. SHALL BE PLACED AS SHOWN ON PLANS. SIGNS SHALL NOT BE PLACED WITHOUT ACTUAL LANE CLOSURES AND SHALL BE IMMEDIATELY REMOVED UPON REMOVAL OF THE CLOSURES.
4. SELECTION, PLACEMENT, MAINTENANCE, AND PROTECTION OF TRAFFIC, PEDESTRIANS, AND WORKERS SHALL BE IN ACCORDANCE WITH THE MANUAL OF UNIFORM TRAFFIC CONTROL DEVICES (MUTCD) – PART VI "TEMPORARY TRAFFIC CONTROL", AND LOCAL JURISDICTIONAL REQUIREMENTS UNLESS OTHERWISE NOTED IN THE PLANS AND SPECIFICATIONS, AND SHALL BE APPROVED BY THE APPROPRIATE HIGHWAY AUTHORITY HAVING JURISDICTION.
5. ADVANCE WARNING SIGNS, DISTANCES, AND TAPER LENGTHS MAY BE EXTENDED TO ADJUST FOR REDUCED VISIBILITY DUE TO HORIZONTAL AND VERTICAL CURVATURE OF THE ROADWAY AND FOR ACTUAL TRAFFIC SPEEDS IF IN EXCESS OF POSTED SPEED LIMITS.
6. TAPERS SHALL BE LOCATED TO MAXIMIZE THE VISIBILITY OF THEIR TOTAL LENGTH.
7. CONFLICTING OR NON–OPERATING SIGNAL INDICATIONS ON THE (E) TRAFFIC SIGNAL SYSTEMS SHALL BE BAGGED OR COVERED.
8. ALL (E) ROAD SIGNS, PAVEMENT MARKINGS AND/OR PLOWABLE PAVEMENT REFLECTORS WHICH CONFLICT WITH THE (N) TRAFFIC CONTROL PLAN SHALL BE COVERED, REMOVED, OR RELOCATED. ALL TRAFFIC CONTROL DEVICES SHALL BE RESTORED TO MATCH PRE–CONSTRUCTION CONDITION AFTER COMPLETION OF WORK.
9. CONTRACTOR SHALL CONTACT LOCAL AUTHORITY HAVING HIGHWAY JURISDICTION AND PROVIDE ADDITIONAL "FLAGMEN" OR POLICE SUPERVISION, IF REQUIRED.
10. ALL EXCAVATED AREAS WITHIN OR ADJACENT TO THE ROADWAY SHALL BE BACKFILLED AND PLACED ON A MINIMUM 6H:1V SLOPE PRIOR TO END OF EACH WORK DAY. OTHER EXCAVATED AREAS WITHIN THE CLEAR ZONE ARE TO BE EITHER BACKFILLED OR PRECAST CONCRETE CURB BARRIER CONSTRUCTION BARRIER SET TEMPORARILY IN PLACE TO SHIELD VEHICULAR AND PEDESTRIAN TRAFFIC.
11. WHERE DICTATED BY LOCAL CONDITIONS, THE CONTRACTOR SHALL MAKE PROVISIONS FOR MAINTAINING PEDESTRIAN AND WORKER CROSSING LOCATIONS IN ACCORDANCE WITH ALL APPLICABLE CODES AND OSHA REQUIREMENTS.
12. CONSTRUCTION ZONE SPEED LIMIT IF REDUCED FROM POSTED LIMITS SHALL BE IN ACCORDANCE WITH MUTCD AND WILL BE DETERMINED BY THE AUTHORITY HAVING JURISDICTION.
13. THERE SHALL BE NO WORKERS, EQUIPMENT, OR OTHER VEHICLES IN THE BUFFER SPACE OR THE ROLL AHEAD SPACE.
14. DRIVEWAYS AND/OR SIDE STREETS ENTERING THE ROADWAY AFTER THE FIRST ADVANCE WARNING SIGN SHALL BE PROVIDED WITH AT LEAST ONE W20–1 SIGN (ROAD WORK AHEAD) AS A MINIMUM.
15. CONES MAY BE SUBSTITUTED FOR DRUMS AND INSTALLED UPON THE APPROVAL OF THE AUTHORITY HAVING JURISDICTION PROVIDED THEY COMPLY WITH MUTCD.
16. THE SPACING BETWEEN CONES, TUBULAR MARKERS, VERTICAL PANELS, DRUMS, AND BARRICADES SHOULD NOT EXCEED A DISTANCE IN FEET EQUAL TO 1.0 TIMES THE SPEED LIMIT IN MPH WHEN USED FOR TAPER CHANNELIZATION, AND A DISTANCE IN FEET EQUAL TO 2.0 TIMES THE SPEED LIMIT IN MPH WHEN USED FOR TANGENT CHANNELIZATION.
17. WHEN CHANNELIZATION DEVICES HAVE THE POTENTIAL OF LEADING VEHICULAR TRAFFIC OUT OF THE INTENDED VEHICULAR TRAFFIC SPACE, THE CHANNELIZATION DEVICES SHOULD BE EXTENDED A DISTANCE IN FEET OF 2.0 TIMES THE SPEED LIMIT IN MPH BEYOND THE DOWNSTREAM END OF THE TRANSITION AREA.
18. TAPER LENGTHS ARE CALCULATED AS FOLLOWS:
L= $WS^2/60$ (40 MPH AND HIGHER) OR L2= WS (OVER 40 MPH),
WHERE W= OFFSET WIDTH (FT), S= TRAFFIC SPEED (MPH).

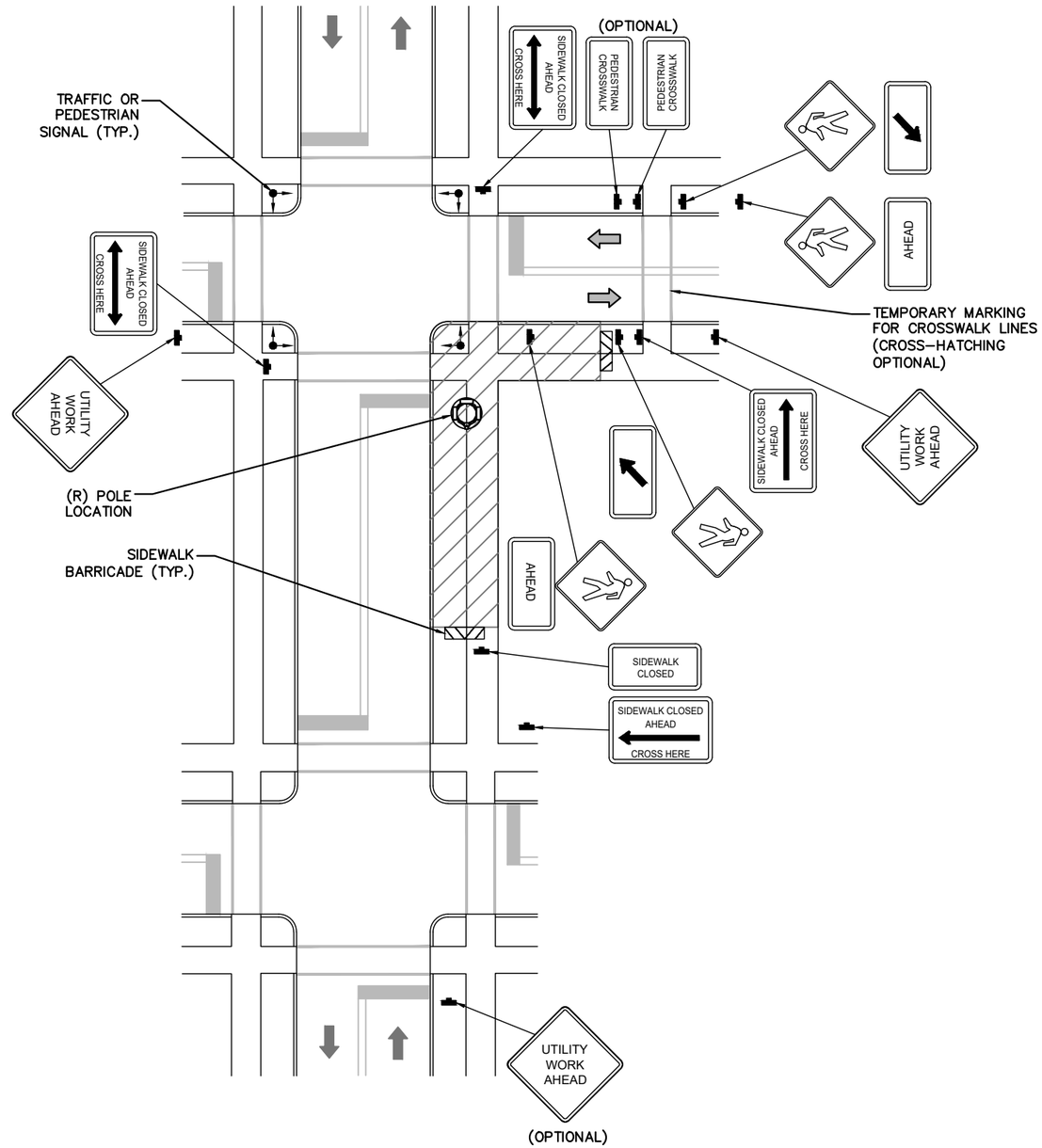

TYPICAL PEDESTRIAN / WORKER SAFETY PLAN

SCALE: NOT TO SCALE

1

mobilitie

PROJECT NO:	9FLB000962F
DRAWN BY:	RC
CHECKED BY:	SJB

D	01–09–18	REVISION
C	11–28–17	REVISION
B	10–15–17	REVISION
A	09–03–17	FOR CLIENT REVIEW

KMB DESIGN GROUP, LLC

Stephen A. Bray

PROFESSIONAL ENGINEER

STEPHEN A. BRAY LICENSE No.68902 STATE OF FLORIDA PROFESSIONAL ENGINEER

FL LICENSE No.68902 1/9/18

IT IS A VIOLATION OF THE LAW FOR ANY PERSON, UNLESS THEY ARE ACTING UNDER THE DIRECTION OF A LICENSED PROFESSIONAL ENGINEER, TO ALTER THIS DOCUMENT

MI90XS507F
MIAMI BEACH, FL 33141 ' 24'-6"
STEEL POLE

SHEET TITLE
PEDESTRIAN TRAFFIC CONTROL PLAN

SHEET NUMBER
TC-2

GENERAL CONSTRUCTION NOTES:

1. ALL WORK SHALL CONFORM TO THE REQUIREMENTS OF THE LOCAL BUILDING CODE, THE LATEST ADOPTED EDITION AND ALL OTHER APPLICABLE CODES AND ORDINANCES.

2. CONTRACTOR SHALL CONSTRUCT SITE IN ACCORDANCE WITH THESE DRAWINGS AND LATEST MOBILITIE CONSTRUCTION STANDARDS. THE SPECIFICATION IS THE RULING DOCUMENT AND ANY DISCREPANCIES BETWEEN THE SPECIFICATION AND THE CONSTRUCTION DRAWINGS SHALL BE BROUGHT TO THE ATTENTION OF THE ARCHITECT/ENGINEER OR MOBILITIE CM PRIOR TO THE COMMENCEMENT OF WORK.

3. CONTRACTOR SHALL VISIT THE JOB SITE AND SHALL FAMILIARIZE THEMSELVES WITH ALL CONDITIONS AFFECTING THE (N) WORK AND SHALL MAKE PROVISIONS AS TO THE COST THEREOF. CONTRACTOR SHALL BE RESPONSIBLE FOR FAMILIARIZING THEMSELVES WITH ALL CONTRACT DOCUMENTS, FIELD CONDITIONS AND DIMENSIONS AND CONFIRMING THAT THE WORK MAY BE ACCOMPLISHED, AS SHOWN, PRIOR TO PROCEEDING WITH CONSTRUCTION. ANY DISCREPANCIES SHALL BE BROUGHT TO THE ATTENTION OF THE ARCHITECT/ENGINEER OR MOBILITIE CM PRIOR TO THE COMMENCEMENT OF WORK. NO COMPENSATION WILL BE AWARDED BASED ON CLAIM OF LACK OF KNOWLEDGE OF FIELD CONDITIONS.

4. IT IS NOT THE INTENT OF THESE PLANS TO SHOW EVERY MINOR DETAIL OF CONSTRUCTION. CONTRACTOR IS REQUIRED TO FURNISH AND INSTALL ANY/ALL ITEMS FOR A COMPLETE AND FULLY FUNCTIONAL SYSTEM SUBJECT ONLY TO OWNER-SUPPLIED ITEMS. CONTRACTOR SHALL PROVIDE ANY/ALL REQUIREMENTS FOR THE EQUIPMENT TO BE PLACED IN PROPER WORKING ORDER.

5. PLANS ARE NOT TO BE SCALED. THESE PLANS ARE INTENDED TO BE A DIAGRAMMATIC OUTLINE ONLY UNLESS OTHERWISE NOTED. THE WORK SHALL INCLUDE FURNISHING MATERIALS, EQUIPMENT AND APPURTENANCES, AND LABOR NECESSARY TO EFFECT ALL INSTALLATIONS AS INDICATED ON THE DRAWINGS. OWNER PROVIDED AND CONTRACTOR INSTALLED MATERIALS WILL INCLUDE THE FOLLOWING, UNLESS NOTED OTHERWISE:

   A) TRANSMITTER
   B) UHF ANTENNA AND MOUNTING BRACKETS, GPS UNIT AND KU BACKHAUL
   C) UHF COAX AND HANGERS
   D) INTEGRATED LOAD CENTER

6. DIMENSIONS SHOWN ARE TO FINISH SURFACES UNLESS OTHERWISE NOTED. SPACING BETWEEN EQUIPMENT IS REQUIRED CLEARANCE. THEREFORE, IT IS CRITICAL TO FIELD VERIFY DIMENSIONS. SHOULD THERE BE ANY QUESTIONS REGARDING THE CONTRACT DOCUMENTS, (E) CONDITIONS AND/OR DESIGN INTENT, THE CONTRACTOR SHALL BE RESPONSIBLE FOR REPORTING ANY DISCREPANCIES TO THE ATTENTION OF THE MOBILITIE CM, IN WRITING, PRIOR TO THE COMMENCEMENT OF WORK.

7. DETAILS PROVIDED ARE FOR THE PURPOSE OF SHOWING DESIGN INTENT. MODIFICATIONS MAY BE REQUIRED TO SUIT JOB DIMENSIONS OR SITE CONDITIONS, AND SUCH MODIFICATIONS SHALL BE INCLUDED AS PART OF THE WORK.

8. CONTRACTOR SHALL PAY FOR APPLICABLE PERMITS, FEES, INSPECTIONS AND TESTING. CONTRACTOR IS TO OBTAIN PERMIS AND APPROVED SUBMITTALS PRIOR TO ORDERING MATERIALS AND THE COMMENCEMENT OF WORK.

9. THE TERM "PROVIDE" USED IN CONSTRUCTION DOCUMENTS AND SPECIFIATIONS, INDICATES THAT THE CONTRACTOR SHALL FURNISH AND INSTALL.

10. CONTRACTOR SHALL RECEIVE CLARIFICATION IN WRITING, AND SHALL RECEIVE IN WRITING AUTHORIZATION TO PROCEED BEFORE STARTING WORK ON ANY ITEMS NOT CLEARLY DEFINED OR IDENTIFIED BY THE CONTRACT DOCUMENTS.

11. CONTRACTOR SHALL SUPERVISE AND DIRECT THE WORK USING ACCEPTED INDUSTRY-STANDARD SKILLS AND ATTENTION. CONTRACTOR SHALL BE SOLELY RESPONSIBLE FOR CONSTRUCTION MEANS, METHODS, TECHNIQUES, SEQUENCES AND PROCEDURES AND FOR COORDINATING ALL PORTIONS OF THE WORK UNDER CONTRACT, UNLESS OTHERWISE NOTED.

12. CONTRACTOR SHALL BE RESPONSIBLE FOR THE SAFETY OF THE WORK AREA, ADJACENT AREAS AND BUILDING OCCUPANTS THAT ARE LIKELY TO BE AFFECTED BY THE WORK UNDER THIS CONTRACT. WORK SHALL CONFORM TO ALL OSHA REQUIREMENTS.

13. CONTRACTOR SHALL COORDINATE THEIR WORK WITH THE MOBILITIE CM AND SCHEDULE THEIR ACTIVITIES AND WORKING HOURS IN ACCORDANCE WITH THE REQUIREMENTS.

14. CONTRACTOR SHALL BE RESPONSIBLE FOR COORDINATING THEIR WORK WITH THE WORK OF OTHERS AS IT MAY RELATE TO RADIO EQUIPMENT, ANTENNAS AND ANY OTHER PORTIONS OF THE WORK.

15. CONTRACTOR SHALL INSTALL ALL EQUIPMENT AND MATERIALS IN ACCORDANCE WITH MANUFACTURERS RECOMMENDATIONS UNLESS SPECIFICALLY OTHERWISE INDICATED OR WHERE LOCAL CODES OR REGULATIONS TAKE PRECEDENCE.

16. CONTRACTOR SHALL MAKE NECESSARY PROVISIONS TO PROTECT (E) SURFACES, EQUIPMENT, IMPROVEMENTS, PIPING ETC. AND IMMEDIATE REPAIR, TO NEW CONDITION, ANY DAMAGE THAT OCCURS DURING CONSTRUCTION AT THE SOLE COST OF THE CONTRACTOR.

17. IN DRILLING HOLES, OR CORING, INTO CONCRETE WHETHER FOR FASTENING OR ANCHORING PURPOSES, OR PENETRATIONS THROUGH THE FLOOR FOR CONDUIT RUNS, PIPE RUNS, ETC., MUST BE CLEARLY UNDERSTOOD THAT REINFORCING STEEL SHALL NOT BE DRILLED INTO, CUT OR DAMAGED UNDER ANY CIRCUMSTANCES (UNLESS NOTED OTHERWISE). LOCATIONS OF REINFORCING STEEL ARE NOT DEFINITELY KNOWN AND THEREFORE MUST BE LOCATED BY THE CONTRACTOR USING APPROPRIATE METHODS AND EQUIPMENT PRIOR TO ANY DRILLING OR CORING OPERATIONS IN (E) CONCRETE.

18. CONTRACTOR SHALL REPAIR, TO NEW CONDITION, ALL (E) WALL SURFACES DAMAGED DURING CONSTRUCTION SUCH THAT THEY MATCH AND BLEND IN WITH ADJACENT SURFACES.

19. CONTRACTOR SHALL SEAL PENETRATIONS THROUGH FIRE RATED ASSEMBLIES OR MATERIALS WITH U.L. LISTED AND FIRE CODE APPROVED MATERIALS AND SYSTEMS THAT MEET OR EXCEED THE RATING OF THE ASSEMBLY IN WHICH THE NEW PENETRATION IS PLACED.

20. CONTRACTOR SHALL KEEP CONTRACT AREA CLEAN, HAZARD FREE, AND DISPOSE OF ALL DIRT, DEBRIS, AND RUBBISH. EQUIPMENT NOT SPECIFIED AS REMAINING ON THE PROPERTY OF THE OWNER SHALL BE REMOVED. LEAVE PREMISES IN CLEAN CONDITION AND FREE FROM PAINT SPOTS, DUST, OR SMUDGES OF ANY NATURE. CONTRACTOR SHALL BE RESPONSIBLE FOR MAINTAINING ALL ITEMS UNTIL COMPLETION OF CONSTRUCTION.

21. MINIMUM BEND RADIUS OF ANTENNA CABLES SHALL BE IN ACCORDANCE WITH CABLE MANUFACTURERS RECOMMENDATIONS.

22. CONTRACTOR SHALL MINIMIZE DISTURBANCE TO (E) SITE DURING CONSTRUCTION. EROSION CONTROL MEASURES, IF REQUIRED DURING CONSTRUCTION SHALL BE IN CONFORMANCE WITH JURISDICTIONAL OR STATE AND LOCAL GUIDELINES FOR EROSION AND SEDIMENT CONTROL AND COORDINATED WITH LOCAL REGULATORY AUTHORITIES. CONTRACTOR SHALL BE RESPONSIBLE FOR MAINTENANCE OF ANY EROSION CONTROL MEASURES, RECORD-KEEPING, MONITORING, AND REPORTING TO THE OWNER AND REGULATORY AUTHORITIES.

23. ALL CONSTRUCTION WORK IS TO ADHERE TO APPLICANT'S INTEGRATED CONSTRUCTION STANDARDS UNLESS STATE OR LOCAL CODE IS MORE STRINGENT.

24. THE INTENT OF THE PLANS AND SPECIFICATIONS IS TO PERFORM THE CONSTRUCTION IN ACCORDANCE PER STATE BUILDING STANDARDS CODE AND STATE CODE OF REGULATIONS. SHOULD ANY CONDITIONS DEVELOP NOT COVERED BY THE APPROVED PLANS AND SPECIFICATIONS WHEREIN THE FINISHED WORK WILL NOT COMPLY PER STATE CODE OF REGULATIONS, A SCOPE OF WORK DETAILING AND SPECIFYING THE REQUIRED WORK SHALL BE SUBMITTED TO AND APPROVED BY THE JURISDICTION BEFORE PROCEEDING WITH THE WORK. A CHANGE ORDER FOR THAT SCOPE SHALL BE SUBMITTED TO THE MOBILITIE CM PRIOR TO PROCEEDING WITH THE WORK.

25. ADEQUATE AND REQUIRED LIABILITY INSURANCE SHALL BE PROVIDED BY THE CONTRACTOR FOR PROTECTION AGAINST PUBLIC LOSS AND ANY/ALL PROPERTY DAMAGE FOR THE DURATION OF WORK.

26. CONTRACTOR SHALL GUARANTEE ANY/ALL MATERIALS AND WORK FREE FROM DEFECTS FOR A PERIOD OF NOT LESS THAN ONE YEAR FROM DATE OF ACCEPTANCE. ANY CORRECTIVE WORK SHALL BE COMPLETED AT THE SOLE COST OF THE CONTRACTOR.

ELECTRICAL NOTES:

1. ELECTRICAL CONTRACTOR SHALL SUPPLY AND INSTALL ANY/ALL ELECTRICAL WORK INDICATED. ANY/ALL CONSTRUCTION SHALL BE IN ACCORDANCE W/DRAWINGS AND ANY/ALL APPLICABLE SPECIFICATIONS. IF ANY PROBLEMS ARE ENCOUNTERED BY COMPLYING WITH THESE REQUIREMENTS, CONTRACTOR SHALL NOTIFY MOBILITIE CM AS SOON AS POSSIBLE, AFTER THE DISCOVERY OF THE PROBLEMS, AND SHALL NOT PROCEED WITH THAT PORTION OF WORK, UNTIL THE MOBILITIE CM HAS DIRECTED THE CORRECTIVE ACTIONS TO BE TAKEN.

2. ELECTRICAL CONTRACTOR SHALL VISIT THE JOB SITE AND FAMILIARIZE THEMSELF WITH ANY/ALL CONDITIONS AFFECTING ELECTRICAL AND COMMUNICATION INSTALLATION AND MAKE PROVISIONS AS TO THE COST THEREOF. ALL (E) CONDITIONS OF ELECTRICAL EQUIP., ETC., THAT ARE PART OF THE FINAL SYSTEM, SHALL BE VERIFIED BY THE CONTRACTOR, PRIOR TO THE SUBMITTING OF THEIR BID. FAILURE TO COMPLY WITH THIS PARAGRAPH WILL IN NO WAY RELIEVE CONTRACTOR OF PERFORMING ALL WORK NECESSARY FOR A COMPLETE AND WORKING SYSTEM.

3. ALL WORK SHALL BE PERFORMED IN ACCORDANCE WITH THE LATEST EDITION OF THE NEC, ALL CODES AND ORDINANCES OF THE LOCAL JURISDICTION, AND POWER & TELEPHONE COMPANIES HAVING JURISDICTION AND SHALL INCLUDE BUT ARE NOT BE LIMITED TO:

   A) UL – UNDERWRITERS LABORATORIES
   B) NEC – NATIONAL ELECTRICAL CODE
   C) NEMA – NATIONAL ELECTRICAL MANUFACTURERS ASSOC.
   D) OSHA – OCCUPATIONAL SAFETY AND HEALTH ACT
   E) SBC – STANDARD BUILDING CODE
   F) NFPA – NATIONAL FIRE PROTECTION AGENCY
   G) ANSI – AMERICAN NATIONAL STANDARDS INSTITUTE
   H) IEEE – INSTITUTE OF ELECTRICAL AND ELECTRONICS ENGINEERS
   I) ASTM – AMERICAN SOCIETY FOR TESTING MATERIALS

4. REFER TO SITE PLANS AND ELEVATIONS FOR EXACT LOCATIONS OF ALL EQUIPMENT, AND CONFIRM WITH MOBILITIE CM ANY SIZES AND LOCATIONS WHEN NEEDED.

5. (E) SERVICES: CONTRACTOR SHALL NOT INTERRUPT (E) SERVICES WITHOUT WRITTEN PERMISSION OF THE OWNER.

6. CONTRACTOR SHALL CONFIRM WITH LOCAL UTILITY COMPANY ANY/ALL REQUIREMENTS SUCH AS THE: LUG SIZE RESTRICTIONS, CONDUIT ENTRY, SIZE OF TRANSFORMERS, SCHEDULED DOWNTIME FOR THE OWNERS' CONFIRMATION, ETC... ANY/ALL CONFLICTS SHALL BE BROUGHT TO THE ATTENTION OF THE MOBILITIE CM, PRIOR TO BEGINNING ANY WORK.

7. MINIMUM WIRE SIZE SHALL BE #12 AWG, NOT INCLUDING CONTROL WIRING, UNLESS NOTED OTHERWISE. ALL CONDUCTORS SHALL BE COPPER WITH THWN INSULATION, UNLESS OTHERWISE NOTED.

8. OUTLET BOXES SHALL BE PRESSED STEEL IN DRY LOCATIONS, CAST ALLOY WITH THREADED HUBS IN WET/DAMP LOCATIONS AND SPECIAL ENCLOSURES FOR OTHER CLASSIFIED AREAS.

9. IT IS NOT THE INTENT OF THESE PLANS TO SHOW EVERY MINOR DETAIL OF THE CONSTRUCTION. CONTRACTOR IS EXPECTED TO FURNISH AND INSTALL ALL ITEMS FOR A COMPLETE ELECTRICAL SYSTEM AND PROVIDE ALL REQUIREMENTS FOR THE EQUIPMENT TO BE PLACED IN PROPER WORKING ORDER.

10. ELECTRICAL SYSTEM SHALL BE AS COMPLETELY AND EFFECTIVELY GROUNDED, AS REQUIRED BY SPECIFICATIONS, SET FORTH BY APPLICANT.

11. ALL WORK SHALL BE PERFORMED BY A LICENSED ELECTRICAL CONTRACTOR IN A FIRST CLASS, WORKMANLIKE MANNER. THE COMPLETED SYSTEM SHALL BE FULLY FUNCTIONAL AND SHALL BE APPROVED BY THE MOBILITIE CM AND LOCAL JURISDICTION. ANY DIFICIENCIES SHALL BE CORRECTED BY AN ELECTRICAL CONTRACTOR AT THE SOLE COST OF THE CONTRACTOR.

12. ALL WORK SHALL BE COORDINATED WITH OTHER TRADES TO AVOID INTERFERENCE WITH THE PROGRESS OF CONSTRUCTION.

mobilitie

PROJECT NO:	9FLB000962F
DRAWN BY:	RC
CHECKED BY:	SJB

D	01-09-18	REVISION
C	11-28-17	REVISION
B	10-15-17	REVISION
A	09-03-17	FOR CLIENT REVIEW

KMB DESIGN GROUP, LLC

Stephen A. Bray

PROFESSIONAL ENGINEER

STEPHEN A. BRAY
LICENSE
No.68902
STATE OF
FLORIDA
PROFESSIONAL ENGINEER

FL LICENSE 68902 1/9/18

IT IS A VIOLATION OF THE LAW FOR ANY PERSON, UNLESS THEY ARE ACTING UNDER THE DIRECTION OF A LICENSED PROFESSIONAL ENGINEER, TO ALTER THIS DOCUMENT

MI90XS507F
MIAMI BEACH, FL 33141 ' 24'-6"
STEEL POLE

SHEET TITLE
GENERAL NOTES

SHEET NUMBER
GN-1

ELECTRICAL NOTES CONT'D

1. THE CORRECTION OF ANY DEFECTS SHALL BE COMPLETED BY THE CONTRACTOR WITHOUT ANY ADDITIONAL CHARGE AND SHALL INCLUDE THE REPLACEMENT OR THE REPAIR OF ANY OTHER PHASE OF THE INSTALLATION, WHICH MAY HAVE BEEN DAMAGED THEREIN.

2. CONTRACTOR SHALL PROVIDE AND INSTALL CONDUIT, CONDUCTORS, PULL WIRES, BOXES, COVER PLATES AND DEVICES FOR ALL OUTLETS AS INDICATED.

3. DITCHING AND BACK FILL: CONTRACTOR SHALL PROVIDE FOR ALL UNDERGROUND INSTALLED CONDUIT AND/OR CABLES INCLUDING EXCAVATION AND BACKFILLING AND COMPACTION. REFER TO NOTES AND REQUIREMENTS 'EXCAVATION, AND BACKFILLING.

4. MATERIALS, PRODUCTS AND EQUIPMENT, INCLUDING ALL COMPONENTS THEREOF, SHALL BE NEW AND SHALL APPEAR ON THE LIST OF U.L. APPROVED ITEMS AND SHALL MEET OR EXCEED THE REQUIREMENTS OF THE NEC, NEMA AND IECE.

5. CONTRACTOR SHALL SUBMIT SHOP DRAWINGS OR MANUFACTURER'S CATALOG INFORMATION OF ANY/ALL EQUIPMENT AND ALL OTHER ELECTRICAL ITEMS FOR APPROVAL BY THE MOBILITIE CM PRIOR TO INSTALLATION.

6. ANY CUTTING OR PATCHING DEEMED NECESSARY FOR ELECTRICAL WORK IS THE ELECTRICAL CONTRACTORS RESPONSIBILITY AND SHALL BE INCLUDED IN THE COST FOR WORK AND PERFORMED TO THE SATISFACTION OF THE MOBILITIE CM UPON FINAL ACCEPTANCE.

7. THE ELECTRICAL CONTRACTOR SHALL LABEL ALL PANELS WITH ONLY TYPEWRITTEN DIRECTORIES. ALL ELECTRICAL WIRING SHALL BE THE RESPONSIBILITY OF THE ELECTRICAL CONTRACTOR.

8. DISCONNECT SWITCHES SHALL BE UL–RATED, H.P. RATED HEAVY–DUTY, QUICK–MAKE AND QUICK–BREAK ENCLOSURES, AS REQUIRED BY EXPOSURE TYPE.

9. ALL CONNECTIONS SHALL BE MADE WITH A PROTECTIVE COATING OF AN ANTI–OXIDE COMPOUND KNOWN AS "NO–OXIDE A" BY DEARBORNE CHEMICAL CO. COAT ALL WIRE SURFACES BEFORE CONNECTING. EXPOSED COPPER SURFACES, INCLUDING GROUND BARS, SHALL BE TREATED – NO SUBSTITUTIONS.

10. RACEWAYS: CONDUIT SHALL BE SCHEDULE 80 PVC MEETING OR EXCEEDING NEMA TC2 – 1990. CONTRACTOR SHALL PLUG AND CAP EACH END OF SPARE AND EMPTY CONDUITS AND PROVIDE TWO SEPARATE PULL STRINGS – 200 LBS TEST POLYETHYLENE CORD. ALL CONDUIT BENDS SHALL BE A MINIMUM OF 2 FT. RADIUS. RGS CONDUITS WHEN SPECIFIED, SHALL MEET UL–6 FOR GALVANIZED STEEL. ALL FITTINGS SHALL BE SUITABLE FOR USE WITH THREADED RIGID CONDUIT. COAT ALL THREADS WITH 'BRITE ZINC' OR 'COLD GALV'.

11. SUPPORT OF ALL ELECTRICAL WORK SHALL BE AS REQUIRED BY NEC.

12. CONDUCTORS: CONTRACTOR SHALL USE 98% CONDUCTIVITY COPPER WITH TYPE THWN INSULATION, UNLESS OTHERWISE NOTED, 600 VOLT, COLOR CODED. USE SOLID CONDUCTORS FOR WIRE UP TO AND INCLUDING NO. 8 AWG. USE STRANDED CONDUCTORS FOR WIRE ABOVE NO. 8 AWG.

13. CONNECTORS FOR POWER CONDUCTORS: CONTRACTOR SHALL USE PRESSURE TYPE INSULATED TWIST–ON CONNECTORS FOR NO. 10 AWG AND SMALLER. USE SOLDERLESS MECHANICAL TERMINAL LUGS FOR NO. 8 AWG AND LARGER.

14. SERVICE: AS SPECIFIED ON THE DRAWINGS. OWNER OR OWNER'S AGENT WILL APPLY FOR POWER. ALL PROVISIONS FOR TEMPORARY POWER WILL BE OBTAINED BY THE CONTRACTOR.

15. TELEPHONE OR FIBER SERVICE: CONTRACTOR SHALL PROVIDE EMPTY CONDUITS WITH PULL STRINGS AS INDICATED ON DRAWINGS.

16. ELECTRICAL AND TELCO/FIBER RACEWAYS TO BE BURIED A MINIMUM DEPTH OF 30", UNLESS OTHERWISE NOTED.

17. CONTRACTOR SHALL PLACE 6" WIDE DETECTABLE WARNING TAPE AT A DEPTH OF 6" BELOW GROUND AND DIRECTLY ABOVE ELECTRICAL AND TELCO SERVICE CONDUITS. CAUTIONS TAPE TO READ "CAUTION BURIED ELECTRIC" OR "BURIED TELECOM".

18. ALL BOLTS SHALL BE 3–16 STAINLESS STEEL

GROUNDING NOTES:

1. ALL HARDWARE SHALL BE 3–16 STAINLESS STEEL, INCLUDING LOCK WASHERS. COAT ALL SURFACES WITH AN ANTI–OXIDANT COMPOUND, AS SPECIFIED, BEFORE MATING. ALL HARDWARE SHALL BE STAINLESS STEEL 3/8 INCH DIAMETER OR SIZED TO MATCH COMPONENTS OR LOG SIZE.

2. FOR GROUND BOND TO STEEL ONLY: INSERT A CADMIUM FLAT WASHER BETWEEN LUG AND STEEL, COAT ALL SURFACES WITH AN ANTI–OXIDANT COMPOUND BEFORE MATING.

3. ALL STEEL CONDUIT SHALL BE BONDED AT BOTH ENDS WITH GROUNDING BUSHING.

4. ALL ELECTRICAL AND GROUNDING AT THE POLE SITE SHALL COMPLY WITH THE NATIONAL ELECTRICAL CODE (NEC), NATIONAL FIRE PROTECTION ASSOCIATION (NFPA) 780 (LATEST EDITION), AND MANUFACTURER.

5. ALL DETAILS ARE SHOWN IN GENERAL TERMS. ACTUAL GROUNDING INSTALLATION AND CONSTRUCTION MAY VARY DUE TO SITE SPECIFIC CONDITIONS.

6. GROUND ALL ANTENNA BASES, FRAMES, CABLE RUNS, AND OTHER METALLIC COMPONENTS USING #6 GROUND WIRES. FOLLOW ANTENNA AND BTS MANUFACTURER'S PRACTICES FOR GROUNDING REQUIREMENTS.

7. ALL GROUND CONNECTIONS SHALL BE #6 AWG, UNLESS OTHERWISE NOTED. USE SOLID COPPER, BLACK JACKETED WIRE ON NON WOOD POLES AND SOLID TINNED COPPER, BARE (NO JACKET) WIRES ON WOOD POLES. BLACK WIRES WILL USE A SINGLE STRIPE OF GREEN ELECTRICAL TAPE WITHING 12" OF THE CONNECTION POINTS TO IDENTIFY AS GROUNDING WIRE.

8. NOTIFY ARCHITECT/ENGINEER IF THERE ARE ANY DIFFICULTIES INSTALLING GROUNDING SYSTEM DUE TO SITE SOIL CONDITIONS.

9. ALL HORIZONTALLY RUN GROUNDING CONDUCTORS SHALL BE INSTALLED A MINIMUM OF 30" BELOW GRADE/ 6' BELOW FROST–LINE IN TRENCH, UNLESS OTHERWISE NOTED. BACK FILL SHALL BE COMPACTED AS REQUIRED BY ARCHITECT/ENGINEER.

10. ALL GROUND CONDUCTORS SHALL BE RUN AS STRAIGHT AND SHORT AS POSSIBLE, WITH A MINIMUM 12" BENDING RADIUS NOT LESS THAN 90 DEGREES.

11. ACCEPTABLE CONNECTIONS FOR GROUNDING SYSTEM SHALL BE:

    A. BURNDY, HY–GRADE U.L. LISTED CONNECTORS FOR OUTDOOR USE OR AS APPROVED BY APPLICANT PROJECT MANAGER.
    B. CADWELD, EXOTHERMIC WELDS (WELDED CONNECTIONS).
    C. ONE (1) OR (2) HOLES TINNED COPPER COMPRESSION (LONG BARREL) FITTINGS.

12. ALL CRIMPED CONNECTIONS SHALL HAVE EMBOSSED MANUFACTURER'S DIEMARK VISIBLE AT THE CRIMP (RESULTING FROM USE OF PROPER CRIMPING DEVICES) AND WEATHER–PROOFED WITH HEAT SHRINK.

13. ALL CONNECTION HARDWARE SHALL BE TYPE 3–16 STAINLESS STEEL (NOT ATTRACTED TO MAGNETS).

14. ELECTRICAL SERVICE EQUIPMENT GROUNDING SHALL COMPLY WITH NEC, ARTICLE 250–82 AND SHALL BOND ALL (E) AND NEW GROUNDING ELECTRODES. NEW GROUNDING ELECTRODE SHALL INCLUDE BUT NOT LIMITED TO GROUND RODS.

TESTING AND EQUIPMENT TURN UP REQUIREMENTS:

1. RF CABLE, DATA CABLE, RADIO EQUIPMENT AND BACK HAUL EQUIPMENT TESTING WILL COMPLY WITH CURRENT INDUSTRY STANDARDS AND OR THOSE STANDARDS OF THE EQUIPMENT MANUFACTURER OR PROVIDED TO THE CONTRACTOR PRIOR TO TESTING.

2. CONTRACTOR WILL USE THE APPROPRIATE CALIBRATED TESTING EQUIPMENT IN THE TESTING OF RF CABLE, DATA CABLE, RADIO EQUIPMENT AND BACK HAUL EQUIPMENT THAT MEET INDUSTRY STANDARDS OF THE MANUFACTURER OR THOSE STANDARDS PROVIDED TO THE CONTRACTOR PRIOR TO TESTING.

3. CONTRACTOR TO VERIFY AND RECORD ALL TEST RESULTS AND PROVIDE THESE RESULTS WITHIN THE FINAL CLOSE OUT PACKAGE.

4. ALL PERSONNEL INVOLVED IN THE TESTING OF RF CABLE, DATA CABLE, RADIO EQUIPMENT AND BACK HAUL EQUIPMENT WILL BE REQUIRED TO HAVE BEEN TRAINED AND OR CERTIFIED IN THE PROPER TESTING OF RF CABLE, DATA CABLE, RADIO EQUIPMENT AND BACK HAUL EQUIPMENT.

5. ALL TEST RESULTS SHALL BE TIME STAMPED, RECORDED AND PRESENTED PRIOR TO ENERGIZING AND TURN UP OF ANY EQUIPMENT.

6. GPS EQUIPMENT (WHEN REQUIRED) IS NOT TO BE TESTED OR ATTACHED TO ANY CABLING DURING TESTING, DOING SO WILL DAMAGE THE GPS UNIT.

7. PRIOR TO TESTING IF THE CONTRACTOR HAS ANY QUESTIONS ABOUT THE TESTING PROCEDURES THEY ARE TO CALL AND OBTAIN ASSISTANCE FROM A QUALIFIED DESIGNATED TESTING REPRESENTATIVE.

8. EQUIPMENT IS NOT TO BE ENERGIZED UNTIL ALL TESTING HAS BEEN COMPLETED, APPROVED AND THE APPROPRIATE AUTHORITY HAS BEEN NOTIFIED AND GIVES APPROVAL TO ENERGIZE THE EQUIPMENT.

SITE WORK NOTES:

1. DO NOT EXCAVATE OR DISTURB BEYOND THE PROPERTY LINES OR LEASE LINES, UNLESS OTHERWISE NOTED.

2. SIZE, LOCATION AND TYPE OF ANY UNDERGROUND UTILITIES OR IMPROVEMENTS SHALL BE ACCURATELY NOTED AND PLACED ON AS–BUILT DRAWINGS BY GENERAL CONTRACTOR AND ISSUED TO ARCHITECT/ENGINEER AT COMPLETION OF PROJECT.

3. ALL (E) UTILITIES, FACILITIES, CONDITIONS AND THEIR DIMENSIONS SHOWN ON PLANS HAVE. BEEN PLOTTED FROM AVAILABLE RECORDS. THE ENGINEER AND OWNER ASSUME NO RESPONSIBILITY WHATSOEVER AS TO THE SUFFICIENCY OR ACCURACY OF THE INFORMATION SHOWN ON THE PLANS OR THE MANNER OF THEIR REMOVAL OR ADJUSTMENT. CONTRACTOR SHALL BE RESPONSIBLE FOR DETERMINING EXACT LOCATION OF ALL (E) UTILITIES AND FACILITIES PRIOR TO START OF CONSTRUCTION. CONTRACTOR SHALL ALSO OBTAIN FROM EACH UTILITY COMPANY DETAILED INFORMATION RELATIVE TO WORKING SCHEDULES AND METHODS OF REMOVING OR ADJUSTING (E) UTILITIES.

4. CONTRACTOR SHALL VERIFY ALL (E) UTILITIES BOTH HORIZONTALLY AND VERTICALLY PRIOR TO START OF CONSTRUCTION. ANY DISCREPANCIES OR DOUBTS AS TO THE INTERPRETATION OF PLANS SHALL BE IMMEDIATELY REPORTED TO THE ARCHITECT/ENGINEER OR MOBILITIE CM FOR RESOLUTION AND INSTRUCTION, AND NO FURTHER WORK SHALL BE PERFORMED UNTIL THE DISCREPANCY IS CHECKED AND CORRECTED BY THE ARCHITECT/ENGINEER. FAILURE TO SECURE SUCH INSTRUCTION MEANS CONTRACTOR WILL HAVE WORKED AT THEIR OWN RISK AND EXPENSE. CONTRACTOR SHALL CALL LOCAL UTILITY LOCATE HOT LINE, SUCH AS 811, FOR UTILITY LOCATIONS A MINIMUM OF 48 HOURS PRIOR TO START OF CONSTRUCTION.

5. ALL NEW AND (E) UTILITY STRUCTURES ON SITE AND IN AREAS TO BE DISTURBED BY CONSTRUCTION SHALL BE ADJUSTED TO FINISH ELEVATIONS PRIOR TO FINAL INSPECTION OF WORK. ANY COST RELATED TO ADJUSTING (E) STRUCTURES SHALL BE BORNE SOLELY BY THE CONTRACTOR.

6. GRADING OF THE SITE WORK AREA IS TO BE SMOOTH AND CONTINUOUS IN SLOPE AND IS TO FEATHER INTO (E) GRADES AT THE GRADING LIMITS.

7. ALL TEMPORARY EXCAVATIONS FOR THE INSTALLATION OF FOUNDATIONS, UTILITIES, ETC., SHALL BE PROPERLY LAID BACK OR BRACED IN ACCORDANCE WITH CORRECT OCCUPATIONAL SAFETY AND HEALTH ADMINISTRATION (OSHA) REQUIREMENTS.

mobilitie

PROJECT NO:	9FLB000962F
DRAWN BY:	RC
CHECKED BY:	SJB

D	01–09–18	REVISION
C	11–28–17	REVISION
B	10–15–17	REVISION
A	09–03–17	FOR CLIENT REVIEW

KMB DESIGN GROUP, LLC
Stephen A. Bray
PROFESSIONAL ENGINEER
STEPHEN A. BRAY
LICENSE
No.68902
STATE OF
FLORIDA
PROFESSIONAL ENGINEER
FL LICENSE No.68902 1/9/18

IT IS A VIOLATION OF THE LAW FOR ANY PERSON, UNLESS THEY ARE ACTING UNDER THE DIRECTION OF A LICENSED PROFESSIONAL ENGINEER, TO ALTER THIS DOCUMENT

MI90XS507F
MIAMI BEACH, FL 33141 ' 24'-6"
STEEL POLE

SHEET TITLE
GENERAL NOTES

SHEET NUMBER
GN-2

SITE WORK NOTES CONT'D

8. STRUCTURAL FILLS SUPPORTING PAVEMENTS SHALL BE COMPACTED TO 95% OF MAXIMUM STANDARD PROCTOR DRY DENSITY, UNLESS OTHERWISE NOTED.

9. NEW GRADES NOT IN BUILDING AND DRIVEWAY IMPROVEMENT AREA TO BE ACHIEVED BY FILLING WITH APPROVED CLEAN FILL AND COMPACTED TO 95% OF STANDARD PROCTOR DENSITY.

10. ALL FILL SHALL BE PLACED IN UNIFORM LIFTS. THE LIFTS THICKNESS SHOULD NOT EXCEED THAT WHICH CAN BE PROPERLY COMPACTED THROUGHOUT ITS ENTIRE DEPTH WITH THE EQUIPMENT AVAILABLE.

11. ANY FILLS PLACED ON (E) SLOPES THAT ARE STEEPER THAN 10 HORIZONTAL TO 1 VERTICAL SHALL BE PROPERLY BENCHED INTO THE (E) SLOPE AS DIRECTED BY A GEOTECHNICAL ENGINEER.

12. CONTRACTOR SHALL CLEAN ENTIRE SITE AFTER CONSTRUCTION SUCH THAT NO DEBRIS, PAPER, TRASH, WEEDS, BRUSH, EXCESS FILL, OR ANY OTHER DEPOSITS WILL REMAIN. ALL MATERIALS COLLECTED DURING CLEANING OPERATIONS SHALL BE DISPOSED OF OFF-SITE BY THE GENERAL CONTRACTOR.

13. ALL TREES AND SHRUBS WHICH ARE NOT IN DIRECT CONFLICT WITH THE IMPROVEMENTS SHALL BE PROTECTED BY THE GENERAL CONTRACTOR.

14. ALL SITE WORK SHALL BE CAREFULLY COORDINATED BY GENERAL CONTRACTOR WITH LOCAL UTILITY COMPANY, TELEPHONE COMPANY, AND ANY OTHER UTILITY COMPANIES HAVING JURISDICTION OVER THIS LOCATION.

ENVIRONMENTAL NOTES:

1. ALL WORK PERFORMED SHALL BE DONE IN ACCORDANCE WITH ISSUED PERMITS. THE CONTRACTOR SHALL BE RESPONSIBLE FOR PAYMENT OF FINES AND PROPER CLEAN UP FOR AREAS IN VIOLATION.

2. CONTRACTOR SHALL BE RESPONSIBLE FOR CONSTRUCTION AND MAINTENANCE OF EROSION AND SEDIMENTATION CONTROLS DURING CONSTRUCTION FOR PROTECTION OF ADJACENT PROPERTIES, ROADWAYS AND WATERWAYS. ALL EROSION AND SEDIMENTATION CONTROLS SHALL BE MAINTAINED IN PLACE THROUGH FINAL JURISDICTIONAL INSPECTION & RELEASE OF SITE.

3. CONTRACTOR SHALL INSTALL/CONSTRUCT ALL NECESSARY SEDIMENT/SILT CONTROL FENCING AND PROTECTIVE MEASURES AS REQUIRED BY THE LOCAL JURISDICTION WITHIN THE LIMITS OF SITE DISTURBANCE PRIOR TO CONSTRUCTION.

4. NO SEDIMENT SHALL BE ALLOWED TO EXIT THE PROPERTY. THE CONTRACTOR IS RESPONSIBLE FOR TAKING ADEQUATE MEASURES FOR CONTROLLING EROSION. ADDITIONAL SEDIMENT CONTROL FENCING MAY BE REQUIRED IN ANY AREAS SUBJECT TO EROSION.

5. THE CONTRACTOR IS RESPONSIBLE FOR MAINTAINING POSITIVE DRAINAGE ON THE SITE AT ALL TIMES WITH SILT AND EROSION CONTROL MEASURES MAINTAINED ON THE DOWNSTREAM SIDE OF SITE DRAINAGE. ANY DAMAGE TO ADJACENT PROPERTY AS A RESULT OF EROSION WILL BE CORRECTED AT THE CONTRACTORS EXPENSE.

6. CONTRACTOR SHALL BE RESPONSIBLE FOR DAILY INSPECTIONS AND ANY REPAIRS OF ALL SEDIMENT CONTROL MEASURES INCLUDING SEDIMENT REMOVAL AS NECESSARY.

7. CLEARING OF VEGETATION AND TREE REMOVAL SHALL BE ONLY AS PERMITTED AND BE HELD TO A MINIMUM. ONLY TREES NECESSARY FOR CONSTRUCTION OF THE FACILITIES SHALL BE REMOVED.

8. SEEDING AND MULCHING AND/OR SODDING OF THE SITE WILL BE ACCOMPLISHED AS SOON AS POSSIBLE AFTER COMPLETION OF THE PROJECT FACILITIES AFFECTING LAND DISTURBANCE.

9. CONTRACTOR SHALL PROVIDE ALL EROSION AND SEDIMENTATION CONTROL MEASURES AS REQUIRED BY LOCAL, COUNTY AND STATE CODES AND ORDINANCES TO PROTECT EMBANKMENTS FROM SOIL LOSS AND TO PREVENT ACCUMULATION OF SOIL AND SILT IN STREAMS AND DRAINAGE PATHS LEAVING THE CONSTRUCTION AREA. THIS MAY INCLUDE, BUT IS NOT LIMITED TO SUCH MEASURES AS SILT FENCES, STRAW BALE SEDIMENT BARRIERS, AND CHECK DAMS.

10. RIP RAP OF SIZES INDICATED SHALL CONSIST OF CLEAN, HARD, SOUND, DURABLE, UNIFORM IN QUALITY STONE FREE OF ANY DETRIMENTAL QUANTITY OF SOFT, FRIABLE, THIN, ELONGATED OR LAMINATED PIECES, DISINTEGRATED MATERIAL, ORGANIC MATTER, OIL, ALKALI, OR OTHER DELETERIOUS SUBSTANCES.

11. GC TO PLACE FILTER MATERIAL AT ALL CATCH BASINS ADJACENT TO CONSTRUCTION SITE TO PREVENT SOLID WASTE CONTAMINATION FROM ENTERING SEWER SYSTEM

FOUNDATION, EXCAVATION AND BACKFILL NOTES:

1. ALL FINAL GRADED SLOPES SHALL BE A MAXIMUM OF 3 HORIZONTAL TO 1 VERTICAL, UNLESS OTHERWISE NOTED.

2. BACKFILL OF THE POLE SHALL BE PERFORMED BASED ON THE WATER TABLE. FLOWABLE FILL MIXTURES PURCHASED FROM CONCRETE PLANTS WILL BE USED INSTEAD OF FOAM IN WATER TABLE AREAS.
   - A: NORMAL SOILS ORDER OF PREFERENCE – FOAM, FLOWABLE FILL, CONCRETE, COMPACTED AGGREGATES
   - B: HIGH WATER TABLE SOILS ORDER OF PREFERENCES – FLOWABLE FILL, CONCRETE, COMPACTED AGGREGATES.

3. ALL EXCAVATIONS PREPARED FOR PLACEMENT OF CONCRETE SHALL BE OF UNDISTURBED SOILS, SUBSTANTIALLY HORIZONTAL AND FREE FROM ANY LOOSE, UNSUITABLE MATERIAL OR FROZEN SOILS, AND WITHOUT THE PRESENCE OF POUNDING WATER. DEWATERING FOR EXCESS GROUND WATER SHALL BE PROVIDED WHEN REQUIRED. COMPACTION OF SOILS UNDER CONCRETE PAD FOUNDATIONS SHALL NOT BE LESS THAN 95% OF THE MODIFIED PROCTOR MAXIMUM DRY DENSITY FOR THE SOIL IN ACCORDANCE WITH ASTM D1557.

4. CONCRETE FOUNDATIONS SHALL NOT BE PLACED ON ORGANIC OR UNSUITABLE MATERIAL. IF ADEQUATE BEARING CAPACITY IS NOT ACHIEVED AT THE DESIGNED EXCAVATION DEPTH, THE UNSATISFACTORY SOIL SHALL BE EXCAVATED TO ITS FULL DEPTH AND EITHER BE REPLACED WITH MECHANICALLY COMPACTED GRANULAR MATERIAL OR THE EXCAVATION SHALL BE FILLED WITH CONCRETE OF THE SAME TYPE SPECIFIED FOR THE FOUNDATION. CRUSHED LIME STONE #57 MAY BE USED TO STABILIZE THE BOTTOM OF THE EXCAVATION. ANY STONE SUB BASE MATERIAL, IF USED, SHALL NOT SUBSTITUTE FOR REQUIRED THICKNESS OF CONCRETE.

5. ALL EXCAVATIONS SHALL BE CLEAN OF UNSUITABLE MATERIAL SUCH AS VEGETATION, TRASH, DEBRIS, AND SO FORTH PRIOR TO BACK FILLING. BACK FILL SHALL CONSIST OF APPROVED MATERIALS SUCH AS EARTH, LOAM, SANDY CLAY, SAND AND GRAVEL, OR SOFT SHALE, FREE FROM CLODS OR LARGE STONES OVER 2 1/2" MAX DIMENSIONS. ALL BACK FILL SHALL BE PLACED IN COMPACTED LAYERS.

6. ALL FILL MATERIALS AND FOUNDATION BACK FILL SHALL BE PLACED IN MAXIMUM 6" THICK LIFTS BEFORE COMPACTION. EACH LIFT SHALL BE WETTED IF REQUIRED AND COMPACTED TO NOT LESS THAN 95% OF THE MODIFIED PROCTOR MAXIMUM DRY DENSITY FOR SOIL IN ACCORDANCE WITH ASTM D1557.

7. NEWLY PLACED CONCRETE FOUNDATIONS SHALL CURE A MINIMUM OF 72 HRS PRIOR TO BACK FILLING.

8. FINISHED GRADING SHALL BE SLOPED TO PROVIDE POSITIVE DRAINAGE AND PREVENT STANDING WATER. THE FINAL (FINISH) ELEVATION OF SLAB FOUNDATIONS SHALL SLOPE AWAY IN ALL DIRECTIONS FROM THE CENTER. FINISH GRADE OF CONCRETE PADS SHALL BE A MAXIMUM OF 4 INCHES ABOVE FINAL FINISH GRADE ELEVATIONS. PROVIDE SURFACE FILL GRAVEL TO ESTABLISH SPECIFIED ELEVATIONS WHERE REQUIRED.

9. NEWLY GRADED GRAVEL SURFACE AREAS TO RECEIVE GRAVEL SHALL BE COVERED WITH GEOTEXTILE FABRIC TYPE: TYPAR-3401 AS MANUFACTURED BY TYPAR GEOSYNTHETICS OR AN APPROVED EQUIVALENT, SHOWN ON PLANS. THE GEOTEXTILE FABRIC SHALL BE BLACK IN COLOR TO CONTROL THE RECURRENCE OF VEGETATIVE GROWTH AND EXTEND TO WITHIN 1 FOOT OUTSIDE THE SITE FENCING OR ELECTRICAL GROUNDING SYSTEM PERIMETER WHICH EVER IS GREATER. ALL FABRIC SHALL BE COVERED WITH A MINIMUM OF 4" DEEP COMPACTED STONE OR GRAVEL AS SPECIFIED. I.E. FDOT TYPE NO. 57 FOR FENCED COMPOUND; FDOT TYPE NO. 67 FOR ACCESS DRIVE AREA, UNLESS OTHERWISE NOTED.

10. IN ALL AREAS TO RECEIVE FILL: REMOVE ALL VEGETATION, TOPSOIL, DEBRIS, WET AND UNSATISFACTORY SOIL MATERIALS, OBSTRUCTIONS, AND DELETERIOUS MATERIALS FROM GROUND SURFACE. PLOW STRIP OR BREAK UP SLOPED SURFACES STEEPER THAN 1 VERTICAL TO 4 HORIZONTAL SUCH THAT FILL MATERIAL WILL BIND WITH (E)/PREPARED SOIL SURFACE.

11. WHEN SUB GRADE OR PREPARED GROUND SURFACE HAS A DENSITY LESS THAN THAT REQUIRED FOR THE FILL MATERIAL, SCARIFY THE GROUND SURFACE TO DEPTH REQUIRED, PULVERIZE, MOISTURE-CONDITION AND/OR AERATE THE SOILS AND RECOMPACT TO THE REQUIRED DENSITY PRIOR TO PLACEMENT OF FILLS.

12. IN AREAS WHICH (E) GRAVEL SURFACING IS REMOVED OR DISTURBED DURING CONSTRUCTION OPERATIONS, REPLACE GRAVEL SURFACING TO MATCH ADJACENT GRAVEL SURFACING AND RESTORED TO THE SAME THICKNESS AND COMPACTION AS SPECIFIED. ALL RESTORED GRAVEL SURFACING SHALL BE FREE FROM CORRUGATIONS AND WAVES.

13. (E) GRAVEL SURFACING MAY NOT BE REUSED.

14. GRAVEL SUB SURFACE SHALL BE PREPARED TO REQUIRED COMPACTION AND SUB GRADE ELEVATIONS BEFORE GRAVEL SURFACING IS PLACED AND/OR RESTORED. ANY LOOSE OR DISTURBED MATERIALS SHALL BE THOROUGHLY COMPACTED AND ANY DEPRESSIONS IN THE SUB GRADE SHALL BE FILLED AND COMPACTED WITH APPROVED SELECTED MATERIAL. GRAVEL SURFACING MATERIAL SHALL NOT BE USED FOR FILLING DEPRESSIONS IN THE SUB GRADE.

15. PROTECT (E) GRAVEL SURFACING AND SUB GRADE IN AREAS WHERE EQUIPMENT LOADS WILL OPERATE. USE PLANKING 'MATTS' OR OTHER SUITABLE PROTECTION DESIGNED TO SPREAD EQUIPMENT LOADS AS MAY BE NECESSARY. REPAIR ANY DAMAGE TO (E) GRAVEL SURFACING OR SUB GRADE WHERE SUCH DAMAGE IS DUE TO THE CONTRACTORS OPERATIONS.

16. DAMAGE TO (E) STRUCTURES AND/OR UTILITIES RESULTING FROM CONTRACTORS NEGLIGENCE SHALL BE REPAIRED AND/ OR REPLACED TO THE OWNERS SATISFACTION AT NO ADDITIONAL COST TO THE CONTRACT.

17. ALL SUITABLE BORROW MATERIAL FOR BACK FILL OF THE SITE SHALL BE INCLUDED IN THE BID. EXCESS TOPSOIL AND UNSUITABLE MATERIAL SHALL BE DISPOSED OF OFF SITE AT LOCATIONS APPROVED BY GOVERNING AGENCIES AT NO ADDITIONAL COST TO THE CONTRACT.

mobilitie

PROJECT NO:	9FLB000962F
DRAWN BY:	RC
CHECKED BY:	SJB

D	01-09-18	REVISION
C	11-28-17	REVISION
B	10-15-17	REVISION
A	09-03-17	FOR CLIENT REVIEW

KMB DESIGN GROUP, LLC

Stephen A. Bray

PROFESSIONAL ENGINEER

STEPHEN A. BRAY LICENSE No.68902 STATE OF FLORIDA PROFESSIONAL ENGINEER

FL LICENSE 68902 1/9/18

IT IS A VIOLATION OF THE LAW FOR ANY PERSON, UNLESS THEY ARE ACTING UNDER THE DIRECTION OF A LICENSED PROFESSIONAL ENGINEER, TO ALTER THIS DOCUMENT

MI90XS507F

MIAMI BEACH, FL 33141 ' 24'-6"

STEEL POLE

SHEET TITLE

GENERAL NOTES

SHEET NUMBER

GN-3

SPECIAL PURPOSE

SECTION 10, TOWNSHIP 53 SOUTH, RANGE 42 EAST
MIAMI–DAE COUNTY, FLORIDA
FOR: KIMLEY–HORN

SUNSHINE STATE ONE CALL
TICKET: 191706089

FLOOD NOTE

ACCORDING TO MY INTERPRETATION OF COMMUNITY PANEL NUMBER 120651 0307 L OF THE FEDERAL EMERGENCY MANAGEMENT AGENCY (FEMA) NATIONAL FLOOD INSURANCE PROGRAM (NFIP) FLOOD INSURANCE RATE MAP (FIRM) FOR THE CITY OF MIAMI BEACH, MIAMI–DADE COUNTY, FLORIDA, DATED 9/11/2009, THE SUBJECT PROPERTY IS IN FLOOD ZONE "AH", IE, "SPECIAL FLOOD HAZARD AREAS SUBJECT TO INUNDATION BY THE 1% ANNUAL CHANCE FLOOD; BASE FLOOD ELEVATIONS DETERMINED".

NOTE: THE BASE FLOOD ELEVATION DEPICTED ON THE COMMUNITY PANEL, FOR THE LOCATION OF THE SUBJECT PROPERTY, IS 8 FEET NGVD'29.

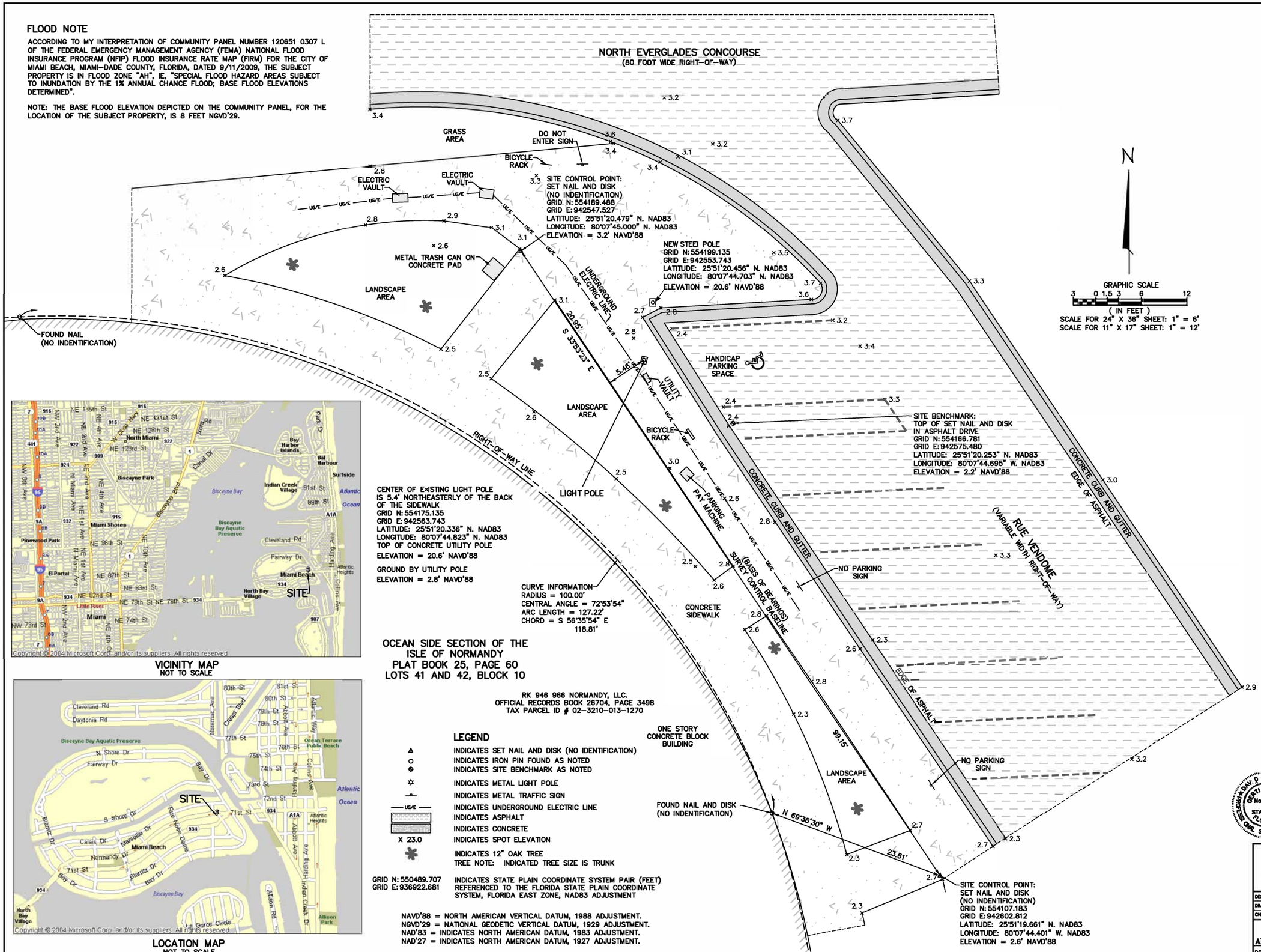

SURVEYOR'S NOTES

1. BEARINGS HEREON ARE REFERENCED TO GRID NORTH AS ESTABLISHED BY THE FLORIDA STATE PLANE COORDINATE SYSTEM, FLORIDA EAST ZONE, NAD'83 ADJUSTMENT, AS EVIDENCED BY THE BEARING OF SOUTH 33°53'23" EAST ALONG THE SURVEY CONTROL BASELINE.

2. UNDERGROUND UTILITY LINES DEPICTED HEREON ARE BASED UPON OBSERVED DELINEATIONS MADE BY UTILITY LOCATION PERSONNEL RESPONDING TO A UTILITY LOCATION REQUEST MADE BY THIS OFFICE TO THE SUNSHINE STATE ONE–CALL 811 UTILITY LOCATION SERVICE, TICKET # 191706089. ADDITIONAL BURIED UTILITIES MAY EXIST WITHIN THE PROJECT AREA, THAT WERE NOT DELINEATED AS A RESULT OF OUR UTILITY LOCATION REQUEST, AND ARE NOT DEPICTED HEREON. NO ADDITIONAL SUB–SURFACE INVESTIGATIONS WERE MADE BY THIS OFFICE AS A PART OF THIS SURVEY.

3. THE SPECIAL PURPOSE SURVEY SHOWN HEREON IS BASED ON ACTUAL FIELD MEASUREMENTS AND OBSERVATIONS DATED JUNE 12, 2017.

4. REPRODUCTIONS OF THIS SKETCH ARE NOT VALID WITHOUT THE ORIGINAL SIGNATURE AND THE RAISED SEAL OF A FLORIDA LICENSED SURVEYOR AND MAPPER.

5. THE PURPOSE OF THIS SURVEY IS TO ESTABLISH THE LOCATION OF A PROPOSED POLE.

6. LATITUDE, LONGITUDE AND ELEVATIONS DEPICTED HEREON ARE BASED UPON GPS OBSERVATIONS MADE WITH AN EGPS REAL TIME KINEMATIC GPS SYSTEM INCORPORATING A CHAMPION TKO GPS RECEIVER.

7. ELEVATIONS DEPICTED HEREON ARE REFERENCED TO THE NAVD'88 DATUM.

8. THIS SURVEY WAS PREPARED WITHOUT THE BENEFIT OF A TITLE SEARCH OR AN ABSTRACT. THIS OFFICE HAS NOT PERFORMED A SEARCH OF THE PUBLIC RECORDS FOR EXISTING EASEMENTS, RIGHTS–OF–WAY, ABANDONMENTS, ZONING, SETBACKS OR DEED RESTRICTIONS.

9. ADDRESS:
946 NORMANDY DRIVE,
MIAMI BEACH, FL 33141

CENTER OF EXISTING CONCRETE LIGHT POLE (PROPOSED METAL POLE) INFORMATION:

NAD 83
LATITUDE = 25°51'20.34" N ±20'
LONGITUDE = 80°07'44.82" W ±20'

NAD 27
LATITUDE = 25°51'18.99" N ±20'
LONGITUDE = 80°07'45.66" W ±20'

GROUND ELEVATION = 2.8'±3' NAVD'88
GROUND ELEVATION = 4.3'±3' NGVD'29

VICINITY MAP
NOT TO SCALE

LOCATION MAP
NOT TO SCALE

LEGEND

- ▲ INDICATES SET NAIL AND DISK (NO IDENTIFICATION)
- ○ INDICATES IRON PIN FOUND AS NOTED
- ◆ INDICATES SITE BENCHMARK AS NOTED
- ✡ INDICATES METAL LIGHT POLE
- INDICATES METAL TRAFFIC SIGN
- UG/E INDICATES UNDERGROUND ELECTRIC LINE
- INDICATES ASPHALT
- INDICATES CONCRETE
- X 23.0 INDICATES SPOT ELEVATION
- ✱ INDICATES 12" OAK TREE
  TREE NOTE: INDICATED TREE SIZE IS TRUNK

GRID N: 550489.707
GRID E: 936922.681
INDICATES STATE PLAIN COORDINATE SYSTEM PAIR (FEET) REFERENCED TO THE FLORIDA STATE PLAIN COORDINATE SYSTEM, FLORIDA EAST ZONE, NAD83 ADJUSTMENT

NAVD'88 = NORTH AMERICAN VERTICAL DATUM, 1988 ADJUSTMENT.
NGVD'29 = NATIONAL GEODETIC VERTICAL DATUM, 1929 ADJUSTMENT.
NAD'83 = INDICATES NORTH AMERICAN DATUM, 1983 ADJUSTMENT.
NAD'27 = INDICATES NORTH AMERICAN DATUM, 1927 ADJUSTMENT.

GEOLINE SURVEYING, INC., LB 7082

DAVID G. SHORT
PROFESSIONAL SURVEYOR AND MAPPER
CERTIFICATE OF REGISTRATION NO. 5022

10/03/2017

GEOLINE SURVEYING, INC.
Professional Land Surveyors
13430 NW 104th Terrace, Suite A
Alachua, Florida 32615
(386)418–0500 Fax: (386)462–9986
geoline@geolineinc.com

DESIGNED	FLOYD CURTIS	SCALE	AS SHOWN
DRAWN	FLOYD CURTIS	DATE	SEPTEMBER 18, 2017
CHECKED	DAVE SHORT	PROJECT #	344–56

M90XS507F / 9FLB000962 SITE
LOCATED IN MIAMI–DADE COUNTY, FLORIDA
ADDRESS: 946 NORMANDY DRIVE, MIAMI BEACH, FL 33141

DRAWING# 344–56 | SHEET# 1 OF 1

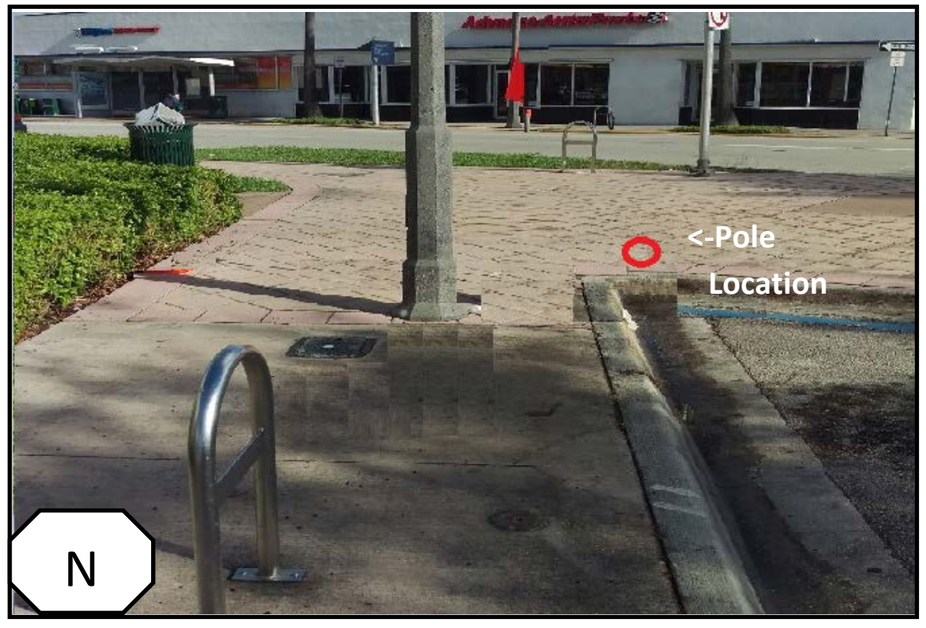

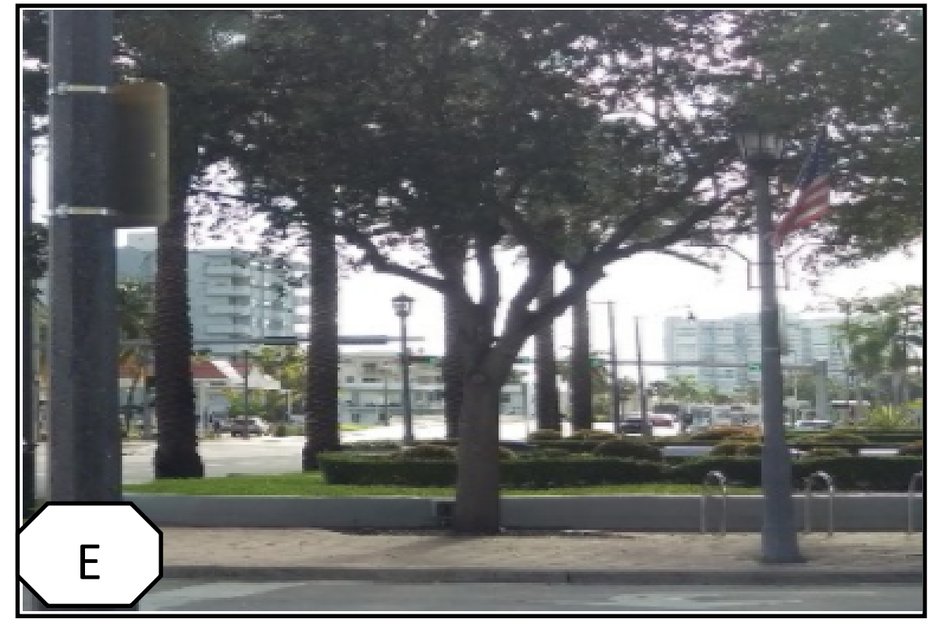

VIEWS FROM

PROPOSED

LOCATION

Approximate Address: 948 Normandy Drive, Miami Beach, Fl 33141

Candidate: MI90XS507F