MIAMIBEACH

OFFICE OF CAPITAL IMPROVEMENT PROJECTS

MIAMI BEACH BANDSHELL REAR CANOPY

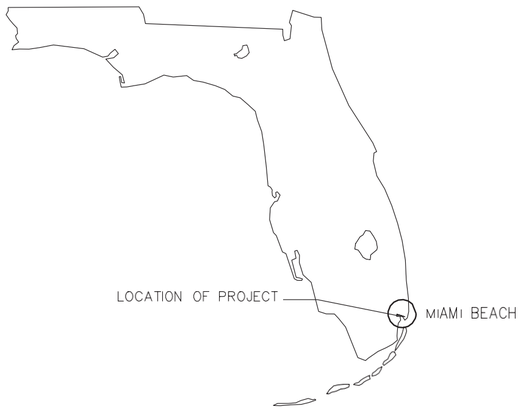

811 KNOW WHAT'S BELOW ALWAYS CALL 811 BEFORE YOU DIG
It's fast. It's free. It's the law.
www.callsunshine.com

JULY 10, 2023

HPB FINAL SUBMITTAL

CITY OF MIAMI BEACH

MAYOR: DAN GELBER

COMMISSIONERS: KRISTEN ROSEN GONZALEZ
LAURA DOMINGUEZ
ALEX J. FERNANDEZ
STEVEN MEINER
RICKY ARRIOLA
DAVID RICHARDSON

CITY MANAGER: ALINA T. HUDAK
CITY ATTORNEY: RAFAEL A. PAZ
CITY CLERK: RAFAEL E. GRANADO
DEPUTY CITY MANAGER: ERIC CARPENTER
CIP DIRECTOR: DAVID MARTINEZ P.E.

PROJECT LOCATION

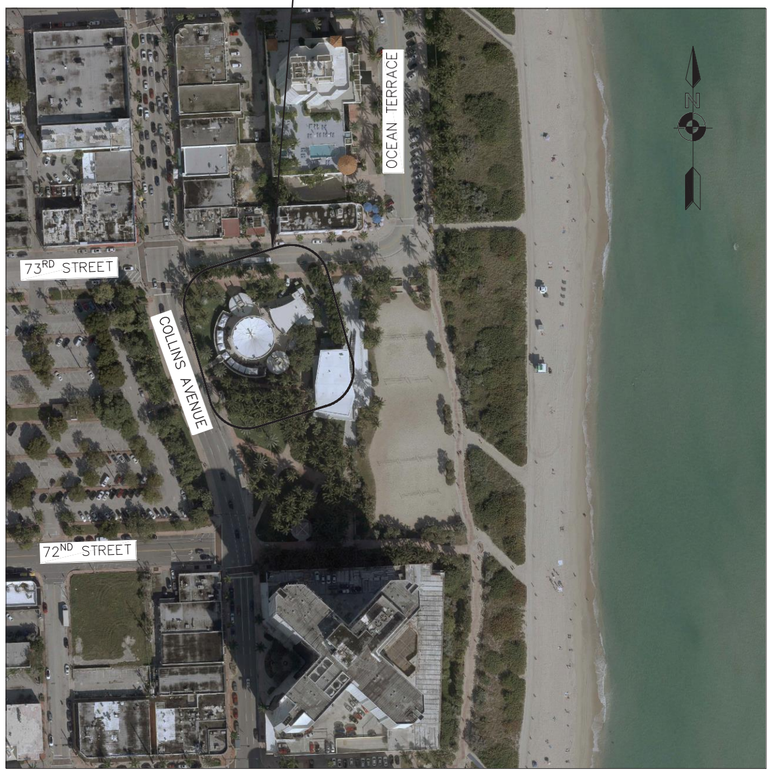

LOCATION MAP

INDEX OF DRAWINGS

G-1	COVER SHEET & INDEX OF DRAWINGS
G-2	PROJECT INFORMATION
G-3	PHOTOS
A-1	SITE PLAN
X-001	COLOR RENDERINGS
X-100	FLOOR PLAN
X-101	ROOF PLAN
X-200	FRAME DETAILS
X-300	SECTION
X-500	3-D VIEWS
S-1	STRUCTURAL NOTES & DETAILS

PREPARED BY:

R.J.Behar & Company, Inc.
Engineers • Planners
6861 S.W. 196th Avenue, Suite 302
Pembroke Pines, Florida · 33332
(954) 680-7771 · Fax: (954) 680-7781

SUB-CONSULTANTS

Giller & Giller, Inc.
The Giller Building
975 Arthur Godfrey Road
Miami Beach, Florida 33140
(305) 538-6324 FAX (305) 538-5921
Giller97@AOL.COM
Reg. #AA C001364
ARCHITECTS INTERIOR DESIGNERS CONSTRUCTION MANAGERS

pvilion

Digitally signed by Ira D Giller
Date: 2023.07.07 10:08:19 -04'00'

MIAMIBEACH

Planning Department
1700 Convention Center Drive, 2nd Floor
Miami Beach, Florida 33139, www.miamibeachfl.gov
305.673.7550

COMMERCIAL - ZONING DATA SHEET

ALL INFORMATION REQUIRED BELOW MUST BE SUBMITTED AS REQUESTED. THE FORMAT OF THIS DOCUMENT MAY NOT BE MODIFIED OR ALTERED IN ANY WAY. SUBMITTALS FOUND INSUFFICIENT OR INCOMPLETE MAY RESULT IN A FAILED REVIEW

ITEM #	Project Information				
1	Address: 7275 COLLINS AVE	Folio number(s):	02-3202-000-0020	Year built:	1961
2	Board file number(s), Determination of Architectural Significance:			Lot Area:	179,500 SF
3	Located within a Local Historic District (Yes or No):	Zoning District:	GU	Lot width:	500'
4	Individual Historic Site (Yes or No):	Yes		Lot Depth:	VARIES
5	Base Flood Elevation:	+8.0 NGVD	Grade value in NGVD:		+6.38
6	Adjusted grade (BFE+Grade / 2):	+7.19	Free board:	-0.81	
7	Proposed Use:	REAR CANOPY OVER EXISTING BANDSHELL SEATING			
8	Proposed Accesory Use:				
9	Signed and sealed Landscape Plans (Tree/Vegetation Survey, Tree Disposition Plan, and Irrigation Plan):	N/A NO CHANGE TO SITE PLAN			
	ZONING INFORMATION / CALCULATION	**Required**	**Existing**	**Proposed**	**Deficiencies**
13	Floor Area Ratio (FAR)	1.5	0.26	NO CHANGE	0
14	Building Height	50' MAX	35'-4"	13'-8 3/4"	0
15	At grade parking lot on the same lot	N/A	N/A	N/A	
a	Front setbacks				
b	Side interior setback				
c	Side facing street setback				
d	Rear setback				
16	**Subterrenean, Pedestal & Tower (non-Oceanfront)**	**Required**	**Existing**	**Proposed**	**Deficiencies**
a	Front setbacks	15'	21'-7"	21'-7"	0
b	Side interior setback	Exist. Historic	Exist. Historic	Exist. Historic	0
c	Side facing street setback	10'	47'-9"	72'	0
d	Rear setback	75'	361'	361'	0
17	**Subterrenean, Pedestal & Tower (non-Oceanfront)**	**Required**	**Existing**	**Proposed**	**Deficiencies**
a	Front setbacks	N/A			
b	Side interior setback	N/A			
c	Side facing street setback	N/A			
d	Rear setback	N/A			
18	**Minimum Apartment Unit Size**	**Required**	**Existing**	**Proposed**	**Deficiencies**
a	New Construction	N/A			
b	Rehabilitated Buildings	N/A			
c	Hotel Unit	N/A			
19	**Average Apartment Unit Size**	**Required**	**Existing**	**Proposed**	**Deficiencies**
a	New Construction	N/A			
b	Rehabilitated Buildings	N/A			
c	Hotel Unit	N/A			
20	Required Open-space ratio (RPS, CPS)	N/A			
21	Parking	0	2	0	
22	Loading	0	2	0	

Notes: Indicate N/A if not applicable.

SCOPE OF WORK:

THE PROJECT CONSISTS OF **LEVEL 2 ALTERATIONS TO AN EXISTING HISTORIC BANDSHELL**. THE SCOPE OF WORK IS AS FOLLOWS:

EXTERIOR:
ADD 2,500 S.F. REAR CANOPY OVER THE EXISTING ELEVATED SEATING PLATFORM

INTERIOR: NO WORK

SCOPE OF WORK BY DISCIPLINE:

1. **BUILDING** - LEVEL 2 ALTERATIONS TO EXISTING HISTORIC BANDSHELL. NO CHANGE OF USE. ADD NEW CANOPY OVER EXISTING SEATING PLATFORM
2. **PLUMBING** - NO WORK
3. **MECHANICAL** - NO WORK
4. **ELECTRICAL** - NO WORK
5. **FIRE ALARM** - NONE
6. **FIRE BUILDING REVIEW** - NO CHANGES TO EXISTING OCCUPANT LOAD OR FIRE SEPARATIONS.
7. **FIRE SPRINKLER** - NONE
8. **PLANNING** - BUILDING IS LISTED ON THE NATIONAL REGISTER OF HISTORIC BUILDINGS. NO ZONING CHANGE OF USE. NO EXTERIOR ALTERATIONS EXCEPT NEW REAR CANOPY.
9. **LANDSCAPE** - NO ALTERATIONS TO EXISTING LANDSCAPING. NO NEW LANDSCAPE AREAS.
10. **FLOOD** - EXISTING OPEN BANDSHELL. NO ADDED FLOOR. EXTERIOR REAR CANOPY ONLY
11. **ENVIRONMENTAL** - NO INCREASE TO EXISTING SEWER CONTRIBUTIONS; NO AIR QUALITY CHANGES; NO STORM WATER CHANGES.
12. **ELEVATOR** - NONE
13. **PUBLIC WORKS** - NO EXTERIOR SITEWORK. NO SITE ACCESS CHANGES.
14. **TRANSPORTATION** - NO INCREASE TO EXISTING OCCUPANT LOAD. NO SITE ACCESS CHANGES.

FOLIO & LEGAL DESCRIPTION:

FOLIO NO.: 02-3202-000-0020
LEGAL DESCRIPTION: LOT 8 BEING A PORTION OF ORIG GOVT. LOT 6 & PORTION LYING EAST & ADJACENT WEST OF EROSION CONTROL LINE PER P.B. 105-62. LOT SIZE 500.000' X 359'.

FLOOD ZONE DATA:

ZONE X - BASE FLOOD ELEVATION = 500 YEAR FLOOD
ZONE AE - BASE FLOOD ELEVATION = 8.00 NGVD

OCCUPANCY TYPE:

ASSEMBLY, TYPE A-3 WITHOUT FIXED SEATING

CODE STATEMENT:

TO THE BEST OF THE ARCHITECT'S KNOWLEDGE, THE PLANS AND SPECIFICATIONS COMPLY WITH THE APPLICABLE MINIMUM BUILDING CODES AND APPLICABLE FIRE SAFETY STANDARDS AS DETERMINED BY THE LOCAL AUTHORITY IN ACCORDANCE WITH THIS SECTION AND 633 FLORIDA STATUTES.

CODE REVIEW:

APPLICABLE CODES:
2020 FLORIDA BUILDING CODE EXISTING
2020 FLORIDA BUILDING CODE ACCESSIBILITY
FLORIDA FIRE PREVENTION CODE, 7TH ED.
N.F.P.A. 101 LIFE SAFTEY CODE 2021
2020 FLORIDA BUILDING CODE ENERGY
2020 FLORIDA BUILDING CODE FUEL & GAS
2020 FLORIDA BUILDING CODE PLUMBING
2020 FLORIDA BUILDING CODE MECHANICAL
2020 FLORIDA BUILDING CODE ELECTRICAL

CONSTRUCTION TYPE:
AS PER FBC 3102.3, NON-COMBUSTIBLE FRAME OR CABLE-SUPPORTED STRUCTURES COVERD BY AN APPROVED MEMBRANE IN ACCORDANCE WITH SECTION 3102.3.1 SHALL BE CLASSIFIED AS **TYPE IIB.**

Giller & Giller, Inc.
The Giller Building
1775 Alton Road
Miami Beach, Florida 33140
(305) 538-6324 FAX (305) 538-5921
Ira D. Giller, AIA
Reg. JAA C001364
ARCHITECTS INTERIOR DESIGNERS CONSTRUCTION MANAGERS

pvilion
Pvilion Technologies LLC
64 John St.
Brooklyn, NY 11201

R.J.Behar & Company, Inc.
Engineers - Planners
6861 S.W. 196 AVE. #302
PEMBROKE PINES, FL 33332

Digitally signed by Ira D Giller
Date: 2023.07.07 10:08:45 -04'00'

MIAMI BEACH BANDSHELL REAR CANOPY
CITY OF MIAMI BEACH
7275 COLLINS AVENUE MIAMI BEACH, FLORIDA

SHEET TITLE: PROJECT INFORMATION

COPYRIGHT © 2023 Giller & Giller, Inc. ALL RIGHTS RESERVED

DATE: 7/2023

SHEET # G-2

ARCH COMM # 23107

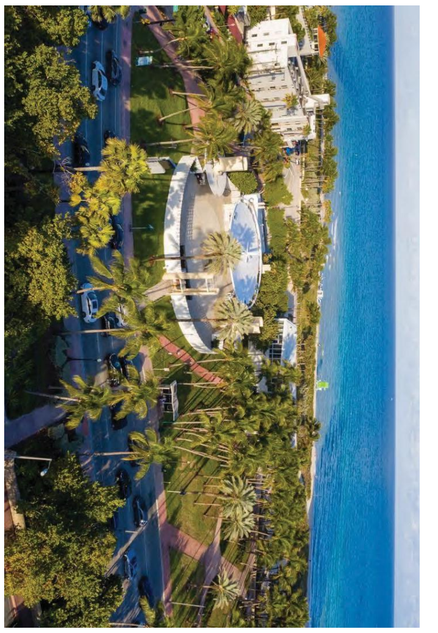

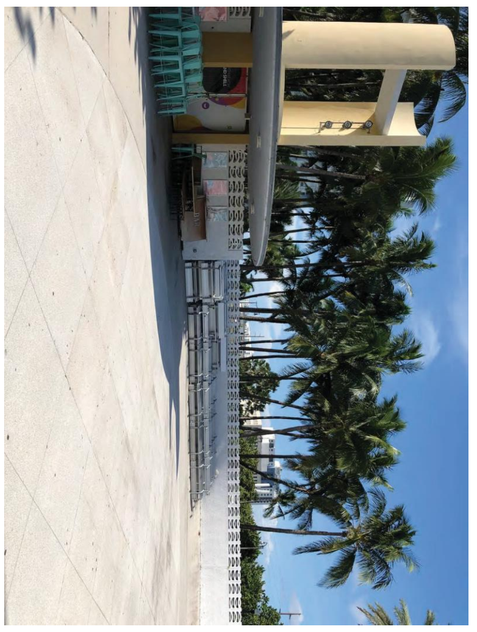

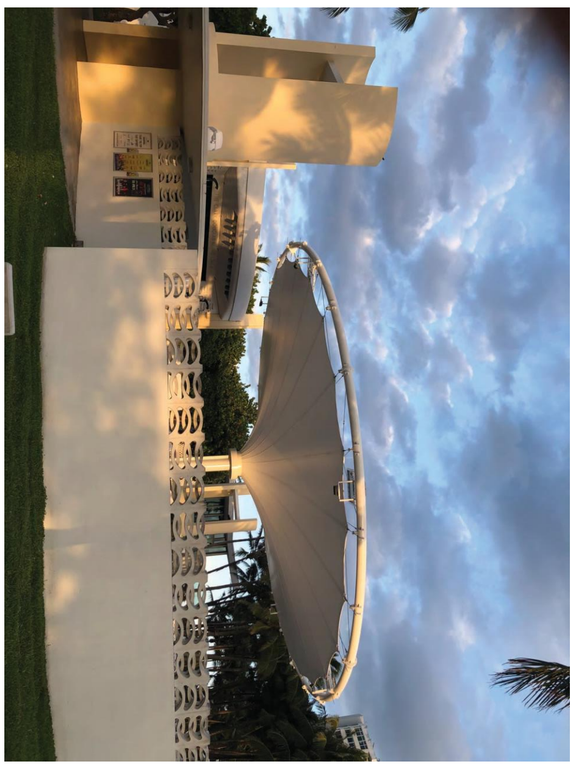

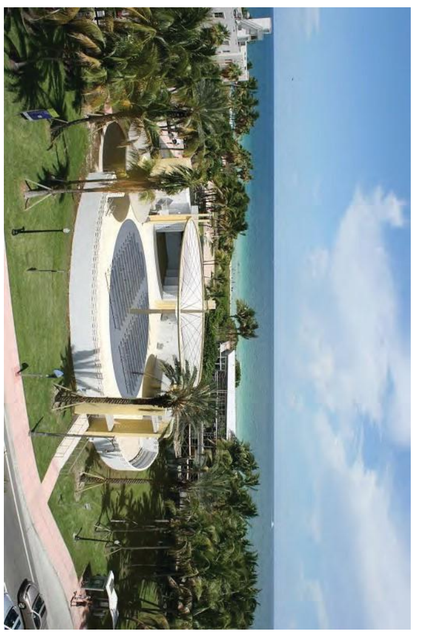

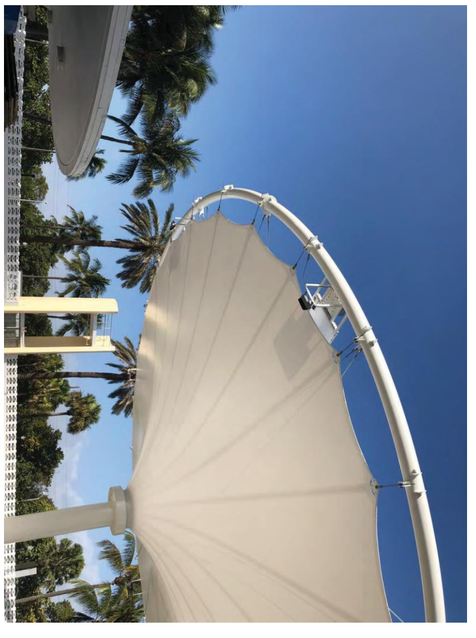

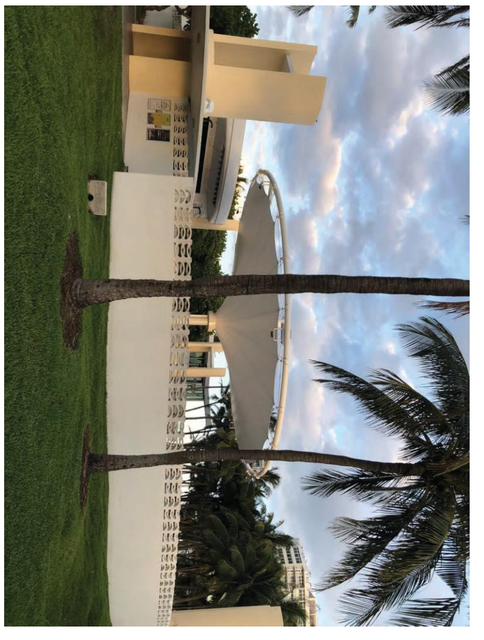

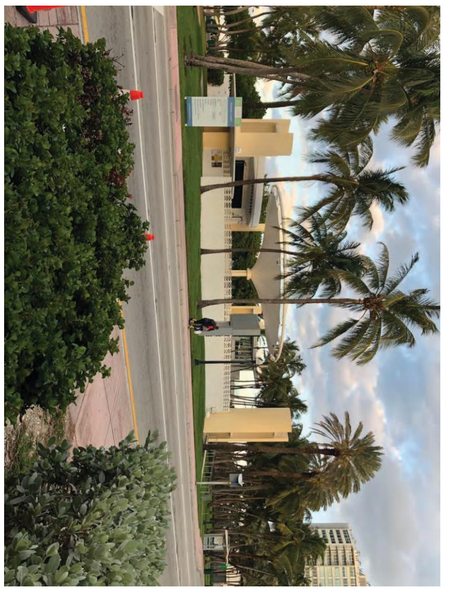

SHEET # G-3	SHEET TITLE: PHOTOS	MIAMI BEACH BANDSHELL REAR CANOPY CITY OF MIAMI BEACH 7275 COLLINS AVENUE MIAMI BEACH, FLORIDA	Digitally signed by Ira D Giller Date: 2023.07.07 7:10:09-16 -04'00'	R.J.Behar & Company, Inc. Engineers • Planners 6861 S.W. 196 AVE. #302 PEMBROKE PINES, FL 33332	pvilion Pvilion Technologies LLC 64 John St. Brooklyn, NY 11201
ARCH COMM # 23107	DATE: 7-10-23	COPYRIGHT © 2023 Giller & Giller, Inc. ALL RIGHTS RESERVED			

Giller & Giller, Inc.
The Giller Building
975 Arthur Godfrey Road
Miami Beach, Florida 33140
(305) 538-6324 FAX (305) 538-5521
Giler97@AOL.COM
Reg #AA C001364
ARCHITECTS INTERIOR DESIGNERS CONSTRUCTION MANAGERS

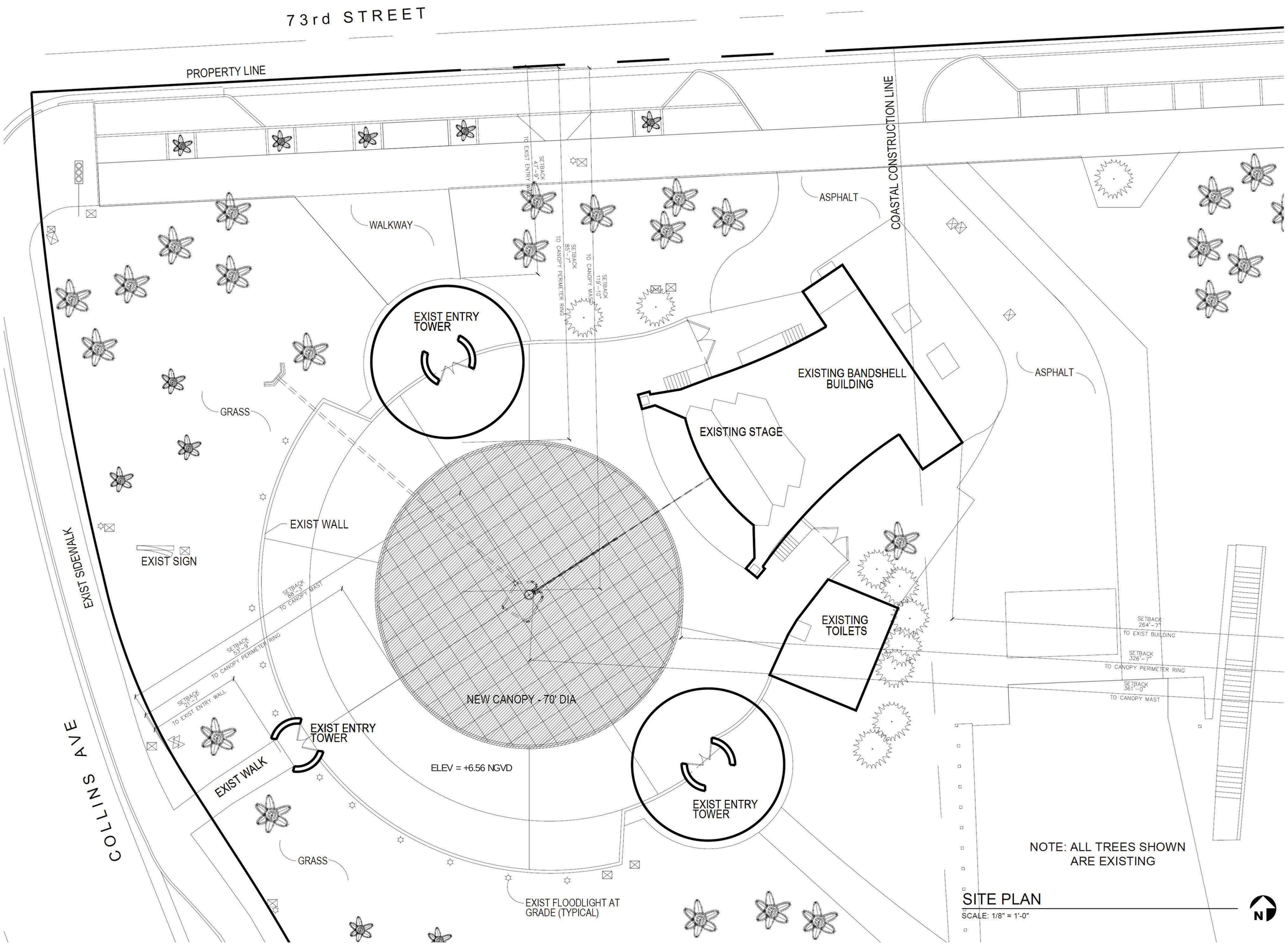

SITE PLAN

SCALE: 1/8" = 1'-0"

Giller & Giller, Inc.
The Giller Building
7175 Harbor View Road
Miami Beach, Florida 33140
(305) 538-6324 Fax (305) 538-5921
Corporate Cert. No. C-2
Reg. AA C001364
ARCHITECTS INTERIOR DESIGNERS CONSTRUCTION MANAGERS

pvilion

Pvilion Technologies LLC
64 John St.
Brooklyn, NY 11201

R.J.Behar & Company, Inc.
Engineers · Planners
6861 S.W. 196 AVE. #302
PEMBROKE PINES, FL 33332

Digitally signed by Ira D Giller
Date: 2023.07.07 10:09:35 -04'00'

MIAMI BEACH BANDSHELL REAR CANOPY
CITY OF MIAMI BEACH

7275 COLLINS AVENUE MIAMI BEACH, FLORIDA

SHEET TITLE: SITE PLAN

COPYRIGHT © 2023 Giller & Giller, Inc. ALL RIGHTS RESERVED

DATE: 7-10-23

SHEET # A-1

ARCH COMM # 23107

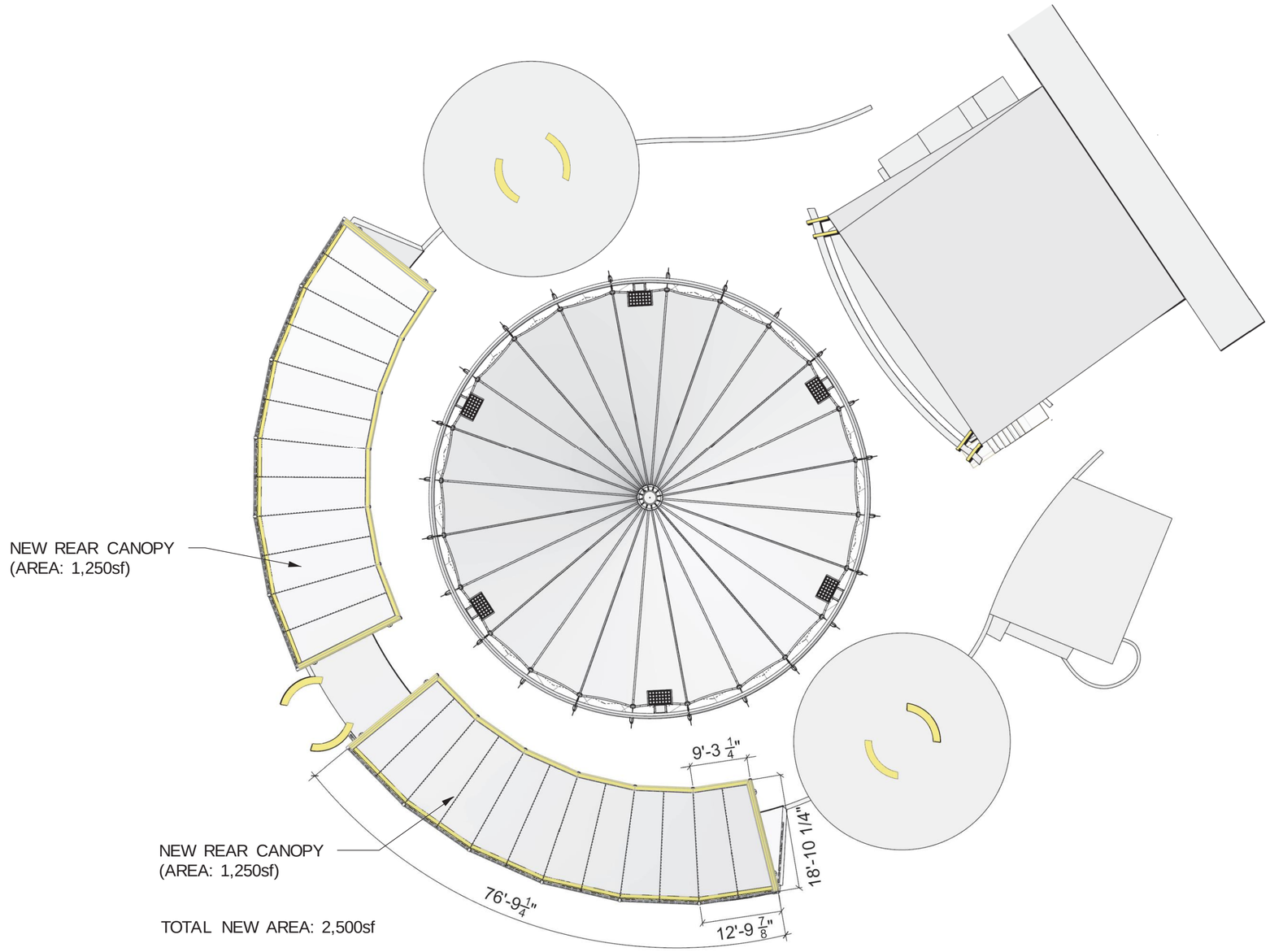

MIAMI BEACH BANDSHELL - ROOF PLAN

SCALE: 1/8" = 1'-0"

N

Giller & Giller, Inc.
The Giller Building
975 Arthur Godfrey Road
Miami Beach, Florida 33140
(305) 538-4324 FAX (305) 538-5921
Qtw@79@AOL.COM
Reg. # AA-0000064
ARCHITECTS INTERIOR DESIGNERS CONSTRUCTION MANAGERS

pvilion
Pvilion Technologies LLC
64 John St.
Brooklyn, NY 11201

R.J.Behar & Company, Inc.
Engineers - Planners
6861 S.W. 196 AVE #302
PEMBROKE PINES, FL 33332

Digitally signed by Ira D Giller
Date: 2023.07.07 10:10:28 -04'00'

MIAMI BEACH BANDSHELL REAR CANOPY
CITY OF MIAMI BEACH
7275 COLLINS AVENUE MIAMI BEACH, FLORIDA

SHEET TITLE: ROOF PLAN

COPYRIGHT © 2023 Giller & Giller, Inc. ALL RIGHTS RESERVED

DATE: 7/10/2023

SHEET # X-100

ARCH COMM # 23107

MIAMI BEACH BANDSHELL - 3D RENDERINGS

NO SCALE

Giller & Giller, Inc.
The Giller Building
975 Arthur Godfrey Road
Miami Beach, Florida 33140
(305) 538-6324 FAX (305) 538-5921
Giller@GILLERARCHITECTS.COM
Reg. AA-C000264
ARCHITECTS INTERIOR DESIGNERS CONSTRUCTION MANAGERS

pvilion
Pvilion Technologies LLC
64 John St.
Brooklyn, NY 11201

R.J.Behar & Company, Inc.
Engineers • Planners
6861 S.W. 196 AVE #302
PEMBROKE PINES, FL 33332

Digitally signed by Ira D Giller
Date: 2023.07.07 10:09:53 -04'00'

MIAMI BEACH BANDSHELL REAR CANOPY
CITY OF MIAMI BEACH
7275 COLLINS AVENUE
MIAMI BEACH, FLORIDA

SHEET TITLE: 3D RENDERINGS

DATE: 7/10/2023

COPYRIGHT ©2023 Giller & Giller, Inc.
ALL RIGHTS RESERVED

SHEET # X-001

ARCH COMM # 23107

MIAMI BEACH BANDSHELL - FLOOR PLAN

SCALE: 1/8" = 1'-0"

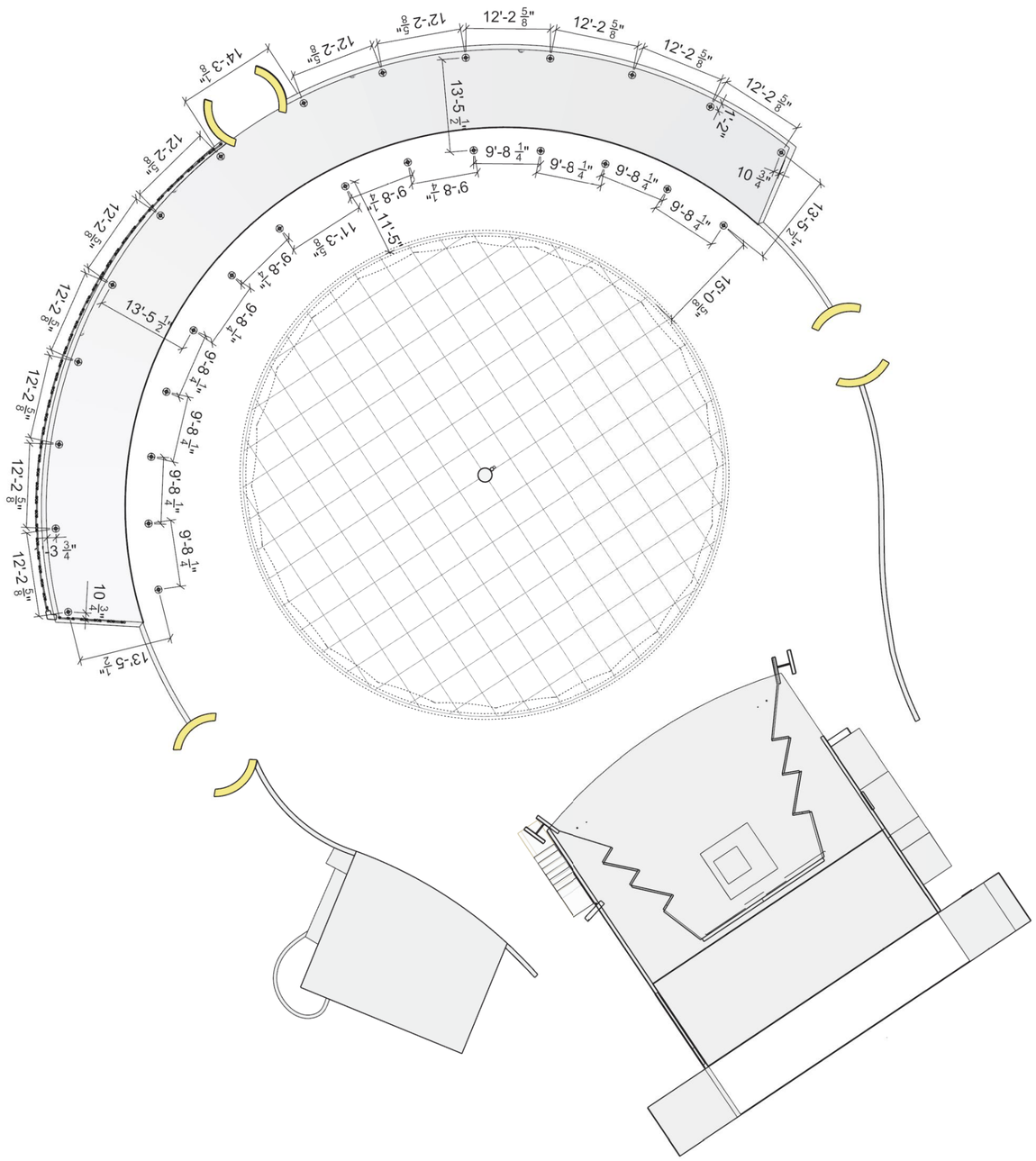

SHEET #	SHEET TITLE:
X-101	FLOOR PLAN
ARCH COMM # 23107	DATE: 7/10/2023

COPYRIGHT © 2023 Giller & Giller, Inc. ALL RIGHTS RESERVED

MIAMI BEACH BANDSHELL REAR CANOPY
CITY OF MIAMI BEACH

7275 COLLINS AVENUE MIAMI BEACH, FLORIDA

Digitally signed by Ira D Giller
Date: 2023.07.07 10:10:47 -04'00'

R.J.Behar & Company, Inc.
Engineers - Planners
6861 S.W. 196 AVE. #302
PEMBROKE PINES, FL 33332

pvilion
Pvilion Technologies LLC
64 John St.
Brooklyn, NY 11201

Giller & Giller, Inc.
The Giller Building
975 Arthur Godfrey Road
Miami Beach, Florida 33140
(305) 538-6324 FAX (305) 538-5921
GIler57@AOL.COM
Reg. #AA C001364
ARCHITECTS INTERIOR DESIGNERS CONSTRUCTION MANAGERS

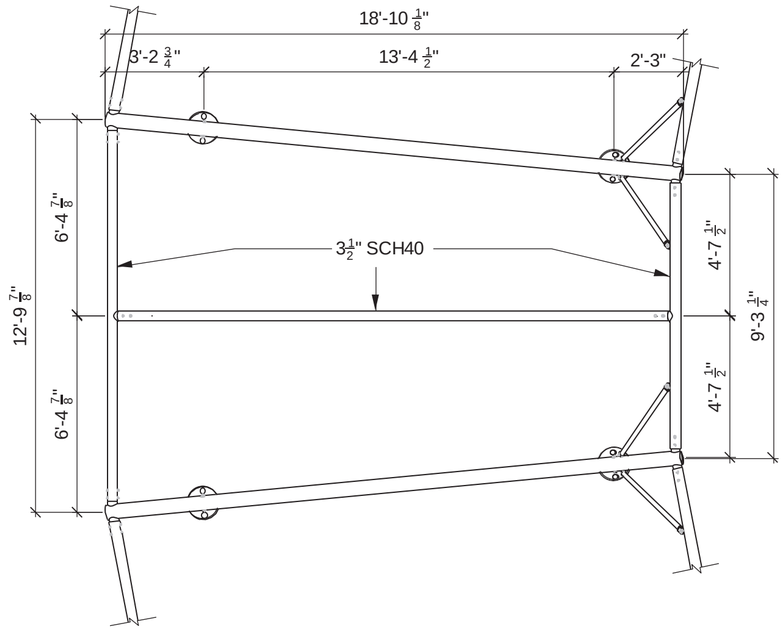

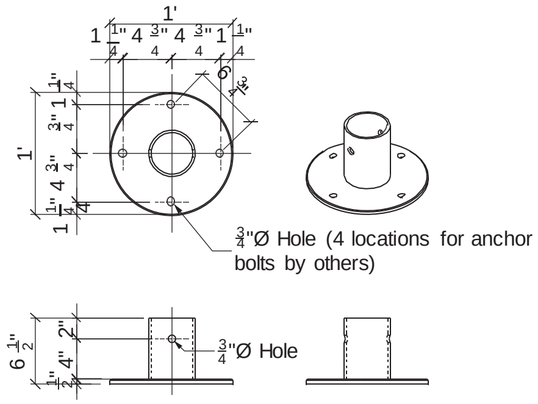

FOOTING DETAIL

SCALE: 2" = 1'-0"

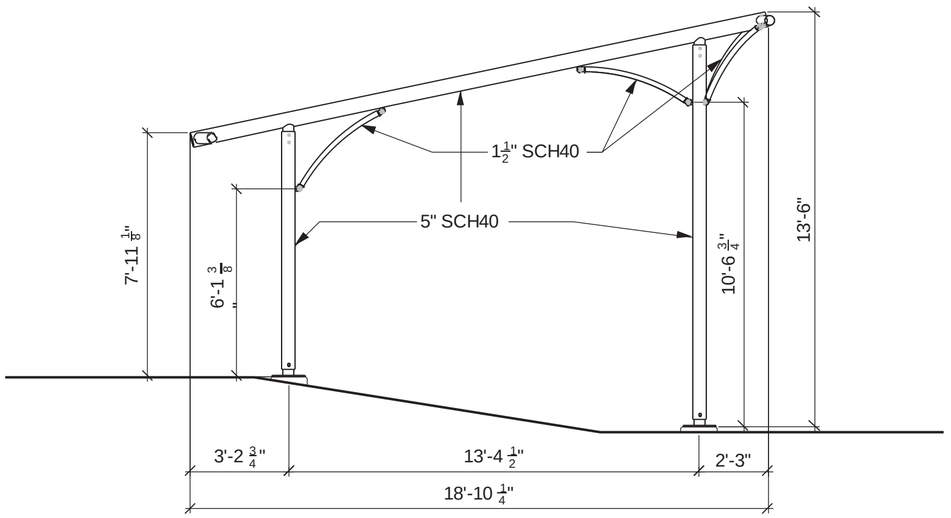

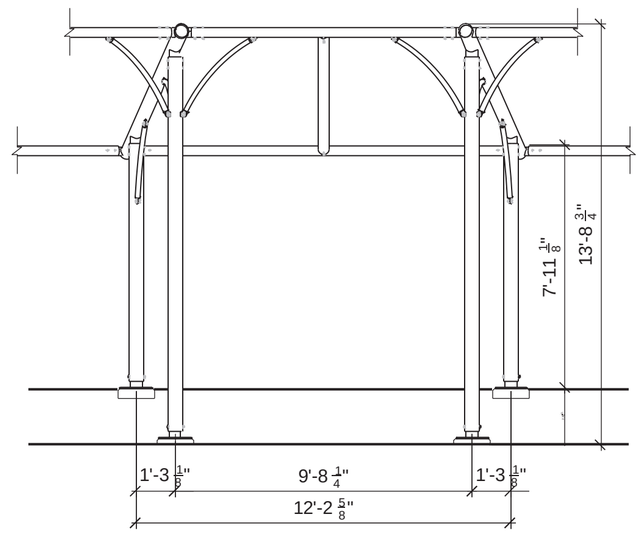

MIAMI BEACH BANDSHELL - FRAME DETAIL

SCALE: 1/2" = 1'-0"

Giller & Giller, Inc.
The Giller Building
975 Arthur Godfrey Road
Miami Beach, Florida 33140
(305) 538-4324 FAX (305) 538-5921
GNe@GNAO.COM
Reg. AA-0000064
ARCHITECTS INTERIOR DESIGNERS CONSTRUCTION MANAGERS

pvilion
Pvilion Technologies LLC
64 John St.
Brooklyn, NY 11201

R.J.Behar & Company, Inc.
Engineers • Planners
6861 S.W. 196 AVE #302
PEMBROKE PINES, FL 33332

Digitally signed by Ira D Giller
Date: 2023.07.07 10:11:11 -04'00'

MIAMI BEACH BANDSHELL REAR CANOPY
CITY OF MIAMI BEACH
7275 COLLINS AVENUE
MIAMI BEACH, FLORIDA

SHEET TITLE: FRAME DETAIL

COPYRIGHT © 2023 Giller & Giller, Inc. ALL RIGHTS RESERVED

DATE: 7/10/2023

SHEET # X-200

ARCH COMM # 23107

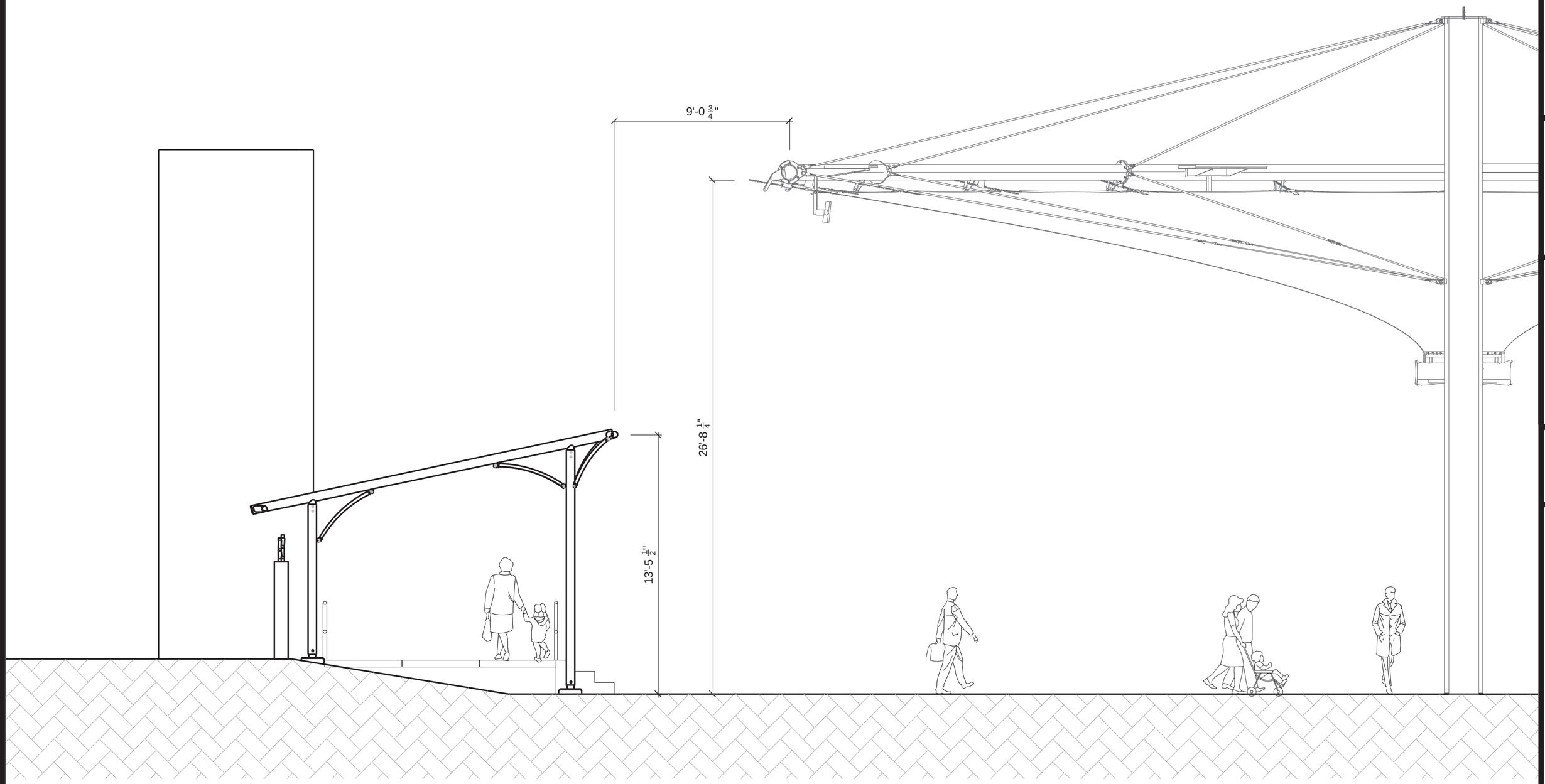

MIAMI BEACH BANDSHELL - SECTION

SCALE: 1/2" = 1'-0"

Giller & Giller, Inc.
The Giller Building
975 Arthur Godfrey Road
Miami Beach, Florida 33140
(305) 538-4324 FAX (305) 538-5921
GNe@GNAS.COM
Reg. AA-C000064
ARCHITECTS INTERIOR DESIGNERS CONSTRUCTION MANAGERS

pvilion
Pvilion Technologies LLC
64 John St.
Brooklyn, NY 11201

R.J.Behar & Company, Inc.
Engineers · Planners
6861 S.W. 196 AVE #302
PEMBROKE PINES, FL 33332

Digitally signed by Ira D Giller
Date: 2023.07.07 10:11:30 -04'00'

MIAMI BEACH BANDSHELL REAR CANOPY
CITY OF MIAMI BEACH
7275 COLLINS AVENUE MIAMI BEACH, FLORIDA

SHEET TITLE: SECTION

DATE: 7/10/2023

COPYRIGHT © 2023 Giller & Giller, Inc. ALL RIGHTS RESERVED

SHEET # X-300

ARCH COMM # 23107

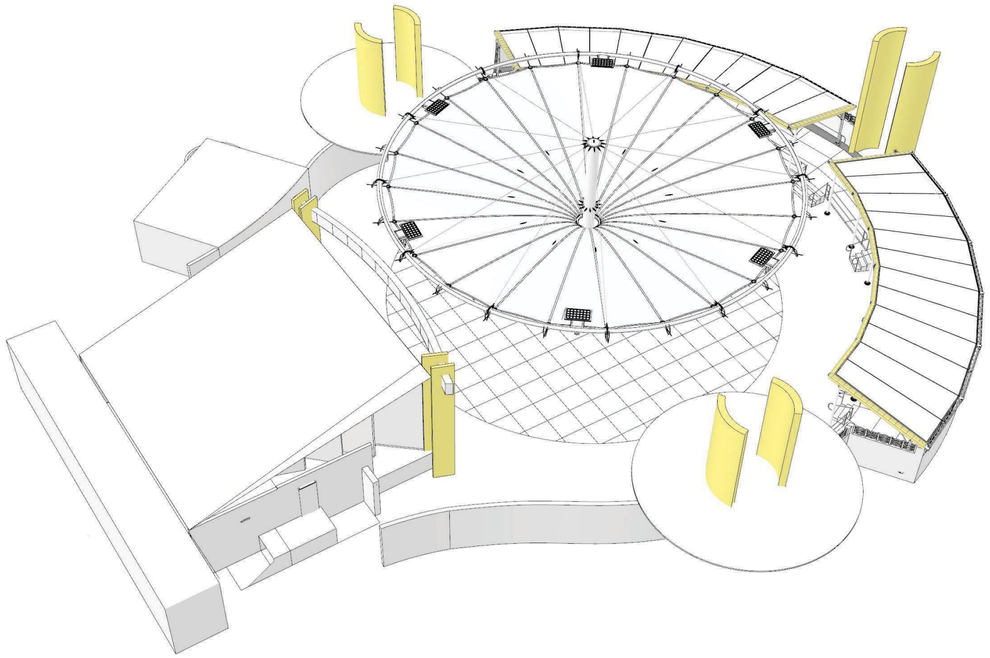

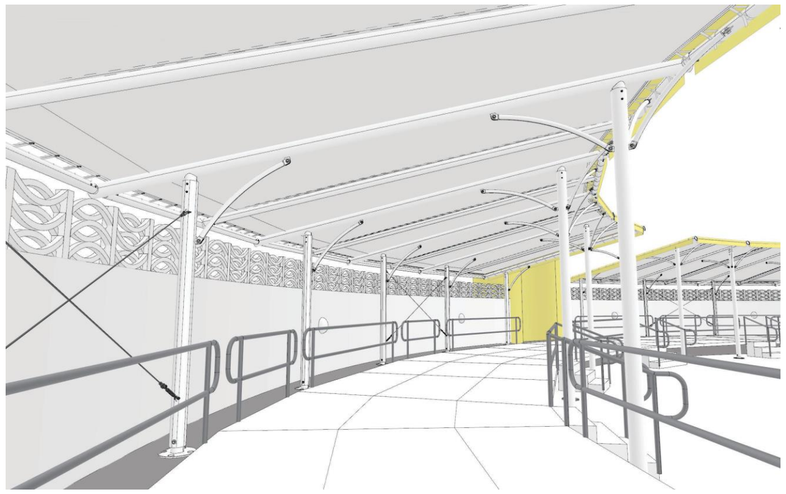

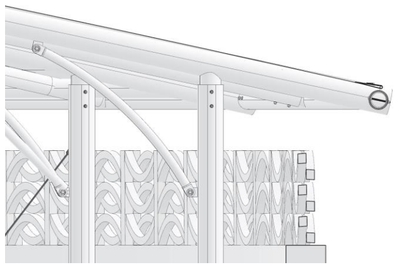

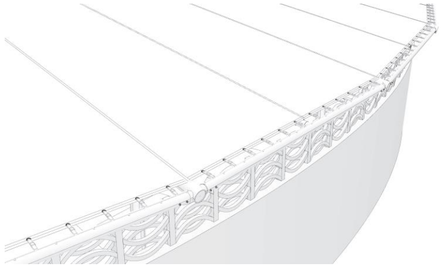

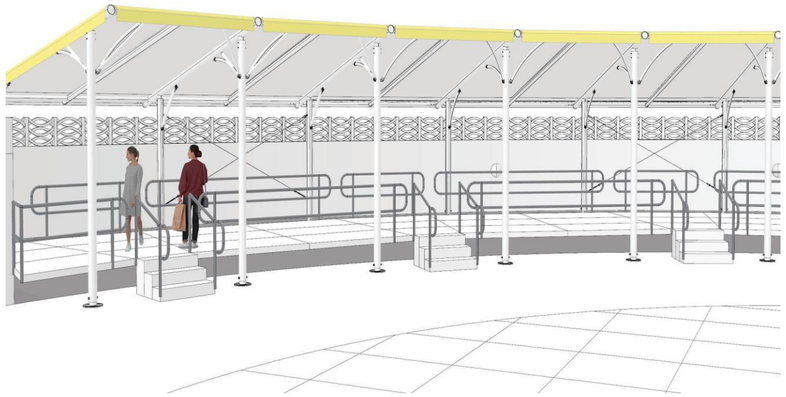

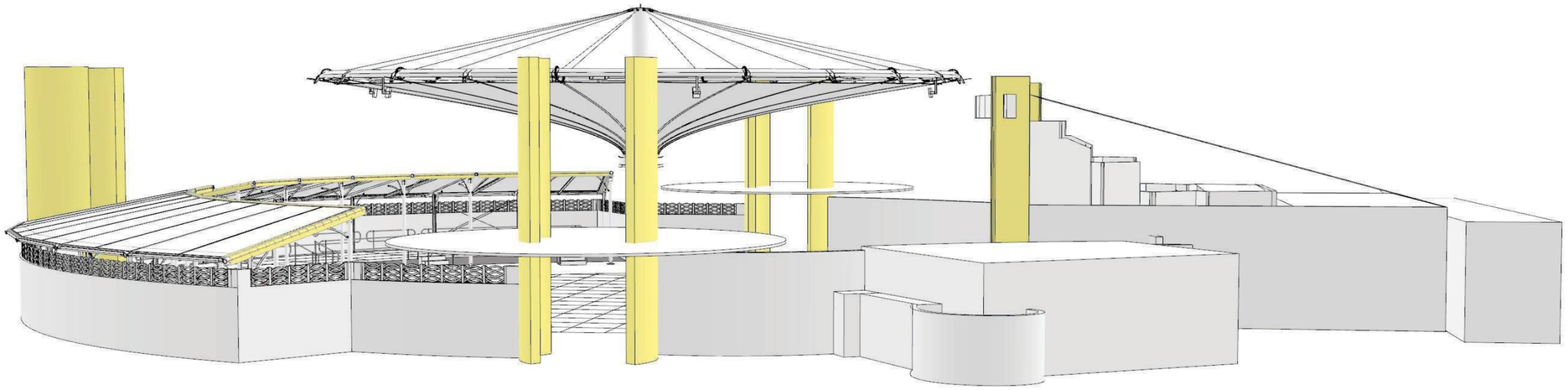

MIAMI BEACH BANDSHELL - 3D VIEWS

NO SCALE

Giller & Giller, Inc.
The Giller Building
975 Arthur Godfrey Road
Miami Beach, Florida 33140
(305) 538-4324 FAX (305) 538-5921
Office@MAG.COM
Reg. AA-0000064
ARCHITECTS INTERIOR DESIGNERS CONSTRUCTION MANAGERS

pvilion
Pvilion Technologies LLC
64 John St.
Brooklyn, NY 11201

R.J.Behar & Company, Inc.
Engineers • Planners
6861 S.W. 196 AVE #302
PEMBROKE PINES, FL 33332

Digitally signed by Ira D Giller
Date: 2023.07.07 10:12:06 -04'00'

MIAMI BEACH BANDSHELL REAR CANOPY
CITY OF MIAMI BEACH
7275 COLLINS AVENUE
MIAMI BEACH, FLORIDA

SHEET TITLE: 3D VIEWS

COPYRIGHT ©2023 Giller & Giller, Inc. ALL RIGHTS RESERVED

DATE: 7/10/2023

SHEET # X-500

ARCH COMM # 23107

STRUCTURAL NOTES:

GENERAL:

1. ALL DIMENSIONS SHALL BE VERIFIED BY CONTRACTOR AT THE JOB SITE AND IN CASE OF ANY DISCREPANCY IN DRAWINGS, ARCHITECT AND/OR ENGINEER SHALL BE NOTIFIED AND OBTAIN THEIR APPROVAL BEFORE PROCEEDING WITH WORK. CONTRACTOR SHALL COMPLY WITH ALL THE PROVISIONS OF THE 2020 FLORIDA BUILDING CODE AND THE ACI 318-19 SPECIFICATIONS. COORDINATION OF THE WORK OF ALL TRADES (STRUCTURAL, PLUMBING, ELECTRICAL, AIR CONDITIONING AND ARCHITECTURAL) AT THE TIME OF ERECTING THE BUILDING STRUCTURE IS CONTRACTOR'S RESPONSIBILITY. NO ADDITIONAL PAYMENTS SHALL BE MADE TO THE CONTRACTOR, FOR THE CONTRACTOR'S FAILURE TO CORRECT CONFLICTING FIELD CONDITIONS AFTER THE STRUCTURE HAS BEEN ERECTED. THE ENGINEERS SHALL NOT BE RESPONSIBLE FOR, NOR HAVE CONTROL OR CHANGE OF CONSTRUCTION MEANS, METHODS OF SEQUENCE, OR PROCEDURES, OR FOR SAFETY PRECAUTIONS AND PROGRAMS. ALL CHANGE ORDERS MUST BE SIGNED AND APPROVED BY THE OWNERS PRIOR TO APPROVAL BY THE ARCHITECT AND/OR ENGINEER. STRUCTURAL CALCULATIONS SHALL BE BASED ON WIND VELOCITY OF 110 MPH IN ACCORDANCE WITH ASCE 7-22. ALSO NEEDS TO COMPLY WITH THE 2020 FLORIDA BUILDING CODE.

CONCRETE:

1. ALL CONCRETE SHALL CONFORM WITH SECTION 346 OF THE FDOT GENERAL SPECIFICATIONS. MINIMUM CONCRETE STRENGTH:
   ALL STRUCTURAL CONCRETE . . . . . 5000 PSI @ 28 DAYS
2. CONTRACTOR TO USE SPECIAL FORM WORK FOR ALL EXPOSED CONCRETE, FOR PROVIDING SMOOTH SURFACE FOR ALL EXPOSED CONCRETE AREAS.
3. PROVIDE VOLCLAY OR SIMILAR WATERPROOFING MEMBRANE TO COVER THE FOUNDATION, SLAB AND EXTERIOR.

REINFORCING STEEL:

4. ALL REINFORCING STEEL SHALL BE ASTM A-615 GRADE 60 ASTM DEFORMATIONS. DETAILING, FABRICATIONS, AND PLACEMENT OF ALL REINFORCEMENT SHALL CONFORM TO THE ACI 318-19 AND CRSI SPECIFICATIONS. CONTRACTOR SHALL PROVIDE ADEQUATE CHAIR TO SUPPORT THE REINFORCING AND TO PREVENT DISPLACEMENT. ALL DISCONTINUOUS ENDS OF ALL TOP REINFORCING SHALL BE HOOKED.
5. COLUMN DOWELS AND REINFORCING SPLICES SHALL NOT BE LESS THAN 30 BAR DIAMETERS (FOR COMPRESSION MEMBERS AND SHALL BE IN ACCORDANCE WITH ACI 318-19 TABLE 1 THRU 8. LAP TOP REINFORCING STEEL AT THE MID SPAN AND BOTTOM REINFORCING STEEL OVER THE SUPPORTS. REINFORCING STEEL SHALL BE FREE OF RUST, SCALE, AND OTHER DELETERIOUS MATTER. REINFORCING CLEAR COVER AS FOLLOWS:
   FOOTING . . . . . 3"

TESTING MATERIAL:

6. CONTRACTOR IS RESPONSIBLE FOR THE EXPENSES OF ALL REQUIRED TESTING, PERFORMED BY APPROVED TESTING LABORATORY. CONTRACTOR SHALL SUBMIT ALL TEXT RESULT TO ENGINEER.

LEGEND:

EXISTING CONCRETE TO REMAIN

EXISTING CONCRETE TO BE DEMOLISH

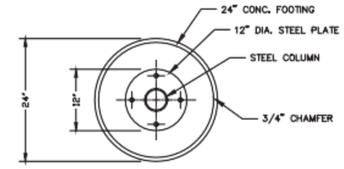

PLAN VIEW - STEEL PLATE

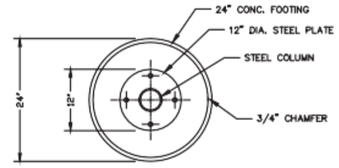

PLAN VIEW - STEEL PLATE

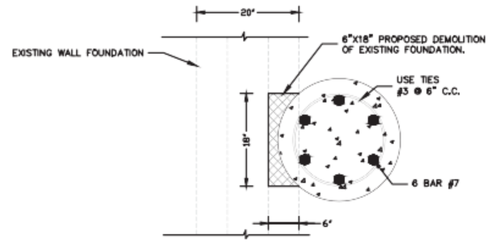

PLAN VIEW - FOOTING

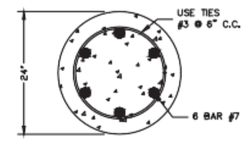

PLAN VIEW - FOOTING

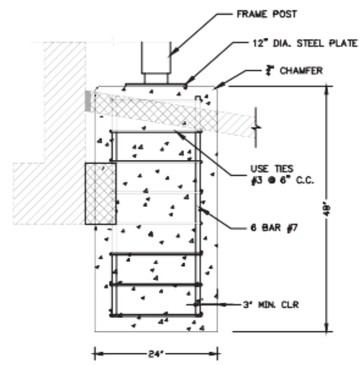

SECTION VIEW

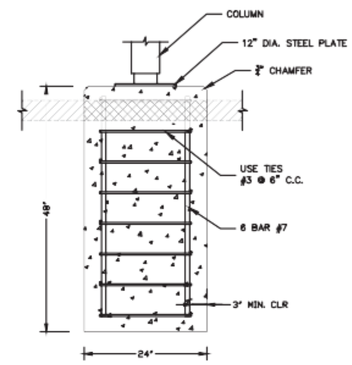

SECTION VIEW

FOOTING DETAIL 1 S-1 | S-1
SCALE: 1" = 1'-0"

FOOTING DETAIL 2 S-1 | S-1
SCALE: 1" = 1'-0"

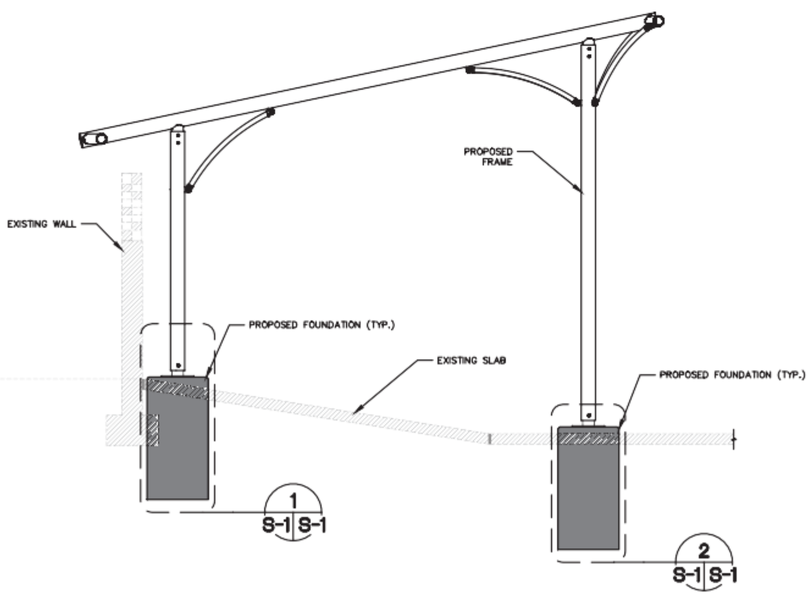

FRAME FOUNDATION VIEW
SCALE: 1/2" = 1'-0"

THIS ITEM HAS BEEN DIGITALLY SIGNED AND SEALED BY GREGORY DOVER, PE, ON THE DATE ADJACENT THE SEAL.

Digitally signed by Gregory Dover
Date: 2023.07.06 18:02:53 -04'00'

PRINTED COPIES OF THIS DOCUMENT ARE NOT CONSIDERED SIGNED AND SEALED AND THE SIGNATURE MUST BE VERIFIED ON ANY ELECTRONIC COPIES.

NOT FOR CONSTRUCTION

Giller & Giller, Inc.
ARCHITECTS INTERIOR DESIGNERS CONSTRUCTION MANAGERS
The Giller Building
275 Arthur Godfrey Road
Miami Beach, Florida 33140
(305) 538-4326 FAX (305) 538-6921
Giller@AOL.COM
Www.GILLERARCHITECTS.COM

pvilion
Pvilion Technologies LLC
64 John St.
Brooklyn, NY 11201

R.J.Behar & Company, Inc.
Engineers • Planners
6861 S.W. 196 AVE. #302
PEMBROKE PINES, FL 33332

MIAMI BEACH BANDSHELL REAR CANOPY
CITY OF MIAMI BEACH
7275 COLLINS AVENUE
MIAMI BEACH, FLORIDA

SHEET TITLE: STRUCTURAL NOTES & DETAILS

COPYRIGHT ©2023 Giller & Giller, Inc. ALL RIGHTS RESERVED

DATE:

SHEET # S-1

ARCH. COMM # 23107