Owner DR. B.G. POLLOCK Mailing Address Permit No. 8770

Lot 17 Block 62 Subdivision LINCOLN No. 1529 Street Jefferson Date Sept. 21-1936

General Contractor Filer Construction Co. 7234 Address

Architect Henry Hohauser Address

3234-02-1350

Front 38 Depth 43-8 Height Stories Use APARTMENT HOUSE 4- units

Type of construction c-b-s- Cost $ 12,500.00 Foundation reinf. concrete Roof flat

---

Plumbing Contractor Markowitz # 9508 Address Date Oct. 27-1936

No. fixtures 18 Gas 8 Rough approved by Date

No. Receptacles

Plumbing Contractor Address Date

No. fixtures set Final approved by Date

Sewer connection - 1 - Septic tank Make Date

EV Electrical Contractor Ast Electric Co. # 7341 Address Date Oct. 16-1936

No. outlets 77 Heaters Stoves Motors 4 Fans Temporary service

Receptacles 37

Rough approved by Date

Electrical Contractor F. C. AST # 7709 Address Date Dec 7-1936

No. fixtures set 48 Final approved by Date

Date of service Dec. 7-1936

Alterations or repairs # 15199- Wire Fence- Wilson, The Fence Man- $ 33.00- Date Dec. 10-1940

BUILDING PERMIT # 19643 Painting.. Harry A. Beitler, painter $ 269:: Jan. 19, 1945

BUILDING PERMIT # 30867 Storage room - 10' x 10' x 8' - 12 x 24 Spread Footing- 4 -5/8 steel rods- Owner, builds $ 500.... Sept. 26, 1949

" " # 34738 Wet sandblasting - All American Sandblasting Co. $ 330...Jan. 2, 1951

34763 Painting - Owner $ 250..... Jan. 2, 1951

BUILDING PERMIT # 39528 Install one window unit in wall(Air conditioning)-C.C.Rockerman, contr.
OK- A.Plaag 10-6-52 $ 35..... Sept. 23, 1952

#57288 Ray Boone Air Cond: 2 - 1 HP window air conditioners - $400.00 - Sept. 11, 1958

#64006 General Window Corporation: Remove casement windows and install awning windows. - $1500. - 1/5/61

#69687 Ray Boone Air Cond.: Install 1 - 1 hp air cond., wall unit - $200. - 7/8/63 OK Plaag 8/16/63

#02891-Al Co Construction-Re-roof 20 sqs.-$830-4-16-73

#08022- J J Gross and SonPainting-Interior painting-$300-9-30-75

#15035 - Harper & Son Roof - tear off replace with standard built up use driveway $2,200.00 5/22/79

ELECTRIC PERMITS

#49869 Jefferscn Stores Ser Corp: 1 Television Antenna- May 13, 1957

#50716 E & E Elec: 1 Center of Distrib, 1 Motor (1HP)- August 22, 1957

#56286 C. J. Kay Elec: 3 Motors (1HP)- Jan. 20, 1961 OK Scarborough 6/23/61

BUILDING PERMITS: #BS891573 - 6-27-89 - Bill Builders Corp. - Change 4 doors replaster and int. paint - comm. - $8,500.00

PLUMBING PERMITS: #BP890974 - Sentry Plumbing - Repipe water - 7-19-89

COASTAL CONTROL ZONE

CUMULATIVE COST OF CONSTRUCTION OF PERMITS ISSUED

DATE ISSUED	PROCESS NO.	DESCRIPTION OF WORK	WORK COST	CUMULATIVE WORK COST	APPRAISED BLDG. VALUE BEFORE REMODEL	%	COMMENTS	BUILDING PERMIT NO.
6-27-89		Change 4 doors Replaster & Int. paint	$8,500.00					B589157

ADDRESS : 1529 JEFFERSON AVE
LEGAL : L17, B62 LINCOLN SUB
FULL ADDRESS :
SECOND ADDRESS:

STATUS : HISTORIC

BUILDING NAME : STARLIGHT APTS
PREVIOUS NAME :
BUILDER : FILER CONST. CO.
CONST. DATE : 1936
STYLE : STREAMLINE MOD.
EXT. FABRIC : STUCCO
ROOF : FLAT
DOORS : ALTERD
ALTERATIONS : YES

ORIGINAL NAME :
ORIG. ARCH. : HOHAUSER, H
ZONING : RM-1
BUILDING SHAPE: CUBE
STORIES : 2
WINDOWS : AWN
CONSTR. TYPE : CBS

FOLIO# :
DISTRICT: HP
HEIGHT :
PHOTO : Y

SPEC. FEATURES: PROJECTING PROW ENTRY BAYS; BASE PLANTERS FLANK; WIDE BAND HORIZONTAL RACING STRIPES; PIERCED MASONRY "X" MOTIF BASEMENT AND ATTIC VENTS; CURVED MAIN ENTRANCE STOOP, DECORATIVE VENTING T BANDED PARAPET;SMALL EYEBROWS.
INTERIOR : NONE CHECKED

SITE : MATURE CHRISTMAS PALM.
SIGNAGE : NONE
ADJACENT SITE :

STAT. SIGNIF. : INTERESTING AND EFFECTIVELY MASSED COMPOSITION, SIMPLE APPLIED DETAIL, HIGH COHESIVEN ESS
ADDITION : N
ADD. ARCH. :
ADD. DATE: 0
ADD. COMMENTS :
SURVEYED BY : CH
RECORDING DATE: / /
UPDATE : 9/11/89 CB
ORIG. USE/COST: $12,500.

COMMENTS :



GENERAL NOTES

[illegible]

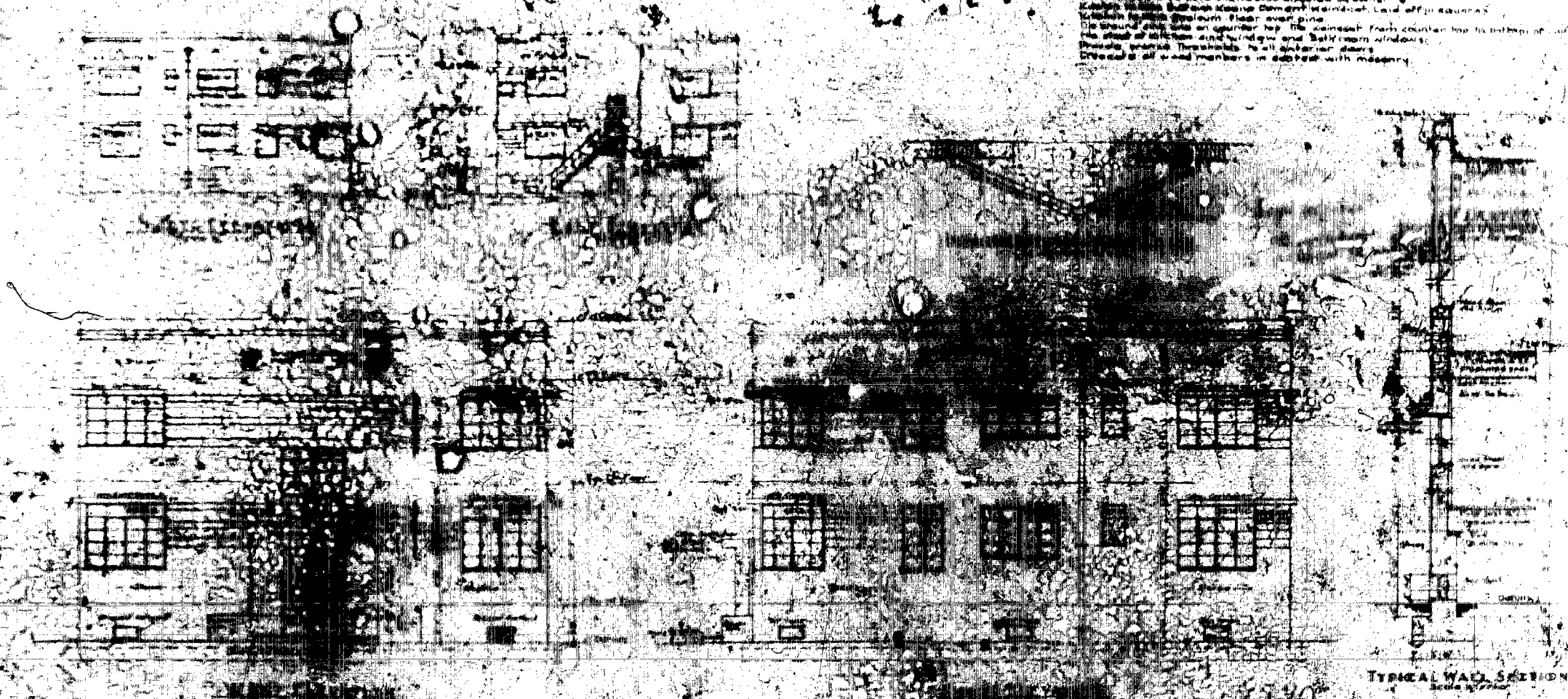

TYPICAL WALL SECTION

1	731	HENRY HORNUSES ARCHITECT
	9/9/30	

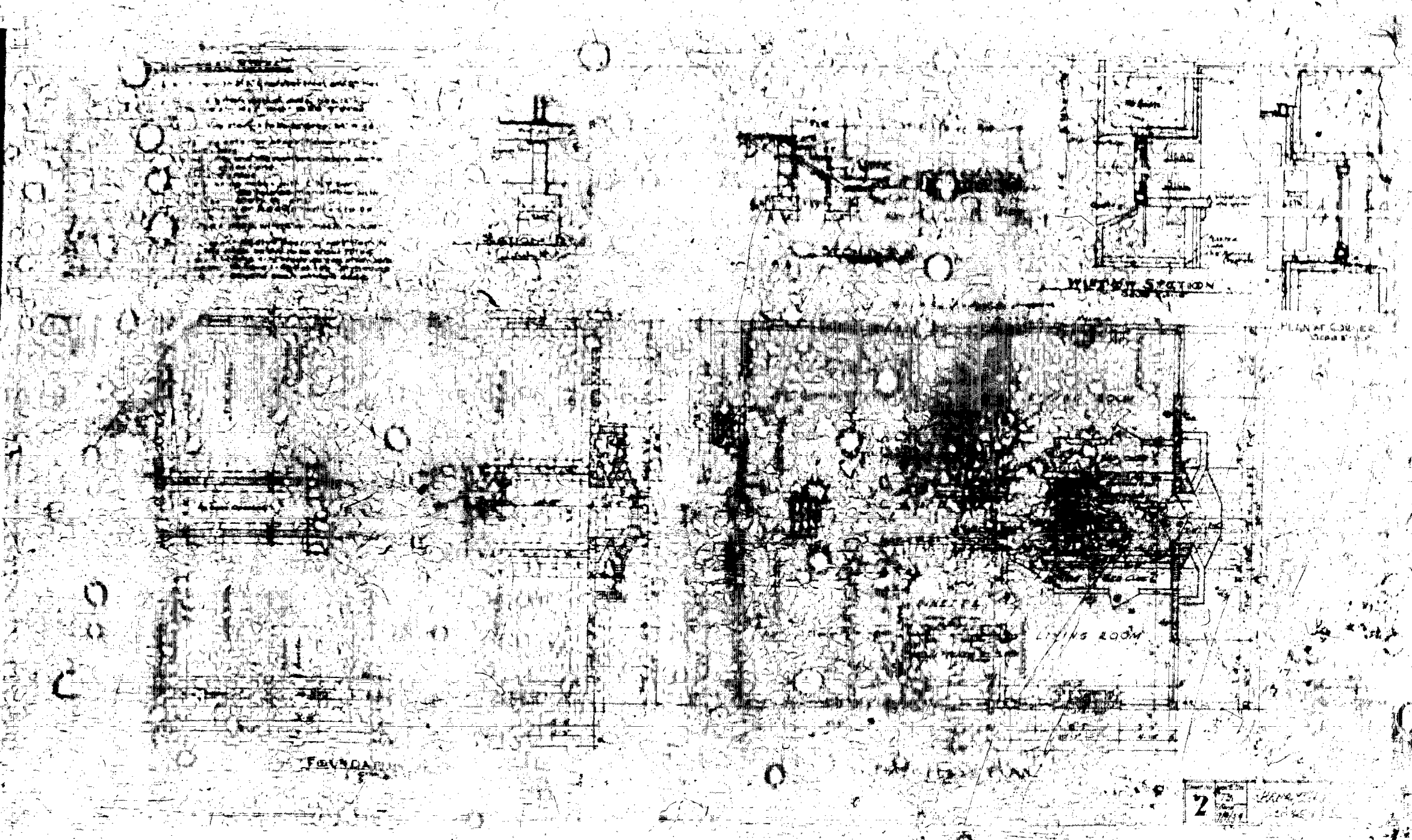
LIVING ROOM
2

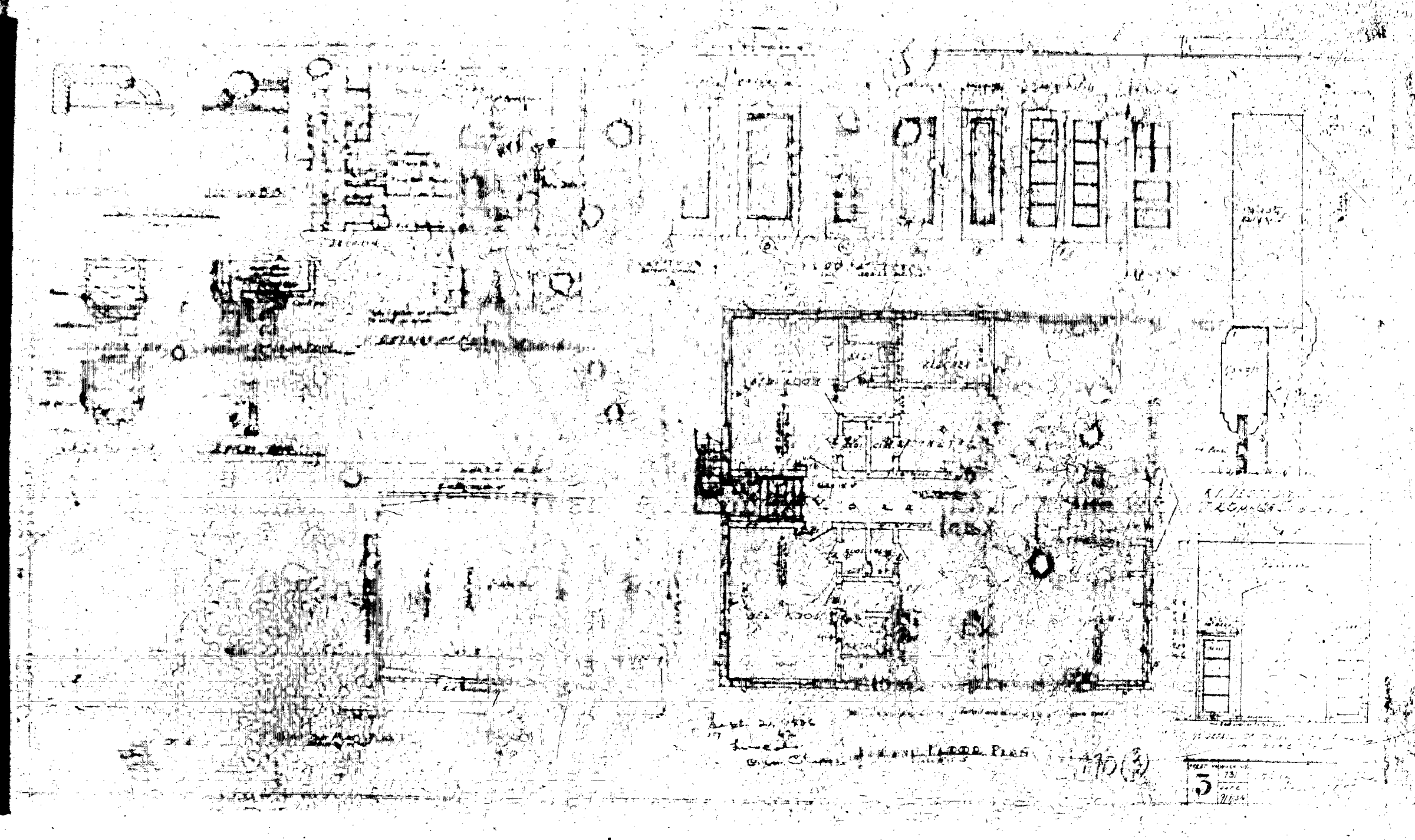

GENERAL NOTES

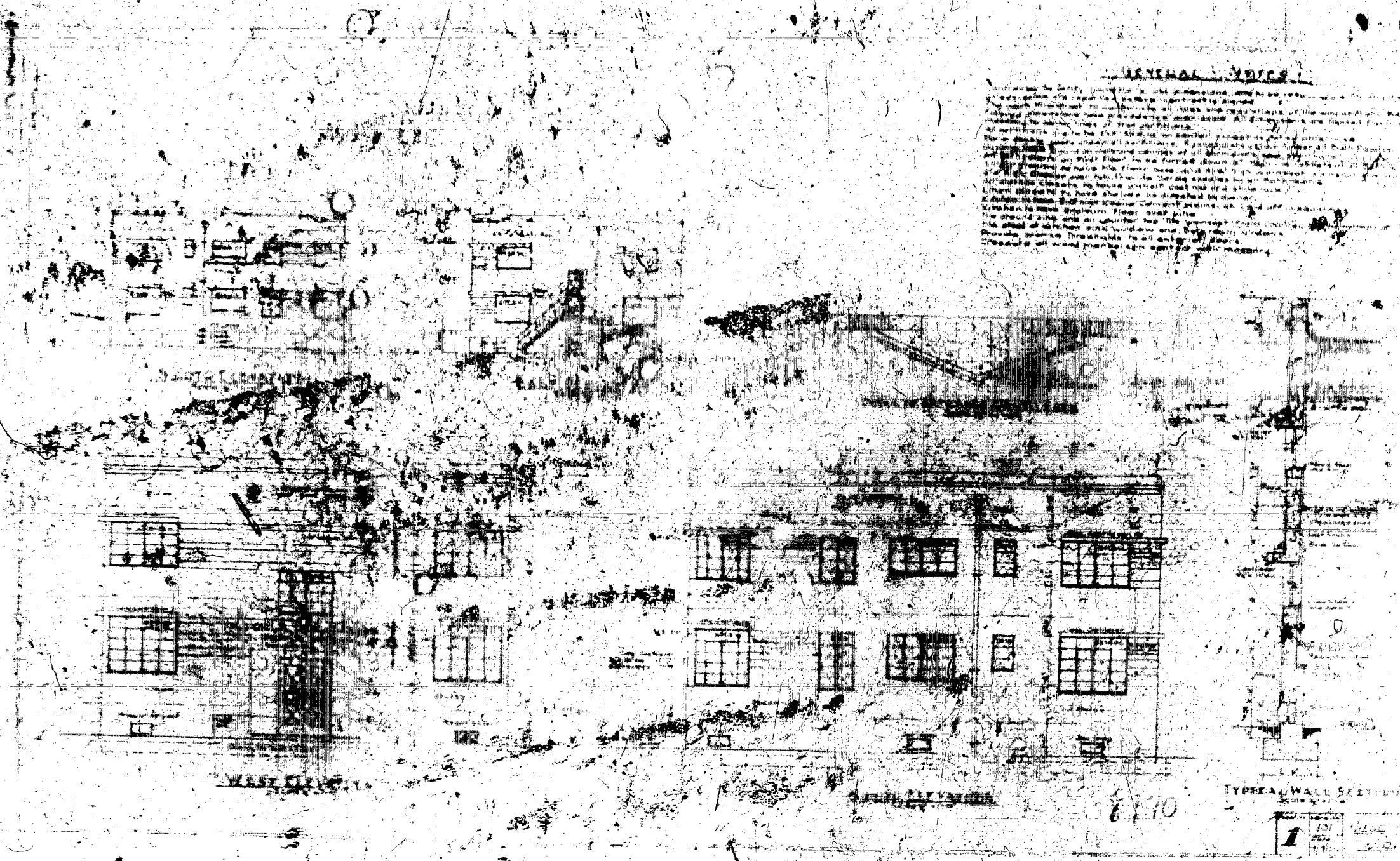

WEST ELEVATION

SOUTH ELEVATION

TYPICAL WALL SECTION

1

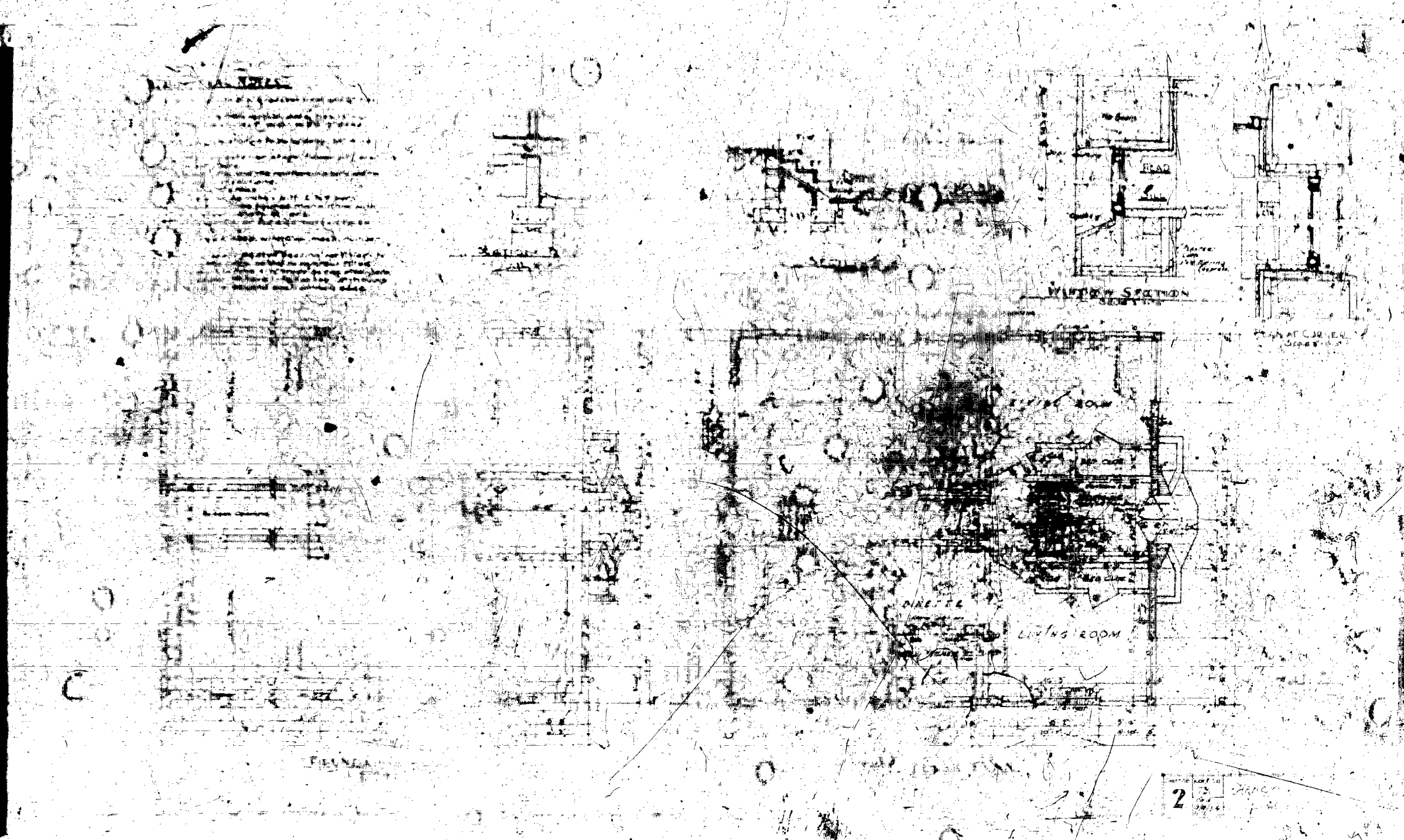
LIVING ROOM
2

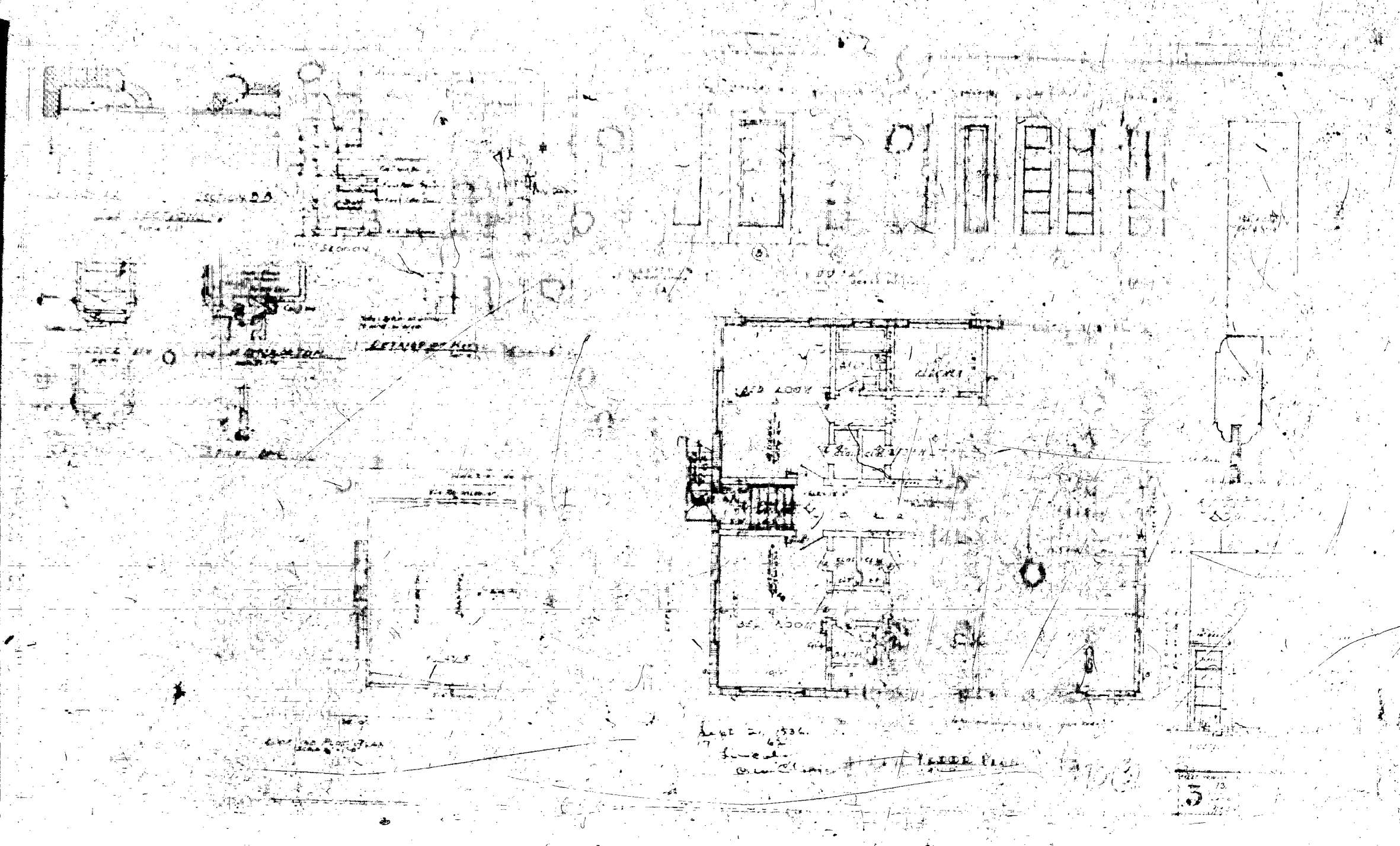

CITY OF MIAMI BEACH
BUILDING DEPARTMENT
1700 CONVENTION CENTER DRIVE
2ND FLOOR - CITY HALL
MIAMI BEACH, FL 33139

NOTICE TO THE CITY OF MIAMI BEACH BUILDING DEPARTMENT OF EMPLOYMENT AS SPECIAL INSPECTOR UNDER THE FLORIDA BUILDING CODE

I, (we) have been retained by: MICHAEL BENAMOU to perform special inspector services under the Florida Building Code at the 1529 Jefferson Ave project on the below listed structures as of 12-7-6 (date). I am a professional engineer licensed in the State of Florida.

Process Number: B0605108 **Master Permit (IF APPLICABLE):** _____

- ○ Special Inspector for Pilings, FBC 1822.1.20
- ○ Special Inspector for Soil Compaction, FBC 1820.3.1
- ○ Special Inspector for Precast Attachments, FBC 1927.12.2 (By P.E. or R.A..)
- ◉ Special Inspector for Reinforced Masonry, FBC 2122.4
- ◉ Special inspection for Steel Bolted & Welded Connections, FBC 2218.2 (By P.E. or R.A..)
- ○ Special Inspector for Trusses over 35 feet long or 6 feet high, FBC 2319.17.2.4.2 (By P.E. or R. A..)
- ○ Special Inspector for _____

NOTE: Only the marked boxes apply.

The following individual's) employed by this firm or me are authorized representatives to perform inspections*

1. SAM LYUBKIN 2. _____
3. _____ 4. _____

***NOTE: FBC 2001 HVZ sections 1927.12.2, 2218.2, 2319.17.4.2 requires either a Registered professional Engineer or Registered Architect to perform the actual inspections.**

I, (we) will notify the City of Miami Beach Building Department of any changes regarding authorized personnel performing inspection services.

I, (we) understand that a Special Inspection Log for each building must be displayed in a convenient location on the site for reference by the City of Miami Beach Building Department Inspector. All mandatory inspections, as required of the Florida Building Code, Inspection performed by the Special inspector hired by the Owner are in addition to the mandatory inspections performed by the Building Department. Further, upon completion of the work under each building permit, I will submit to the Building Inspector at the time of final inspection the completed Inspection Log form and sealed statement that, to the best of my knowledge, belief and professional judgment those portions outlined above meet the intent of the Florida Building Code and are in subsequent accordance with the approved plans.

Signed and Sealed
34396 FL
License Number

Date: 7-24-06

Architect/Engineer Signature: _____
Architect/Engineer Name Printed: SAMUEL LYUBKIN
Address: 2632 Hollywood BLVD #107
Phone Number: (954) 922-8844
Owner/Agent Signature: _____
Owner/Agent Name Printed: ANTHONY LEON
Building Department Accepted By: L. Perez 10/13/07

COPY OF ORIGINAL
Perez

CITY OF MIAMI BEACH
BUILDING DEPARTMENT
1700 CONVENTION CENTER DRIVE
2ND FLOOR - CITY HALL
MIAMI BEACH, FL 33139

NOTICE TO THE CITY OF MIAMI BEACH BUILDING DEPARTMENT OF EMPLOYMENT AS SPECIAL INSPECTOR UNDER THE FLORIDA BUILDING CODE

I, (we) have been retained by: 3Design Inc. Architecture to perform special inspector services under the Florida Building Code at the 1529 Jefferson Avenue project on the below listed structures as of 7-27-06 (date). I am a Professional Engineer or Architect licensed in the State of Florida.

Process Number: B0605108 **Master Permit (IF APPLICABLE):** _____

- ☑ Special Inspector for Pilings, FBC 1822.1.20
- ☑ Special Inspector for Soil Compaction, FBC 1820.3.1
- ○ Special Inspector for Precast Attachments, FBC 1927.12.2 (By P.E. or R.A..)
- ○ Special Inspector for Reinforced Masonry, FBC 2122.4
- ○ Special inspection for Steel Bolted & Welded Connections, FBC 2218.2 (By P.E. or R.A..)
- ○ Special Inspector for Trusses over 35 feet long or 6 feet high, FBC 2319.17.2.4.2 (By P.E. or R. A..)
- ○ Special Inspector for _____

NOTE: Only the marked boxes apply.

The following individual's employed by this firm or me are authorized representatives to perform inspections*

1. Wissam Naamani, P.E.
2. _____
3. _____
4. _____

***NOTE: FBC 2001 HVZ sections 1927.12.2, 2218.2, 2319.17.4.2 requires either a Registered professional Engineer or Registered Architect to perform the actual inspections.**

I, (we) will notify the City of Miami Beach Building Department of any changes regarding authorized personnel performing inspection services.

I, (we) understand that a Special Inspection Log for each building must be displayed in a convenient location on the site for reference by the City of Miami Beach Building Department Inspector. All mandatory inspections, as required of the Florida Building Code, Inspection performed by the Special inspector hired by the Owner are in addition to the mandatory inspections performed by the Building Department. Further more, upon completion of the work under each building permit, I will submit to the Building Inspector at the time of final inspection the completed Inspection Log form and sealed statement that, to the best of my knowledge, belief and professional judgment those portions outlined above meet the intent of the Florida Building Code and are in subsequent accordance with the approved plans.

Architect/Engineer Signature: Wissam 7-27-06

Architect/Engineer Name Printed: Wissam Naamani, P.E.

Address: 750 W. 84 Street, Hialeah, FL 33014

Phone Number: (305) 828-7499

Owner/Agent Signature: ANTHONY LEON

Owner/Agent Name Printed: LPeon 10/3/07

Building Department

COPY OF ORIGINAL LPeon

Wissam

Signed and Sealed

39584

License Number

7-27-06

DYNATECH ENGINEERING CORP.

750 WEST 84TH STREET
HIALEAH, FLORIDA 33014
(305) 828-7499

PERCOLATION TEST ACCORDING TO S.F.W.M.D. D.O.T. STANDARD TEST

DATE	: 8-17-06
CLIENT	: 3DESIGN, INC.
PROJECT	: Proposed Development @
PROJECT LOCATION	: 1529 Jefferson Avenue, Miami Beach, FL.
LOCATION OF TEST	: SAS
DIAMETER OF HOLE	: 7"
TEST NO.	: P-1

TEST DEPTH (feet)	0-10	10-15	15-20	20-15
AVERAGE FLOW (GPM)	N/A	2.6		
AVERAGE K (CFS/Sq. Ft-Ft Head)	N/A	1.72×10^{-4}		

- The above hydraulic conductivity represents an ultimate value. The designer should decide on the required safety factor.

Water Table 3' Below existing ground surface.

SUBSURFACE INVESTIGATION

Depth Below Ground Surface	Soil Description
0'-0" to 0'-6"	Topsoil and grass
0'-6" to 1'-0"	Dark brown fine sand
1'-0" to 2'-0"	Tan beach sand
2'-0" to 3'-0"	Tan silty beach sand
3'-0" to 4'-0"	Gray silt
4'-0" to 6'-0"	Peat
6'-0" to 7'-6"	Gray beach sand w/peat
7'-6" to 15'-0"	Gray beach sand

Respectfully submitted,

Field Tech: AS&LD

Wissam Naamani, P.E.
DYNATECH ENGINEERING CORP.
Florida Reg. No. 39584

As a mutual protection to the clients, the public and ourselves, all reports are submitted as the confidential property of clients, and authorization for publication of statement conclusions or extracts from or regarding our reports is reserved pending on our written approval.

(305) 264-0229

DRAWN BY: NG.

LAND SURVEYORS

SHEET No. 1 OF 2

BOUNDARY SURVEY

SCALE = 1" : 20'

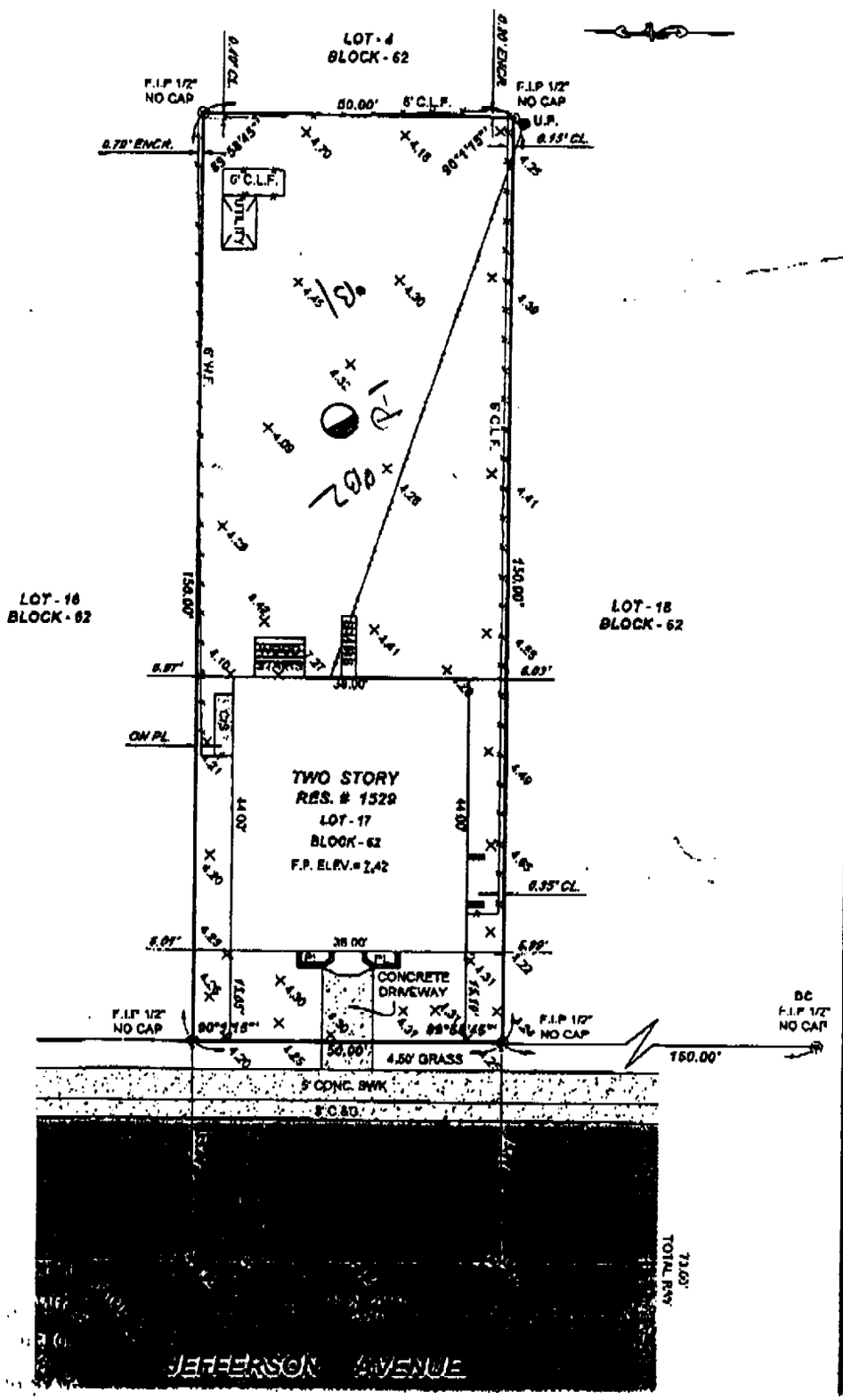

Apr 11 06 05:34p 3Design, Inc. 3055314515 p.2

3DESIGN INC
ARCHITECTURE

August 1, 2007
Project: 1529 Jefferson
Process Number: B0605108

Comments & ***Responses***

Plumbing Section
Assign Date 3/6/2007 Due Date 3/6/2007 Status Date 3/6/2007
Status Time 12:00:00AM Status CO: CO=Correction Notice Record By BUILJANR
Assign To RAJ

Comment B0605108

-Show water and sewer on site plan.
Please see sheet A1.0, water and sewer lines are now shown.

-Need DERM approval for paving and drainage on civil sheets.

-Provide irrigation sheets.
Please see sheets IR1 and IR2, irrigation sheets.

-Provide detail of roof scuppers.
Please see sheet A5.1, overflow scupper and R.W.L. detail.

-Maximum elevation difference between inlet of primary roof drain and weir of scupper is 4".
Please see sheet A3.0 and A3.1, overflow scupper is now 4" above R.W.L. inlet.

Assign Date 5/25/2007 Due Date 5/25/2007 Status Date 5/25/2007
Status Time 12:00:00AM Status CO: CO=Correction Notice Record By BUILZEIJ
Assign To JZ
Comment
Not corrected.
Advised to drop off.

Need to add roof dimensions for drain sizing.
Please see sheet A2.4, vertical leader size chart, drained roof area and roof dimensions.

Drain size is determined by the area to be drained and sized to the tables in the plumbing section.
Please see sheet A2.4, vertical leader size chart and drained roof area.

The overflow scuppers shall also be determined by the sizing table in the FBC, Building.
Please see sheet A2.4, vertical leader size chart, min. leader and overflow scupper diameter.

4300 BISCAYNE BLVD. #G-04 MIAMI, FL 33137
T 305.438.9377 F 305.438.9379

3DESIGN.INC
ARCHITECTURE

Engineering Section
Assign Date 3/6/2007
Due Date 3/6/2007
Status Date 3/6/2007
Status Time 12:00:00AM
Status CO: CO=Correction Notice
Record By BUILPERH
Assign To Hp

Comment
Still Pending:

-Signed and Sealed Elevation Certificate.
Please see enclosed elevation certificate.

-Provide WASA Ordinance 89-95. Compliance Letter.
-Provide MIami-Dade County Impact Fee.
-Provide Public Works Approval.
- Provide Planning and Zoning Approval.

4300 BISCAYNE BLVD. #G-04 MIAMI, FL 33137
T 305.438.9377 F 305.438.9379

B06005108

MIAMI-DADE COUNTY
BUILDING CODE COMPLIANCE OFFICE
PRODUCT CONTROL DIVISION
MIAMI-DADE COUNTY
MIAMI-DADE GLAGLER
140 WEST FLAGLER STREET, SUITE 1603
MIAMI, FLORIDA 33130-1563
(305) 375-2901 FAX (305) 37[illegible]

NOTICE OF ACCEPTANCE (NOA)

Alumistand & Vibra Dama Corp. of America
3350 Burris Road
Fort Lauderdale, Florida 33314

SCOPE:
This NOA is being issued under the applicable rules and regulations governing the use of construction materials. The documentation submitted has been reviewed by Miami-Dade County Product Control Division and accepted by the Board of Rules and Appeals (BORA) to be used in Miami Dade County and other areas where allowed by the Authority Having Jurisdiction (AHJ).

This NOA shall not be valid after the expiration date stated below. The Miami-Dade County Product Control Division (In Miami Dade County) and/or the AHJ (in areas other than Miami Dade County) reserve the right to have this product or material tested for quality assurance purposes. If this product or material fails to perform in the accepted manner, the manufacturer will incur the expense of such testing and the AHJ may immediately revoke, modify, or suspend the use of such product or material within their jurisdiction. BORA reserves the right to revoke this acceptance if it is determined by Miami-Dade County Product Control Division that this product or material fails to meet the requirements of the applicable building code.

This product is approved as described herein, and has been designed to comply with the High Velocity Hurricane Zone of the Florida Building Code.

DESCRIPTION: Aluminum Roof Mounted Stand Frame Support for Air Conditioning Units

APPROVAL DOCUMENT: Drawing No. 00-339, titled " Air Conditioning Stand ", sheets 1 through 3 of 3, prepared by Knezevich & Associates, Inc., dated September 07, 2001, last revision #2 dated May 20, 2002, bearing the Miami-Dade County Product Control Renewal stamp with the Notice of Acceptance number and expiration date by the Miami-Dade County Product Control Division.

MISSILE IMPACT RATING: None

LABELING: Each stand frame shall bear a permanent label with the manufacturer's name or logo, city, state and the following statement: "Miami-Dade County Product Control Approved", unless otherwise noted herein.

RENEWAL of this NOA shall be considered after a renewal application has been filed and there has been no change in the applicable building code negatively affecting the performance of this product.

TERMINATION of this NOA will occur after the expiration date or if there has been a revision or change in the materials, use, and/or manufacture of the product or process. Misuse of this NOA as an endorsement of any product, for sales, advertising or any other purposes shall automatically terminate this NOA. Failure to comply with any section of this NOA shall be cause for termination and removal of NOA.

ADVERTISEMENT: The NOA number preceded by the words Miami-Dade County, Florida and followed by the expiration date may be displayed in advertising literature. If any portion of the NOA is displayed, then it shall be done in its entirety.

INSPECTION: A copy of this entire NOA shall be provided to the user by the manufacturer or its distributors and shall be available for inspection at the job site at the request of the Building Official.

This NOA renews NOA # 02-0401.01 and consists of this page 1 as well as approval document mentioned above. The submitted documentation was reviewed by Helmy A. Makar, P.E.

NOA No 02-0719.03
Expiration Date: 09/05/2007
Approval Date: 09/05/2002
Page 1

NOTICE: In addition to the requirement of this permit there may be additional [illegible] Public [illegible] [illegible] management's [illegible] The City of Miami Beach assumes no responsibility for accuracy of or results from these plans which are approved subject to compliance with all Federal, State, and Local Laws, Rules, and Regulations.

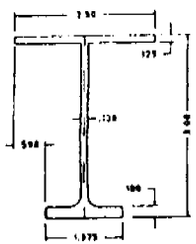

1 RAIL (I-BEAM)
6061-T6 ALUM ALLOY
HALF SIZE

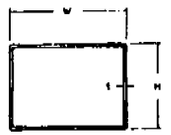

2 RECTANGULAR TUBING
6061-T6 ALUM ALLOY
HALF SIZE

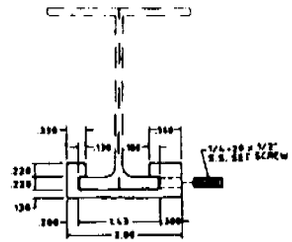

3 C-CHANNEL
6005-T5 ALUM. ALLOY
HALF SIZE

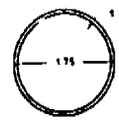

4 ROUND TUBING
6061-T6 ALUM. ALLOY
HALF SIZE

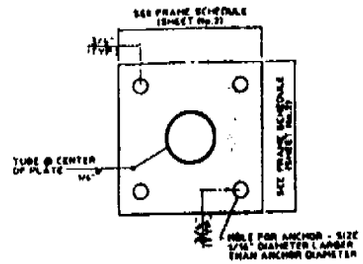

5 BASE PLATE
6061-T6 ALUM ALLOY
SCALE: 3" = 1'-0"

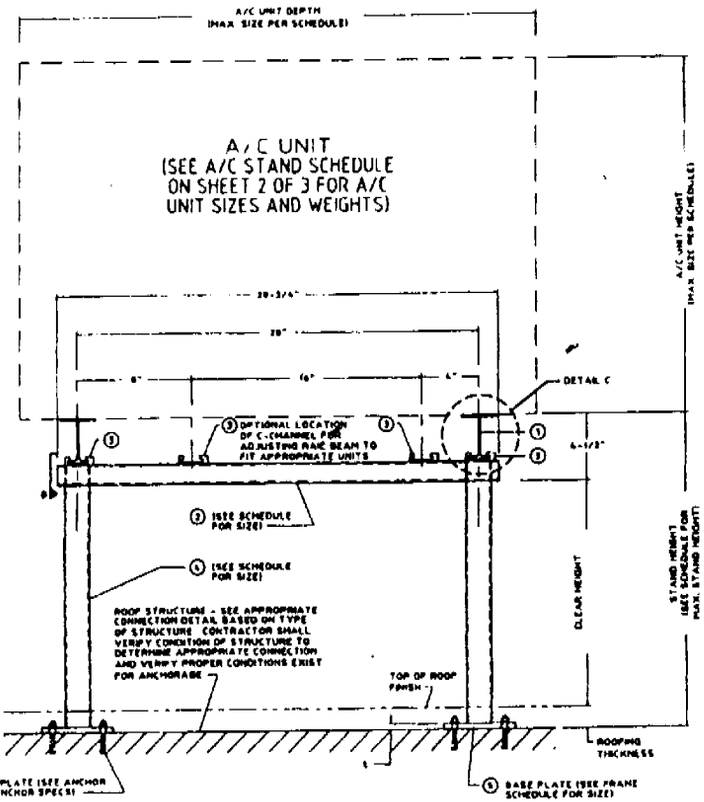

6 ASSEMBLY ELEVATION (END VIEW)

NOTES:

1. THESE A/C STANDS ARE DESIGNED IN ACCORDANCE WITH HIGH VELOCITY HURRICANE ZONE PROVISIONS OF THE FLORIDA BUILDING CODE 2001 EDITION.
2. WIND LOADS ARE BASED UPON ASCE 7-98 USING A BASIC WIND SPEED EQUAL TO 168 MPH, AN IMPORTANCE FACTOR OF 1.0 AND EXPOSURE "C".
3. STANDS SHALL BE INSTALLED WITH A MINIMUM CLEAR HEIGHT IN ACCORDANCE WITH F.B.C. CHAPTER 15, SECTION 1522 AND TABLE 1522.3.
4. ALUMINUM DESIGN IS IN ACCORDANCE WITH THE F.B.C. CHAPTER 20 AND THE ALUMINUM ASSOCIATION SPECIFICATIONS FOR ALUMINUM STRUCTURES.
5. ALUMINUM ALLOYS SHALL BE AS NOTED ON DRAWINGS. ALL WELDING SHALL BE PERFORMED WITH 5556 FILLER ALLOY.
6. A/C CONTRACTOR SHALL PROVIDE VIBRATION ISOLATOR PADS BETWEEN A/C UNIT AND STAND.
7. A FLORIDA REGISTERED ENGINEER SHALL VERIFY CAPACITY OF EXISTING STRUCTURE TO SUPPORT A/C STAND LOADS SHOWN IN FRAME SCHEDULE.

PRODUCT REVIEWED
as complying with the Florida Building Code
Acceptance No. 02-0401.01
Expiration Date 09/05/2007
By
Miami Dade Product Control Division

PRODUCT RENEWED
as complying with the Florida Building Code
Acceptance No. 02-0719.03
Expiration Date 09/05/2007
By
Miami Dade Product Control Division

KA

KNEZEVICH & ASSOCIATES, INC
CONSULTING ENGINEERS • PRODUCT TESTING
1200 N. UNIVERSITY DRIVE, SUITE 100 • FORT LAUDERDALE, FL 33322
TEL (954) 382-3660 • FAX (954) 382-3688 • FLORIDA COA #3282
WEBSITE: WWW.KNEZEVICH.COM • EMAIL: KA@KNEZEVICH.COM
COPYRIGHT © 2001 KNEZEVICH & ASSOCIATES, INC

AIR CONDITIONING STAND

ADDITIONS & ALTERATIONS TO 2220 BARRIE ROAD, FT. LAUDERDALE, FL. 33316
FOR CORPORATION OF AMERICA
(954) 563-6886
(888) 864-7262

V.J. KNEZEVICH
FL License No: PE 0018983
MAY 20 2002

date	09/07/01
scale as noted	drawn by AV
design by VJK	checked by VJK
drawing no	00-339
sheet	1 of 3

05/20/02 12:14

A/C STAND SCHEDULE

STAND No	A/C UNIT H x W x D (MAX SIZES)	MAX. DESIGN WIND LOAD (PSF)	MAX. ROOF HEIGHT	FRAME TYPE	MAX. STAND HT	UNIT WEIGHT (#)	NOTE
1	17" x 24" x 34"	78.6	110'	C	22.5"	200	
1A	17" x 24" x 34"	85.5	175'	C	24"	200	ONE UNIT TWO FRAMES
2	26.5" x 24" x 36"	85.7	175'	B	29"	200	
		58.5	33'	A	25"	200	
3	26.5" x 24" x 24"	85.7	175'	B	29"	200	
		71.0	70'	A	19"	200	
		58.5	33'	A	25"	200	
4	24" x 24" x 24"	68.5	60'	C	18.5"	200	
		78.6	110'	D	18.5"	200	
4A	24" x 24" x 24"	85.5	175'	C	24"	200	ONE UNIT TWO FRAMES
5	28.5" x 31" x 36"	71.0	70'	B	23"	200	
		58.5	33'	B	31"	200	
6	40" x 40" x 40"	58.5	33'	B	29"	200	
7	40" x 80" x 40"	58.5	33'	B	29"	1600.0 (MAX.)	4 FRAMES REQUIRED EQUALLY SPACED ∆ or ⊥ 1 UNIT ONLY

ANCHOR SCHEDULE

FRAME TYPE	EXISTING STRUCTURE	ANCHOR-TYPE
A	CONCRETE	3/8"Ø RAWL LOK/BOLT SLEEVE ANCHOR W/ 1-5/8" MIN. EMBEDMENT IN CONCRETE & 3" MIN. EDGE DISTANCE.
B	CONCRETE	1/2"Ø RAWL LOK/BOLT SLEEVE ANCHOR W/ 2-1/4" MIN. EMBEDMENT IN CONCRETE & 3" MIN. EDGE DISTANCE.
A & B	WOOD	3/8"Ø S.S. LAG SCREW W/ 3-1/2" MIN. PENETRATION IN WOOD FRAMING BEYOND PLYWOOD & MIN. 1" EDGE DISTANCE.
A & B	STEEL	3/8"Ø A307 GALVANIZED BOLT W/ NUT & WASHER FASTEN DIRECTLY TO EXISTING STEEL MEMBERS, NOT THRU METAL DECK OR ROOFING
C & D	CONCRETE	FOUR 5/16"Ø POWERS/ RAWL LOK BOLTS W/ 1- 1/2" EMBEDMENT IN CONCRETE AND 3-3/4" MIN. EDGE DISTANCE.
C & D	WOOD	FOUR 3/8"Ø S.S. LAG SCREW W/ 2" MIN. PENETRATION IN WOOD FRAMING BEYOND PLYWOOD & MIN. 1" EDGE DISTANCE.
C & D	STEEL	FOUR #12- 14 ITW BUILDEX TEKS-SELF DRILLING FASTENERS WITH BONDED WASHER. FASTEN DIRECTLY TO EXISTING STEEL MEMBERS, NOT THRU METAL DECK OR ROOFING.

NOTE: A FLORIDA REGISTERED ENGINEER SHALL VERIFY THAT THE EXISTING STRUCTURE IS CAPABLE OF RESISTING THE LOADS IMPOSED SHOWN IN THE FRAME SCHEDULE. DO NOT ATTACH TO STEEL JOISTS W/O COORDINATING W/ JOIST MANUFACTURER OR APPROVAL OF PROFESSIONAL ENGINEER.

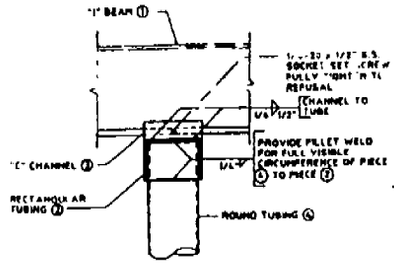

B FRAME ASSEMBLY DETAIL
SCALE: 3" = 1'-0"

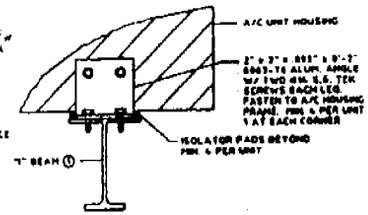

C A/C UNIT TIE-DOWN DETAIL
SCALE: 3" = 1'-0"

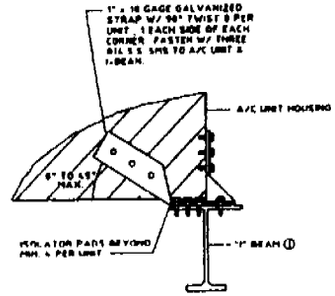

D ALT. A/C UNIT TIE-DOWN DETAIL
SCALE: 3" = 1'-0"

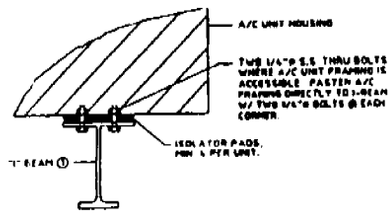

E ALT. A/C UNIT TIE-DOWN DETAIL
SCALE: 3" = 1'-0"

FRAME SCHEDULE

FRAME TYPE	④ POST SIZE OD	POST SIZE t	② TUBE SIZE W x H x t	⑤ BASE PLATE SIZE	SUPPORT REACTIONS T (#)	V (#)	C (#)
A	1.75"	0.065"	2.03" x 1.4" x .050"	5" x 5" x 5/16"	362	157	562
B	1.75"	0.110"	2.03" x 1.4" x .075"	5" x 5" x 3/8"	501	218	781
C	1.75"	0.065"	2.03" x 1.4" x .050"	4" x 4" x 1/4"	271	171	329
D	1.75"	0.110"	2.03" x 1.4" x .075"	4" x 4" x 1/4"	332	196	588

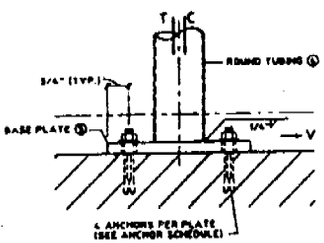

P BASE PLATE REACTION DIAGRAM (SEE FRAME SCHEDULE)
SCALE: 3" = 1'-0"

FBC DUCT RENEWED
as complying with the Florida Building Code
Acceptance No. 02-0719.03
Expiration Date 09/05/2007
By: Miami Dade Product Control Division

PRODUCT REVISED
as complying with the Florida Building Code
Acceptance No. 02-0401.01
Expiration Date 09/05/2002
By: Miami Dade Product Control Division

KNEZEVICH & ASSOCIATES, INC.
CONSULTING ENGINEERS - PRODUCT TESTING
7300 N. UNIVERSITY DRIVE, SUITE 100 - POST LAUDERDALE, FL. 33321
TEL. (954) 721-3660 - FAX (954) 722-2990 - FLORIDA CA #3281
WEBSITE: WWW.KNEZEVICH.COM - E-MAIL: KA@KNEZEVICH.COM
COPYRIGHT © 2001 KNEZEVICH & ASSOCIATES, INC.

AIR CONDITIONING STAND
ALLSTATE'S A/C
VISTA-SHOP CORPORATION OF AMERICA
2329 INVERRARY BLVD. FT. LAUDERDALE, FL. 33341
(954) 484-7928

V.J. KNEZEVICH
FL License No: PE 0070983

rev	description	date
1	ADDED FRAME TYPE "D"	05/20/02
2	ADDED NOTE	06/07/02
3	ADDED FRAME TYPE "D"	08/07/02

date: 08/07/02
scale: AS NOTED
drawn by: AJ
design by: AJ
checked by: VJK
drawing no: 00-339
sheet 2 of 3

05/20/02 12:16

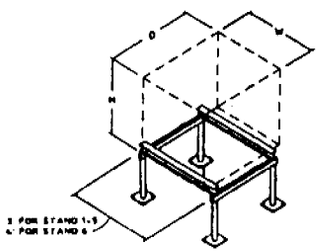

ONE UNIT SYSTEM (ISOMETRIC)
SCALE: 1/-1/2" = 1'-0"
STAND 1, 1A, 2, 3, 4, 4A, 5 OR 6

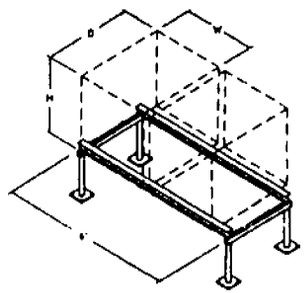

TWO UNIT SYSTEM (ISOMETRIC)
SCALE: 1/-1/2" = 1'-0"
STAND 1, 1A, 2, 3, 4, 4A OR 5

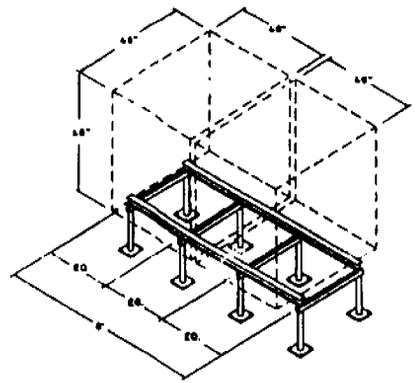

TWO UNIT SYSTEM (ISOMETRIC)
SCALE: 1/-1/2" = 1'-0"
STAND 6

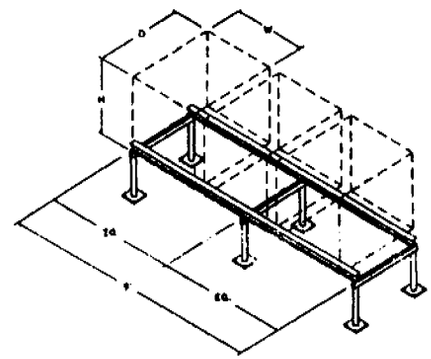

THREE UNIT SYSTEM (ISOMETRIC)
SCALE: 1/-1/2" = 1'-0"
STAND 1, 1A, 2, 3, 4, 4A OR 5

PRODUCT RENEWED
as complying with the Florida
Building Code
Acceptance No. 02-0719.03
Expiration Date 09/05/2007
By [signature]
Miami Dade Product Control
Division

PRODUCT REVISED
as complying with the Florida
Building Code
Acceptance No. 02-0401.01
Expiration Date 09/05/2002
By [signature]
Miami Dade Product Control
Division

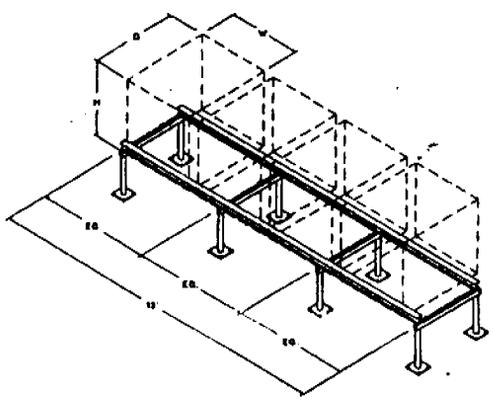

FOUR UNIT SYSTEM (ISOMETRIC)
SCALE: 1/-1/2" = 1'-0"
STAND 1, 1A, 2, 3, 4, 4A OR 5

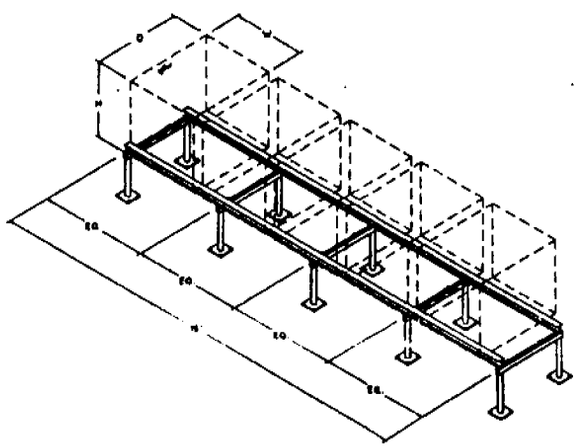

FIVE UNIT SYSTEM (ISOMETRIC)
SCALE: 1/-1/2" = 1'-0"
STAND 1, 1A, 2, 3, 4, 4A OR 5

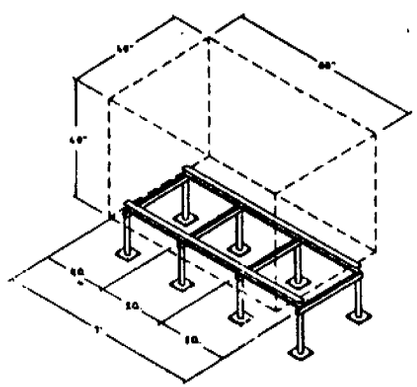

ONE UNIT SYSTEM (ISOMETRIC)
SCALE: 1/-1/2" = 1'-0"
STAND 7

KNEZEVICH & ASSOCIATES, INC.
CONSULTING ENGINEERS • PRODUCT TESTING

AIR CONDITIONING STAND

V.J. KNEZEVICH
PROFESSIONAL ENGINEER
Fl. License No:
PE 0018983

revisions

1			
2			
3			

date 09/07/01
scale AS NOTED
drawn by AV
design by JS
checked by VJK
drawing no. 00-339
sheet 3 of 3

05/20/02 12:16

U.S. DEPARTMENT OF HOMELAND SECURITY
Federal Emergency Management Agency
National Flood Insurance Program

ELEVATION CERTIFICATE

OMB No. 1660-0008
Expires February 28, 2009

Important: Read the instructions on pages 1-8.

SECTION A - PROPERTY INFORMATION

For Insurance Company Use:
Policy Number
Company NAIC Number

A1. Building Owner's Name MICHAEL BENHAMOU

A2. Building Street Address (including Apt., Unit, Suite, and/or Bldg. No.) or P.O. Route and Box No.
1327 JEFFERSON AVE

City MIAMI BEACH State FL ZIP Code 33139

A3. Property Description (Lot and Block Numbers, Tax Parcel Number, Legal Description, etc.)
LOT 17 BLK 62 LINCOLN SUBDIVISION PB 7 PG 7

A4. Building Use (e.g., Residential, Non-Residential, Addition, Accessory, etc.) RESIDENTIAL

A5. Latitude/Longitude: Lat. ____ Long. ____ Horizontal Datum: ☐ NAD 1927 ☐ NAD 1983

A6. Attach at least 2 photographs of the building if the Certificate is being used to obtain flood insurance.

A7. Building Diagram Number 1

A8. For a building with a crawl space or enclosure(s), provide
a) Square footage of crawl space or enclosure(s) 1,565 sq ft
b) No. of permanent flood openings in the crawl space or enclosure(s) walls within 1.0 foot above adjacent grade 30
c) Total net area of flood openings in A8.b 1,650 sq in

A9. For a building with an attached garage, provide:
a) Square footage of attached garage N/A sq ft
b) No. of permanent flood openings in the attached garage walls within 1.0 foot above adjacent grade ____
c) Total net area of flood openings in A9.b ____ sq in

SECTION B - FLOOD INSURANCE RATE MAP (FIRM) INFORMATION

B1. NFIP Community Name & Community Number	B2. County Name	B3. State

B4. Map/Panel Number	B5. Suffix	B6. FIRM Index Date	B7. FIRM Panel Effective/Revised Date	B8. Flood Zone(s)	B9. Base Flood Elevation(s) (Zone AO, use base flood depth)
				AE8	8.0'

B10. Indicate the source of the Base Flood Elevation (BFE) data or base flood depth entered in Item B9.
☐ FIS Profile ☐ FIRM ☐ Community Determined ☐ Other (Describe) ____

B11. Indicate elevation datum used for BFE in Item B9: ☒ NGVD 1929 ☐ NAVD 1988 ☐ Other (Describe) ____

B12. Is the building located in a Coastal Barrier Resources System (CBRS) area or Otherwise Protected Area (OPA)? ☐ Yes ☐ No
Designation Date ____ ☐ CBRS ☐ OPA

SECTION C - BUILDING ELEVATION INFORMATION (SURVEY REQUIRED)

C1. Building elevations are based on: ☒ Construction Drawings* ☐ Building Under Construction* ☐ Finished Construction
*A new Elevation Certificate will be required when construction of the building is complete.

C2. Elevations – Zones A1-A30, AE, AH, A (with BFE), VE, V1-V30, V (with BFE), AR, AR/A, AR/AE, AR/A1-A30, AR/AH, AR/AO. Complete Items C2.a-g below according to the building diagram specified in Item A7.
Benchmark Utilized ____ Vertical Datum ____
Conversion/Comments ____

		Check the measurement used.	
a) Top of bottom floor (including basement, crawl space, or enclosure floor)	8.0	☑ feet	☐ meters (Puerto Rico only)
b) Top of the next higher floor	18.0	☑ feet	☐ meters (Puerto Rico only)
c) Bottom of the lowest horizontal structural member (V Zones only)		☐ feet	☐ meters (Puerto Rico only)
d) Attached garage (top of slab)	N/A	☐ feet	☐ meters (Puerto Rico only)
e) Lowest elevation of machinery or equipment servicing the building (Describe type of equipment in Comments)	8.0	☑ feet	☐ meters (Puerto Rico only)
f) Lowest adjacent (finished) grade (LAG)	4.0	☑ feet	☐ meters (Puerto Rico only)
g) Highest adjacent (finished) grade (HAG)	4.2	☑ feet	☐ meters (Puerto Rico only)

SECTION D - SURVEYOR, ENGINEER, OR ARCHITECT CERTIFICATION

This certification is to be signed and sealed by a land surveyor, engineer, or architect authorized by law to certify elevation information. *I certify that the information on this Certificate represents my best efforts to interpret the data available. I understand that any false statement may be punishable by fine or imprisonment under 18 U.S. Code, Section 1001.*

☐ Check here if comments are provided on back of form.

ANTHONY LEON, AIA — AR 0016702
Certifier's Name — License Number

PRESIDENT — 3 DESIGN, INC.
Title — Company Name

4300 BISCAYNE BLVD #604 - MIAMI — FL — 33137
Address — City — State — ZIP Code

Signature — Date 04/10/07 — Telephone 305 438 1377

IMPORTANT: In these spaces, copy the corresponding information from Section A.	For Insurance Company Use:
Building Street Address (including Apt., Unit, Suite, and/or Bldg. No.) or P.O. Route and Box No.	Policy Number
City State ZIP Code	Company NAIC Number

SECTION D - SURVEYOR, ENGINEER, OR ARCHITECT CERTIFICATION (CONTINUED)

Copy both sides of this Elevation Certificate for (1) community official, (2) insurance agent/company, and (3) building owner.

Comments

Signature Date ☐ Check here if attachments

SECTION E - BUILDING ELEVATION INFORMATION (SURVEY NOT REQUIRED) FOR ZONE AO AND ZONE A (WITHOUT BFE)

For Zones AO and A (without BFE), complete Items E1-E5. If the Certificate is intended to support a LOMA or LOMR-F request, complete Sections A, B, and C. For Items E1-E4, use natural grade, if available. Check the measurement used. In Puerto Rico only, enter meters.

E1. Provide elevation information for the following and check the appropriate boxes to show whether the elevation is above or below the highest adjacent grade (HAG) and the lowest adjacent grade (LAG).
a) Top of bottom floor (including basement, crawl space, or enclosure) is _____.____ ☐ feet ☐ meters ☐ above or ☐ below the HAG.
b) Top of bottom floor (including basement, crawl space, or enclosure) is _____.____ ☐ feet ☐ meters ☐ above or ☐ below the LAG.

E2. For Building Diagrams 6-8 with permanent flood openings provided in Section A Items 8 and/or 9 (see page 8 of Instructions), the next higher floor (elevation C2.b in the diagrams) of the building is _____.____ ☐ feet ☐ meters ☐ above or ☐ below the HAG.

E3. Attached garage (top of slab) is _____.____ ☐ feet ☐ meters ☐ above or ☐ below the HAG.

E4. Top of platform of machinery and/or equipment servicing the building is _____.____ ☐ feet ☐ meters ☐ above or ☐ below the HAG.

E5. Zone AO only: If no flood depth number is available, is the top of the bottom floor elevated in accordance with the community's floodplain management ordinance? ☐ Yes ☐ No ☐ Unknown. The local official must certify this information in Section G.

SECTION F - PROPERTY OWNER (OR OWNER'S REPRESENTATIVE) CERTIFICATION

The property owner or owner's authorized representative who completes Sections A, B, and E for Zone A (without a FEMA-issued or community-issued BFE) or Zone AO must sign here. *The statements in Sections A, B, and E are correct to the best of my knowledge.*

Property Owner's or Owner's Authorized Representative's Name

Address City State ZIP Code

Signature Date Telephone

Comments

☐ Check here if attachments

SECTION G - COMMUNITY INFORMATION (OPTIONAL)

The local official who is authorized by law or ordinance to administer the community's floodplain management ordinance can complete Sections A, B, C (or E), and G of this Elevation Certificate. Complete the applicable item(s) and sign below. Check the measurement used in Items G8. and G9.

G1. ☐ The information in Section C was taken from other documentation that has been signed and sealed by a licensed surveyor, engineer, or architect who is authorized by law to certify elevation information. (Indicate the source and date of the elevation data in the Comments area below.)

G2. ☐ A community official completed Section E for a building located in Zone A (without a FEMA-issued or community-issued BFE) or Zone AO.

G3. ☐ The following information (Items G4.-G9.) is provided for community floodplain management purposes.

G4. Permit Number	G5. Date Permit Issued	G6. Date Certificate Of Compliance/Occupancy Issued

G7. This permit has been issued for: ☐ New Construction ☐ Substantial Improvement

G8. Elevation of as-built lowest floor (including basement) of the building: _____.____ ☐ feet ☐ meters (PR) Datum _____

G9. BFE or (in Zone AO) depth of flooding at the building site: _____.____ ☐ feet ☐ meters (PR) Datum _____

Local Official's Name Title

Community Name Telephone

Signature Date

Comments

☐ Check here if attachments

FORM 600A-2004 EnergyGauge® 4.0

FLORIDA ENERGY EFFICIENCY CODE FOR BUILDING CONSTRUCTION

Florida Department of Community Affairs

Residential Whole Building Performance Method A

Project Name:	1529 JEFFERSON AVE S SIDE	Builder:	
Address:	1529 JEFFERSON AVE	Permitting Office:	MIAMI BEACH
City, State:	MIAMI BEACH, FL 33139-	Permit Number:	
Owner:		Jurisdiction Number:	232500
Climate Zone:	South		

1. New construction or existing	New	12. Cooling systems	
2. Single family or multi-family	Multi-family	a. Central Unit	Cap: 24.0 kBtu/hr
3. Number of units, if multi-family	3		SEER: 13.00
4. Number of Bedrooms	1	b. N/A	
5. Is this a worst case?	Yes	c. N/A	
6. Conditioned floor area (ft²)	908 ft²	13. Heating systems	
7. Glass type[1] and area: (Label reqd. by 13-104.4.5 if not default)		a. Electric Strip	Cap: 19.0 kBtu/hr
a. U-factor: (or Single or Double DEFAULT)	Description Area 7a (Sngle Default) 74.0 ft²		COP: 1.00
b. SHGC: (or Clear or Tint DEFAULT)	7b. (Clear) 127.0 ft²	b. N/A	
8. Floor types		c. N/A	
a. Slab-On-Grade Edge Insulation	R=0.0, 148.0(p) ft	14. Hot water systems	
b. N/A		a. Electric Resistance	Cap: 40.0 gallons
c. N/A			EF: 0.92
9. Wall types		b. N/A	
a. Concrete, Int Insul, Exterior	R=4.2, 862.0 ft²	c. Conservation credits (HR-Heat recovery, Solar DHP-Dedicated heat pump)	
b. N/A		15. HVAC credits (CF-Ceiling fan, CV-Cross ventilation, HF-Whole house fan, PT-Programmable Thermostat, MZ-C-Multizone cooling, MZ-H-Multizone heating)	PT,
c. N/A			
d. N/A			
e. N/A			
10. Ceiling types			
a. Single Assembly	R=19.0, 908.0 ft²		
b. N/A			
c. N/A			
11. Ducts			
a. Sup: Con. Ret: Con. AH(Sealed):Interior	Sup. R=6.0, 30.0 ft		
b. N/A			

Glass/Floor Area: 0.14

Total as-built points: 11779
Total base points: 13104

PASS

I hereby certify that the plans and specifications covered by this calculation are in compliance with the Florida Energy Code.

PREPARED BY: _____

DATE: 6-9-06

I hereby certify that this building, as designed, is in compliance with the Florida Energy Code.

OWNER/AGENT: _____

DATE: _____

Review of the plans and specifications covered by this calculation indicates compliance with the Florida Energy Code. Before construction is completed this building will be inspected for compliance with Section 553.908 Florida Statutes.

BUILDING OFFICIAL: _____

DATE: _____

1 Predominant glass type. For actual glass type and areas, see Summer & Winter Glass output on pages 2&4.

FLORIDA ENERGY EFFICIENCY CODE FOR BUILDING CONSTRUCTION

Florida Department of Community Affairs

Residential Whole Building Performance Method A

Project Name:	**1529 JEFFERSON AVE S SIDE**	Builder:	
Address:	**1529 JEFFERSON AVE**	Permitting Office:	**MIAMI BEACH**
City, State:	**MIAMI BEACH, FL 33139-**	Permit Number:	
Owner:		Jurisdiction Number:	**232500**
Climate Zone:	**South**		

1.	New construction or existing	New	
2.	Single family or multi-family	Multi-family	
3.	Number of units, if multi-family	3	
4.	Number of Bedrooms	1	
5.	Is this a worst case?	Yes	
6.	Conditioned floor area (ft²)	908 ft²	
7.	Glass type[1] and area: (Label reqd. by 13-104.4.5 if not default)		
a.	U-factor: (or Single or Double DEFAULT)	7a. Description (Sngle Default)	Area 74.0 ft²
b.	SHGC: (or Clear or Tint DEFAULT)	7b. (Clear)	127.0 ft²
8.	Floor types		
a.	Slab-On-Grade Edge Insulation	R=0.0, 148.0(p) ft	
b.	N/A		
c.	N/A		
9.	Wall types		
a.	Concrete, Int Insul, Exterior	R=4.2, 862.0 ft²	
b.	N/A		
c.	N/A		
d.	N/A		
e.	N/A		
10.	Ceiling types		
a.	Single Assembly	R=19.0, 908.0 ft²	
b.	N/A		
c.	N/A		
11.	Ducts		
a.	Sup: Con. Ret: Con. AH(Sealed):Interior	Sup. R=6.0, 30.0 ft	
b.	N/A		

12.	Cooling systems		
a.	Central Unit	Cap: 24.0 kBtu/hr SEER: 13.00	
b.	N/A		
c.	N/A		
13.	Heating systems		
a.	Electric Strip	Cap: 19.0 kBtu/hr COP: 1.00	
b.	N/A		
c.	N/A		
14.	Hot water systems		
a.	Electric Resistance	Cap: 40.0 gallons EF: 0.92	
b.	N/A		
c.	Conservation credits (HR-Heat recovery, Solar DHP-Dedicated heat pump)		
15.	HVAC credits (CF-Ceiling fan, CV-Cross ventilation, HF-Whole house fan, PT-Programmable Thermostat, MZ-C-Multizone cooling, MZ-H-Multizone heating)	PT.	

Glass/Floor Area: 0.14

Total as-built points: 11779
Total base points: 13104

PASS

I hereby certify that the plans and specifications covered by this calculation are in compliance with the Florida Energy Code.

PREPARED BY: _____

DATE: 6-9-06

I hereby certify that this building, as designed, is in compliance with the Florida Energy Code.

OWNER/AGENT: _____

DATE: _____

Review of the plans and specifications covered by this calculation indicates compliance with the Florida Energy Code. Before construction is completed this building will be inspected for compliance with Section 553.908 Florida Statutes.

BUILDING OFFICIAL: _____

DATE: _____

1 Predominant glass type. For actual glass type and areas, see Summer & Winter Glass output on pages 2&4.

SUMMER CALCULATIONS

Residential Whole Building Performance Method A - Details

ADDRESS: **1529 JEFFERSON AVE, MIAMI BEACH, FL, 33139-** PERMIT #:

BASE				AS-BUILT							
GLASS TYPES .18 X Conditioned Floor Area	X BSPM	= Points		Type/SC	Overhang Ornt	Len	Hgt	Area X	SPM X	SOF	= Points
.18	908.0	32.50	5311.8	Single, Clear	SW	0.0	0.0	74.0	73.41	1.00	5432.2
				Single, Clear	SE	0.0	0.0	4.0	79.81	1.00	319.3
				Single, Clear	SE	3.0	9.0	49.0	79.81	0.82	3219.6
				As-Built Total:				**127.0**			**8971.1**
WALL TYPES	Area X	BSPM =	Points	Type			R-Value	Area X	SPM =		Points
Adjacent	0.0	0.00	0.0	Concrete, Int Insul, Exterior			4.2	862.0	2.28		1965.4
Exterior	862.0	2.70	2327.4								
Base Total:	**862.0**		**2327.4**	**As-Built Total:**				**862.0**			**1965.4**
DOOR TYPES	Area X	BSPM =	Points	Type				Area X	SPM =		Points
Adjacent	0.0	0.00	0.0	Exterior Insulated				20.0	6.40		128.0
Exterior	20.0	6.40	128.0								
Base Total:	**20.0**		**128.0**	**As-Built Total:**				**20.0**			**128.0**
CEILING TYPES	Area X	BSPM =	Points	Type			R-Value	Area X	SPM X SCM =		Points
Under Attic	908.0	2.80	2542.4	Single Assembly			19.0	908.0	9.24 X 1.00		8389.9
Base Total:	**908.0**		**2542.4**	**As-Built Total:**				**908.0**			**8389.9**
FLOOR TYPES	Area X	BSPM =	Points	Type			R-Value	Area X	SPM =		Points
Slab	148.0(p)	-20.0	-2960.0	Slab-On-Grade Edge Insulation			0.0	148.0(p	-20.00		-2960.0
Raised	0.0	0.00	0.0								
Base Total:			**-2960.0**	**As-Built Total:**				**148.0**			**-2960.0**
INFILTRATION	Area X	BSPM =	Points					Area X	SPM =		Points
	908.0	18.79	17061.3					908.0	18.79		17061.3

SUMMER CALCULATIONS

Residential Whole Building Performance Method A - Details

ADDRESS: **1529 JEFFERSON AVE, MIAMI BEACH, FL, 33139-** PERMIT #:

BASE			AS-BUILT					
Summer Base Points: 24410.9			**Summer As-Built Points:**					**33555.7**
Total Summer Points	X System Multiplier	= Cooling Points	Total Component (System - Points)	X Cap Ratio	X Duct Multiplier (DM x DSM x AHU)	X System Multiplier	X Credit Multiplier	= Cooling Points
			(sys 1: Central Unit 24000 btuh ,SEER/EFF(13.0) Ducts:Con(S),Con(R),Int(AH),R6.0(INS)					
			33556	1.00	(1.00 x 1.165 x 0.85)	0.262	0.950	8329.0
24410.9	**0.4266**	**10413.7**	**33555.7**	**1.00**	**0.996**	**0.262**	**0.950**	**8329.0**

WINTER CALCULATIONS

Residential Whole Building Performance Method A - Details

ADDRESS: **1529 JEFFERSON AVE, MIAMI BEACH, FL, 33139-** PERMIT #:

BASE				AS-BUILT							
GLASS TYPES .18 X Conditioned Floor Area	X BWPM	= Points		Type/SC	Overhang Ornt	Len	Hgt	Area X	WPM X	WOF	= Points
.18	908.0	2.36	385.7	Single, Clear	SW	0.0	0.0	74.0	5.06	1.00	374.1
				Single, Clear	SE	0.0	0.0	4.0	4.22	1.00	16.9
				Single, Clear	SE	3.0	9.0	49.0	4.22	1.06	219.4
				As-Built Total:				**127.0**			**610.4**
WALL TYPES	Area X	BWPM =	Points	Type			R-Value	Area X	WPM =		Points
Adjacent	0.0	0.00	0.0	Concrete, Int Insul, Exterior			4.2	862.0	1.02		879.2
Exterior	862.0	0.60	517.2								
Base Total:	**862.0**		**517.2**	**As-Built Total:**				**862.0**			**879.2**
DOOR TYPES	Area X	BWPM =	Points	Type				Area X	WPM =		Points
Adjacent	0.0	0.00	0.0	Exterior Insulated				20.0	1.80		36.0
Exterior	20.0	1.80	36.0								
Base Total:	**20.0**		**36.0**	**As-Built Total:**				**20.0**			**36.0**
CEILING TYPES	Area X	BWPM =	Points	Type			R-Value	Area X	WPM X WCM =		Points
Under Attic	908.0	0.10	90.8	Single Assembly			19.0	908.0	0.11 X 1.00		99.9
Base Total:	**908.0**		**90.8**	**As-Built Total:**				**908.0**			**99.9**
FLOOR TYPES	Area X	BWPM =	Points	Type			R-Value	Area X	WPM =		Points
Slab	148.0(p)	-2.1	-310.8	Slab-On-Grade Edge Insulation			0.0	148.0(p	-2.10		-310.8
Raised	0.0	0.00	0.0								
Base Total:			**-310.8**	**As-Built Total:**				**148.0**			**-310.8**
INFILTRATION	Area X	BWPM =	Points					Area X	WPM =		Points
	908.0	-0.06	-54.5					908.0	-0.06		-54.5

WINTER CALCULATIONS

Residential Whole Building Performance Method A - Details

ADDRESS: **1529 JEFFERSON AVE, MIAMI BEACH, FL, 33139-** PERMIT #:

BASE			AS-BUILT					
Winter Base Points:		**664.4**	**Winter As-Built Points:**					**1260.2**
Total Winter Points	X System Multiplier	= Heating Points	Total Component (System - Points)	X Cap Ratio	X Duct Multiplier (DM x DSM x AHU)	X System Multiplier	X Credit Multiplier	= Heating Points
			(sys 1: Electric Strip 19000 btuh ,EFF(1.0) Ducts:Con(S),Con(R),Int(AH),R6.0					
			1260.2	1.000	(1.000 x 1.137 x 0.86)	1.000	0.950	1176.8
664.4	**0.6274**	**416.9**	**1260.2**	**1.00**	**0.983**	**1.000**	**0.950**	**1176.8**

WATER HEATING & CODE COMPLIANCE STATUS

Residential Whole Building Performance Method A - Details

ADDRESS: **1529 JEFFERSON AVE, MIAMI BEACH, FL, 33139-** PERMIT #:

BASE			AS-BUILT						
WATER HEATING Number of Bedrooms	X Multiplier	= Total	Tank Volume	EF	Number of Bedrooms	X Tank Ratio	X Multiplier	X Credit Multiplier	= Total
1	2273.00	2273.0	40.0	0.92	1	1.00	2273.00	1.00	2273.0
			As-Built Total:						**2273.0**

CODE COMPLIANCE STATUS

BASE				AS-BUILT			
Cooling Points	+ Heating Points	+ Hot Water Points	= Total Points	Cooling Points	+ Heating Points	+ Hot Water Points	= Total Points
10414	**417**	**2273**	**13104**	**8329**	**1177**	**2273**	**11773**

PASS

Code Compliance Checklist

Residential Whole Building Performance Method A - Details

ADDRESS: **1529 JEFFERSON AVE, MIAMI BEACH, FL, 33139-** PERMIT #:

6A-21 INFILTRATION REDUCTION COMPLIANCE CHECKLIST

COMPONENTS	SECTION	REQUIREMENTS FOR EACH PRACTICE	CHECK
Exterior Windows & Doors	606.1.ABC.1.1	Maximum:.3 cfm/sq.ft. window area; .5 cfm/sq.ft. door area.	✓
Exterior & Adjacent Walls	606.1.ABC.1.2.1	Caulk, gasket, weatherstrip or seal between: windows/doors & frames, surrounding wall; foundation & wall sole or sill plate; joints between exterior wall panels at corners; utility penetrations; between wall panels & top/bottom plates; between walls and floor. EXCEPTION: Frame walls where a continuous infiltration barrier is installed that extends from, and is sealed to, the foundation to the top plate.	✓
Floors	606.1.ABC.1.2.2	Penetrations/openings >1/8" sealed unless backed by truss or joint members. EXCEPTION: Frame floors where a continuous infiltration barrier is installed that is sealed to the perimeter, penetrations and seams.	✓
Ceilings	606.1.ABC.1.2.3	Between walls & ceilings; penetrations of ceiling plane of top floor; around shafts, chases, soffits, chimneys, cabinets sealed to continuous air barrier; gaps in gyp board & top plate; attic access. EXCEPTION: Frame ceilings where a continuous infiltration barrier is installed that is sealed at the perimeter, at penetrations and seams.	✓
Recessed Lighting Fixtures	606.1.ABC.1.2.4	Type IC rated with no penetrations, sealed; or Type IC or non-IC rated, installed inside a sealed box with 1/2" clearance & 3" from insulation; or Type IC rated with < 2.0 cfm from conditioned space, tested.	N/A
Multi-story Houses	606.1.ABC.1.2.5	Air barrier on perimeter of floor cavity between floors.	✓
Additional Infiltration reqts	606.1.ABC.1.3	Exhaust fans vented to outdoors, dampers; combustion space heaters comply with NFPA, have combustion air.	✓

6A-22 OTHER PRESCRIPTIVE MEASURES (must be met or exceeded by all residences.)

COMPONENTS	SECTION	REQUIREMENTS	CHECK
Water Heaters	612.1	Comply with efficiency requirements in Table 612.1.ABC.3.2. Switch or clearly marked cir breaker (electric) or cutoff (gas) must be provided. External or built-in heat trap required.	✓
Swimming Pools & Spas	612.1	Spas & heated pools must have covers (except solar heated). Non-commercial pools must have a pump timer. Gas spa & pool heaters must have a minimum thermal efficiency of 78%.	✓
Shower heads	612.1	Water flow must be restricted to no more than 2.5 gallons per minute at 80 PSIG.	✓
Air Distribution Systems	610.1	All ducts, fittings, mechanical equipment and plenum chambers shall be mechanically attached, sealed, insulated, and installed in accordance with the criteria of Section 610. Ducts in unconditioned attics: R-6 min. insulation.	✓
HVAC Controls	607.1	Separate readily accessible manual or automatic thermostat for each system.	✓
Insulation	604.1, 602.1	Ceilings-Min. R-19. Common walls-Frame R-11 or CBS R-3 both sides. Common ceiling & floors R-11.	✓

ENERGY PERFORMANCE LEVEL (EPL) DISPLAY CARD

ESTIMATED ENERGY PERFORMANCE SCORE* = 85.4

The higher the score, the more efficient the home.

, 1529 JEFFERSON AVE, MIAMI BEACH, FL, 33139-

1.	New construction or existing	New	
2.	Single family or multi-family	Multi-family	
3.	Number of units, if multi-family	3	
4.	Number of Bedrooms	1	
5.	Is this a worst case?	Yes	
6.	Conditioned floor area (ft²)	908 ft²	
7.	Glass type[1] and area: (Label reqd. by 13-104.4.5 if not default)		
	a. U-factor: (or Single or Double DEFAULT)	Description Area 7a (Sngle Default) 74.0 ft²	
	b. SHGC: (or Clear or Tint DEFAULT)	7b. (Clear) 127.0 ft²	
8.	Floor types		
	a. Slab-On-Grade Edge Insulation	R=0.0, 148.0(p) ft	
	b. N/A		
	c. N/A		
9.	Wall types		
	a. Concrete, Int Insul, Exterior	R=4.2, 862.0 ft²	
	b. N/A		
	c. N/A		
	d. N/A		
	e. N/A		
10.	Ceiling types		
	a. Single Assembly	R=19.0, 908.0 ft²	
	b. N/A		
	c. N/A		
11.	Ducts		
	a. Sup: Con. Ret: Con. AH(Sealed):Interior	Sup. R=6.0, 30.0 ft	
	b. N/A		
12.	Cooling systems		
	a. Central Unit	Cap: 24.0 kBtu/hr	
		SEER: 13.00	
	b. N/A		
	c. N/A		
13.	Heating systems		
	a. Electric Strip	Cap: 10.0 kBtu/hr	
		COP: 1.00	
	b. N/A		
	c. N/A		
14.	Hot water systems		
	a. Electric Resistance	Cap: 40.0 gallons	
		EF: 0.92	
	b. N/A		
	c. Conservation credits (HR-Heat recovery, Solar DHP-Dedicated heat pump)		
15.	HVAC credits (CF-Ceiling fan, CV-Cross ventilation, HF-Whole house fan, PT-Programmable Thermostat, MZ-C-Multizone cooling, MZ-H-Multizone heating)	PT,	

I certify that this home has complied with the Florida Energy Efficiency Code For Building Construction through the above energy saving features which will be installed (or exceeded) in this home before final inspection. Otherwise, a new EPL Display Card will be completed based on installed Code compliant features.

Builder Signature: _____ Date: _____

Address of New Home: _____ City/FL Zip: _____

**NOTE: The home's estimated energy performance score is only available through the FLA/RES computer program. This is not a Building Energy Rating. If your score is 80 or greater (or 86 for a US EPA/DOE EnergyStar™ designation), your home may qualify for energy efficiency mortgage (EEM) incentives if you obtain a Florida Energy Gauge Rating. Contact the Energy Gauge Hotline at 321/638-1492 or see the Energy Gauge web site at www.fsec.ucf.edu for information and a list of certified Raters. For information about Florida's Energy Efficiency Code For Building Construction, contact the Department of Community Affairs at 850/487-1824.*

1 Predominant glass type. For actual glass type and areas, see Summer & Winter Glass output on pages 2&4.

ENERGY PERFORMANCE LEVEL (EPL) DISPLAY CARD

ESTIMATED ENERGY PERFORMANCE SCORE* = 85.4

The higher the score, the more efficient the home.

, 1529 JEFFERSON AVE, MIAMI BEACH, FL, 33139-

1.	New construction or existing	New	
2.	Single family or multi-family	Multi-family	
3.	Number of units, if multi-family	3	
4.	Number of Bedrooms	1	
5.	Is this a worst case?	Yes	
6.	Conditioned floor area (ft²)	908 ft²	
7.	Glass type[1] and area: (Label reqd. by 13-104.4.5 if not default)		
	a. U-factor: (or Single or Double DEFAULT)	7a. (Sngle Default) 74.0 ft²	
	b. SHGC: (or Clear or Tint DEFAULT)	7b. (Clear) 127.0 ft²	
8.	Floor types		
	a. Slab-On-Grade Edge Insulation	R=0.0, 148.0(p) ft	
	b. N/A		
	c. N/A		
9.	Wall types		
	a. Concrete, Int Insul, Exterior	R=4.2, 862.0 ft²	
	b. N/A		
	c. N/A		
	d. N/A		
	e. N/A		
10.	Ceiling types		
	a. Single Assembly	R=19.0, 908.0 ft²	
	b. N/A		
	c. N/A		
11.	Ducts		
	a. Sup: Con. Ret: Con. AH(Sealed):Interior	Sup. R=6.0, 30.0 ft	
	b. N/A		

12.	Cooling systems		
	a. Central Unit	Cap: 24.0 kBtu/hr	
		SEER: 13.00	
	b. N/A		
	c. N/A		
13.	Heating systems		
	a. Electric Strip	Cap: 19.0 kBtu/hr	
		COP: 1.00	
	b. N/A		
	c. N/A		
14.	Hot water systems		
	a. Electric Resistance	Cap: 40.0 gallons	
		EF: 0.92	
	b. N/A		
	c. Conservation credits (HR-Heat recovery, Solar DHP-Dedicated heat pump)		
15.	HVAC credits (CF-Ceiling fan, CV-Cross ventilation, HF-Whole house fan, PT-Programmable Thermostat, MZ-C-Multizone cooling, MZ-H-Multizone heating)	PT,	

I certify that this home has complied with the Florida Energy Efficiency Code For Building Construction through the above energy saving features which will be installed (or exceeded) in this home before final inspection. Otherwise, a new EPL Display Card will be completed based on installed Code compliant features.

Builder Signature: _____ Date: _____

Address of New Home: _____ City/FL Zip: _____



**NOTE: The home's estimated energy performance score is only available through the FLA/RES computer program. This is not a Building Energy Rating. If your score is 80 or greater (or 86 for a US EPA/DOE EnergyStar™ designation), your home may qualify for energy efficiency mortgage (EEM) incentives if you obtain a Florida Energy Gauge Rating. Contact the Energy Gauge Hotline at 321/638-1492 or see the Energy Gauge web site at www.fsec.ucf.edu for information and a list of certified Raters. For information about Florida's Energy Efficiency Code For Building Construction, contact the Department of Community Affairs at 850/487-1824.*

1 Predominant glass type. For actual glass type and areas, see Summer & Winter Glass output on pages 2&4.

FORM 600A-2004 EnergyGauge®

FLORIDA ENERGY EFFICIENCY CODE FOR BUILDING CONSTRUCTION

Florida Department of Community Affairs

Residential Whole Building Performance Method A

Project Name:	**1529 JEFFERSON AVE N SIDE**	Builder:	
Address:	**1529 JEFFERSON AVE**	Permitting Office:	**MIAMI BEACH**
City, State:	**MIAMI BEACH, FL 33139-**	Permit Number:	
Owner:		Jurisdiction Number:	**232500**
Climate Zone:	**South**		

1. New construction or existing	New	12. Cooling systems	
2. Single family or multi-family	Multi-family	a. Central Unit	Cap: 24.0 kBtu/hr
3. Number of units, if multi-family	3		SEER: 13.00
4. Number of Bedrooms	1	b. N/A	
5. Is this a worst case?	Yes	c. N/A	
6. Conditioned floor area (ft²)	850 ft²	13. Heating systems	
7. Glass type[1] and area: (Label reqd. by 13-104.4.5 if not default)		a. Electric Strip	Cap: 19.0 kBtu/hr
a. U-factor:	Description Area		COP: 1.00
(or Single or Double DEFAULT) 7a.	(Sngle Default) 77.0 ft²	b. N/A	
b. SHGC:		c. N/A	
(or Clear or Tint DEFAULT) 7b.	(Clear) 151.0 ft²	14. Hot water systems	
8. Floor types		a. Electric Resistance	Cap: 40.0 gallons
a. Slab-On-Grade Edge Insulation	R=0.0, 140.0(p) ft		EF: 0.92
b. N/A		b. N/A	
c. N/A		c. Conservation credits	
9. Wall types		(HR-Heat recovery, Solar	
a. Concrete, Int Insul, Exterior	R=4.2, 748.0 ft²	DHP-Dedicated heat pump)	
b. N/A		15. HVAC credits	PT,
c. N/A		(CF-Ceiling fan, CV-Cross ventilation,	
d. N/A		HF-Whole house fan,	
e. N/A		PT-Programmable Thermostat,	
10. Ceiling types		MZ-C-Multizone cooling,	
a. Single Assembly	R=19.0, 850.0 ft²	MZ-H-Multizone heating)	
b. N/A			
c. N/A			
11. Ducts			
a. Sup: Con. Ret: Con. AH(Sealed):Interior	Sup. R=6.0, 30.0 ft		
b. N/A			

Glass/Floor Area: 0.18 Total as-built points: 11879 Total base points: 12312 **PASS**

I hereby certify that the plans and specifications covered by this calculation are in compliance with the Florida Energy Code.

PREPARED BY: _____

DATE: 6-7-06

I hereby certify that this building, as designed, is in compliance with the Florida Energy Code.

OWNER/AGENT: _____

DATE: _____

Review of the plans and specifications covered by this calculation indicates compliance with the Florida Energy Code. Before construction is completed this building will be inspected for compliance with Section 553.908 Florida Statutes.

BUILDING OFFICIAL: _____

DATE: _____

1 Predominant glass type. For actual glass type and areas, see Summer & Winter Glass output on pages 2&4.

FORM 600A-2004 EnergyGauge® 4.0

FLORIDA ENERGY EFFICIENCY CODE FOR BUILDING CONSTRUCTION

Florida Department of Community Affairs

Residential Whole Building Performance Method A

Project Name:	1529 JEFFERSON AVE N SIDE	Builder:	
Address:	1529 JEFFERSON AVE	Permitting Office:	MIAMI BEACH
City, State:	MIAMI BEACH, FL 33139-	Permit Number:	
Owner:		Jurisdiction Number:	232500
Climate Zone:	South		

1. New construction or existing	New	12. Cooling systems	
2. Single family or multi-family	Multi-family	a. Central Unit	Cap: 24.0 kBtu/hr
3. Number of units, if multi-family	3		SEER: 13.00
4. Number of Bedrooms	1	b. N/A	
5. Is this a worst case?	Yes	c. N/A	
6. Conditioned floor area (ft²)	850 ft²	13. Heating systems	
7. Glass type[1] and area: (Label reqd. by 13-104.4.5 if not default)		a. Electric Strip	Cap: 19.0 kBtu/hr
a. U-factor:	Description Area		COP: 1.00
(or Single or Double DEFAULT)	7a (Sngle Default) 77.0 ft²	b. N/A	
b. SHGC:		c. N/A	
(or Clear or Tint DEFAULT)	7b. (Clear) 151.0 ft²	14. Hot water systems	
8. Floor types		a. Electric Resistance	Cap: 40.0 gallons
a. Slab-On-Grade Edge Insulation	R=0.0, 140.0(p) ft		EF: 0.92
b. N/A		b. N/A	
c. N/A		c. Conservation credits	
9. Wall types		(HR-Heat recovery, Solar	
a. Concrete, Int Insul, Exterior	R=4.2, 748.0 ft²	DHP-Dedicated heat pump)	
b. N/A		15. HVAC credits	PT,
c. N/A		(CF-Ceiling fan, CV-Cross ventilation,	
d. N/A		HF-Whole house fan,	
e. N/A		PT-Programmable Thermostat,	
10. Ceiling types		MZ-C-Multizone cooling,	
a. Single Assembly	R=19.0, 850.0 ft²	MZ-H-Multizone heating)	
b. N/A			
c. N/A			
11. Ducts			
a. Sup: Con. Ret: Con. AH(Sealed):Interior	Sup. R=6.0, 30.0 ft		
b. N/A			

Glass/Floor Area: 0.18

Total as-built points: 11879

Total base points: 12312

PASS

I hereby certify that the plans and specifications covered by this calculation are in compliance with the Florida Energy Code.

PREPARED BY: _____

DATE: 6-21-06

I hereby certify that this building, as designed, is in compliance with the Florida Energy Code.

OWNER/AGENT: _____

DATE: _____

Review of the plans and specifications covered by this calculation indicates compliance with the Florida Energy Code. Before construction is completed this building will be inspected for compliance with Section 553.908 Florida Statutes.

BUILDING OFFICIAL: _____

DATE: _____

1 Predominant glass type. For actual glass type and areas, see Summer & Winter Glass output on pages 2&4.

SUMMER CALCULATIONS

Residential Whole Building Performance Method A - Details

ADDRESS: **1529 JEFFERSON AVE, MIAMI BEACH, FL, 33139-** PERMIT #:

BASE				AS-BUILT								
GLASS TYPES .18 X Conditioned Floor Area	X BSPM	= Points		Type/SC	Overhang Ornt	Len	Hgt	Area X	SPM X	SOF	= Points	
.18	850.0	32.50	4972.5	Single, Clear	SE	0.0	0.0	74.0	79.81	1.00	5906.2	
				Single, Clear	NE	0.0	0.0	28.0	55.61	1.00	1557.1	
				Single, Clear	SW	0.0	0.0	49.0	73.41	1.00	3597.0	
				As-Built Total:				**151.0**			**11060.3**	
WALL TYPES	Area X	BSPM =	Points	Type			R-Value	Area X	SPM	=	Points	
Adjacent	0.0	0.00	0.0	Concrete, Int Insul, Exterior			4.2	748.0	2.28		1705.4	
Exterior	748.0	2.70	2019.6									
Base Total:	**748.0**		**2019.6**	**As-Built Total:**				**748.0**			**1705.4**	
DOOR TYPES	Area X	BSPM =	Points	Type				Area X	SPM	=	Points	
Adjacent	0.0	0.00	0.0	Exterior Insulated				20.0	6.40		128.0	
Exterior	20.0	6.40	128.0									
Base Total:	**20.0**		**128.0**	**As-Built Total:**				**20.0**			**128.0**	
CEILING TYPES	Area X	BSPM =	Points	Type			R-Value	Area X	SPM X SCM	=	Points	
Under Attic	850.0	2.80	2380.0	Single Assembly			19.0	850.0	9.24 X 1.00		7854.0	
Base Total:	**850.0**		**2380.0**	**As-Built Total:**				**850.0**			**7854.0**	
FLOOR TYPES	Area X	BSPM =	Points	Type			R-Value	Area X	SPM	=	Points	
Slab	140.0(p)	-20.0	-2800.0	Slab-On-Grade Edge Insulation			0.0	140.0(p	-20.00		-2800.0	
Raised	0.0	0.00	0.0									
Base Total:			**-2800.0**	**As-Built Total:**				**140.0**			**-2800.0**	
INFILTRATION	Area X	BSPM =	Points					Area X	SPM	=	Points	
	850.0	18.79	15971.5					850.0	18.79		15971.5	

SUMMER CALCULATIONS

Residential Whole Building Performance Method A - Details

ADDRESS: **1529 JEFFERSON AVE, MIAMI BEACH, FL, 33139-** PERMIT #:

BASE			AS-BUILT					
Summer Base Points: 22671.6			**Summer As-Built Points:**					**33919.2**
Total Summer Points	X System Multiplier	= Cooling Points	Total Component (System - Points)	X Cap Ratio	X Duct Multiplier (DM x DSM x AHU)	X System Multiplier	X Credit Multiplier	= Cooling Points
			(sys 1: Central Unit 24000 btuh ,SEER/EFF(13.0) Ducts:Con(S),Con(R),Int(AH),R6.0(INS)					
22671.6	0.4266	9671.7	33919 **33919.2**	1.00 **1.00**	(1.00 x 1.165 x 0.85) **0.996**	0.262 **0.262**	0.950 **0.950**	8419.2 **8419.2**

WINTER CALCULATIONS

Residential Whole Building Performance Method A - Details

ADDRESS: **1529 JEFFERSON AVE, MIAMI BEACH, FL, 33139-** PERMIT #:

BASE				AS-BUILT							
GLASS TYPES .18 X Conditioned Floor Area	X BWPM	= Points		Type/SC	Overhang Ornt	Len	Hgt	Area X	WPM X	WOF	= Points
.18	850.0	2.36	361.1	Single, Clear	SE	0.0	0.0	74.0	4.22	1.00	312.4
				Single, Clear	NE	0.0	0.0	28.0	5.84	1.00	163.5
				Single, Clear	SW	0.0	0.0	49.0	5.06	1.00	247.7
				As-Built Total:				**151.0**			**723.6**
WALL TYPES	Area X	BWPM =	Points	Type			R-Value	Area X	WPM =		Points
Adjacent	0.0	0.00	0.0	Concrete, Int Insul, Exterior			4.2	748.0	1.02		763.0
Exterior	748.0	0.60	448.8								
Base Total:	**748.0**		**448.8**	**As-Built Total:**				**748.0**			**763.0**
DOOR TYPES	Area X	BWPM =	Points	Type				Area X	WPM =		Points
Adjacent	0.0	0.00	0.0	Exterior Insulated				20.0	1.80		36.0
Exterior	20.0	1.80	36.0								
Base Total:	**20.0**		**36.0**	**As-Built Total:**				**20.0**			**36.0**
CEILING TYPES	Area X	BWPM =	Points	Type			R-Value	Area X	WPM X	WCM =	Points
Under Attic	850.0	0.10	85.0	Single Assembly			19.0	850.0	0.11 X	1.00	93.5
Base Total:	**850.0**		**85.0**	**As-Built Total:**				**850.0**			**93.5**
FLOOR TYPES	Area X	BWPM =	Points	Type			R-Value	Area X	WPM =		Points
Slab	140.0(p)	-2.1	-294.0	Slab-On-Grade Edge Insulation			0.0	140.0(p	-2.10		-294.0
Raised	0.0	0.00	0.0								
Base Total:			**-294.0**	**As-Built Total:**				**140.0**			**-294.0**
INFILTRATION	Area X	BWPM =	Points					Area X	WPM =		Points
	850.0	-0.06	-51.0					850.0	-0.06		-51.0

WINTER CALCULATIONS

Residential Whole Building Performance Method A - Details

ADDRESS: **1529 JEFFERSON AVE, MIAMI BEACH, FL, 33139-** PERMIT #:

BASE			AS-BUILT					
Winter Base Points:		**585.9**	**Winter As-Built Points:**					**1271.1**
Total Winter Points	X System Multiplier	= Heating Points	Total Component (System - Points)	X Cap Ratio	X Duct Multiplier (DM x DSM x AHU)	X System Multiplier	X Credit Multiplier	= Heating Points
			(sys 1: Electric Strip 19000 btuh ,EFF(1.0) Ducts:Con(S),Con(R),Int(AH),R6.0					
585.9	0.6274	367.6	1271.1	1.00	0.983	1.000	0.950	1186.9

WATER HEATING & CODE COMPLIANCE STATUS

Residential Whole Building Performance Method A - Details

ADDRESS: **1529 JEFFERSON AVE, MIAMI BEACH, FL, 33139-** PERMIT #:

BASE				AS-BUILT							
WATER HEATING											
Number of Bedrooms	X Multiplier	= Total		Tank Volume	EF	Number of Bedrooms	X Tank Ratio	X Multiplier	X Credit Multiplier	= Total	
1	2273.00	2273.0		40.0	0.92	1	1.00	2273.00	1.00	2273.0	
				As-Built Total:						**2273.0**	

CODE COMPLIANCE STATUS

BASE				AS-BUILT			
Cooling Points	+ Heating Points	+ Hot Water Points	= Total Points	Cooling Points	+ Heating Points	+ Hot Water Points	= Total Points
9672	**368**	**2273**	**12312**	**8419**	**1187**	**2273**	**11879**

PASS

Code Compliance Checklist

Residential Whole Building Performance Method A - Details

ADDRESS: **1529 JEFFERSON AVE, MIAMI BEACH, FL, 33139-** PERMIT #:

6A-21 INFILTRATION REDUCTION COMPLIANCE CHECKLIST

COMPONENTS	SECTION	REQUIREMENTS FOR EACH PRACTICE	CHECK
Exterior Windows & Doors	606.1.ABC.1.1	Maximum: .3 cfm/sq.ft. window area; .5 cfm/sq.ft. door area.	✓
Exterior & Adjacent Walls	606.1.ABC.1.2.1	Caulk, gasket, weatherstrip or seal between: windows/doors & frames, surrounding wall; foundation & wall sole or sill plate; joints between exterior wall panels at corners; utility penetrations; between wall panels & top/bottom plates; between walls and floor. EXCEPTION: Frame walls where a continuous infiltration barrier is installed that extends from, and is sealed to, the foundation to the top plate.	✓
Floors	606.1.ABC.1.2.2	Penetrations/openings >1/8" sealed unless backed by truss or joint members. EXCEPTION: Frame floors where a continuous infiltration barrier is installed that is sealed to the perimeter, penetrations and seams.	✓
Ceilings	606.1.ABC.1.2.3	Between walls & ceilings; penetrations of ceiling plane of top floor; around shafts, chases, soffits, chimneys, cabinets sealed to continuous air barrier; gaps in gyp board & top plate; attic access. EXCEPTION: Frame ceilings where a continuous infiltration barrier is installed that is sealed at the perimeter, at penetrations and seams.	✓
Recessed Lighting Fixtures	606.1.ABC.1.2.4	Type IC rated with no penetrations, sealed; or Type IC or non-IC rated, installed inside a sealed box with 1/2" clearance & 3" from insulation; or Type IC rated with < 2.0 cfm from conditioned space, tested.	
Multi-story Houses	606.1.ABC.1.2.5	Air barrier on perimeter of floor cavity between floors.	N/A
Additional Infiltration reqts	606.1.ABC.1.3	Exhaust fans vented to outdoors, dampers; combustion space heaters comply with NFPA, have combustion air.	✓

6A-22 OTHER PRESCRIPTIVE MEASURES (must be met or exceeded by all residences.)

COMPONENTS	SECTION	REQUIREMENTS	CHECK
Water Heaters	612.1	Comply with efficiency requirements in Table 612.1.ABC.3.2. Switch or clearly marked cir breaker (electric) or cutoff (gas) must be provided. External or built-in heat trap required.	✓
Swimming Pools & Spas	612.1	Spas & heated pools must have covers (except solar heated). Non-commercial pools must have a pump timer. Gas spa & pool heaters must have a minimum thermal efficiency of 78%.	N/A ✓
Shower heads	612.1	Water flow must be restricted to no more than 2.5 gallons per minute at 80 PSIG.	✓
Air Distribution Systems	610.1	All ducts, fittings, mechanical equipment and plenum chambers shall be mechanically attached, sealed, insulated, and installed in accordance with the criteria of Section 610. Ducts in unconditioned attics: R-6 min. insulation.	✓
HVAC Controls	607.1	Separate readily accessible manual or automatic thermostat for each system.	✓
Insulation	604.1, 602.1	Ceilings-Min. R-19. Common walls-Frame R-11 or CBS R-3 both sides. Common ceiling & floors R-11.	✓

ENERGY PERFORMANCE LEVEL (EPL) DISPLAY CARD

ESTIMATED ENERGY PERFORMANCE SCORE* = 84.3

The higher the score, the more efficient the home.

, 1529 JEFFERSON AVE, MIAMI BEACH, FL, 33139-

1.	New construction or existing	New		12.	Cooling systems	
2.	Single family or multi-family	Multi-family			a. Central Unit	Cap: 24.0 kBtu/hr
3.	Number of units, if multi-family	3				SEER: 13.00
4.	Number of Bedrooms	1			b. N/A	
5.	Is this a worst case?	Yes				
6.	Conditioned floor area (ft²)	850 ft²			c. N/A	
7.	Glass type[1] and area: (Label reqd. by 13-104.4.5 if not default)					
	a. U-factor:	Description Area		13.	Heating systems	
	(or Single or Double DEFAULT)	7a (Sngle Default) 77.0 ft²			a. Electric Strip	Cap: 19.0 kBtu/hr
	b. SHGC:					COP: 1.00
	(or Clear or Tint DEFAULT)	7b. (Clear) 151.0 ft²			b. N/A	
8.	Floor types					
	a. Slab-On-Grade Edge Insulation	R=0.0, 140.0(p) ft			c. N/A	
	b. N/A					
	c. N/A			14.	Hot water systems	
9.	Wall types				a. Electric Resistance	Cap: 40.0 gallons
	a. Concrete, Int Insul, Exterior	R=4.2, 748.0 ft²				EF: 0.92
	b. N/A				b. N/A	
	c. N/A					
	d. N/A				c. Conservation credits	
	e. N/A				(HR-Heat recovery, Solar DHP-Dedicated heat pump)	
10.	Ceiling types			15.	HVAC credits	PT.
	a. Single Assembly	R=19.0, 850.0 ft²			(CF-Ceiling fan, CV-Cross ventilation, HF-Whole house fan, PT-Programmable Thermostat, MZ-C-Multizone cooling, MZ-H-Multizone heating)	
	b. N/A					
	c. N/A					
11.	Ducts					
	a. Sup: Con. Ret: Con. AH(Sealed):Interior	Sup. R=6.0, 30.0 ft				
	b. N/A					

I certify that this home has complied with the Florida Energy Efficiency Code For Building Construction through the above energy saving features which will be installed (or exceeded) in this home before final inspection. Otherwise, a new EPL Display Card will be completed based on installed Code compliant features.

Builder Signature: _____ Date: _____

Address of New Home: _____ City/FL Zip: _____



**NOTE: The home's estimated energy performance score is only available through the FLA/RES computer program. This is not a Building Energy Rating. If your score is 80 or greater (or 86 for a US EPA/DOE EnergyStar™ designation), your home may qualify for energy efficiency mortgage (EEM) incentives if you obtain a Florida Energy Gauge Rating. Contact the Energy Gauge Hotline at 321/638-1492 or see the Energy Gauge web site at www.fsec.ucf.edu for information and a list of certified Raters. For information about Florida's Energy Efficiency Code For Building Construction, contact the Department of Community Affairs at 850/487-1824.*

1 Predominant glass type. For actual glass type and areas, see Summer & Winter Glass output on pages 2&4.

ENERGY PERFORMANCE LEVEL (EPL) DISPLAY CARD

ESTIMATED ENERGY PERFORMANCE SCORE* = 84.3

The higher the score, the more efficient the home.

, 1529 JEFFERSON AVE, MIAMI BEACH, FL, 33139-

1.	New construction or existing	New	__
2.	Single family or multi-family	Multi-family	__
3.	Number of units, if multi-family	3	__
4.	Number of Bedrooms	1	__
5.	Is this a worst case?	Yes	__
6.	Conditioned floor area (ft²)	850 ft²	__
7.	Glass type[1] and area: (Label reqd. by 13-104.4.5 if not default)		
	a. U-factor: (or Single or Double DEFAULT)	7a. (Sngle Default) 77.0 ft²	__
	b. SHGC: (or Clear or Tint DEFAULT)	7b. (Clear) 151.0 ft²	__
8.	Floor types		
	a. Slab-On-Grade Edge Insulation	R=0.0, 140.0(p) ft	__
	b. N/A		__
	c. N/A		__
9.	Wall types		
	a. Concrete, Int Insul, Exterior	R=4.2, 748.0 ft²	__
	b. N/A		__
	c. N/A		__
	d. N/A		__
	e. N/A		__
10.	Ceiling types		
	a. Single Assembly	R=19.0, 850.0 ft²	__
	b. N/A		__
	c. N/A		__
11.	Ducts		
	a. Sup: Con. Ret: Con. AH(Sealed):Interior	Sup. R=6.0, 30.0 ft	__
	b. N/A		__
12.	Cooling systems		
	a. Central Unit	Cap: 24.0 kBtu/hr	__
		SEER: 13.00	__
	b. N/A		__
			__
	c. N/A		__
			__
13.	Heating systems		
	a. Electric Strip	Cap: 19.0 kBtu/hr	__
		COP: 1.00	__
	b. N/A		__
			__
	c. N/A		__
			__
14.	Hot water systems		
	a. Electric Resistance	Cap: 40.0 gallons	__
		EF: 0.92	__
	b. N/A		__
			__
	c. Conservation credits (HR-Heat recovery, Solar DHP-Dedicated heat pump)		__
15.	HVAC credits (CF-Ceiling fan, CV-Cross ventilation, HF-Whole house fan, PT-Programmable Thermostat, MZ-C-Multizone cooling, MZ-H-Multizone heating)	PT.	__

I certify that this home has complied with the Florida Energy Efficiency Code For Building Construction through the above energy saving features which will be installed (or exceeded) in this home before final inspection. Otherwise, a new EPL Display Card will be completed based on installed Code compliant features.

Builder Signature: _____ Date: _____

Address of New Home: _____ City/FL Zip: _____



**NOTE: The home's estimated energy performance score is only available through the FLA/RES computer program. This is not a Building Energy Rating. If your score is 80 or greater (or 86 for a US EPA/DOE EnergyStar™ designation), your home may qualify for energy efficiency mortgage (EEM) incentives if you obtain a Florida Energy Gauge Rating. Contact the Energy Gauge Hotline at 321/638-1492 or see the Energy Gauge web site at www.fsec.ucf.edu for information and a list of certified Raters. For information about Florida's Energy Efficiency Code For Building Construction, contact the Department of Community Affairs at 850/487-1824.*

1 Predominant glass type. For actual glass type and areas, see Summer & Winter Glass output on pages 2&4.

A/C LOAD CALC

SYSTEM SIZING SUMMARY

System: 1529 JEFFERSON N 1 2 FL | **Block Load 3.05**
Location: Miami, Florida | **May 23, 2006**
Prepared by: IEG | **Page: 1**

TABLE 1. SIZING DATA (COOLING)

Total Coil Load	15,864	BTU/hr	Load Occurs	June 17:00	
Sensible Coil Load	14,360	BTU/hr	Outdoor Db/Wb	88.5/76.6	F
Total Zone Sensible	13,169	BTU/hr	Coil Conditions:		
Supply Temperature	57.0	F	Entering Db/Wb	75.6/63.4	F
Supply Air (Actual)	678	CFM	Leaving Db/Wb	56.0/55.4	F
Supply Air (Standard)	677	CFM	Apparatus Dewpoint	54.9	F
Ventilation Air	30	CFM	Bypass Factor	0.050	
Direct Exhaust Air	0	CFM	Resulting Zone RH	50.5	%
Reheat Required	0	BTU/hr			
			Total Coil Load	1.32	Ton
Floor Area	830	sqft	Sensible Coil Load	1.20	Ton
Overall U-Value	0.314	BTU/hr/sqft/F	SQFT/Ton	627.84	
Vent Air	0.04	CFM/sqft	Cooling	19.11	BTU/hr/sqft
Vent Air	15.00	CFM/Person	Cooling	0.82	CFM/sqf

TABLE 2. SIZING DATA (HEATING)

Heating Coil Load	7,989	BTU/hr	Heating	9.63	BTU/hr/sqft
Ventilation Load	842	BTU/hr	Heating	0.82	CFM/sqft
Total Zone Load	7,147	BTU/hr	Floor Area	830	sqft
Ventilation Airflow	30	CFM	Overall U-Value	0.314	
Supply Airflow	678	CFM	Vent Air	0.04	CFM/sqft
			Vent Air	15.00	CFM/Person

TABLE 3. INPUT DATA (WEATHER)

Location	Miami, Florida				
Data Source	User Defined		Summer Dry-Bulb	91.0	F
Latitude	25.8	Degree	Coincident Wet-Bulb	77.0	F
Elevation	7.0	ft	Daily Range	15.0	F
Atmospheric Clearness #	0.90		Winter Dry-Bulb	44.0	F

TABLE 4. INPUT (HVAC SYSTEM)

System Name	1529 JEFFERSON N 1 2 FL		THERMOSTAT SETPOINTS		
System Type	Clg and Warm Air Ht		Cooling (Occ.)	75.0	F
System Start	6:00		Cooling (Unocc.)	75.0	F
Duration	24	hrs	Heating	70.0	F
SIZING SPECIFICATIONS			RETURN AIR PLENUM	No	
Supply	57.0	F	FAN		
Ventilation	15.00	CFM/person	Configuration	Draw-Thru	
Exhaust	0.00	CFM	Static Pressure	1.50	in. wg.
FACTORS					
Coil Bypass	0.050				
Safety (Sens)	0	%			
Safety (Latent)	0	%			
Heating Safety	0	%			

TABLE 5. TOP TEN COOLING COIL LOADS

	Time	Sensible Ton	Total Ton		Time	Sensible Ton	Total Ton
1)	June 17:00	1.20	1.32	6)	July 18:00	1.16	1.28
2)	July 17:00	1.20	1.32	7)	August 17:00	1.15	1.28
3)	July 16:00	1.18	1.30	8)	July 15:00	1.15	1.27
4)	June 16:00	1.17	1.30	9)	August 16:00	1.14	1.27
5)	June 18:00	1.16	1.29	10)	June 15:00	1.14	1.26

SYSTEM SIZING SUMMARY

TABLE 6. ZONE SIZING DATA

Zone Name	Max. Cooling Sensible (BTU/hr)	Design Airflow Rate (CFM)	Design Time	Max. Heating Load (BTU/hr)	Design Flow Rate (CFM)
1	13,169	678	June 17:00	7,147	-
	Total:	678		Total:	.00

SYSTEM SIZING SUMMARY

System: 1529 JEFFERSON N 3 FL
Location: Miami, Florida
Prepared by: IEG

Block Load 3.05
May 23, 2006

TABLE 1. SIZING DATA (COOLING)

Total Coil Load	17,387 BTU/hr	Load Occurs	July 17:00
Sensible Coil Load	15,913 BTU/hr	Outdoor Db/Wb	89.5/76.6 F
Total Zone Sensible	14,608 BTU/hr	Coil Conditions:	
Supply Temperature	57.0 F	Entering Db/Wb	75.6/63.3 F
Supply Air (Actual)	752 CFM	Leaving Db/Wb	56.0/55.4 F
Supply Air (Standard)	751 CFM	Apparatus Dewpoint	54.9 F
Ventilation Air	30 CFM	Bypass Factor	0.050
Direct Exhaust Air	0 CFM	Resulting Zone RH	50.4 %
Reheat Required	0 BTU/hr		
		Total Coil Load	1.45 Ton
Floor Area	850 sqft	Sensible Coil Load	1.33 Ton
Overall U-Value	0.205 BTU/hr/sqft/F	SQFT/Ton	586.66
Vent Air	0.04 CFM/sqft	Cooling	20.45 BTU/hr/sqft
Vent Air	15.00 CFM/Person	Cooling	0.88 CFM/sqft

TABLE 2. SIZING DATA (HEATING)

Heating Coil Load	10,471 BTU/hr	Heating	12.32 BTU/hr/sqft
Ventilation Load	842 BTU/hr	Heating	0.88 CFM/sqft
Total Zone Load	9,629 BTU/hr	Floor Area	850 sqft
Ventilation Airflow	30 CFM	Overall U-Value	0.205
Supply Airflow	752 CFM	Vent Air	0.04 CFM/sqft
		Vent Air	15.00 CFM/Person

TABLE 3. INPUT DATA (WEATHER)

Location	Miami, Florida		
Data Source	User Defined	Summer Dry-Bulb	91.0 F
Latitude	25.8 Degree	Coincident Wet-Bulb	77.0 F
Elevation	7.0 ft	Daily Range	15.0 F
Atmospheric Clearness #	0.90	Winter Dry-Bulb	44.0 F

TABLE 4. INPUT (HVAC SYSTEM)

System Name	1529 JEFFERSON N 3 FL	THERMOSTAT SETPOINTS	
System Type	Clg and Warm Air Ht	Cooling (Occ.)	75.0 F
System Start	6:00	Cooling (Unocc.)	75.0 F
Duration	24 hrs	Heating	70.0 F
SIZING SPECIFICATIONS		RETURN AIR PLENUM	No
Supply	57.0 F	FAN	
Ventilation	15.00 CFM/person	Configuration	Draw-Thru
Exhaust	0.00 CFM	Static Pressure	1.50 in. wg.
FACTORS			
Coil Bypass	0.050		
Safety (Sens)	0 %		
Safety (Latent)	0 %		
Heating Safety	0 %		

TABLE 5. TOP TEN COOLING COIL LOADS

	Time	Sensible Ton	Total Ton		Time	Sensible Ton	Total Ton
1)	July 17:00	1.33	1.45	6)	July 18:00	1.28	1.41
2)	June 17:00	1.32	1.45	7)	August 17:00	1.27	1.39
3)	July 16:00	1.30	1.42	8)	July 15:00	1.26	1.39
4)	June 16:00	1.29	1.42	9)	August 16:00	1.26	1.38
5)	June 18:00	1.29	1.41	10)	June 15:00	1.25	1.38

SYSTEM SIZING SUMMARY

TABLE 6. ZONE SIZING DATA

Zone Name	Max. Cooling Sensible (BTU/hr)	Design Airflow Rate (CFM)	Design Time	Max. Heating Load (BTU/hr)	Design Flow Rate (CFM)
1	14,608	752	July 17:00	9,629	-
	Total:	752		Total:	.00

SYSTEM SIZING SUMMARY

System: 1529 JEFFERSON S 1 2 FL | **Block Load 3.05**
Location: Miami, Florida | **May 23, 2006**
Prepared by: IEG | **Page: 1**

TABLE 1. SIZING DATA (COOLING)

Total Coil Load	16,542 BTU/hr	Load Occurs	October 15:00
Sensible Coil Load	15,191 BTU/hr	Outdoor Db/Wb	87.0/75.0 F
Total Zone Sensible	14,001 BTU/hr	Coil Conditions:	
Supply Temperature	57.0 F	Entering Db/Wb	75.5/63.3 F
Supply Air (Actual)	720 CFM	Leaving Db/Wb	56.0/55.4 F
Supply Air (Standard)	720 CFM	Apparatus Dewpoint	54.9 F
Ventilation Air	30 CFM	Bypass Factor	0.050
Direct Exhaust Air	0 CFM	Resulting Zone RH	50.4 %
Reheat Required	0 BTU/hr		
		Total Coil Load	1.38 Ton
Floor Area	946 sqft	Sensible Coil Load	1.27 Ton
Overall U-Value	0.331 BTU/hr/sqft/F	SQFT/Ton	686.25
Vent Air	0.03 CFM/sqft	Cooling	17.49 BTU/hr/sqft
Vent Air	15.00 CFM/Person	Cooling	0.76 CFM/sq.ft

TABLE 2. SIZING DATA (HEATING)

Heating Coil Load	8,994 BTU/hr	Heating	9.51 BTU/hr/sqft
Ventilation Load	842 BTU/hr	Heating	0.76 CFM/sqft
Total Zone Load	8,152 BTU/hr	Floor Area	946 sqft
Ventilation Airflow	30 CFM	Overall U-Value	0.331
Supply Airflow	720 CFM	Vent Air	0.03 CFM/sqft
		Vent Air	15.00 CFM/Person

TABLE 3. INPUT DATA (WEATHER)

Location	Miami, Florida		
Data Source	User Defined	Summer Dry-Bulb	91.0 F
Latitude	25.8 Degree	Coincident Wet-Bulb	77.0 F
Elevation	7.0 ft	Daily Range	15.0 F
Atmospheric Clearness #	0.90	Winter Dry-Bulb	44.0 F

TABLE 4. INPUT (HVAC SYSTEM)

System Name	1529 JEFFERSON S 1 2 FL	THERMOSTAT SETPOINTS	
System Type	Clg and Warm Air Ht	Cooling (Occ.)	75.0 F
System Start	6:00	Cooling (Unocc.)	75.0 F
Duration	24 hrs	Heating	70.0 F
SIZING SPECIFICATIONS		RETURN AIR PLENUM	No
Supply	57.0 F	FAN	
Ventilation	15.00 CFM/person	Configuration	Draw-Thru
Exhaust	0.00 CFM	Static Pressure	1.50 in. wg.
FACTORS			
Coil Bypass	0.050		
Safety (Sens)	0 %		
Safety (Latent)	0 %		
Heating Safety	0 %		

TABLE 5. TOP TEN COOLING COIL LOADS

	Time	Sensible Ton	Total Ton		Time	Sensible Ton	Total Ton
1)	October 15:00	1.27	1.38	6)	November 14:00	1.24	1.35
2)	November 15:00	1.26	1.37	7)	December 15:00	1.23	1.33
3)	October 16:00	1.25	1.37	8)	October 17:00	1.21	1.32
4)	November 16:00	1.25	1.36	9)	October 13:00	1.20	1.31
5)	October 14:00	1.25	1.36	10)	December 16:00	1.22	1.31

SYSTEM SIZING SUMMARY

System: 1529 JEFFERSON S 1 2 FL
Location: Miami, Florida
Prepared by: IEG

Block Load 3.05
May 23, 2006
Page: 2

TABLE 6. ZONE SIZING DATA

Zone Name	Max. Cooling Sensible (BTU/hr)	Design Airflow Rate (CFM)	Design Time	Max. Heating Load (BTU/hr)	Design Flow Rate (CFM)
1	14,053	723	November 15:00	8,152	-
	Total:	723		Total:	.00

SYSTEM SIZING SUMMARY

System: 1529 JEFFERSON S 3 FL
Location: Miami, Florida
Prepared by: IEG

Block Load 3.05
May 23, 2006

TABLE 1. SIZING DATA (COOLING)

Total Coil Load	17,665 BTU/hr	Load Occurs	October 15:00
Sensible Coil Load	16,313 BTU/hr	Outdoor Db/Wb	87.0/75.0 F
Total Zone Sensible	15,062 BTU/hr	Coil Conditions:	
Supply Temperature	57.0 F	Entering Db/Wb	75.5/63.2 F
Supply Air (Actual)	775 CFM	Leaving Db/Wb	56.0/55.4 F
Supply Air (Standard)	775 CFM	Apparatus Dewpoint	54.9 F
Ventilation Air	30 CFM	Bypass Factor	0.050
Direct Exhaust Air	0 CFM	Resulting Zone RH	50.4 %
Reheat Required	0 BTU/hr		
		Total Coil Load	1.47 Ton
Floor Area	908 sqft	Sensible Coil Load	1.36 Ton
Overall U-Value	0.188 BTU/hr/sqft/F	SQFT/Ton	616.80
Vent Air	0.03 CFM/sqft	Cooling	19.46 BTU/hr/sqft
Vent Air	15.00 CFM/Person	Cooling	0.85 CFM/sqf.

TABLE 2. SIZING DATA (HEATING)

Heating Coil Load	10,767 BTU/hr	Heating	11.86 BTU/hr/sqft
Ventilation Load	842 BTU/hr	Heating	0.85 CFM/sqft
Total Zone Load	9,925 BTU/hr	Floor Area	908 sqft
Ventilation Airflow	30 CFM	Overall U-Value	0.188
Supply Airflow	775 CFM	Vent Air	0.03 CFM/sqft
		Vent Air	15.00 CFM/Person

TABLE 3. INPUT DATA (WEATHER)

Location	Miami, Florida		
Data Source	User Defined	Summer Dry-Bulb	91.0 F
Latitude	25.8 Degree	Coincident Wet-Bulb	77.0 F
Elevation	7.0 ft	Daily Range	15.0 F
Atmospheric Clearness #	0.90	Winter Dry-Bulb	44.0 F

TABLE 4. INPUT (HVAC SYSTEM)

System Name	1529 JEFFERSON S 3 FL	THERMOSTAT SETPOINTS	
System Type	Clg and Warm Air Ht	Cooling (Occ.)	75.0 F
System Start	6:00	Cooling (Unocc.)	75.0 F
Duration	24 hrs	Heating	70.0 F
SIZING SPECIFICATIONS		RETURN AIR PLENUM	No
Supply	57.0 F	FAN	
Ventilation	15.00 CFM/person	Configuration	Draw-Thru
Exhaust	0.00 CFM	Static Pressure	1.50 in. wg.
FACTORS			
Coil Bypass	0.050		
Safety (Sens)	0 %		
Safety (Latent)	0 %		
Heating Safety	0 %		

TABLE 5. TOP TEN COOLING COIL LOADS

	Time	Sensible Ton	Total Ton		Time	Sensible Ton	Total Ton
1)	October 15:00	1.36	1.47	6)	October 17:00	1.32	1.43
2)	October 16:00	1.36	1.47	7)	September 15:00	1.29	1.41
3)	November 15:00	1.33	1.44	8)	November 14:00	1.30	1.41
4)	October 14:00	1.33	1.44	9)	September 16:00	1.29	1.41
5)	November 16:00	1.33	1.44	10)	October 18:00	1.27	1.39

SYSTEM SIZING SUMMARY

System: 1529 JEFFERSON S 3 FL
Location: Miami, Florida
Prepared by: IEG

Block Load 3.05
May 23, 2006
Page: 2

TABLE 6. ZONE SIZING DATA

Zone Name	Max. Cooling Sensible (BTU/hr)	Design Airflow Rate (CFM)	Design Time	Max. Heating Load (BTU/hr)	Design Flow Rate (CFM)
1	15,062	775	October 15:00	9,925	-
	Total:	775		Total:	.00

GEOTECHNICAL
ENVIRONMENTAL
HYDROGEOLOGY
ASBESTOS

TESTING LABORATORIES
DRILLING SERVICES
INSPECTION SERVICES
ROOFING

DYNATECH ENGINEERING CORP.

Miami, April 20, 2006

Mr. John Wyatt
3DESIGN, INC.
1234 Washington Avenue, Suite 207
Miami Beach, FL 33139

Re: Proposed 3-Story Building @
1529 Jefferson Avenue
Miami Beach, FL

Dear Mr. Wyatt:

Pursuant to your request, DYNATECH ENGINEERING CORP. completed a Preliminary Subsoil investigation on April 20, 2006 at the above referenced project. The purpose of our investigation was to verify subsoil conditions relative to foundation design of the proposed structures.

A total of (2) standard penetration boring tests were performed according to ASTM-D 1586 down to an average depth of 40' below existing ground surface.

The following graph was developed as a general condition for the subject site: (refer to field boring logs for exact locations and soil conditions):

Depth		
From	To	Description
0'-0"	0'-6"	Topsoil and grass
0'-6"	1'-0"	Brown sand
1'-0"	2'-0"	Tan beach sand
2'-0"	3'-0"	Tan silty beach sand
3'-0"	4'-0"	Gray silt
4'-0"	6'-0"	Peat
6'-0"	7'-6"	Gray beach sand with peat
7'-6"	20'-0"	Gray beach sand
20'-0"	32'-0"	Tan very sandy limerock
32'-0"	40'-0"	Tan sandy limerock

Groundwater table elevation was measured immediately at the completion of each boring and was found at an average depth of 3' below existing ground surface. Fluctuation in water level should be anticipated due to seasonal variations and run off as well as varying ground elevations construction dewatering pumping activities in the area. Site contractor must familiarize himself with site conditions in the event dewatering is needed.

750 West 84 Street, Hialeah, FL 33014-3618 • Phone (305) 828-7499 • Fax (305) 828-9598

Based on our understanding of the proposed structure and our field boring logs; it is evident that the deep foundation system are needed to support the proposed structures without detrimental settlement to the structure.

Deep foundation systems shall consist of one of the following alternatives:

Alternatives Pile Foundation	Approximate Pile Depth	Size	Pile Capacity in Tons Compression	Pile Capacity in Tons Tension	Allowable Lateral Capacity in Tons
Pin Piles	To Refusal	3-4 Inch	5-10 Tons	2 Tons	1 Ton
Helical Piles	35' BLS	3-4 Inch	8-15 Tons	5 Tons	1 Ton
Auger Cast Piles	35' BLS	12 Inch	25 Tons	12 Tons	2 Tons
Auger Cast Piles	35' BLS	14 Inch	35 Tons	17 Tons	2 Tons
Precast Concrete Piles	35' BLS	10"x 10"	17 Tons	5 Tons	1 Tons
Precast Concrete Piles	35' BLS	12"x 12"	25 Tons	7 Tons	1 Tons
Precast Concrete Piles	35' BLS	14"x 14"	35 Tons	10 Tons	2 Tons

B.E.L.S.: Below Existing Land Surface

Estimated Lateral Load for a pile Top Deflection of ¼ inch. The proposed pile length is based on the existing ground elevation at the time of drilling. Pile length may vary depending on proposed grade beam elevation and soil profile.

In the case of the Pin, Helical, or Precast piles a minimum of 4 piles shall be driven to determine production pile length. All work shall be performed in accordance with the applicable building code.

In case of existing structures in the vicinity of the pile driving operation, care shall be taken not to create excessive vibration. Vibration levels shall be monitored to verify compliance with county regulations. Steps must be taken to prevent excessive vibrations. The minimum center to center of piles or adjacent foundations shall be not less than twice the average diameter for round piles or 1 – ¾ times the diagonal dimensions of rectangular piles, but in no case less than 30 inches.

All piles shall be designed by a professional engineer and shall be placed under supervision of our Geotechnical Engineer to verify compliance with our recommendations.

Regardless of the thoroughness of a geotechnical exploration there is always the possibility that conditions may be different from those of the test locations; therefore, DYNATECH ENGINEERING CORP., does not guarantee any subsoil conditions between the bore test holes. In accepting this report the client understands that all data from the borings are strictly for foundation analysis only and are not to be used for excavation or back filling estimates and pricing. Site contractor must familiarize himself with site conditions prior to bidding. As a mutual protection to clients, the public and ourselves, all reports are submitted as the confidential property of clients, and authorization for publication of statements, conclusions or extracts from or regarding our reports is reserved pending our written approval. All work must be conducted under the supervision of our geotechnical engineer. The discovery of any site or subsurface conditions during construction which deviate from the information obtained from our subsoil investigation is always likely and should be reported to us for our evaluation.

It has been a pleasure working with you and look forward to do so in the near future. Please feel free to contact us if we may be of further service to you.

Sincerely yours,

Wissam Naamani, P.E.
DYNATECH ENGINEERING CORP.
Florida Reg. No. 39584
Special Inspector No. 757
WN/sk

DYNATECH ENGINEERING CORP.

750 WEST 84TH STREET
HIALEAH, FL 33014
(305) 828-7499

TEST BORING REPORT

CLIENT : **3DESIGN, INC.**
PROJECT : Proposed 3-Story Building @
ADDRESS : 1529 Jefferson Avenue, Miami Beach, FL.
LOCATION : See attached plan

DATE: 4-12-06
HOLE NO.: B-1
DRILLER: AS & LD

DEPTH	DESCRIPTION OF MATERIALS		SAMPLE NO.	HAMMER BLOWS ON SAMPLER	"N"
1			2	Hand	H
2					
3	0'-0" to 0'-6"	TOPSOIL AND GRASS	4	Hand	H
4					
5	0'-6" to 1'-0"	DARK BROWN FINE SAND	6	2 2 2 2	4
6					
7	1'-0" to 2'-0"	TAN BEACH SAND	8	1 1 2 3	3
8					
9	2'-0" to 3'-0"	TAN SILTY BEACH SAND	10	8 6 5 8	14
10					
11	3'-0" to 4'-0"	GRAY SILT	12	5 12 11 10	23
12					
13	4'-0" to 6'-0"	PEAT	14	12 11 11 10	22
14					
15	6'-0" to 7'-6"	GRAY BEACH SAND WITH PEAT	16	15 12 12 11	24
16					
17	7'-6" to 20'-0"	GRAY BEACH SAND	18	A	A
18					
19			20	A	A
20	20'-0" to 32'-0"	TAN VERY SANDY LIMERCK	22	A	A
21					
22	32'-0" to 40'-0"	TAN SANDY LIMEROCK	24	10 10 12 11	22
23					
24			26	A	A
25					
26			28	A	A
27					
28			30	A	A
29					
30			32	19 18 16 18	34
31					
32			34	A	
33					
34			36	A	
35					
36			38	A	
37					
38					

Water Level: 3' **Below Surface** As a mutual protection to clients, the public and ourselves, all reports are submitted as the confidential property of clients, and authorization for publication of statement conclusions or extracts from or regarding our reports is reserved pending on our written approval.. H.A.: HAND AUGER; A: AUGER; R: REFUSAL

DYNATECH ENGINEERING CORP.

750 WEST 84TH STREET
HIALEAH, FL 33014
(305) 828-7499

TEST BORING REPORT

CLIENT : **3DESIGN, INC.**
PROJECT : Proposed 3-Story Building @
ADDRESS : 1529 Jefferson Avenue, Miami Beach, FL.
LOCATION : See attached plan

DATE: 4-12-06
HOLE NO.: B-2
DRILLER: AS & LD

DEPTH	DESCRIPTION OF MATERIALS		SAMPLE NO.	HAMMER BLOWS ON SAMPLER	"N"
1			2	Hand	H
2	0'-0" to 0'-6"	TOPSOIL AND GRASS	4	Hand	H
3	0'-6" to 1'-0"	DARK BROWN FINE SAND	6	2 2 1 1	3
4	1'-0" to 2'-0"	TAN BEACH SAND	8	2 2 2 3	4
5	2'-0" to 3'-0"	TAN SILTY BEACH SAND	10	5 5 6 8	11
6	3'-0" to 4'-0"	GRAY SILT	12	10 13 11 12	24
7	4'-0" to 6'-0"	PEAT	14	19 13 14 14	27
8	6'-0" to 7'-6"	GRAY BEACH SAND WITH PEAT	16	15 12 11 12	23
9	7'-6" to 20'-0"	GRAY BEACH SAND	18	A	A
10	20'-0" to 32'-0"	TAN VERY SANDY LIMERCK	20	A	A
11	32'-0" to 40'-0"	TAN SANDY LIMEROCK	22	A	A
12			24	10 12 11 10	23
13			26	A	A
14			28	A	A
15			30	A	A
16			32	18 20 21 19	41
17			34	A	
18			36	A	
19			38	A	
20					
21					
22					
23					
24					
25					
26					
27					
28					
29					
30					
31					
32					
33					
34					
35					
36					
37					
38					

Water Level: 3' **Below Surface**

As a mutual protection to clients, the public and ourselves, all reports are submitted as the confidential property of clients, and authorization for publication of statement conclusions or extracts from or regarding our reports is reserved pending on our written approval.

H.A.: HAND AUGER; A: AUGER; R: REFUSAL

FAX: (305) 264-0229

DRAWN BY: NG.

LAND SURVEYORS

SHEET No. 2 OF 2

BOUNDARY SURVEY

SCALE = 1" : 20'

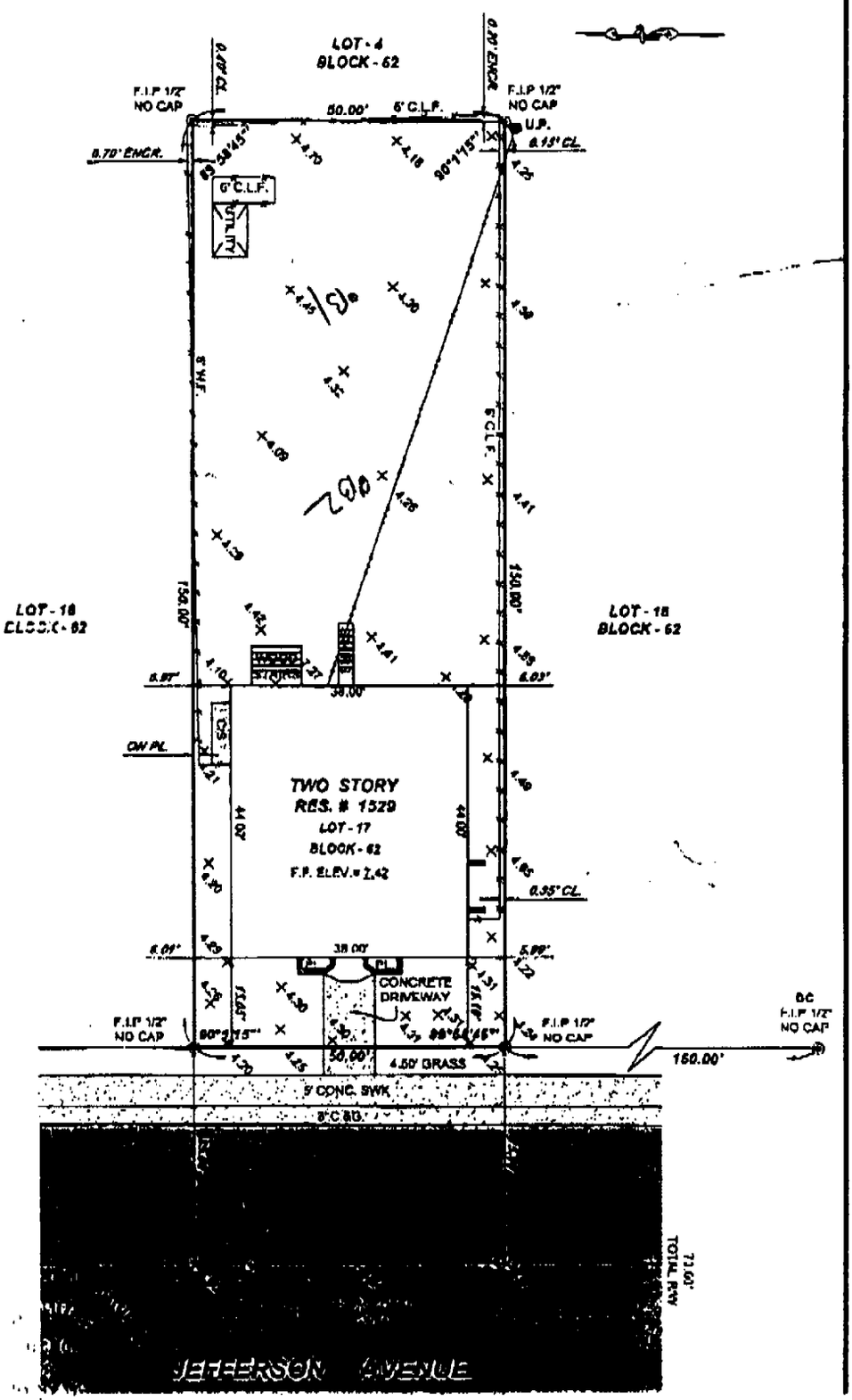

Apr 11 06 05:34p 3Design, Inc. 3055314515 p.2

APPENDIX

GENERAL NOTES

Soil borings on unmarked vacant property should be considered preliminary with further boring (s) to be drilled after building pad (s) are staked out.

Soil borings on existing structures that are to be demolished should be considered preliminary and additional borings would need to be performed after the structures has been demolished and the proposed new building staked out.

As a mutual protection to clients, the public and ourselves, all reports are submitted as the confidential property of clients, and authorization for publication of statements, conclusions or extracts from or regarding our reports is reserved pending our written approval.

KEY CLASSIFICATION & SYMBOLS

Correlation of Penetration Resistance
With Relative Density and Consistency

	Cone Penetration Tests kg/cm ²	Standard Penetration blows/ft	Relative Density
Sands	0 – 16	0 – 4	Very loose
	17 - 40	5- 10	Loose
	41 – 80	11- 20	Firm
	81 – 120	21 - 30	Very firm
	Over 120	31 – 50	Dense
Silts & Clays	0 – 3	0 – 2	Very loose
	4 – 9	3 – 4	Soft
	10- 7	5 – 8	Firm
	18 – 31	9 – 15	Stiff
	32 – 60	16- 30	Very Stiff
	Over 60	31 – 50	Hard

Particle Size

Boulders	> 12 in.
Cobble	3 to 1 in.
Gravel	4.76 mm to 3 in.
Sand	0.07 mm to 4.76 mm
Silt	0.005 mm to 0.074 mm
Clay	< 0.005 mm

Modifiers

5% - 10%	Slightly silty or Clayey
10% - 30%	Silty or Clayey
30% - 50%	Very silty or Very Clayey
0 – 5%	Slightly Trace
6 – 10%	Trace
11 – 20%	Little
21 – 35%	Some
> 35%	And

Rock Hardness Description

Soft	Rock core crumbles when handled.
Medium	Can break core with your hands.
Moderate Hard	Thin edges or rock core can be broken with fingers.
Hard	Thin edges of rock core cannot be broken with fingers.
Very Hard	Rock core rings when struck with a hammer (cherts)

INNOVATIVE ENGINEERING – HYDRAULIC DESIGN INFORMATION SHEET

NAME 4 STORY CONDO DATE JUNE 16, 2006

LOCATION 1529 JEFFERSON AVE. MIAMI BEACH

BUILDING CONDOMINIUM BLDG. SYSTEM NO. 4TH FLOOR

CONTRACTOR _____ CONTRACT NO. _____

CALCULATED BY INNOVATIVE ENGINEERING GRP. INC. DRAWING NO. VARIOUS

CONSTRUCTION: [ ] COMBUSTIBLE [X] NON-COMBUSTIBLE CEILING HEIGHT (FT.) _____

OCCUPANCY _____

SYSTEM DESIGN

[ ] NFPA 13 [ ] LT. HAZARD ORD. HAZARD GP. [ ] 1 [ ] 2 EX. HAZ. GP. [ ]1 [ ]2

[ ] NFPA 231 [ ] NFPA 231C FIGURE _____ CURVE _____

[X] OTHER (SPECIFY) NFPA 13R– 4 SPRIKLER HEAD CALCULATION

[ ] SPECIFIC RULING _____

AREA OF SPRINKLER OPERATION 4 SP. HEADS

DENSITY AS PER MFR'S LISTING

AREA PER SPRINKLER VARIES

HOSE ALLOWANCE GPM (INSIDE) 0

HOSE ALLOWANCE GPM (OUTSIDE) 100

RACK SPRINKLER ALLOWANCE N/A

SYSTEM TYPE

[X] WET [ ] DRY [ ] DELUGE [ ] PREACTION

SPRINKLER OR NOZZLE

MAKE TYCO MODEL RESIDENTIAL

SIZE 7/16" K-FACTOR 4.9 & 4.2

TEMPERATURE RATING ORDINARY

CALCULATION SUMMARY

GPM REQUIRED 161.68 PSI REQUIRED 43.03 AT WATER MAIN CONNECTION

"C" FACTOR USED: OVERHEAD 120 UNDERGROUND 120

WATER SUPPLY

WATERFLOW TEST

DATE AND TIME 06/14/06

STATIC PSI 54

RESIDUAL PSI 46

GPM FLOWING 2014

ELEVATION -3.0

PUMP DATA

RATED CAPACITY N/A

RATED PSI N/A

ELEVATION N/A

[ ] HORIZONTAL [ ] VERTICAL

TANK OR RESERVOIR

CAPACITY (GALS.) N/A

ELEVATION N/A

WELL

PROOF FLOW (GPM) N/A

LOCATION 15 STREET & JEFFERSON AVE.

SOURCE OF INFORMATION CITY OF MIAMI BEACH– FIRE PREVENTION DIVISION

PRESSURE REQUIRED @ DESIGN FLOW: 43.03 PSI
PRESSURE AVAILABLE @ DESIGN: 53.36 PSI
PRESSURE MARGIN: 10.32 PSI
SPRINKLER FLOW: 61.68 GPM
HOSE FLOW: 100 GPM
TOTAL FLOW: 161.68 GPM

6/19/06

DESIGN PROGRAM FOR SPRINKLER SYSTEMS
by
MUNICIPAL HYDRAULICS LTD, LADYSMITH, B.C. CANADA

COPYRIGHT (C) 1995 MUNICIPAL HYDRAULICS LTD

VERSION 11.00

```
  COMPANY  :  INNOVATIVE ENGINEERING
  DESIGNER :  S. GUPTA
  CLIENT   :  1529 JEFFERSON
  PROJECT  :  3 STORY CONDO- 3RD FLR. CALCULATION
  JOB NO.  :
FDESPT
MCODE=CSXL120
NOLOOP
P  101  1  2  1  3  CSAM120  TT  GV
P  102  2  3  40  3  CSAM120
P  103  3  4  15  3  CSAM120  4LE  2GV
P  104  4  5  60  3  CSAM120  LE  GV
P  105  5  6  7  2.5  CSAL120  BV  CV
P  106  6  7  27.5  2  3SE  2TT
P  107  7  21  20  2
P  108  21  22  35  1.5  3TT
P  109  22  23  7.25  1.5  TT
P  110  23  24  3  1.25  SE
P  111  24  301  2.25  1
P  112  24  302  1.33  1
P  113  23  303  1  1  TT  SE
P  114  22  25  2  1.25  TT
P  115  25  304  2  1  TT  SE
S  301  29  14  4.2
SS 301  302
S  303  28.5  16.0  4.9
SS 303  304
R  21  29
RS 21  22 23 24 25
R  7  9
RS 7  6
R  5  2
R  4  -3
R  3  -3
R  2  -3  100
BKFP 103  0 5.0  200 5.0
I  1  -3  0 54  2014  46
```

	LENGTH	DIAMETER	FLOW	HEAD	ELEVATION	PRESSURE
UNITS BEING USED:	FEET	INCHES	US GPM	FEET	FEET	PSI

HAZEN-WILLIAMS FORMULA USED

FITTINGS SPECIFIED AS NFPA

ITERATION STOPS WHEN GREATEST FLOW CHANGE IS .05000 IN ANY PIPE

MULTIPLICATIVE FACTOR OF EACH CONSUMPTION IS 1.00000

DEFAULT ROUGHNESS COEFFICIENT - C=120.0

```
THERE ARE    4 SPRINKLERS    0 BOOSTER PUMP(S) and    1 BACKFLOW PREVENTER(S)

THERE ARE   15 PIPES AND   11 REFERENCE POINTS

THERE ARE   15 PIPES AND   11 REFERENCE POINTS

THE NUMBER OF INPUT POINTS IN SYSTEM IS    1

NODE   NO. OF PUMPS    PUMP      INPUT      PUMP PARAMETERS
 NO.   IN PARALLEL   ELEVATION  FRACTION    OR X-Y COORDINATES
  1         1         -3.00      1.00        .0  2014.0
                                             54.0    46.0

PUMP DATA FOR    1 BACKFLOW PREVENTER(S) AND    0 BOOSTER PUMP(S)

PIPE   Backflow        PUMP PARAMETERS
 NO.   Preventer       OR X-Y COORDINATES
103                 .0   200.0
                   -5.0    -5.0

DESIGN POINT CALCULATION WITH MIN FLOW ASSUMED

Initial estimate of demand on the system is      160.00


   NET UNBALANCED DEMAND ON THE SYSTEM =    .00000


PIPE NO. IS   103  HEAD GAIN ACROSS PIPE =   -11.547      FLOW =    60.000      SLOPE =    .00000
Iteration #   0  Max change in flow is          4.930 in loop #   1
Iteration #   1  Max change in flow is           .548 in loop #   1
Iteration #   2  Max change in flow is           .007 in loop #   1
Iteration #   3  Max change in flow is           .000 in loop #   3
Iteration #   4  Max change in flow is           .000 in loop #   4
        NUMBER OF ITERATIONS=   5


PIPE NO. IS   103  HEAD GAIN ACROSS PIPE =   -11.547      FLOW =    74.264      SLOPE =    .00000
Iteration #   0  Max change in flow is          3.913 in loop #   1
Iteration #   1  Max change in flow is           .424 in loop #   1
Iteration #   2  Max change in flow is           .005 in loop #   1
Iteration #   3  Max change in flow is           .000 in loop #   3
Iteration #   4  Max change in flow is           .000 in loop #   2
        NUMBER OF ITERATIONS=   5


PIPE NO. IS   103  HEAD GAIN ACROSS PIPE =   -11.547      FLOW =    58.313      SLOPE =    .00000
Iteration #   0  Max change in flow is           .939 in loop #   1
Iteration #   1  Max change in flow is           .024 in loop #   1
Iteration #   2  Max change in flow is           .000 in loop #   4
Iteration #   3  Max change in flow is           .000 in loop #   4
Iteration #   4  Max change in flow is           .000 in loop #   4
        NUMBER OF ITERATIONS=   5
```

SUMMARY REPORT

COMPANY	INNOVATIVE ENGINEERING	PAGE 1 OF 1
DESIGNER	S. GUPTA	DATE 2006 JUN 19
CLIENT	1529 JEFFERSON	
PROJECT	3 STORY CONDO- 3RD FLR. CALCULATION	
JOB NO.		

DESIGN POINT CALCULATION COMPLETED

TOTAL FLOW FROM ALL REFERENCE POINTS IS		100.00	
MINIMUM FLOW OF ALL OPERATING SPRINKLER HEADS IS		14.12	
AVERAGE FLOW FROM ALL OPERATING SPRINKLER HEADS IS		15.42	
TOTAL FLOW FROM ALL OPERATING SPRINKLER HEADS IS		61.68	
TOTAL DEMAND ON THE WHOLE SYSTEM IS		161.68	
SPECIFIED AVAILABLE PRESSURE AT INPUT NODE IS		123.22	FEET
	OR	53.36	P.S.I.
REQUIRED PRESSURE FOR MINIMUM FLOW IS		99.38	FEET
	OR	43.03	P.S.I.
AVAILABLE PRESSURE MINUS REQUIRED PRESSURE IS		23.84	FEET
	OR	10.32	P.S.I.

HYDRAULIC CALCULATIONS -- PIPE CHARACTERISTICS

COMPANY	INNOVATIVE ENGINEERING		PAGE 1 OF 1
DESIGNER	S. GUPTA		DATE 2006 JUN 19
CLIENT	1529 JEFFERSON		
PROJECT	3 STORY CONDO- 3RD FLR. CALCULATION		
JOB NO.			

PIPE NO.	PIPE NODES		FLOW (US GPM)	PIPE DIAMETER NOM (IN)	PIPE DIAMETER ACTUAL (IN)	PIPE/FTG CODE	PIPE/FTG LENGTH (FT)	TOTAL LENGTH (FT)	HEAD LOSS PER FT. (PSI)	HEAD LOSS OVER PIPE (PSI)	STATIC HEAD LOSS (PSI)	TOTAL HEAD LOSS (PSI)	ROUGHNESS COEFF	WATER VELOCITY (FT/SEC)	VELOC. PRESS. (PSI)
101	1	2	161.68	3	3.07	CSAM	1.0	17.0	0.0336	0.571	0.000	0.571	120	7.017	0.331
				3		1TT	15.0								
				3		1GV	1.0								
102	2	3	61.68	3	3.07	CSAM	40.0	40.0	0.00564	0.226	0.000	0.226	120	2.677	0.0482
103	3	4	61.68	3	3.07	CSAM	15.0	37.0	0.00564	0.209	0.000	5.209	120	2.677	0.0482
				3		4LE	20.0								
				3		2GV	2.0								
						BackFlw Prev				5.0					
104	4	5	61.68	3	3.07	CSAM	60.0	66.0	0.00564	0.372	2.165	2.537	120	2.677	0.0482
				3		1LE	5.0								
				3		1GV	1.0								
105	5	6	61.68	2 1/2	2.64	CSAL	7.0	35.8	0.0118	0.424	3.031	3.455	120	3.629	0.0886
				2 1/2		1BV	9.6								
				2 1/2		1CV	19.2								
106	6	7	61.68	2	2.15	CSXL	27.5	70.3	0.0316	2.220	0.000	2.220	120	5.430	0.198
				2		3SE	18.3								
				2		2TT	24.4								
107	7	21	61.68	2	2.15	CSXL	20.0	20.0	0.0316	0.632	8.660	9.292	120	5.430	0.198
108	21	22	61.68	1 1/2	1.69	CSXL	35.0	65.1	0.104	6.763	0.000	6.763	120	8.853	0.527
				1 1/2		3TT	30.1								
109	22	23	44.73	1 1/2	1.69	CSXL	7.3	17.3	0.0573	0.990	0.000	0.990	120	6.420	0.277
				1 1/2		1TT	10.0								
110	23	24	28.27	1 1/4	1.45	CSXL	3.0	6.8	0.0508	0.348	0.000	0.348	120	5.478	0.202
				1 1/4		1SE	3.8								
111	24	301	14.12	1	1.10	CSXL	2.2	2.2	0.0534	0.120	0.000	0.120	120	4.733	0.151
112	24	302	14.15	1	1.10	CSXL	1.3	1.3	0.0536	0.0713	0.000	0.0713	120	4.743	0.151
113	23	303	16.46	1	1.10	CSXL	1.0	10.0	0.0709	0.707	-0.217	0.491	120	5.516	0.205
				1		1TT	6.4								
				1		1SE	2.6								
114	22	25	16.95	1 1/4	1.45	CSXL	2.0	9.7	0.0197	0.191	0.000	0.191	120	3.284	0.0726
				1 1/4		1TT	7.7								
115	25	304	16.95	1	1.10	CSXL	2.0	11.0	0.0749	0.822	-0.217	0.605	120	5.681	0.217
				1		1TT	6.4								
				1		1SE	2.6								

HYDRAULIC CALCULATIONS -- NODE CHARACTERISTICS

COMPANY	INNOVATIVE ENGINEERING	PAGE 1 OF 1
DESIGNER	S. GUPTA	DATE 2006 JUN 19
CLIENT	1529 JEFFERSON	
PROJECT	3 STORY CONDO- 3RD FLR. CALCULATION	
JOB NO.		

SPRINKLER/NOZZLE(N) POINTS			REFERENCE POINTS			INPUT POINTS			POINT ELEVATION (FT)	REQUIRED DISCHARGE (US GPM)	K-FACTOR
NO.	DISCHG. GPM	P.S.I.	NO.	DISCHG. GPM	P.S.I.	NO.	DEMAND GPM	P.S.I.			
						1	161.68	43.034	-3.000		
			2	100.00	42.462				-3.000	100.00	
			3		42.237				-3.000		
			4		37.028				-3.000		
			5		34.491				2.000		
			6		31.036				9.000		
			7		28.816				9.000		
			21		19.524				29.000		
			22		12.761				29.000		
			23		11.771				29.000		
			24		11.423				29.000		
			25		12.570				29.000		
301	14.12	11.303							29.000	11.00	4.200
302	14.15	11.352							29.000	14.00	4.200
303	16.46	11.280							28.500	16.00	4.900
304	16.95	11.965							28.500	16.00	4.900

MAXIMUM UNBALANCED HEAD LOSS= .00000 IN LOOP # 0

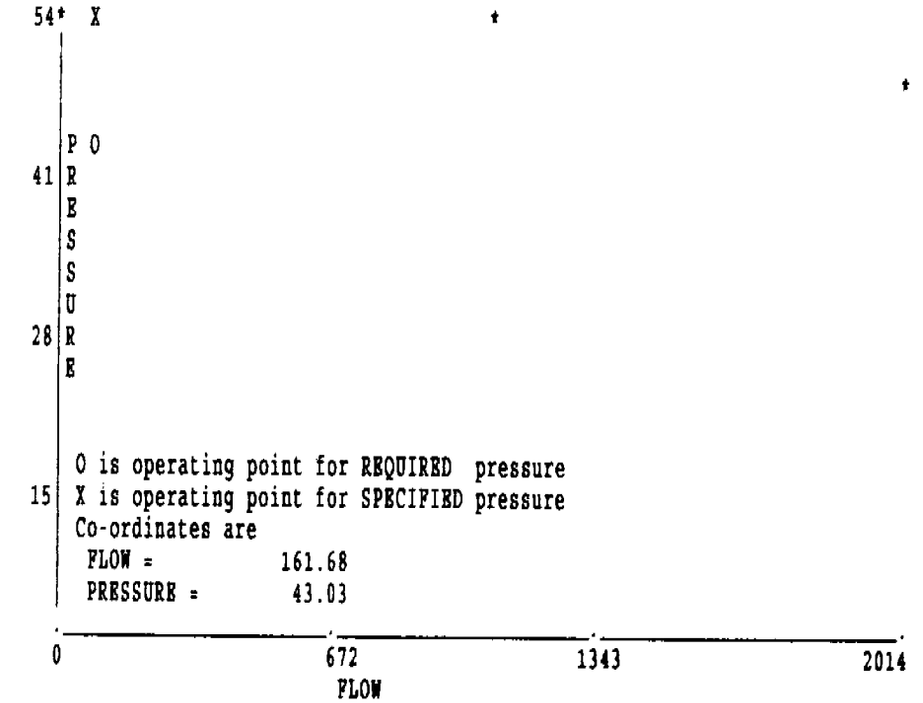

Pump Curve Input Point No. 1

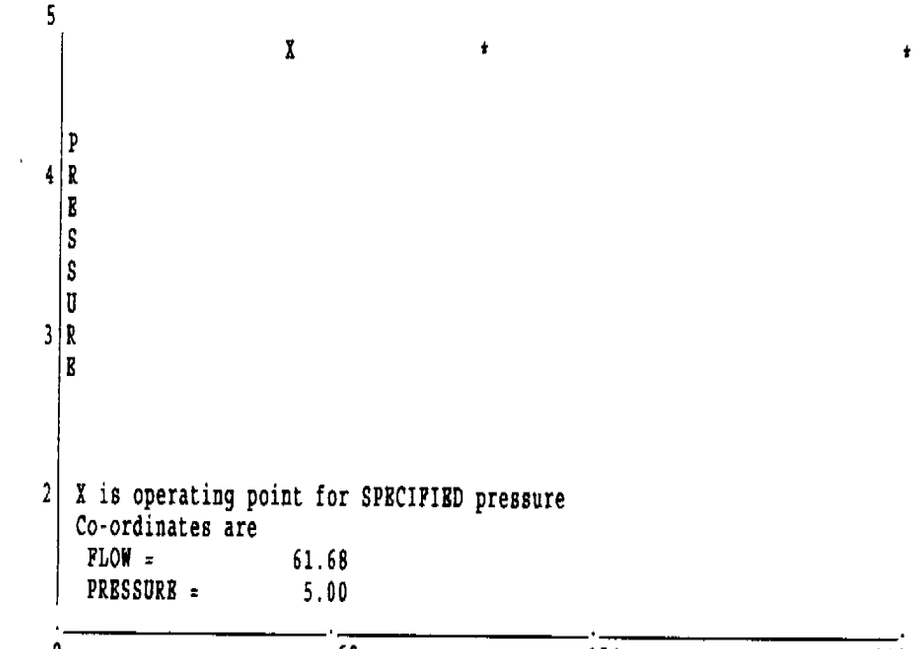

Backflow Prev. Pipe No. 103

Miami Beach Fire Department
Hydrant Flow Test Results

Address: 1529 Jefferson Ave
Date: 06-14-2006
Permit No.: FP060413

Location of Hydrant #1: 15th St & Jefferson Ave (SE) 6 in.-16 in. main (Static Hydrant)

Location of Hydrant #2: 15th St & Jefferson Av (SE) 6 in.-16 in. main

Location of Hydrant #3: 15th St & Meridian Av (SW) 20 in. main

Location of Hydrant #4: 15th St & Meridian Ave (SW) 20 in. main

Static pressure reading from Hydrant #1: **54 PSI**
(Taken before flowing water from Hydrants #2 & #3)

Residual pressure reading from Hydrant #1: **46 PSI**
(Taken after flowing water from Hydrants #2 & #3)

Hydrant #2, port 1: Pressure (pitot gauge):	10 PSI	Flow =	531 GPM
Hydrant #2, port 2: Pressure (pitot gauge):	0 PSI	Flow =	0 GPM
Hydrant #3, port 1: Pressure (pitot gauge):	20 PSI	Flow =	751 GPM
Hydrant #3, port 2: Pressure (pitot gauge):	0 PSI	Flow =	0 GPM
Hydrant #4, port 1: Pressure (pitot gauge):	19 PSI	Flow =	732 GPM
Hydrant #4, port 2: Pressure (pitot gauge):	0 PSI	Flow =	0 GPM
		Total Flow =	**2014 GPM**

Available Water (GPM) = **4152** GPM @ 20 PSI residual pressure

Test Conducted By: *Sumner, E1-B*

Important!

A copy of this test must be included with the sprinkler system plans at the time that they are submitted to the Building Department for review!

CITY OF MIAMI BEACH
BUILDING DEPARTMENT
1700 CONVENTION CENTER DRIVE
2ND FLOOR - CITY HALL
MIAMI BEACH, FL 33139

NOTICE TO THE CITY OF MIAMI BEACH BUILDING DEPARTMENT OF EMPLOYMENT AS SPECIAL INSPECTOR UNDER THE FLORIDA BUILDING CODE

I, (we) have been retained by: MICHAEL BENAMOU to perform special inspector services under the Florida Building Code at the 1529 Jefferson Ave project on the below listed structures as of 12-7-6 (date). I am a professional engineer licensed in the State of Florida.

Process Number: B0605108 **Master Permit (IF APPLICABLE):** _____

- ○ Special Inspector for Pilings, FBC 1822.1.20
- ○ Special Inspector for Soil Compaction, FBC 1820.3.1
- ○ Special Inspector for Precast Attachments, FBC 1927.12.2 (By P.E. or R.A..)
- ● Special Inspector for Reinforced Masonry, FBC 2122.4
- ● Special inspection for Steel Bolted & Welded Connections, FBC 2218.2 (By P.E. or R.A..)
- ○ Special Inspector for Trusses over 35 feet long or 6 feet high, FBC 2319.17.2.4.2 (By P.E. or R. A..)
- ○ Special Inspector for _____

NOTE: Only the marked boxes apply.

The following individual's) employed by this firm or me are authorized representatives to perform inspections*

1. SAM LYUBKIN
2. _____
3. _____
4. _____

***NOTE: FBC 2001 HVZ sections 1927.12.2, 2218.2, 2319.17.4.2 requires either a Registered professional Engineer or Registered Architect to perform the actual inspections.**

I, (we) will notify the City of Miami Beach Building Department of any changes regarding authorized personnel performing inspection services.

I, (we) understand that a Special Inspection Log for each building must be displayed in a convenient location on the site for reference by the City of Miami Beach Building Department Inspector. All mandatory inspections, as required of the Florida Building Code, Inspection performed by the Special inspector hired by the Owner are in addition to the mandatory inspections performed by the Building Department. Further, upon completion of the work under each building permit, I will submit to the Building Inspector at the time of final inspection the completed Inspection Log form and sealed statement that, to the best of my knowledge, belief and professional judgment those portions outlined above meet the intent of the Florida Building Code and are in subsequent accordance with the approved plans.

Signed and Sealed
34306 FL
License Number

Date: 7-29-06

Architect/Engineer Signature: _____
Architect/Engineer Name Printed: SAMUEL LYUBKIN
Address: 2632 Hollywood Blvd #107
Phone Number: (954) 922-8845
Owner/Agent Signature: _____
Owner/Agent Name Printed: _____
Building Department Accepted By: L Perez 10/3/07

CITY OF MIAMI BEACH
BUILDING DEPARTMENT
1700 CONVENTION CENTER DRIVE
2ND FLOOR - CITY HALL
MIAMI BEACH, FL 33139

NOTICE TO THE CITY OF MIAMI BEACH BUILDING DEPARTMENT OF EMPLOYMENT AS SPECIAL INSPECTOR UNDER THE FLORIDA BUILDING CODE

I, (we) have been retained by: 3Design Inc. Architecture to perform special inspector services under the Florida Building Code at the 1529 Jefferson Avenue project on the below listed structures as of 7-27-06 (date). I am a Professional Engineer or Architect licensed in the State of Florida.

Process Number: B0605106 **Master Permit (IF APPLICABLE):** _____

- ☑ Special Inspector for Pilings, FBC 1822.1.20
- ☑ Special Inspector for Soil Compaction, FBC 1820.3.1
- ☐ Special Inspector for Precast Attachments, FBC 1927.12.2 (By P.E. or R.A..)
- ☐ Special Inspector for Reinforced Masonry, FBC 2122.4
- ☐ Special inspection for Steel Bolted & Welded Connections, FBC 2218.2 (By P.E. or R.A..)
- ☐ Special Inspector for Trusses over 35 feet long or 6 feet high, FBC 2319.17.2.4.2 (By P.E. or R.A..)
- ☐ Special Inspector for _____

NOTE: Only the marked boxes apply.

The following individual's employed by this firm or me are authorized representatives to perform inspections*

1. Wissam Naamani, P.E.
2. _____
3. _____
4. _____

***NOTE: FBC 2001 HVZ sections 1927.12.2, 2218.2, 2319.17.4.2 requires either a Registered professional Engineer or Registered Architect to perform the actual inspections.**

I, (we) will notify the City of Miami Beach Building Department of any changes regarding authorized personnel performing inspection services.

I, (we) understand that a Special Inspection Log for each building must be displayed in a convenient location on the site for reference by the City of Miami Beach Building Department Inspector. All mandatory inspections, as required of the Florida Building Code, Inspection performed by the Special inspector hired by the Owner are in addition to the mandatory inspections performed by the Building Department. Further more, upon completion of the work under each building permit, I will submit to the Building Inspector at the time of final inspection the completed Inspection Log form and sealed statement that, to the best of my knowledge, belief and professional judgment those portions outlined above meet the intent of the Florida Building Code and are in subsequent accordance with the approved plans.

Architect/Engineer Signature: Wissam 7-27-06

Architect/Engineer Name Printed: Wissam Naamani, P.E.

Address: 750 W. 84 Street, Hialeah, FL 33014

Phone Number: (305) 828-7499

Owner/Agent Signature: _____

Owner/Agent Name Printed: L Perez 10/3/07

Building Department

Wissam
Signed and Sealed

39584
License Number

7-27-06

SAM LYUBKIN, P.E.
CONSULTING ENGINEER, P.E. 34306 FL

Forum Building
2632 Hollywood Boulevard, Suite 103
Hollywood, Florida 33020
(954) 922-8845

12-11-06

NEW BLDG. FOR 1529 JEFFERSON AVE, M.B.

TABLE OF CONTENT:

1). WIND PRESSURES: FBC 2004 (146 MPH)

a). Roof

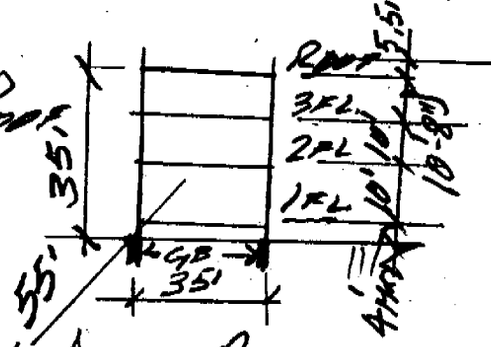

(2 ÷ 5)

b). Wall Opens:

$A_1 < 10 ft^2$; $A_2 = 10 \div 20 ft^2$; $A_3 = 20 \div 30 ft^2$; $A_4 > 30 ft^2$

c). Main Wind.

2) Lateral Analysis (P.6)

3) Slabs (P7 ÷ 32)

4) Beams - Columns (P.33 ÷ 46)

5) Gravity Loads - Foundation (P. 47 ÷ 52)

6). Walls - Fensa Masonry Wall's (P53 ÷ 62)

7) Stairs; Parapets; • Grade Beams; (P63 ÷ 69)
• Retaining Walls

WIND02 v2-10

Detailed Wind Load Design (Method 2) per ASCE 7-02

Analysis by: sl **Company Name:** sam lyubkin,p.e.

Description: 1529 jefferson ave.,m.b.

User Input Data		
Structure Type	Building	
Basic Wind Speed (V)	146	mph
Struc Category (I, II, III, or IV)	II	
Exposure (B, C, or D)	C	
Struc Nat Frequency (n1)	1	Hz
Slope of Roof	0.0	:12
Slope of Roof (Theta)	0.0	Deg
Type of Roof	Monoslope	
Kd (Directonality Factor)	1	
Eave Height (Eht)	35.00	ft
Ridge Height (RHt)	35.00	ft
Mean Roof Height (Ht)	35.00	ft
Width Perp. To Wind Dir (B)	55.00	ft
Width Paral. To Wind Dir (L)	35.00	ft

Calculated Parameters		
Importance Factor	1	
Hurricane Prone Region (V>100 mph)		
Table 6-2 Values		
Alpha =	9.500	
zg =	900.000	
At =	0.105	
Bt =	1.000	
Bm =	0.650	
Cc =	0.200	
l =	500.00	ft
Epsilon =	0.200	
Zmin =	15.00	ft

Calculated Parameters	
Type of Structure	
Height/Least Horizontal Dim	1.00
Flexible Structure	No

Gust Factor Category I: Rigid Structures - Simplified Method			
Gust1	For rigid structures (Nat Freq > 1 Hz) use 0.85	0.85	
Gust Factor Category II: Rigid Structures - Complete Analysis			
Zm	0.6 * Ht	21.00	ft
Izm	Cc * (33/z)^0.167	0.2157	
Lzm	l*(zm/33)^Epsilon	456.78	ft
Q	(1/(1+0.63*((Min(B,L)+Ht)/Lzm)^0.63))^0.5	0.9154	
Gust2	0.925*((1+1.7*Izm*3.4*Q)/(1+1.7*3.4*Izm))	0.8816	
Gust Factor Summary			
G	Since this is not a flexible structure the lessor of Gust1 or Gust2 are used	0.85	

Fig 6-5 Internal Pressure Coefficients for Buildings, Gcpi

Condition	Gcpi	
	Max +	Max -
Open Buildings	0.00	0.00
Partially Enclosed Buildings	0.55	-0.55
Enclosed Buildings	0.18	-0.18
Enclosed Buildings	**0.18**	**-0.18**

Developed by Meca Enterprises, Inc. Copyright 2006

??

WIND02 v2-10

Detailed Wind Load Design (Method 2) per ASCE 7-02

6.5.12.2.1 Design Wind Pressure - Buildings of All Heights

Elev	Kz	Kzt	qz	Pressure (lb/ft^2)	
				Windward Wall*	
0			lb/ft^2	+GCpi	-GCpi
35	1.01	1.00	55.37	27.68	47.62
30	0.98	1.00	53.60	26.48	46.41
20	0.90	1.00	49.21	23.50	43.43
15	0.85	1.00	46.32	21.53	41.47

Figure 6-6 - External Pressure Coefficients, Cp

Loads on Main Wind-Force Resisting Systems (Method 2)

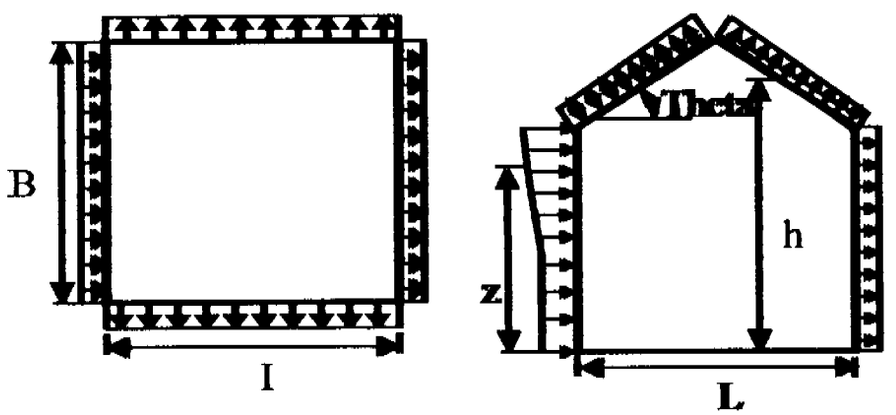

Variable	Formula	Value	Units
Kh	2.01*(Ht/zg)^(2/Alpha)	1.01	
Kht	Topographic factor (Fig 6-4)	1.00	
Qh	.00256*(V)^2*I*Kh*Kht*Kd	55.37	psf
Khcc	Comp & Clad: Table 6-3 Case 1	1.01	
Qhcc	.00256*V^2*I*Khcc*Kht*Kd	55.37	psf

Wall Pressure Coefficients, Cp	
Surface	Cp
Windward Wall (See Figure 6.5.12.2.1 for Pressures)	0.8

Roof Pressure Coefficients, Cp	
Roof Area (sq. ft.)	-
Reduction Factor	1.00

Calculations for Wind Normal to 55 ft Face *Additional Runs may be req'd for other wind directions*	Cp	Pressure (psf) +GCpi	 -GCpi
Leeward Walls (Wind Dir Normal to 55 ft wall)	-0.50	-33.50	-13.57
Leeward Walls (Wind Dir Normal to 35 ft wall)	-0.39	-28.12	-8.19
Side Walls	-0.70	-42.91	-22.98
Overhang Bottom (Applicable on Windward only)	0.80	37.65	37.65
Roof - Wind Normal to Ridge (Theta<10) - for Wind Normal to 55 ft face			
Dist from Windward Edge: 0 ft to 70 ft - Max Cp	-0.18	-18.44	1.49
Dist from Windward Edge: 0 ft to 17.5 ft - Min Cp	-1.30	-71.15	-51.22

WIND02 v2-10

Detailed Wind Load Design (Method 2) per ASCE 7-02

Dist from Windward Edge: 17.5 ft to 35 ft - Min Cp	-0.70	-42.91	-22.98
Dist from Windward Edge: 35 ft to 55 ft - Min Cp	-0.70	-42.91	-22.98
Roof - Wind Parallel to Ridge (All Theta) - for Wind Normal to 35 ft face			
Dist from Windward Edge: 0 ft to 70 ft - Max Cp	-0.18	-18.44	1.49
Dist from Windward Edge: 0 ft to 17.5 ft - Min Cp	-1.01	-57.46	-37.52
Dist from Windward Edge: 17.5 ft to 35 ft - Min Cp	-0.85	-49.76	-29.82
Dist from Windward Edge: 35 ft to 55 ft - Min Cp	-0.55	-36.07	-16.13

* Horizontal distance from windward edge

Figure 6-10 - External Pressure Coefficients, GCpf

Loads on Main Wind-Force Resisting Systems w/ Ht <= 60 ft

Kh =	2.01*(Ht/zg)^(2/Alpha)	=	1.01
Kht =	Topographic factor (Fig 6-2)	=	1.00
Qh =	0.00256*(V)^2*ImpFac*Kh*Kht*Kd	=	55.37
Theta =	Angle of Roof	=	0.0 Deg

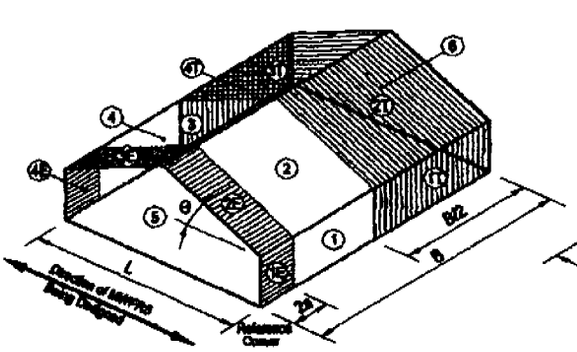

Transverse Direction

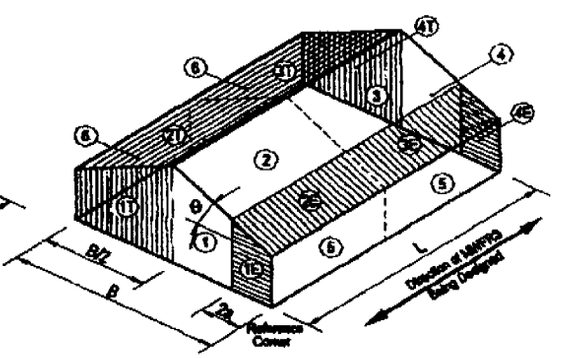

Longitudinal Direction

Torsional Load Cases

Wind Pressures on Main Wind Force Resisting System						
Surface	GCpf	+GCpi	-GCpi	qh (psf)	Min P (psf)	Max P (psf)
1	0.40	0.18	-0.18	55.37	12.18	32.11
2	-0.69	0.18	-0.18	55.37	-48.17	-28.24
3	-0.37	0.18	-0.18	55.37	-30.45	-10.52
4	-0.29	0.18	-0.18	55.37	-26.02	-6.09
5	-0.45	0.18	-0.18	55.37	-34.88	-14.95
6	-0.45	0.18	-0.18	55.37	-34.88	-14.95
1E	0.61	0.18	-0.18	55.37	23.81	43.74
2E	-1.07	0.18	-0.18	55.37	-69.21	-49.28
3E	-0.53	0.18	-0.18	55.37	-39.31	-19.38
4E	-0.43	0.18	-0.18	55.37	-33.77	-13.84

* p = qh * (GCpf - GCpi)

Developed by Meca Enterprises, Inc. Copyright 2006

??

WIND02 v2-10

Detailed Wind Load Design (Method 2) per ASCE 7-02

Figure 6-11 - External Pressure Coefficients, GCp

Loads on Components and Cladding for Buildings w/ Ht <= 60 ft

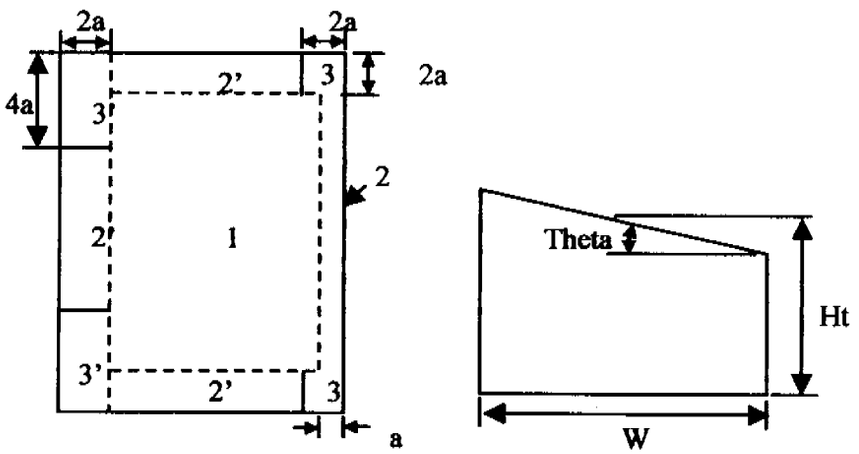

Note: The image shows a Gabled roof, but Fig 6-11 also applies to some monoslope cases

a = 3.5 ==> 3.50 ft

Double Click on any data entry line to receive a help Screen

Component	Width (ft)	Span (ft)	Area (ft^2)	Zone	GCp		Wind Press (lb/ft^2)	
					Max	Min	Max	Min
			10.00	1	0.30	-1.00	26.58	-65.33
			10.00	2	0.30	-1.80	26.58	-109.63
			5.00	4	0.90	-0.99	59.80	-64.78
			5.00	5	0.90	-1.26	59.80	-79.73
			12.00	4	0.89	-0.98	59.10	-64.08
			12.00	5	0.89	-1.23	59.10	-78.34
			20.00	4	0.85	-0.94	57.15	-62.13
			20.00	5	0.85	-1.16	57.15	-74.43
			30.00	4	0.82	-0.91	55.60	-60.58
			30.00	5	0.82	-1.11	55.60	-71.33

Note: * Enter Zone 1 through 5, or 1H through 3H for overhangs.

Developed by Meca Enterprises, Inc. Copyright 2006

??

2) a). 8" PERIMETER BRICK WALLS PLUS MID WALL W/ WALLS AROUND STAIR ENOUGH FOR LATERAL WIND TRANSFER WITHOUT CALCULATIONS, 3 STORY BUILDING.

*ALL WALLS GOING DIRECTLY TO THE GRADE BEAMS.

*WIND TRANSFER - FLOORS CONCRETE SLABS W/ $\frac{W}{L}$ RATIO:

$= \frac{35'}{55'} \approx .64$ - OK.

3). SLABS

a) ROOF TERRACES (10" SLABS): TOP COVER = 2"
BOTT. " = 2"

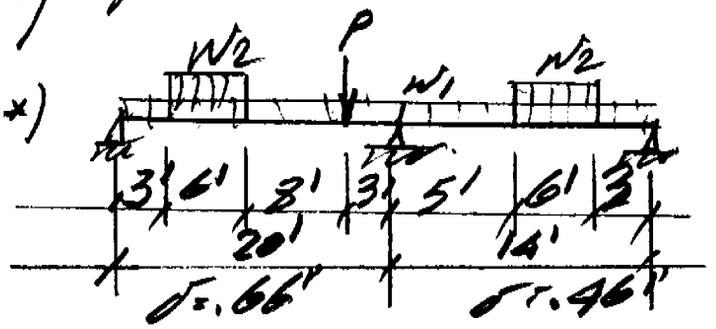

W_1 { LL = 100 PSF
ADD. DL = (40" + 45"): = 85 PSF ← INTERIOR CONCRETE FOR SLAB

W_2 { LL = 0
ADL = 40 PSF - JACUZZY

P { LL = 0
ADL = (.065 × 5) ≈ .35 K/F
↳ PARAPET

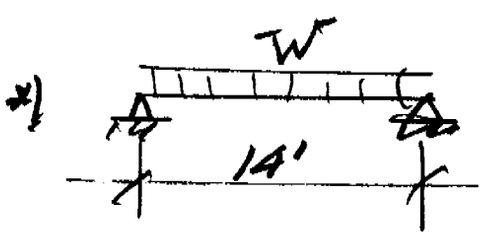

W { LL = 100 PSF
ADL = 85 PSF

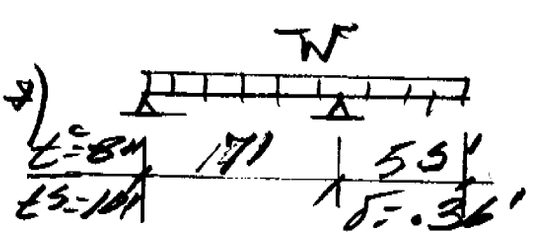

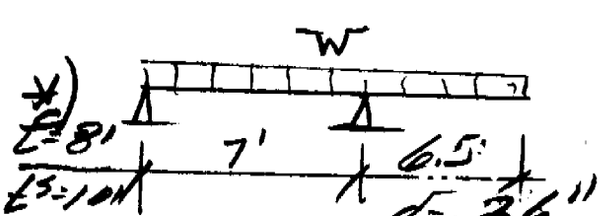

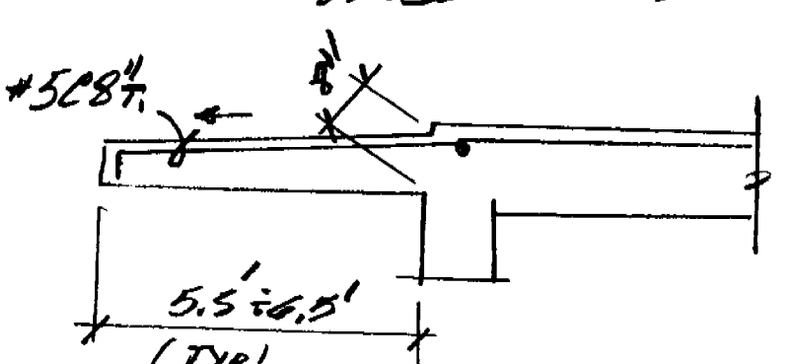

b). 3rd & 2nd Floor Slabs (8" SLABS):

*) 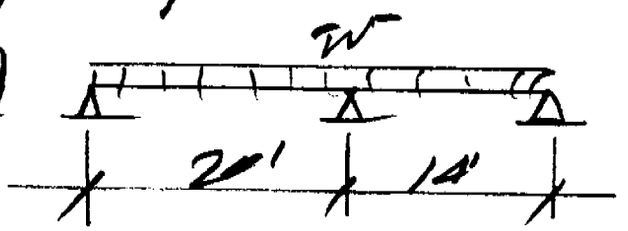

W { LL = 40 PSF, SDD. DL = 40 PSF } TYP
{ TOP COVER = 1½" , BOTT. — " — = 1½" }

*) 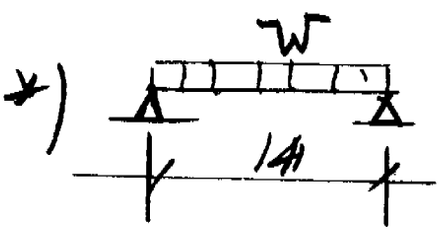

*) 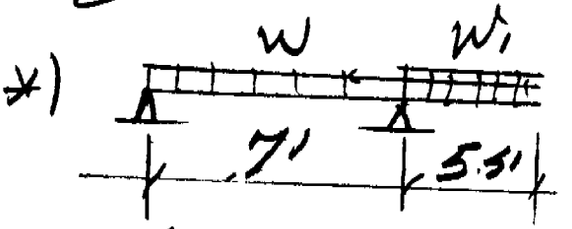

W1 { LL = 100 PSF, ADL = 40 PSF

*) 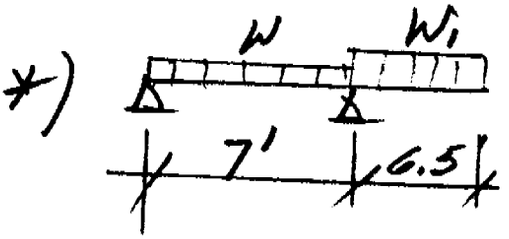

*) 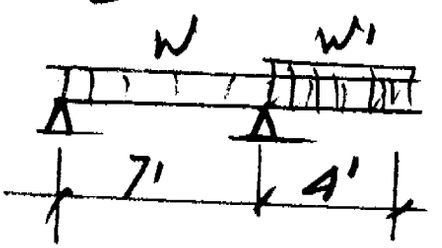

c). 1st. Floor Slab (8") - TOP COVER = 1½"
BOTT. — " — = 3"

*) 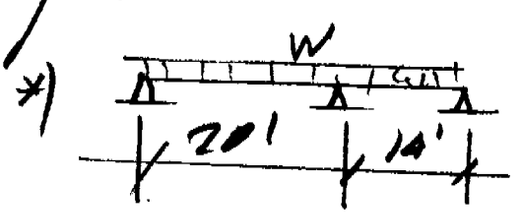

*) 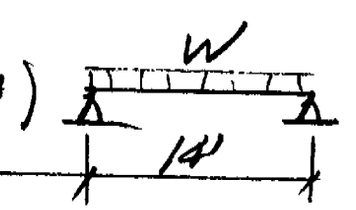

*) 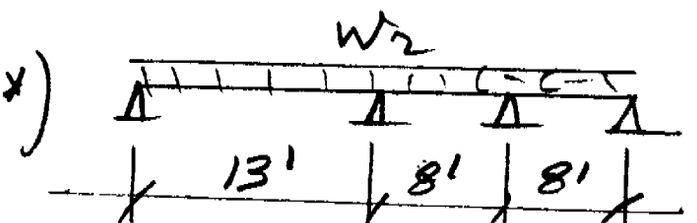

W2 { LL = 100 PSF, ADL = 85 PSF

*) ALL OTHER SLABS - MIN. REINF.

a)

page 69

Title :
Dsgnr:
Description :

Job #
Date: 10:53AM, 13 NOV 06

Scope :

Multi-Span Concrete Beam

Description Roof Terrace

General Information

Code Ref: ACI 318-02, 1997 UBC, 2003 IBC, 2003 NFPA 5000

Fy	60,000.0 psi	Spans Considered Continuous Over Supports		ACI Dead Load Factor	1.40
fc	5,000.0 psi	Stirrup Fy	40,000.0 psi	ACI Live Load Factor	1.70

Concrete Member Information

Description			span1	span2
Span		ft	20.00	14.00
Beam Width		in	12.00	12.00
Beam Depth		in	10.00	10.00
End Fixity			Pin-Pin	Pin-Pin
Reinforcing	Center	Area	1.20in2	0.44in2
		Bar Depth	7.50in	7.50in
	Left	Area		1.20in2
		Bar Depth		2.50in
	Right	Area	1.20in2	
		Bar Depth	2.50in	

Loads

Using Live Load This Span ??		Yes	Yes
Dead Load	k/ft	0.210	0.210
Live Load	k/ft	0.100	0.100
Dead Load	k/ft	0.315	0.315
Live Load	k/ft		
Start	ft	3.000	5.000
End	ft	9.000	11.000
Point #1 DL	k	0.350	
LL	k		
@ X	ft	17.000	0.000

Results

		Beam OK	Beam OK
Mmax @ Cntr	k-ft	22.12	7.99
@ X =	ft	7.33	9.33
Mn * Phi	k-ft	36.40	14.28
Max @ Left End	k-ft	0.00	-25.67
Mn * Phi	k-ft	0.00	36.40
Max @ Right End	k-ft	-25.67	0.00
Mn * Phi	k-ft	36.40	0.00
		Bending OK	Bending OK
Shear @ Left	k	5.28	6.22
Shear @ Right	k	7.13	2.93

Reactions & Deflections

DL @ Left	k	2.80	6.89
LL @ Left	k	0.80	2.18
Total @ Left	k	3.60	9.07
DL @ Right	k	6.89	1.58
LL @ Right	k	2.18	0.42
Total @ Right	k	9.07	2.00
Max. Deflection	in	-0.565	-0.091
@ X =	ft	8.67	9.24
Inertia : Effective	in4	370.79	238.91

Title :
Dsgnr:
Description :

Job #
Date: 10:53AM, 13 NOV 06

Scope :

Multi-Span Concrete Beam

Description Roof Terrace

Shear Stirrups

Stirrup Rebar Area	in2	0.200	0.200
Spacing @ Left	in	Not Req'd	Not Req'd
Spacing @ .2*L	in	Not Req'd	Not Req'd
Spacing @ .4*L	in	Not Req'd	Not Req'd
Spacing @ .6*L	in	Not Req'd	Not Req'd
Spacing @ .8*L	in	Not Req'd	Not Req'd
Spacing @ Right	in	Not Req'd	Not Req'd

Query Values

Location	ft	0.00	0.00
Moment	k-ft	0.0	-25.7
Shear	k	5.3	6.2
Deflection	in	0.0000	0.0000

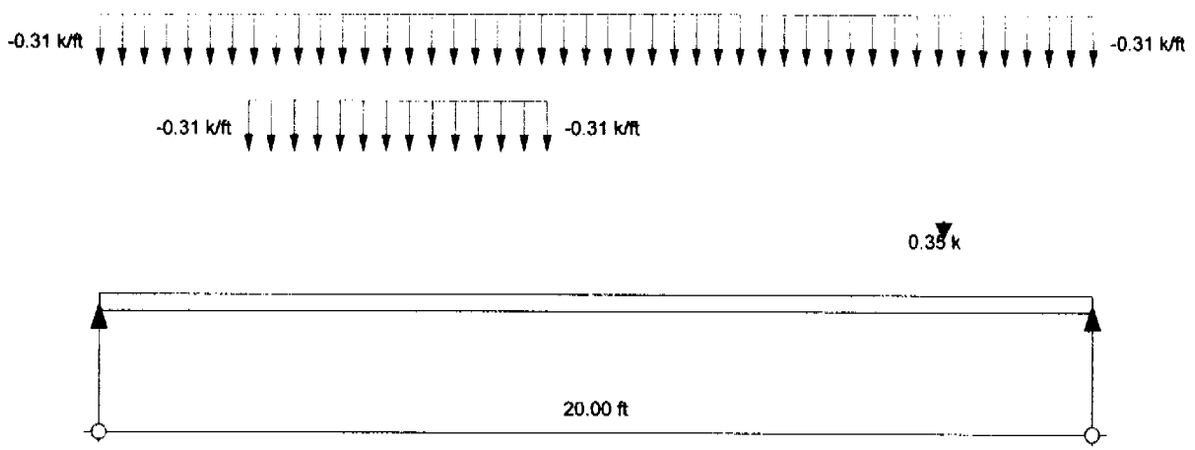

Mu:Max = 22.11 k-ft at 7.33 ft from left

Dmax = -0.5645 in at 8.66 ft from left

DL Reaction = 2.798 k

LL Reaction = 0.802 k

Total Reaction = 3.601 k

Mu:max @ right = -25.67 k-ft

DL Reaction = 6.888 k

LL Reaction = 2.179 k

Total Reaction = 9.068 k

P12 of 69

Title :
Dsgnr:
Description :

Job #
Date: 11:14AM, 13 NOV 06

Scope :

Concrete Rectangular & Tee Beam Design

Description Roof Terrace

General Information

Code Ref: ACI 318-02, 1997 UBC, 2003 IBC, 2003 NFPA 5000

Span	14.00 ft	f'c	5,000 psi
Depth	10.000 in	Fy	60,000 psi
Width	12.000 in	Concrete Wt.	145.0 pcf
		Seismic Zone	0
		End Fixity	Pinned-Pinned
Beam Weight Added Internally		Live Load acts with Short Term	

Reinforcing

Rebar @ Center of Beam...				Rebar @ Left End of Beam...				Rebar @ Right End of Beam...			
	Count	Size	'd' from Top		Count	Size	'd' from Top		Count	Size	'd' from Top
#1	1	6	7.50 in	#1	1	6	7.50 in	#1	1	6	7.50 in

Load Factoring

Note: Load factoring supports 2003 IBC and 2003 NFPA 5000 by virtue of their references to ACI 318-02 for concrete design. Factoring of entered loads to ultimate loads within this program is according to ACI 318-02 C.2

Uniform Loads

	Dead Load	Live Load	Short Term	Start	End
#1	0.085 k	0.100 k	k	0.000 ft	14.000 ft

Summary

Beam Design OK

Span = 14.00ft, Width= 12.00in Depth = 10.00in

Maximum Moment : Mu	11.23 k-ft	Maximum Deflection	-0.0656 in
Allowable Moment : Mn*phi	14.28 k-ft		
Maximum Shear : Vu	2.92 k	Max Reaction @ Left	2.14 k
Allowable Shear : Vn*phi	26.12 k	Max Reaction @ Right	2.14 k

Shear Stirrups...

Stirrup Area @ Section 0.220 in2

Region	0.000	2.333	4.667	7.000	9.333	11.667	14.000 ft
Max. Spacing	Not Req'd	Not Req'd	Not Req'd	Not Req'd	Not Req'd	Not Req'd	Not Req'd in
Max Vu	2.925	2.155	1.078	1.052	1.052	2.130	2.699 k

Bending & Shear Force Summary

Bending...	Mn*Phi	Mu, Eq. C-1	Mu, Eq. C-2	Mu, Eq. C-3
@ Center	14.28 k-ft	11.23 k-ft	8.42 k-ft	4.54 k-ft
@ Left End	14.28 k-ft	0.00 k-ft	0.00 k-ft	0.00 k-ft
@ Right End	14.28 k-ft	0.00 k-ft	0.00 k-ft	0.00 k-ft
Shear...	**Vn*Phi**	**Vu, Eq. C-1**	**Vu, Eq. C-2**	**Vu, Eq. C-3**
@ Left End	26.12 k	2.92 k	2.19 k	1.18 k
@ Right End	26.12 k	2.90 k	2.17 k	1.17 k

Deflection

Deflections...	Upward			Downward		
DL + [Bm Wt]	0.0000 in	at	14.0000 ft	-0.0441 in	at	7.0000 ft
DL + LL + [Bm Wt]	0.0000 in	at	14.0000 ft	-0.0656 in	at	7.0000 ft
DL + LL + ST + [Bm Wt]	0.0000 in	at	14.0000 ft	-0.0656 in	at	7.0000 ft

Reactions...	@ Left	@ Right
DL + [Bm Wt]]	1.441 k	1.441 k
DL + LL + [Bm Wt]	2.141 k	2.141 k
DL + LL + ST + [Bm Wt]	2.141 k	2.141 k

Title :
Dsgnr:
Description :

Job #
Date: 11:14AM, 13 NOV 06

Scope :

Description Roof Terrace

Section Analysis

Evaluate Moment Capacity...	Center	Left End	Right End
X : Neutral Axis	0.645 in	0.645 in	0.645 in
a = beta * Xneutral	0.516 in	0.516 in	0.516 in
Compression in Concrete	26.316 k	26.316 k	26.316 k
Sum [Steel comp. forces]	0.000 k	0.000 k	0.000 k
Tension in Reinforcing	-26.400 k	-26.400 k	-26.400 k
Find Max As for Ductile Failure...			
X-Balanced	4.439 in	4.439 in	4.4388 in
Xmax = Xbal * 0.75	3.329 in	3.329 in	3.329 in
a-max = beta * Xbal	3.551 in	3.551 in	3.551 in
Compression in Concrete	135.827 k	135.827 k	135.827 k
Sum [Steel Comp Forces]	0.000 k	0.000 k	0.000 k
Total Compressive Force	135.827 k	135.827 k	135.827 k
AS Max = Tot Force / Fy	2.264 in2	2.264 in2	2.264 in2
Actual Tension As	0.440 OK	0.000 OK	0.000 OK

Additional Deflection Calcs

Neutral Axis	1.745 in	Mcr	8.84 k-ft
Igross	1,000.00 in4	Ms:Max DL + LL	7.49 k-ft
Icracked	126.11 in4	R1 = (Ms:DL+LL)/Mcr	1.180
Elastic Modulus	4,030.5 ksi	Ms:Max DL+LL+ST	7.49 k-ft
Fr = 7.5 * f'c^.5	530.330 psi	R2 = (Ms:DL+LL+ST)/Mcr	1.180
Z:Cracking	188.668 k/in	I:eff... Ms(DL+LL)	1,000.000 in4
Z:cracking > 175 : No Good!		I:eff... Ms(DL+LL+ST)	1,000.000 in4
Eff. Flange Width	12.00 in		

ACI Factors (per ACI 318-02, applied internally to entered loads)

ACI C-1 & C-2 DL	1.400	ACI C-2 Group Factor	0.750	Add'l "1.4" Factor for Seismic	1.400
ACI C-1 & C-2 LL	1.700	ACI C-3 Dead Load Factor	0.900	Add'l "0.9" Factor for Seismic	0.900
ACI C-1 & C-2 ST	1.700	ACI C-3 Short Term Factor	1.300		
....seismic = ST * :	1.100				

P1 4 of 69

RC-BEAM CONCRETE BEAM DESIGN (VER 1.0)

ROOF TERRACE

TIME: 2:12 PM
DATE: 11-13-2006

File Name: UNTITLED

GENERAL CRITERIA:

Beam Concrete Strength	= 5.00 ksi	Design as Bm, Slab, Jst (BSJ)	= S
Column Concrete Strength	= 5.00 ksi	Include Beam Weight (Y/N)	= Y
Steel Yield Strength	= 60.0 ksi	Concrete Weight	= 145 pcf
Ultimate Dead Load Factor	= 1.40	Shear Reinf.: Bar Size	=#3
Ultimate Live Load Factor	= 1.70	No. of Legs	= 2
Pattern Live Loads (Y/N)	= N	Conc. Cover to Reinf.: Top	= 2.00 in.
% of Live Load to Pattern	= 100	Bot	= 2.00 in.
Left Span Cantilever (Y/N)	= N		
Right Span Cantilever (Y/N)	= Y	Deflection: Compression stl.	= 0.00 in2
Left Span Fixed (Y/N)	= N		
Right Span Fixed (Y/N)	= N		

SPAN GEOMETRY:

SLABS

Span	Length (ft)	Depth (in) (overall)	Stem Width (in) Base	Root	Flange (in) Width	Thickness
1	7.00	10.00	12.00	12.00	12.00	0.00
2	6.50 / 5.5	8.00	12.00	12.00	12.00	0.00

COLUMNS/SUPPORTS

Joint No.	Lower Col. Width (in)	Depth (in)	Height (ft)	Upper Col. Width (in)	Depth (in)	Height (ft)
1	PINNED SUPPORT					
2	PINNED SUPPORT					
3	CANTILEVER					

RC-BEAM CONCRETE BEAM DESIGN (VER 1.0)

ROOF TERRACE

SPAN LOADS:

Span	Dead Load	Live Load	Beam Wt.
	UNIFORM LOADS (k/ft)		
1	0.08	0.10	0.12
2	0.08	0.10	0.10

Span	Dead Load	Live Load	Dist.(ft)
	CONCENTRATED LOADS (kips)		

	Dead		Live		Distance (ft)	
Span	Start	End	Start	End	Start	End
	PARTIAL LOADS (k/ft)					

Distance is measured from the left support.

RC-BEAM CONCRETE BEAM DESIGN (VER 1.0)

ROOF TERRACE

BEAM END FORCES:

SPAN	MAX. Vu @ d (k)	STIR. (in.oc)	MAX. Mu+ (ft-k)	AREA STL. (in^2)	MAX. Mu- (ft-k)	AREA STL. (in^2)	DEFL. (inches)
1	2.58	none	0.11	0.00	-8.96	0.25	-0.007
2	2.55	none	0.00	0.00	-8.96	0.34	0.128

COLUMN JOINT FORCES:

JOINT	MOMENTS		REACTIONS	
	COLUMN ABOVE (ft-kip)	COLUMN BELOW (ft-kip)	SERVICE DL (kips)	SERVICE LL (kips)
1	PINNED SUPPORT		0.17	0.05
2	PINNED SUPPORT		2.45	1.30
3	CANTILEVER		0.00	0.00

NOTES: Shear force is determined at "d" from face of support.
Moments are positive if they cause compression in the top.
Deflections are positive DOWN.

Deflections are calculated using unfactored sustained loads.
Sustained load = 100% dead load plus 50% live load.

b1

P17 of 69

Title :
Dsgnr:
Description :

Scope :

Job #
Date: 11:00AM, 13 NOV 06

Multi-Span Concrete Beam

Description 3rd & 2nd Floors

General Information

Code Ref: ACI 318-02, 1997 UBC, 2003 IBC, 2003 NFPA 5000

Fy	60,000.0 psi	Spans Considered Continuous Over Supports		ACI Dead Load Factor	1.40
f'c	4,000.0 psi	Stirrup Fy	40,000.0 psi	ACI Live Load Factor	1.70

Concrete Member Information

Description			span1	span2
Span		ft	20.00	14.00
Beam Width		in	12.00	12.00
Beam Depth		in	8.00	8.00
End Fixity			Pin-Pin	Pin-Pin
Reinforcing	Center	Area	0.44in2	0.30in2
		Bar Depth	6.00in	6.00in
	Left	Area		0.60in2
		Bar Depth		2.00in
	Right	Area	0.60in2	
		Bar Depth	2.00in	

Loads

Using Live Load This Span ??		Yes	Yes
Dead Load	k/ft	0.140	0.140
Live Load	k/ft	0.040	0.040

Results

		Beam OK	Beam OK
Mmax @ Cntr	k-ft	8.50	2.30
@ X =	ft	8.00	9.80
Mn * Phi	k-ft	11.23	7.76
Max @ Left End	k-ft	0.00	-10.43
Mn * Phi	k-ft	0.00	14.98
Max @ Right End	k-ft	-10.43	0.00
Mn * Phi	k-ft	14.98	0.00
		Bending OK	Bending OK
Shear @ Left	k	2.12	2.59
Shear @ Right	k	3.16	1.10

Reactions & Deflections

DL @ Left	k	1.12	3.05
LL @ Left	k	0.32	0.87
Total @ Left	k	1.44	3.92
DL @ Right	k	3.05	0.58
LL @ Right	k	0.87	0.17
Total @ Right	k	3.92	0.75
Max. Deflection	in	-0.402	0.029
@ X =	ft	8.93	2.43
Inertia : Effective	in4	238.82	224.18

Shear Stirrups

Stirrup Rebar Area	in2	0.200	0.200
Spacing @ Left	in	Not Req'd	Not Req'd
Spacing @ .2*L	in	Not Req'd	Not Req'd
Spacing @ .4*L	in	Not Req'd	Not Req'd
Spacing @ .6*L	in	Not Req'd	Not Req'd
Spacing @ .8*L	in	Not Req'd	Not Req'd
Spacing @ Right	in	Not Req'd	Not Req'd

P18-69

Title :
Dsgnr:
Description :

Job #
Date: 11:00AM, 13 NOV 06

Scope :

Description 3rd & 2nd Floors

Query Values

Location	ft	0.00	0.00
Moment	k-ft	0.0	-10.4
Shear	k	2.1	2.6
Deflection	in	0.0000	0.0000

P19 of 69

Title :
Dsgnr:
Description :

Job #
Date: 11:16AM, 13 NOV 06

Scope :

Concrete Rectangular & Tee Beam Design

Description 2nd & 3rd Floor

General Information

Code Ref: ACI 318-02, 1997 UBC, 2003 IBC, 2003 NFPA 5000

Span	14.00 ft	f'c	4,000 psi
Depth	8.000 in	Fy	60,000 psi
Width	12.000 in	Concrete Wt.	145.0 pcf
		Seismic Zone	0
		End Fixity	Pinned-Pinned
Beam Weight Added Internally		Live Load acts with Short Term	

Reinforcing

	Rebar @ Center of Beam...			Rebar @ Left End of Beam...				Rebar @ Right End of Beam...			
	Count	Size	'd' from Top		Count	Size	'd' from Top		Count	Size	'd' from Top
#1	1	6	5.25in	#1	1	6	5.25 in	#1	1	6	5.25 in

Load Factoring

Note: Load factoring supports 2003 IBC and 2003 NFPA 5000 by virtue of their references to ACI 318-02 for concrete design. Factoring of entered loads to ultimate loads within this program is according to ACI 318-02 C.2

Uniform Loads

	Dead Load	Live Load	Short Term	Start	End
#1	0.040 k	0.040 k	k	0.000 ft	14.000 ft

Summary

Beam Design OK

Span = 14.00ft, Width= 12.00in Depth = 8.00in

Maximum Moment : Mu	6.35 k-ft	Maximum Deflection	-0.0827 in
Allowable Moment : Mn*phi	9.74 k-ft		
Maximum Shear : Vu	1.71 k	Max Reaction @ Left	1.24 k
Allowable Shear : Vn*phi	17.48 k	Max Reaction @ Right	1.24 k

Shear Stirrups...

Stirrup Area @ Section	0.220 in2						
Region	0.000	2.333	4.667	7.000	9.333	11.667	14.000 ft
Max. Spacing	Not Req'd	Not Req'd	Not Req'd	Not Req'd	Not Req'd	Not Req'd	Not Req'd in
Max Vu	1.714	1.220	0.610	0.595	0.595	1.205	1.509 k

Bending & Shear Force Summary

Bending...	Mn*Phi	Mu, Eq. C-1	Mu, Eq. C-2	Mu, Eq. C-3
@ Center	9.74 k-ft	6.35 k-ft	4.77 k-ft	3.01 k-ft
@ Left End	9.74 k-ft	0.00 k-ft	0.00 k-ft	0.00 k-ft
@ Right End	9.74 k-ft	0.00 k-ft	0.00 k-ft	0.00 k-ft
Shear...	**Vn*Phi**	**Vu, Eq. C-1**	**Vu, Eq. C-2**	**Vu, Eq. C-3**
@ Left End	17.48 k	1.71 k	1.29 k	0.81 k
@ Right End	17.48 k	1.70 k	1.27 k	0.81 k

Deflection

Deflections...	Upward			Downward		
DL + [Bm Wt]	0.0000 in	at	14.0000 ft	-0.0640 in	at	7.0000 ft
DL + LL + [Bm Wt]	0.0000 in	at	14.0000 ft	-0.0827 in	at	7.0000 ft
DL + LL + ST + [Bm Wt]	0.0000 in	at	14.0000 ft	-0.0827 in	at	7.0000 ft

Reactions...	@ Left	@ Right
DL + [Bm Wt]]	0.957 k	0.957 k
DL + LL + [Bm Wt]	1.237 k	1.237 k
DL + LL + ST + [Bm Wt]	1.237 k	1.237 k

P2Dt 69

Title :
Dsgnr:
Description :

Job #
Date: 11:16AM, 13 NOV 06

Scope :

Rev: 580000
User: KW-0602861, Ver 5.8.0, 1-Dec-2003
(c)1983-2003 ENERCALC Engineering Software

Concrete Rectangular & Tee Beam Design

Description 2nd & 3rd Floor

Section Analysis

Evaluate Moment Capacity...	Center	Left End	Right End
X : Neutral Axis	0.760 in	0.760 in	0.760 in
a = beta * Xneutral	0.646 in	0.646 in	0.646 in
Compression in Concrete	26.357 k	26.357 k	26.357 k
Sum [Steel comp. forces]	0.000 k	0.000 k	0.000 k
Tension in Reinforcing	-26.400 k	-26.400 k	-26.400 k
Find Max As for Ductile Failure...			
X-Balanced	3.107 in	3.107 in	3.1071 in
Xmax = Xbal * 0.75	2.330 in	2.330 in	2.330 in
a-max = beta * Xbal	2.641 in	2.641 in	2.641 in
Compression in Concrete	80.817 k	80.817 k	80.817 k
Sum [Steel Comp Forces]	0.000 k	0.000 k	0.000 k
Total Compressive Force	80.817 k	80.817 k	80.817 k
AS Max = Tot Force / Fy	1.347 in2	1.347 in2	1.347 in2
Actual Tension As	0.440 OK	0.000 OK	0.000 OK

Additional Deflection Calcs

Neutral Axis	1.490 in	Mcr	5.06 k-ft
Igross	512.00 in4	Ms:Max DL + LL	4.33 k-ft
Icracked	63.27 in4	R1 = (Ms:DL+LL)/Mcr	1.169
Elastic Modulus	3,605.0 ksi	Ms:Max DL+LL+ST	4.33 k-ft
Fr = 7.5 * f'c^.5	474.342 psi	R2 = (Ms:DL+LL+ST)/Mcr	1.169
Z:Cracking	177.754 k/in	I:eff... Ms(DL+LL)	512.000 in4
Z:cracking > 175 : No Good!		I:eff... Ms(DL+LL+ST)	512.000 in4
Eff. Flange Width	12.00 in		

ACI Factors (per ACI 318-02, applied internally to entered loads)

ACI C-1 & C-2 DL	1.400	ACI C-2 Group Factor	0.750	Add"l "1.4" Factor for Seismic	1.400
ACI C-1 & C-2 LL	1.700	ACI C-3 Dead Load Factor	0.900	Add"l "0.9" Factor for Seismic	0.900
ACI C-1 & C-2 ST	1.700	ACI C-3 Short Term Factor	1.300		
....seismic = ST * :	1.100				

RC-BEAM CONCRETE BEAM DESIGN (VER 1.0)

2ND AND 3RD FLOORS

TIME: 2:19 PM
DATE: 11-13-2006

File Name: UNTITLED

GENERAL CRITERIA:

Beam Concrete Strength	= 5.00 ksi	Design as Bm, Slab, Jst (BSJ)	= S
Column Concrete Strength	= 5.00 ksi	Include Beam Weight (Y/N)	= Y
Steel Yield Strength	= 60.0 ksi	Concrete Weight	= 145 pcf
Ultimate Dead Load Factor	= 1.40	Shear Reinf.: Bar Size	=#3
Ultimate Live Load Factor	= 1.70	No. of Legs	= 2
Pattern Live Loads (Y/N)	= N	Conc. Cover to Reinf.: Top	= 2.00 in.
% of Live Load to Pattern	= 100	Bot	= 2.00 in.
Left Span Cantilever (Y/N)	= N	Deflection: Compression stl.	= 0.00 in2
Right Span Cantilever (Y/N)	= Y		
Left Span Fixed (Y/N)	= N		
Right Span Fixed (Y/N)	= N		

SPAN GEOMETRY:

SLABS

Span	Length (ft)	Depth (in) (overall)	Stem Width (in) Base	Root	Flange (in) Width	Thickness
1	7.00	8.00	12.00	12.00	12.00	0.00
2	6.50 /5.5	8.00	12.00	12.00	12.00	0.00

COLUMNS/SUPPORTS

Joint No.	Lower Col. Width (in)	Lower Col. Depth (in)	Lower Col. Height (ft)	Upper Col. Width (in)	Upper Col. Depth (in)	Upper Col. Height (ft)
1	PINNED SUPPORT					
2	PINNED SUPPORT					
3	CANTILEVER					

P22 of 69

SPAN LOADS:

<----------UNIFORM LOADS (k/ft)---------->

Span	Dead Load	Live Load	Beam Wt.
1	0.04	0.04	0.10
2	0.04	0.10	0.10

<----------CONCENTRATED LOADS (kips)---------->

Span	Dead Load	Live Load	Dist.(ft)

<----------PARTIAL LOADS (k/ft)---------->

	Dead		Live		Distance (ft)	
Span	Start	End	Start	End	Start	End

Distance is measured from the left support.

RC-BEAM CONCRETE BEAM DESIGN (VER 1.0)

2ND AND 3RD FLOORS

BEAM END FORCES:

SPAN	MAX. Vu @ d (k)	STIR. (in.oc)	MAX. Mu+ (ft-k)	AREA STL. (in^2)	MAX. Mu- (ft-k)	AREA STL. (in^2)	DEFL. (inches)
1	1.87	none	0.02	0.00	-7.63	0.29	-0.013
2	2.17	none	0.00	0.00	-7.63	0.29	0.144

COLUMN JOINT FORCES:

JOINT	MOMENTS: COLUMN ABOVE (ft-kip)	MOMENTS: COLUMN BELOW (ft-kip)	REACTIONS: SERVICE DL (kips)	REACTIONS: SERVICE LL (kips)
1	PINNED SUPPORT		0.07	-0.16
2	PINNED SUPPORT		1.78	1.09
3	CANTILEVER		0.00	0.00

NOTES: Shear force is determined at "d" from face of support.
Moments are positive if they cause compression in the top.
Deflections are positive DOWN.

Deflections are calculated using unfactored sustained loads.
Sustained load = 100% dead load plus 50% live load.

RC-BEAM CONCRETE BEAM DESIGN (VER 1.0)

2ND AND 3RD FLOOR

TIME: 2:23 PM
DATE: 11-13-2006

File Name: UNTITLED

GENERAL CRITERIA:

Beam Concrete Strength	= 5.00 ksi	Design as Bm, Slab, Jst (BSJ)	= S
Column Concrete Strength	= 5.00 ksi	Include Beam Weight (Y/N)	= Y
Steel Yield Strength	= 60.0 ksi	Concrete Weight	= 145 pcf
Ultimate Dead Load Factor	= 1.40	Shear Reinf.: Bar Size	=#3
Ultimate Live Load Factor	= 1.70	No. of Legs	= 2
Pattern Live Loads (Y/N)	= N		
% of Live Load to Pattern	= 100	Conc. Cover to Reinf.: Top	= 2.00 in.
		Bot	= 2.00 in.
Left Span Cantilever (Y/N)	= N		
Right Span Cantilever (Y/N)	= Y	Deflection: Compression stl.	= 0.00 in2
Left Span Fixed (Y/N)	= N		
Right Span Fixed (Y/N)	= N		

SPAN GEOMETRY:

SLABS

Span	Length (ft)	Depth (in) (overall)	Stem Width (in) Base	Root	Flange (in) Width	Thickness
1	7.00	8.00	12.00	12.00	12.00	0.00
2	4.00	6.00	12.00	12.00	12.00	0.00

COLUMNS/SUPPORTS

Joint No.	Lower Col. Width (in)	Depth (in)	Height (ft)	Upper Col. Width (in)	Depth (in)	Height (ft)
1	PINNED SUPPORT					
2	PINNED SUPPORT					
3	CANTILEVER					

RC-BEAM CONCRETE BEAM DESIGN (VER 1.0)

2ND AND 3RD FLOOR

SPAN LOADS:

<-----------UNIFORM LOADS (k/ft)----------->

Span	Dead Load	Live Load	Beam Wt.
1	0.04	0.04	0.10
2	0.04	0.10	0.07

<---------CONCENTRATED LOADS (kips)---------->

Span	Dead Load	Live Load	Dist.(ft)

<----------------PARTIAL LOADS (k/ft)---------->

	Dead		Live		Distance (ft)	
Span	Start	End	Start	End	Start	End

Distance is measured from the left support.

P26 of 69

RC-BEAM CONCRETE BEAM DESIGN (VER 1.0)

2ND AND 3RD FLOOR

TIME: 2:23 PM
DATE: 11-13-2006

File Name: UNTITLED

BEAM END FORCES:

SPAN	MAX. Vu @ d (k)	STIR. (in.oc)	MAX. Mu+ (ft-k)	AREA STL. (in^2)	MAX. Mu- (ft-k)	AREA STL. (in^2)	DEFL. (inches)
1	1.15	none	0.63	0.02	-2.62	0.10	-0.000
2	1.20	none	0.00	0.00	-2.62	0.15	0.026

COLUMN JOINT FORCES:

JOINT	MOMENTS		REACTIONS	
	COLUMN ABOVE (ft-kip)	COLUMN BELOW (ft-kip)	SERVICE DL (kips)	SERVICE LL (kips)
1	PINNED SUPPORT		0.35	0.03
2	PINNED SUPPORT		1.06	0.65
3	CANTILEVER		0.00	0.00

NOTES: Shear force is determined at "d" from face of support.
Moments are positive if they cause compression in the top.
Deflections are positive DOWN.

Deflections are calculated using unfactored sustained loads.
Sustained load = 100% dead load plus 50% live load.

4/.

P27 of 69

Title :
Dsgnr:
Description :

Scope :

Job #
Date: 11:02AM, 13 NOV 06

Multi-Span Concrete Beam

Description 1st Floor

General Information

Code Ref: ACI 318-02, 1997 UBC, 2003 IBC, 2003 NFPA 5000

Fy	60,000.0 psi	Spans Considered Continuous Over Supports		ACI Dead Load Factor	1.40
f'c	4,000.0 psi	Stirrup Fy	40,000.0 psi	ACI Live Load Factor	1.70

Concrete Member Information

Description			span1	span2
Span		ft	20.00	14.00
Beam Width		in	12.00	12.00
Beam Depth		in	8.00	8.00
End Fixity			Pin-Pin	Pin-Pin
Reinforcing	Center	Area	0.60in2	0.30in2
		Bar Depth	4.25in	4.25in
	Left	Area		0.60in2
		Bar Depth		2.00in
	Right	Area	0.60in2	
		Bar Depth	2.00in	

Loads

Using Live Load This Span ??		Yes	Yes
Dead Load	k/ft	0.140	0.140
Live Load	k/ft	0.040	0.040

Results

		Beam OK	Beam OK
Mmax @ Cntr	k-ft	8.50	2.30
@ X =	ft	8.00	9.80
Mn * Phi	k-ft	10.26	5.40
Max @ Left End	k-ft	0.00	-10.43
Mn * Phi	k-ft	0.00	14.98
Max @ Right End	k-ft	-10.43	0.00
Mn * Phi	k-ft	14.98	0.00
		Bending OK	Bending OK
Shear @ Left	k	2.12	2.59
Shear @ Right	k	3.16	1.10

Reactions & Deflections

DL @ Left	k	1.12	3.05
LL @ Left	k	0.32	0.87
Total @ Left	k	1.44	3.92
DL @ Right	k	3.05	0.58
LL @ Right	k	0.87	0.17
Total @ Right	k	3.92	0.75
Max. Deflection	in	-0.444	0.032
@ X =	ft	8.93	2.43
Inertia : Effective	in4	216.49	203.23

Shear Stirrups

Stirrup Rebar Area	in2	0.200	0.200
Spacing @ Left	in	Not Req'd	Not Req'd
Spacing @ .2*L	in	Not Req'd	Not Req'd
Spacing @ .4*L	in	Not Req'd	Not Req'd
Spacing @ .6*L	in	Not Req'd	Not Req'd
Spacing @ .8*L	in	Not Req'd	Not Req'd
Spacing @ Right	in	Not Req'd	Not Req'd

P28-69

Title :
Dsgnr:
Description :

Job #
Date: 11:02AM, 13 NOV 06

Scope :

Description 1st Floor

Query Values

Location	ft	0.00	0.00
Moment	k-ft	0.0	-10.4
Shear	k	2.1	2.6
Deflection	in	0.0000	0.0000

Title :
Dsgnr:
Description :

Job #
Date: 11:08AM, 13 NOV 06

Scope :

Rev: 580000
User: KW-0602861, Ver 5.8.0, 1-Dec-2003
(c)1983-2003 ENERCALC Engineering Software

Multi-Span Concrete Beam

Description 1st Floor

General Information

Code Ref: ACI 318-02, 1997 UBC, 2003 IBC, 2003 NFPA 5000

Fy	60,000.0 psi	Spans Considered Continuous Over Supports		ACI Dead Load Factor	1.40
f'c	4,000.0 psi	Stirrup Fy	40,000.0 psi	ACI Live Load Factor	1.70

Concrete Member Information

Description			span1	span2	span3
Span		ft	13.00	8.00	8.00
Beam Width		in	12.00	12.00	12.00
Beam Depth		in	8.00	8.00	8.00
End Fixity			Pin-Pin	Pin-Pin	Pin-Pin
Reinforcing	Center	Area	0.40in2	0.20in2	0.20in2
		Bar Depth	4.75in	4.75in	4.75in
	Left	Area		0.40in2	0.20in2
		Bar Depth		2.00in	2.00in
	Right	Area	0.40in2	0.20in2	
		Bar Depth	2.00in	2.00in	

Loads

Using Live Load This Span ??		Yes	Yes	Yes
Dead Load	k/ft	0.185	0.185	0.185
Live Load	k/ft	0.100	0.100	0.100

Results

		Beam OK	Beam OK	Beam OK
Mmax @ Cntr	k-ft	6.07	0.00	2.60
@ X =	ft	5.29	0.00	4.53
Mn * Phi	k-ft	8.00	4.13	4.13
Max @ Left End	k-ft	0.00	-6.58	-1.79
Mn * Phi	k-ft	0.00	10.25	5.26
Max @ Right End	k-ft	-6.58	-1.79	0.00
Mn * Phi	k-ft	10.25	5.26	0.00
		Bending OK	Bending OK	Bending OK
Shear @ Left	k	2.28	2.31	1.94
Shear @ Right	k	3.29	1.12	1.49

Reactions & Deflections

DL @ Left	k	0.98	2.42	1.32
LL @ Left	k	0.53	1.31	0.71
Total @ Left	k	1.52	3.73	2.03
DL @ Right	k	2.42	1.32	0.64
LL @ Right	k	1.31	0.71	0.35
Total @ Right	k	3.73	2.03	0.99
Max. Deflection	in	-0.057	0.007	-0.010
@ X =	ft	5.89	2.72	4.21
Inertia : Effective	in4	512.00	512.00	512.00

Shear Stirrups

Stirrup Rebar Area	in2	0.200	0.200	0.400
Spacing @ Left	in	Not Req'd	Not Req'd	Not Req'd
Spacing @ .2*L	in	Not Req'd	Not Req'd	Not Req'd
Spacing @ .4*L	in	Not Req'd	Not Req'd	Not Req'd
Spacing @ .6*L	in	Not Req'd	Not Req'd	Not Req'd
Spacing @ .8*L	in	Not Req'd	Not Req'd	Not Req'd
Spacing @ Right	in	Not Req'd	Not Req'd	Not Req'd

P30-069

Title :
Dsgnr:
Description :

Job #
Date: 11:08AM, 13 NOV 06

Scope :

Description 1st Floor

Query Values

Location	ft	0.00	0.00	0.00
Moment	k-ft	0.0	-6.6	-1.8
Shear	k	2.3	2.3	1.9
Deflection	in	0.0000	0.0000	0.0000

Title :
Dsgnr:
Description :

Job #
Date: 11:18AM, 13 NOV 06

Scope :

Rev: 580000
User: KW-0602861, Ver 5.8.0, 1-Dec-2003
(c)1983-2003 ENERCALC Engineering Software

Concrete Rectangular & Tee Beam Design

Description 1st Floor

General Information

Code Ref: ACI 318-02, 1997 UBC, 2003 IBC, 2003 NFPA 5000

Span	14.00 ft	f'c	4,000 psi
Depth	8.000 in	Fy	60,000 psi
Width	12.000 in	Concrete Wt.	145.0 pcf
		Seismic Zone	0
		End Fixity	Pinned-Pinned
Beam Weight Added Internally		Live Load acts with Short Term	

Reinforcing

	Rebar @ Center of Beam...			Rebar @ Left End of Beam...			Rebar @ Right End of Beam...			
	Count	Size	'd' from Top	Count	Size	'd' from Top	Count	Size	'd' from Top	
#1	1	6	4.50 in	1	6	4.50 in	1	6	4.50 in	

Load Factoring

Note: Load factoring supports 2003 IBC and 2003 NFPA 5000 by virtue of their references to ACI 318-02 for concrete design. Factoring of entered loads to ultimate loads within this program is according to ACI 318-02 C.2

Uniform Loads

	Dead Load	Live Load	Short Term	Start	End
#1	0.040 k	0.040 k	k	0.000 ft	14.000 ft

Summary

Beam Design OK

Span = 14.00ft, Width= 12.00in Depth = 8.00in

Maximum Moment : Mu	6.35 k-ft	Maximum Deflection	-0.0827 in
Allowable Moment : Mn*phi	8.26 k-ft		
Maximum Shear : Vu	1.73 k	Max Reaction @ Left	1.24 k
Allowable Shear : Vn*phi	14.99 k	Max Reaction @ Right	1.24 k

Shear Stirrups...
Stirrup Area @ Section 0.220 in2

Region	0.000	2.333	4.667	7.000	9.333	11.667	14.000 ft
Max. Spacing	Not Req'd	Not Req'd	Not Req'd	Not Req'd	Not Req'd	Not Req'd	Not Req'd in
Max Vu	1.728	1.220	0.610	0.595	0.595	1.205	1.714 k

Bending & Shear Force Summary

Bending...	Mn*Phi	Mu, Eq. C-1	Mu, Eq. C-2	Mu, Eq. C-3
@ Center	8.26 k-ft	6.35 k-ft	4.77 k-ft	3.01 k-ft
@ Left End	8.26 k-ft	0.00 k-ft	0.00 k-ft	0.00 k-ft
@ Right End	8.26 k-ft	0.00 k-ft	0.00 k-ft	0.00 k-ft
Shear...	**Vn*Phi**	**Vu, Eq. C-1**	**Vu, Eq. C-2**	**Vu, Eq. C-3**
@ Left End	14.99 k	1.73 k	1.30 k	0.82 k
@ Right End	14.99 k	1.71 k	1.29 k	0.81 k

Deflection

Deflections...	Upward			Downward		
DL + [Bm Wt]	0.0000 in	at	14.0000 ft	-0.0640 in	at	7.0000 ft
DL + LL + [Bm Wt]	0.0000 in	at	14.0000 ft	-0.0827 in	at	7.0000 ft
DL + LL + ST + [Bm Wt]	0.0000 in	at	14.0000 ft	-0.0827 in	at	7.0000 ft

Reactions...	@ Left	@ Right
DL + [Bm Wt]]	0.957 k	0.957 k
DL + LL + [Bm Wt]	1.237 k	1.237 k
DL + LL + ST + [Bm Wt]	1.237 k	1.237 k

P32-269

Title :
Dsgnr:
Description :

Job #
Date: 11:18AM, 13 NOV 06

Scope :

Description 1st Floor

Section Analysis

Evaluate Moment Capacity...	Center	Left End	Right End
X : Neutral Axis	0.760 in	0.760 in	0.760 in
a = beta * Xneutral	0.646 in	0.646 in	0.646 in
Compression in Concrete	26.357 k	26.357 k	26.357 k
Sum [Steel comp. forces]	0.000 k	0.000 k	0.000 k
Tension in Reinforcing	-26.400 k	-26.400 k	-26.400 k
Find Max As for Ductile Failure...			
X-Balanced	2.663 in	2.663 in	2.6633 in
Xmax = Xbal * 0.75	1.997 in	1.997 in	1.997 in
a-max = beta * Xbal	2.264 in	2.264 in	2.264 in
Compression in Concrete	69.272 k	69.272 k	69.272 k
Sum [Steel Comp Forces]	0.000 k	0.000 k	0.000 k
Total Compressive Force	69.272 k	69.272 k	69.272 k
AS Max = Tot Force / Fy	1.155 in2	1.155 in2	1.155 in2
Actual Tension As	0.440 OK	0.000 OK	0.000 OK

Additional Deflection Calcs

Neutral Axis	1.365 in	Mcr	5.06 k-ft
Igross	512.00 in4	Ms:Max DL + LL	4.33 k-ft
Icracked	44.96 in4	R1 = (Ms:DL+LL)/Mcr	1.169
Elastic Modulus	3,605.0 ksi	Ms:Max DL+LL+ST	4.33 k-ft
Fr = 7.5 * f'c^.5	474.342 psi	R2 = (Ms:DL+LL+ST)/Mcr	1.169
Z:Cracking	250.377 k/in	I:eff... Ms(DL+LL)	512.000 in4
Z:cracking > 175 : No Good!		I:eff... Ms(DL+LL+ST)	512.000 in4
Eff. Flange Width	12.00 in		

ACI Factors (per ACI 318-02, applied internally to entered loads)

ACI C-1 & C-2 DL	1.400	ACI C-2 Group Factor	0.750	Add"l "1.4" Factor for Seismic	1.400
ACI C-1 & C-2 LL	1.700	ACI C-3 Dead Load Factor	0.900	Add"l "0.9" Factor for Seismic	0.900
ACI C-1 & C-2 ST	1.700	ACI C-3 Short Term Factor	1.300		
....seismic = ST * :	1.100				

P33-T69

4) a) ROOF TERRACE BEAMS

* RB-1 (8" x 24"):

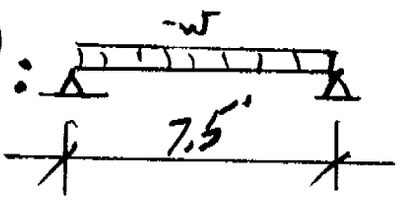

W { DL = (6.90) / LL = (2.20) } P.9

* RB-2 (8" x 42"±):

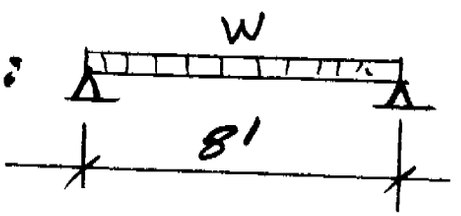

W { DL = 1.60 / LL = .42 } P.9

b). 2ND. & 3RD. FLOORS BEAMS

* B-1 (8" x 24"):

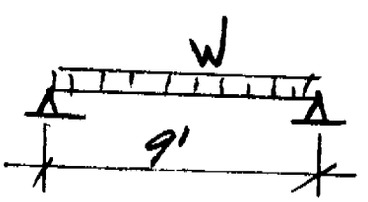

W { DL = 3.10 / LL = .90 } P.17

B3:

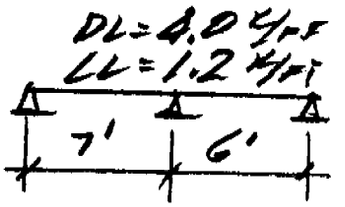

* B-2 (8" x 34"±):

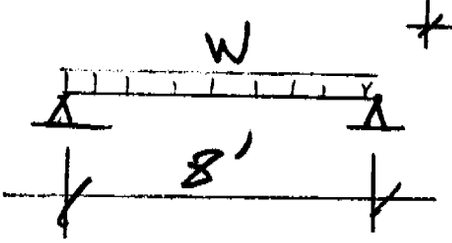

W { DL = 1.00 / LL = .30 } P.19

* ALL OTHER BEAMS - MIN. REINFORCEMENT

* SLB-1 (36" x 8"):

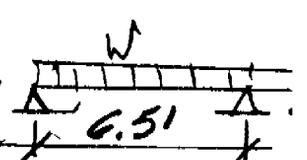

W { DL = (.14 x 10) = 1.4 + BM / LL = (1.04 x 10) = .40 }

P34 of 69

a/

Title :
Dsgnr:
Description :

Job #
Date: 12:42PM, 13 NOV 06

Scope :

Concrete Rectangular & Tee Beam Design

Description Roof Terrace-RB-1

General Information

Code Ref: ACI 318-02, 1997 UBC, 2003 IBC, 2003 NFPA 5000

Span	7.50 ft	f'c	5,000 psi
Depth	24.000 in	Fy	60,000 psi
Width	8.000 in	Concrete Wt.	145.0 pcf
		Seismic Zone	0
		End Fixity	Pinned-Pinned
Beam Weight Added Internally		Live Load acts with Short Term	

Reinforcing

Rebar @ Center of Beam...				Rebar @ Left End of Beam...				Rebar @ Right End of Beam...			
	Count	Size	'd' from Top		Count	Size	'd' from Top		Count	Size	'd' from Top
#1	2	6	3.00 in	#1	2	6	3.00 in	#1	2	6	3.00 in
#2	2	6	21.00 in	#2	2	6	21.00 in	#2	2	6	21.00 in
#3	2	6	12.00 in	#3	2	6	12.00 in	#3	2	6	12.00 in

Load Factoring

Note: Load factoring supports 2003 IBC and 2003 NFPA 5000 by virtue of their references to ACI 318-02 for concrete design. Factoring of entered loads to ultimate loads within this program is according to ACI 318-02 C.2

Uniform Loads

	Dead Load	Live Load	Short Term	Start	End
#1	6.900 k	2.200 k	k	0.000 ft	7.500 ft

Summary

Beam Design OK

Span = 7.50ft, Width= 8.00in Depth = 24.00in

Maximum Moment : Mu	96.12 k-ft	Maximum Deflection	-0.0506 in
Allowable Moment : Mn*phi	117.71 k-ft		
Maximum Shear : Vu	27.48 k	Max Reaction @ Left	34.85 k
Allowable Shear : Vn*phi	42.63 k	Max Reaction @ Right	34.85 k

Shear Stirrups...

Stirrup Area @ Section 0.220 in2

Region	0.000	1.250	2.500	3.750	5.000	6.250	7.500 ft
Max. Spacing	10.500	10.500	10.500	10.500	10.500	10.500	10.500 in
Max Vu	27.478	27.478	17.225	16.815	16.815	27.068	27.068 k

Bending & Shear Force Summary

Bending...	Mn*Phi	Mu, Eq. C-1	Mu, Eq. C-2	Mu, Eq. C-3
@ Center	117.71 k-ft	96.12 k-ft	72.09 k-ft	44.89 k-ft
@ Left End	117.71 k-ft	0.00 k-ft	0.00 k-ft	0.00 k-ft
@ Right End	117.71 k-ft	0.00 k-ft	0.00 k-ft	0.00 k-ft
Shear...	**Vn*Phi**	**Vu, Eq. C-1**	**Vu, Eq. C-2**	**Vu, Eq. C-3**
@ Left End	42.63 k	27.48 k	20.61 k	12.83 k
@ Right End	42.63 k	27.07 k	20.30 k	12.64 k

Deflection

Deflections...	Upward			Downward		
DL + [Bm Wt]	0.0000 in	at	7.5000 ft	-0.0281 in	at	3.7500 ft
DL + LL + [Bm Wt]	0.0000 in	at	7.5000 ft	-0.0506 in	at	3.7500 ft
DL + LL + ST + [Bm Wt]	0.0000 in	at	7.5000 ft	-0.0506 in	at	3.7500 ft

Reactions...	@ Left	@ Right
DL + [Bm Wt]]	26.600 k	26.600 k
DL + LL + [Bm Wt]	34.850 k	34.850 k
DL + LL + ST + [Bm Wt]	34.850 k	34.850 k

P35-r69

Title :
Dsgnr:
Description :

Job #
Date: 12:42PM, 13 NOV 06

Scope :

Concrete Rectangular & Tee Beam Design

Description Roof Terrace-RB-1

Section Analysis

Evaluate Moment Capacity...	Center	Left End	Right End
X : Neutral Axis	3.570 in	3.570 in	3.570 in
a = beta * Xneutral	2.856 in	2.856 in	2.856 in
Compression in Concrete	97.104 k	97.104 k	97.104 k
Sum [Steel comp. forces]	8.484 k	8.484 k	8.484 k
Tension in Reinforcing	-105.600 k	-105.600 k	-105.600 k
Find Max As for Ductile Failure...			
X-Balanced	12.429 in	12.429 in	12.4286 in
Xmax = Xbal * 0.75	9.321 in	9.321 in	9.321 in
a-max = beta * Xbal	9.943 in	9.943 in	9.943 in
Compression in Concrete	253.543 k	253.543 k	253.543 k
Sum [Steel Comp Forces]	48.180 k	48.180 k	48.180 k
Total Compressive Force	301.723 k	301.723 k	301.723 k
AS Max = Tot Force / Fy	5.029 in2	5.029 in2	5.029 in2
Actual Tension As	1.760 OK	0.000 OK	0.000 OK

Additional Deflection Calcs

Neutral Axis	5.540 in	Mcr	33.94 k-ft
Igross	9,216.00 in4	Ms:Max DL + LL	65.34 k-ft
Icracked	2,271.85 in4	R1 = (Ms:DL+LL)/Mcr	0.519
Elastic Modulus	4,030.5 ksi	Ms:Max DL+LL+ST	65.34 k-ft
Fr = 7.5 * f'c^.5	530.330 psi	R2 = (Ms:DL+LL+ST)/Mcr	0.519
Z:Cracking	239.775 k/in	I:eff... Ms(DL+LL)	3,245.015 in4
Z:cracking > 175 : No Good!		I:eff... Ms(DL+LL+ST)	3,245.015 in4
Eff. Flange Width	8.00 in		

ACI Factors (per ACI 318-02, applied internally to entered loads)

ACI C-1 & C-2 DL	1.400	ACI C-2 Group Factor	0.750	Add"l "1.4" Factor for Seismic	1.400
ACI C-1 & C-2 LL	1.700	ACI C-3 Dead Load Factor	0.900	Add"l "0.9" Factor for Seismic	0.900
ACI C-1 & C-2 ST	1.700	ACI C-3 Short Term Factor	1.300		
....seismic = ST * :	1.100				

P36 of 69

Title :
Dsgnr:
Description :

Job #
Date: 12:44PM, 13 NOV 06

Scope :

Concrete Rectangular & Tee Beam Design

Description Roof Terrace-RB-2

General Information

Code Ref: ACI 318-02, 1997 UBC, 2003 IBC, 2003 NFPA 5000

Span	8.00 ft	f'c	5,000 psi
Depth	42.000 in	Fy	60,000 psi
Width	8.000 in	Concrete Wt.	145.0 pcf
		Seismic Zone	0
		End Fixity	Pinned-Pinned
Beam Weight Added Internally		Live Load acts with Short Term	

Reinforcing

	Rebar @ Center of Beam...			Rebar @ Left End of Beam...			Rebar @ Right End of Beam...			
	Count	Size	'd' from Top	Count	Size	'd' from Top	Count	Size	'd' from Top	
#1	2	6	3.00 in	#1	2	6	3.00 in	#1	2	6	3.00 in
#2	2	6	39.00 in	#2	2	6	39.00 in	#2	2	6	39.00 in
#3	2	6	21.00 in	#3	2	6	21.00 in	#3	2	6	21.00 in

Load Factoring

Note: Load factoring supports 2003 IBC and 2003 NFPA 5000 by virtue of their references to ACI 318-02 for concrete design. Factoring of entered loads to ultimate loads within this program is according to ACI 318-02 C.2

Uniform Loads

	Dead Load	Live Load	Short Term	Start	End
#1	1.600 k	0.420 k	k	0.000 ft	8.000 ft

Summary

Beam Design OK

Span = 8.00ft, Width= 8.00in Depth = 42.00in

Maximum Moment : Mu	27.42 k-ft	Maximum Deflection	-0.0011 in
Allowable Moment : Mn*phi	224.62 k-ft		
Maximum Shear : Vu	2.63 k	Max Reaction @ Left	9.43 k
Allowable Shear : Vn*phi	64.58 k	Max Reaction @ Right	9.43 k

Shear Stirrups...

Stirrup Area @ Section 0.220 in2

Region	0.000	1.333	2.667	4.000	5.333	6.667	3.000 ft
Max. Spacing	Not Req'd	Not Req'd	Not Req'd	Not Req'd	Not Req'd	Not Req'd	Not Req'd in
Max Vu	2.632	2.632	2.632	2.523	2.523	2.523	2.523 k

Bending & Shear Force Summary

Bending...	Mn*Phi	Mu, Eq. C-1	Mu, Eq. C-2	Mu, Eq. C-3
@ Center	224.62 k-ft	27.42 k-ft	20.57 k-ft	13.96 k-ft
@ Left End	224.62 k-ft	0.00 k-ft	0.00 k-ft	0.00 k-ft
@ Right End	224.62 k-ft	0.00 k-ft	0.00 k-ft	0.00 k-ft
Shear...	**Vn*Phi**	**Vu, Eq. C-1**	**Vu, Eq. C-2**	**Vu, Eq. C-3**
@ Left End	64.58 k	2.63 k	1.97 k	1.34 k
@ Right End	64.58 k	2.52 k	1.89 k	1.28 k

Deflection

Deflections...	Upward			Downward		
DL + [Bm Wt]	0.0000 in	at	0.0000 ft	-0.0009 in	at	4.0000 ft
DL + LL + [Bm Wt]	0.0000 in	at	0.0000 ft	-0.0011 in	at	4.0000 ft
DL + LL + ST + [Bm Wt]	0.0000 in	at	0.0000 ft	-0.0011 in	at	4.0000 ft

Reactions...	@ Left	@ Right
DL + [Bm Wt]]	7.753 k	7.753 k
DL + LL + [Bm Wt]	9.433 k	9.433 k
DL + LL + ST + [Bm Wt]	9.433 k	9.433 k

P3To-69

Title :
Dsgnr:
Description :

Scope :

Job #
Date: 12:44PM, 13 NOV 06

Concrete Rectangular & Tee Beam Design

Description Roof Terrace-RB-2

Section Analysis

Evaluate Moment Capacity...	Center	Left End	Right End
X : Neutral Axis	3.570 in	3.570 in	3.570 in
a = beta * Xneutral	2.856 in	2.856 in	2.856 in
Compression in Concrete	97.104 k	97.104 k	97.104 k
Sum [Steel comp. forces]	8.484 k	8.484 k	8.484 k
Tension in Reinforcing	-105.600 k	-105.600 k	-105.600 k
Find Max As for Ductile Failure...			
X-Balanced	23.082 in	23.082 in	23.0816 in
Xmax = Xbal * 0.75	17.311 in	17.311 in	17.311 in
a-max = beta * Xbal	18.465 in	18.465 in	18.465 in
Compression in Concrete	470.865 k	470.865 k	470.865 k
Sum [Steel Comp Forces]	49.060 k	49.060 k	49.060 k
Total Compressive Force	519.925 k	519.925 k	519.925 k
AS Max = Tot Force / Fy	8.665 in2	8.665 in2	8.665 in2
Actual Tension As	1.760 OK	0.000 OK	0.000 OK

Additional Deflection Calcs

Neutral Axis	7.895 in	Mcr	103.94 k-ft
Igross	49,392.00 in4	Ms:Max DL + LL	18.87 k-ft
Icracked	8,677.46 in4	R1 = (Ms:DL+LL)/Mcr	5.509
Elastic Modulus	4,030.5 ksi	Ms:Max DL+LL+ST	18.87 k-ft
Fr = 7.5 * f'c^.5	530.330 psi	R2 = (Ms:DL+LL+ST)/Mcr	5.509
Z:Cracking	34.409 k/in	I:eff... Ms(DL+LL)	49,392.000 in4
		I:eff... Ms(DL+LL+ST)	49,392.000 in4
Eff. Flange Width	8.00 in		

ACI Factors (per ACI 318-02, applied internally to entered loads)

ACI C-1 & C-2 DL	1.400	ACI C-2 Group Factor	0.750	Add'l "1.4" Factor for Seismic	1.400
ACI C-1 & C-2 LL	1.700	ACI C-3 Dead Load Factor	0.900	Add'l "0.9" Factor for Seismic	0.900
ACI C-1 & C-2 ST	1.700	ACI C-3 Short Term Factor	1.300		
....seismic = ST * :	1.100				

P38 of 69

61.

Title :
Dsgnr:
Description :

Scope :

Job #
Date: 12:48PM, 13 NOV 06

Concrete Rectangular & Tee Beam Design

Description 2nd and 3rd Floor-B-1

General Information

Code Ref: ACI 318-02, 1997 UBC, 2003 IBC, 2003 NFPA 5000

Span	9.00 ft	f'c	5,000 psi
Depth	24.000 in	Fy	60,000 psi
Width	8.000 in	Concrete Wt.	145.0 pcf
		Seismic Zone	0
		End Fixity	Pinned-Pinned
Beam Weight Added Internally		Live Load acts with Short Term	

Reinforcing

	Rebar @ Center of Beam...			Rebar @ Left End of Beam...			Rebar @ Right End of Beam...			
	Count	Size	'd' from Top		Count	Size	'd' from Top		Count	Size	'd' from Top
#1	2	6	3.00 in	#1	2	6	3.00 in	#1	2	6	3.00 in
#2	2	6	12.00 in	#2	2	6	12.00 in	#2	2	6	12.00 in
#3	2	6	21.00in	#3	2	6	21.00 in	#3	2	6	21.00 in

Load Factoring

Note: Load factoring supports 2003 IBC and 2003 NFPA 5000 by virtue of their references to ACI 318-02 for concrete design. Factoring of entered loads to ultimate loads within this program is according to ACI 318-02 C.2

Uniform Loads

	Dead Load	Live Load	Short Term	Start	End
#1	3.100 k	0.900 k	k	0.000 ft	9.000 ft

Summary

Beam Design OK

Span = 9.00ft, Width= 8.00in Depth = 24.00in

Maximum Moment : Mu	62.17 k-ft	Maximum Deflection	-0.0264 in
Allowable Moment : Mn*phi	117.71 k-ft		
Maximum Shear : Vu	17.02 k	Max Reaction @ Left	18.87 k
Allowable Shear : Vn*phi	42.63 k	Max Reaction @ Right	18.87 k

Shear Stirrups...

Stirrup Area @ Section 0.220 in2

Region	0.000	1.500	3.000	4.500	6.000	7.500	9.000 ft
Max. Spacing	10.500	10.500	Not Req'd	Not Req'd	Not Req'd	10.500	10.500 in
Max Vu	17.022	17.022	9.285	9.064	9.064	16.801	16.801 k

Bending & Shear Force Summary

Bending...	Mn*Phi	Mu, Eq. C-1	Mu, Eq. C-2	Mu, Eq. C-3
@ Center	117.71 k-ft	62.17 k-ft	46.63 k-ft	30.01 k-ft
@ Left End	117.71 k-ft	0.00 k-ft	0.00 k-ft	0.00 k-ft
@ Right End	117.71 k-ft	0.00 k-ft	0.00 k-ft	0.00 k-ft
Shear...	**Vn*Phi**	**Vu, Eq. C-1**	**Vu, Eq. C-2**	**Vu, Eq. C-3**
@ Left End	42.63 k	17.02 k	12.77 k	8.22 k
@ Right End	42.63 k	16.80 k	12.60 k	8.11 k

Deflection

Deflections...	Upward			Downward		
DL + [Bm Wt]	0.0000 in	at	0.0000 ft	-0.0131 in	at	4.5000 ft
DL + LL + [Bm Wt]	0.0000 in	at	0.0000 ft	-0.0264 in	at	4.5000 ft
DL + LL + ST + [Bm Wt]	0.0000 in	at	0.0000 ft	-0.0264 in	at	4.5000 ft

Reactions...	@ Left	@ Right
DL + [Bm Wt]]	14.820 k	14.820 k
DL + LL + [Bm Wt]	18.870 k	18.870 k
DL + LL + ST + [Bm Wt]	18.870 k	18.870 k

P39 of 69

Title :
Dsgnr:
Description :

Job #
Date: 12:48PM, 13 NOV 06

Scope :

Description 2nd and 3rd Floor-B-1

Section Analysis

Evaluate Moment Capacity...	Center	Left End	Right End
X : Neutral Axis	3.570 in	3.570 in	3.570 in
a = beta * Xneutral	2.856 in	2.856 in	2.856 in
Compression in Concrete	97.104 k	97.104 k	97.104 k
Sum [Steel comp. forces]	8.484 k	8.484 k	8.484 k
Tension in Reinforcing	-105.600 k	-105.600 k	-105.600 k
Find Max As for Ductile Failure...			
X-Balanced	12.429 in	12.429 in	12.4286 in
Xmax = Xbal * 0.75	9.321 in	9.321 in	9.321 in
a-max = beta * Xbal	9.943 in	9.943 in	9.943 in
Compression in Concrete	253.543 k	253.543 k	253.543 k
Sum [Steel Comp Forces]	48.180 k	48.180 k	48.180 k
Total Compressive Force	301.723 k	301.723 k	301.723 k
AS Max = Tot Force / Fy	5.029 in2	5.029 in2	5.029 in2
Actual Tension As	1.760 OK	0.000 OK	0.000 OK

Additional Deflection Calcs

Neutral Axis	5.540 in	Mcr	33.94 k-ft
Igross	9,216.00 in4	Ms:Max DL + LL	42.46 k-ft
Icracked	2,271.85 in4	R1 = (Ms:DL+LL)/Mcr	0.799
Elastic Modulus	4,030.5 ksi	Ms:Max DL+LL+ST	42.46 k-ft
Fr = 7.5 * f'c^.5	530.330 psi	R2 = (Ms:DL+LL+ST)/Mcr	0.799
Z:Cracking	155.795 k/in	I:eff... Ms(DL+LL)	5,819.454 in4
Z:cracking > 145 : Interior Only !		I:eff... Ms(DL+LL+ST)	5,819.454 in4
Eff. Flange Width	8.00 in		

ACI Factors (per ACI 318-02, applied internally to entered loads)

ACI C-1 & C-2 DL	1.400	ACI C-2 Group Factor	0.750	Add"l "1.4" Factor for Seismic	1.400
ACI C-1 & C-2 LL	1.700	ACI C-3 Dead Load Factor	0.900	Add"l "0.9" Factor for Seismic	0.900
ACI C-1 & C-2 ST	1.700	ACI C-3 Short Term Factor	1.300		
....seismic = ST * :	1.100				

PAGE 69

Title :
Dsgnr:
Description :

Job #
Date: 12:47PM, 13 NOV 06

Scope :

Concrete Rectangular & Tee Beam Design

Description 2nd and 3rd Floor-B-2

General Information

Code Ref: ACI 318-02, 1997 UBC, 2003 IBC, 2003 NFPA 5000

Span	8.00 ft	f'c	5,000 psi
Depth	34.000 in	Fy	60,000 psi
Width	8.000 in	Concrete Wt.	145.0 pcf
		Seismic Zone	0
		End Fixity	Pinned-Pinned
Beam Weight Added Internally		Live Load acts with Short Term	

Reinforcing

	Rebar @ Center of Beam...			Rebar @ Left End of Beam...				Rebar @ Right End of Beam...			
	Count	Size	'd' from Top		Count	Size	'd' from Top		Count	Size	'd' from Top
#1	2	6	3.00 in	#1	2	6	3.00 in	#1	2	6	3.00 in
#2	2	6	17.00 in	#2	2	6	17.00 in	#2	2	6	17.00 in
#3	2	6	31.00 in	#3	2	6	31.00 in	#3	2	6	31.00 in

Load Factoring

Note: Load factoring supports 2003 IBC and 2003 NFPA 5000 by virtue of their references to ACI 318-02 for concrete design. Factoring of entered loads to ultimate loads within this program is according to ACI 318-02 C.2

Uniform Loads

	Dead Load	Live Load	Short Term	Start	End
#1	1.000 k	0.300 k	k	0.000 ft	8.000 ft

Summary

Beam Design OK

Span = 8.00ft, Width= 8.00in Depth = 34.00in

Maximum Moment : Mu	18.35 k-ft	Maximum Deflection	-0.0014 in
Allowable Moment : Mn*phi	177.11 k-ft		
Maximum Shear : Vu	3.30 k	Max Reaction @ Left	6.30 k
Allowable Shear : Vn*phi	69.09 k	Max Reaction @ Right	6.30 k

Shear Stirrups...

Stirrup Area @ Section	0.220 in2						
Region	0.000	1.333	2.667	4.000	5.333	6.667	8.000 ft
Max. Spacing	Not Req'd	Not Req'd	Not Req'd	Not Req'd	Not Req'd	Not Req'd	Not Req'd in
Max Vu	3.303	3.303	3.303	3.229	3.229	3.229	3.229 k

Bending & Shear Force Summary

Bending...	Mn*Phi	Mu, Eq. C-1	Mu, Eq. C-2	Mu, Eq. C-3
@ Center	177.11 k-ft	18.35 k-ft	13.76 k-ft	9.17 k-ft
@ Left End	177.11 k-ft	0.00 k-ft	0.00 k-ft	0.00 k-ft
@ Right End	177.11 k-ft	0.00 k-ft	0.00 k-ft	0.00 k-ft
Shear...	**Vn*Phi**	**Vu, Eq. C-1**	**Vu, Eq. C-2**	**Vu, Eq. C-3**
@ Left End	69.09 k	3.30 k	2.48 k	1.65 k
@ Right End	69.09 k	3.23 k	2.42 k	1.61 k

Deflection

Deflections...	Upward			Downward		
DL + [Bm Wt]	0.0000 in	at	0.0000 ft	-0.0011 in	at	4.0000 ft
DL + LL + [Bm Wt]	0.0000 in	at	0.0000 ft	-0.0014 in	at	4.0000 ft
DL + LL + ST + [Bm Wt]	0.0000 in	at	0.0000 ft	-0.0014 in	at	4.0000 ft

Reactions...	@ Left	@ Right
DL + [Bm Wt]]	5.096 k	5.096 k
DL + LL + [Bm Wt]	6.296 k	6.296 k
DL + LL + ST + [Bm Wt]	6.296 k	6.296 k

Title :
Dsgnr:
Description :

Job #
Date: 12:47PM, 13 NOV 06

Scope :

Description 2nd and 3rd Floor-B-2

Section Analysis

Evaluate Moment Capacity...	Center	Left End	Right End
X : Neutral Axis	3.570 in	3.570 in	3.570 in
a = beta * Xneutral	2.856 in	2.856 in	2.856 in
Compression in Concrete	97.104 k	97.104 k	97.104 k
Sum [Steel comp. forces]	8.484 k	8.484 k	8.484 k
Tension in Reinforcing	-105.600 k	-105.600 k	-105.600 k
Find Max As for Ductile Failure...			
X-Balanced	18.347 in	18.347 in	18.3469 in
Xmax = Xbal * 0.75	13.760 in	13.760 in	13.760 in
a-max = beta * Xbal	14.678 in	14.678 in	14.678 in
Compression in Concrete	374.278 k	374.278 k	374.278 k
Sum [Steel Comp Forces]	49.060 k	49.060 k	49.060 k
Total Compressive Force	423.338 k	423.338 k	423.338 k
AS Max = Tot Force / Fy	7.056 in2	7.056 in2	7.056 in2
Actual Tension As	1.760 OK	0.000 OK	0.000 OK

Additional Deflection Calcs

Neutral Axis	6.920 in	Mcr	68.12 k-ft
Igross	26,202.67 in4	Ms:Max DL + LL	12.59 k-ft
Icracked	5,295.72 in4	R1 = (Ms:DL+LL)/Mcr	5.410
Elastic Modulus	4,030.5 ksi	Ms:Max DL+LL+ST	12.59 k-ft
Fr = 7.5 * f'c^.5	530.330 psi	R2 = (Ms:DL+LL+ST)/Mcr	5.410
Z:Cracking	29.663 k/in	I:eff... Ms(DL+LL)	26,202.667 in4
		I:eff... Ms(DL+LL+ST)	26,202.667 in4
Eff. Flange Width	8.00 in		

ACI Factors (per ACI 318-02, applied internally to entered loads)

ACI C-1 & C-2 DL	1.400	ACI C-2 Group Factor	0.750	Add'l "1.4" Factor for Seismic	1.400
ACI C-1 & C-2 LL	1.700	ACI C-3 Dead Load Factor	0.900	Add'l "0.9" Factor for Seismic	0.900
ACI C-1 & C-2 ST	1.700	ACI C-3 Short Term Factor	1.300		
....seismic = ST * :	1.100				

Title :
Dsgnr:
Description :

Job #
Date: 12:58PM, 13 NOV 06

Scope :

Rev: 580000
User: KW-0602861, Ver 5.8.0, 1-Dec-2003
(c)1983-2003 ENERCALC Engineering Software

Concrete Rectangular & Tee Beam Design

Description Slb-1

General Information

Code Ref: ACI 318-02, 1997 UBC, 2003 IBC, 2003 NFPA 5000

Span	6.50 ft	f'c	4,000 psi
Depth	8.000 in	Fy	60,000 psi
Width	36.000 in	Concrete Wt.	145.0 pcf
		Seismic Zone	0
		End Fixity	Pinned-Pinned
Beam Weight Added Internally		Live Load acts with Short Term	

Reinforcing

	Rebar @ Center of Beam...			Rebar @ Left End of Beam...			Rebar @ Right End of Beam...			
	Count	Size	'd' from Top	Count	Size	'd' from Top	Count	Size	'd' from Top	
#1	7	5	5.50 in	7	5	5.50 in	7	5	5.50 in	

Load Factoring

Note: Load factoring supports 2003 IBC and 2003 NFPA 5000 by virtue of their references to ACI 318-02 for concrete design. Factoring of entered loads to ultimate loads within this program is according to ACI 318-02 C.2

Uniform Loads

	Dead Load	Live Load	Short Term	Start	End
#1	1.400 k	0.400 k	k	0.000 ft	6.500 ft

Summary

Beam Design OK

Span = 6.50ft, Width= 36.00in Depth = 8.00in

Maximum Moment : Mu	16.09 k-ft	Maximum Deflection	-0.0152 in
Allowable Moment : Mn*phi	48.48 k-ft		
Maximum Shear : Vu	8.55 k	Max Reaction @ Left	6.79 k
Allowable Shear : Vn*phi	54.95 k	Max Reaction @ Right	6.79 k

Shear Stirrups...

Stirrup Area @ Section 0.440 in2

Region	0.000	1.083	2.167	3.250	4.333	5.417	6.500 ft
Max. Spacing	Not Req'd	Not Req'd	Not Req'd	Not Req'd	Not Req'd	Not Req'd	Not Req'd in
Max Vu	8.553	6.652	3.326	3.247	3.247	6.573	8.474 k

Bending & Shear Force Summary

Bending...	Mn*Phi	Mu, Eq. C-1	Mu, Eq. C-2	Mu, Eq. C-3
@ Center	48.48 k-ft	16.09 k-ft	12.07 k-ft	8.03 k-ft
@ Left End	48.48 k-ft	0.00 k-ft	0.00 k-ft	0.00 k-ft
@ Right End	48.48 k-ft	0.00 k-ft	0.00 k-ft	0.00 k-ft
Shear...	**Vn*Phi**	**Vu, Eq. C-1**	**Vu, Eq. C-2**	**Vu, Eq. C-3**
@ Left End	54.95 k	8.55 k	6.41 k	4.27 k
@ Right End	54.95 k	8.47 k	6.36 k	4.23 k

Deflection

Deflections...	Upward			Downward		
DL + [Bm Wt]	0.0000 in	at	6.5000 ft	-0.0123 in	at	3.2500 ft
DL + LL + [Bm Wt]	0.0000 in	at	6.5000 ft	-0.0152 in	at	3.2500 ft
DL + LL + ST + [Bm Wt]	0.0000 in	at	6.5000 ft	-0.0152 in	at	3.2500 ft

Reactions...	@ Left	@ Right
DL + [Bm Wt]]	5.492 k	5.492 k
DL + LL + [Bm Wt]	6.792 k	6.792 k
DL + LL + ST + [Bm Wt]	6.792 k	6.792 k

Title :
Dsgnr:
Description :

Job #
Date: 12:58PM, 13 NOV 06

Scope :

Description Slb-1

Section Analysis

Evaluate Moment Capacity...	Center	Left End	Right End
X : Neutral Axis	1.250 in	1.250 in	1.250 in
a = beta * Xneutral	1.063 in	1.063 in	1.063 in
Compression in Concrete	130.050 k	130.050 k	130.050 k
Sum [Steel comp. forces]	0.000 k	0.000 k	0.000 k
Tension in Reinforcing	-130.200 k	-130.200 k	-130.200 k
Find Max As for Ductile Failure...			
X-Balanced	3.255 in	3.255 in	3.2551 in
Xmax = Xbal * 0.75	2.441 in	2.441 in	2.441 in
a-max = beta * Xbal	2.767 in	2.767 in	2.767 in
Compression in Concrete	253.996 k	253.996 k	253.996 k
Sum [Steel Comp Forces]	0.000 k	0.000 k	0.000 k
Total Compressive Force	253.996 k	253.996 k	253.996 k
AS Max = Tot Force / Fy	4.233 in2	4.233 in2	4.233 in2
Actual Tension As	2.170 OK	0.000 OK	0.000 OK

Additional Deflection Calcs

Neutral Axis	1.875 in	Mcr	15.18 k-ft
Igross	1,536.00 in4	Ms:Max DL + LL	11.04 k-ft
Icracked	308.49 in4	R1 = (Ms:DL+LL)/Mcr	1.375
Elastic Modulus	3,605.0 ksi	Ms:Max DL+LL+ST	11.04 k-ft
Fr = 7.5 * f'c^.5	474.342 psi	R2 = (Ms:DL+LL+ST)/Mcr	1.375
Z:Cracking	67.453 k/in	I:eff... Ms(DL+LL)	1,536.000 in4
		I:eff... Ms(DL+LL+ST)	1,536.000 in4
Eff. Flange Width	36.00 in		

ACI Factors (per ACI 318-02, applied internally to entered loads)

ACI C-1 & C-2 DL	1.400	ACI C-2 Group Factor	0.750	Add"l "1.4" Factor for Seismic	1.400
ACI C-1 & C-2 LL	1.700	ACI C-3 Dead Load Factor	0.900	Add"l "0.9" Factor for Seismic	0.900
ACI C-1 & C-2 ST	1.700	ACI C-3 Short Term Factor	1.300		
....seismic = ST * :	1.100				

P44 of 69

Title :
Dsgnr:
Description :

Job #
Date: 7:13AM, 6 DEC 06

Scope :

Multi-Span Concrete Beam

Description ~~A-10~~ 13-3

General Information

Code Ref: ACI 318-02, 1997 UBC, 2003 IBC, 2003 NFPA 5000

Fy	60,000.0 psi	Spans Considered Continuous Over Supports		ACI Dead Load Factor	1.40
f'c	3,000.0 psi	Stirrup Fy	40,000.0 psi	ACI Live Load Factor	1.70

Concrete Member Information

Description			1	2
Span		ft	7.00	6.00
Beam Width		in	12.00	12.00
Beam Depth		in	16.00	16.00
End Fixity			Pin-Pin	Pin-Pin
Reinforcing	Center	Area	1.30in2	1.30in2
		Bar Depth	13.00in	13.00in
	Left	Area	1.30in2	1.30in2
		Bar Depth	3.00in	3.00in
	Right	Area	1.30in2	1.30in2
		Bar Depth	3.00in	3.00in

Loads

Using Live Load This Span ??		Yes	Yes
Dead Load	k/ft	4.000	4.000
Live Load	k/ft	1.200	1.200

Results

		Beam OK	Beam OK
Mmax @ Cntr	k-ft	28.51	16.91
@ X =	ft	2.75	3.88
Mn * Phi	k-ft	68.55	68.55
Max @ Left End	k-ft	0.00	-41.06
Mn * Phi	k-ft	68.55	68.55
Max @ Right End	k-ft	-41.06	0.00
Mn * Phi	k-ft	68.55	68.55
		Bending OK	Bending OK
Shear @ Left	k	20.87	29.76
Shear @ Right	k	32.61	16.08

Reactions & Deflections

DL @ Left	k	10.93	32.65
LL @ Left	k	3.28	9.80
Total @ Left	k	14.21	42.45
DL @ Right	k	32.65	8.42
LL @ Right	k	9.80	2.52
Total @ Right	k	42.45	10.94
Max. Deflection	in	-0.022	-0.008
@ X =	ft	3.08	3.68
Inertia : Effective	in4	1,937.86	1,937.86

Shear Stirrups

Stirrup Rebar Area	in2	0.220	0.220
Spacing @ Left	in	6.50	6.50
Spacing @ .2*L	in	6.50	6.50
Spacing @ .4*L	in	Not Req'd	6.50
Spacing @ .6*L	in	6.50	Not Req'd
Spacing @ .8*L	in	6.50	Not Req'd
Spacing @ Right	in	6.50	6.50

Title :
Dsgnr:
Description :

Job #
Date: 7:13AM, 6 DEC 06

Scope :

Multi-Span Concrete Beam

Description 3b3

Query Values

Location	ft	0.00	0.00
Moment	k-ft	0.0	-41.1
Shear	k	20.9	29.8
Deflection	in	0.0000	0.0000

c) COLUMNS

* ALL CONCRETE COL'S - MIN. REINFORCING ($A^{s} = .01A$)

* INTERIOR STEEL COL'S, $L = 10'$

TOTAL LOAD: $\overbrace{(.06 \times 10 \times 7) + [(.21 + .1) \times 7]}^{\text{ROOF}} \times 7 +$

$+ \overbrace{[(.14 + .04) \times 7 + (.65)]}^{\text{3 FLR.}} \times 7 +$

$+ \overbrace{[(.14 + .04) \times 10]}^{\text{2 FL}} \times 7 + \approx 50k \downarrow$

$F_y = 46$ ksi

COLUMNS

Square structural tubing

Allowable concentric loads in kips

Nominal Size		4 x 4					3 x 3		
Thickness		1/2	3/8	5/16	1/4	3/16	5/16	1/4	3/16
Wt./ft.		21.63	17.87	14.83	12.21	9.42	10.58	8.81	6.87
F_y		46 ksi							
	0	176	140	120	99	76	86	71	56
	2	168	134	115	95	73	80	67	53
	3	162	130	112	92	71	77	64	50
	4	156	126	108	89	69	73	61	48
	5	150	121	104	86	67	68	57	45
	6	143	115	100	83	64	63	53	42
	7	135	110	95	79	61	57	49	39
	8	126	103	90	75	58	51	44	35
	9	117	97	84	70	55	44	38	31
	10	108	89	78	65	51	37	33	27

o radius of gyration

PL'S: $t_1 = 4\sqrt{\frac{50}{9 \times 144}} = .99''$, USE $12'' \times 12'' \times 1''$

$t_2 = 4\sqrt{\frac{50}{9 \times 96}} = .96''$, USE $8'' \times 12'' \times 1''$

* SAME USE FOR EXTERIOR STL. COL'S

5)

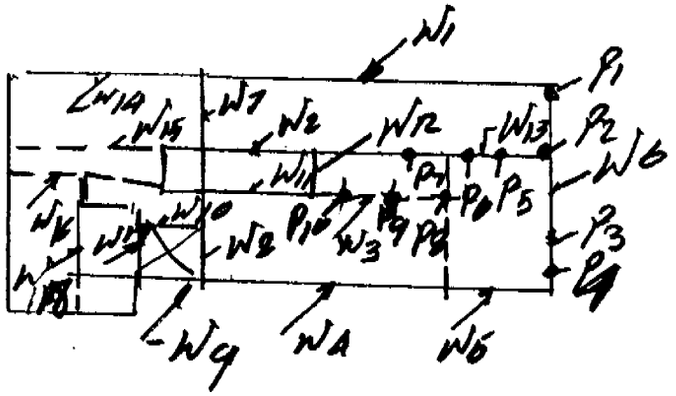

LOADS:

ROOF TERRACE: DL = .21 K/FT²; LL = .10 K/FT²

FLOORS (3RD, 2ND, 1ST): DL = .14 K/FT²; LL = .04 K/FT²; (BALC. = .10 K/FT²

1ST. FLOOR DECK: DL = .185 K/FT²; LL = .10 K/FT²

WALLS = 65 PSF

BEAMS/COL'S = 100 PSF (3 x 12) = 512

GRADE BM'S = 450 PSF (14" x 30")

W_1 $\begin{cases} DL = (1.60) + (.14 \times 7 \times 3) + (.065 \times 40) + (.45) + = 7.60 \text{ K/FT} \\ LL = (.42) + (.04 \times 7 \times 3) + = 1.01 \text{ K/FT} \end{cases}$

(1.60 ← P.9; (.14 × 7 × 3) ← 3+2+1 FL's)

W_2 $\begin{cases} DL = (.21 \times 7) + (.14 \times 7 \times 3) + (.065 \times 45) + (.45) + = 5.08 \text{ K/FT} \\ LL = (.1 \times 7) + (.04 \times 7 \times 3) + = 1.60 \text{ K/FT} \end{cases}$

W_3 $\begin{cases} DL = (.14 \times 10) + (.065 \times 7) + = 1.90 \text{ K/FT} \\ LL = (.04 \times 10) + = .40 \text{ K/FT} \end{cases}$

$W_4 = W_1$;

W_5 $\begin{cases} DL = (2.8) + (.14 \times 10 \times 3) + (.065 \times 40) + (.45) + = 10.1 \text{ K/FT} \\ LL = (1.0) + (.04 \times 10 \times 3) + = 2.2 \text{ K/FT} \end{cases}$

(2.8 ← P.9)

W_6 $\begin{cases} DL = (.21 \times 4) + (.14 \times 4 \times 3) + (.14 \times 2 \times 3) + (.065 \times 40) + \\ \quad + (.45) + = 6.5 \text{ K/FT} \\ LL = (.1 \times 4) + (.04 \times 4 \times 3) + (.1 \times 2 \times 3) + = 1.5 \text{ K/FT} \end{cases}$

(.14 × 2 × 3) ← BALCONY

W_7 $\begin{cases} DL = (.24 \times 10) + (.14 \times 18 \times 2) + (.14 \times 4) + (.185 \times 4) + \\ \quad + (.1 \times 4 \times 3) + (.065 \times 7) + = 8.0 \text{ K/FT} \\ LL = (.1 \times 10) + (.04 \times 4 \times 3) + (.1 \times 6 \times 3) + = 3.3 \text{ K/FT} \end{cases}$

$W_8 = W_7$;

W_9 $\begin{cases} DL = \overset{\text{H. ROOF}}{(.13 \times 3)} + \overset{\text{WALL}}{(.065 \times 40)} + \overset{\text{PIT}}{(.1 \times 4)} + \overset{\text{GP}}{(.45)} + = \underline{4.0^{k}/FT} \\ LL = (.03 \times 3) + = \underline{.10^{k}/FT} \end{cases}$

W_{10} $\begin{cases} DL = (.13 \times 3) + (.065 \times 40) + (.21 \times 6) + (.14 \times 6 \times 2) + \\ \quad + (.14 \times 3.5) + (.4) + (.45) + = \underline{7.3^{k}/FT} \\ LL = (.03 \times 3) + (.1 \times 6) + (.1 \times 6 \times 3) + = \underline{2.5^{k}/FT} \end{cases}$

$W_{11} = W_2$;

W_{12} $\begin{cases} DL = \overset{\text{STAIR}}{(.15 \times 7 \times 3)} + (.065 \times 40) + (.14 \times 4 \times 2) + (.45) + = \underline{7.4^{k}/FT} \\ LL = (.1 \times 7 \times 3) + (.04 \times 4 \times 2) + = \underline{2.5^{k}/FT} \end{cases}$

W_{13} $\begin{cases} DL = (.14 \times 17) + (.065 \times 7) + (.45) + = \underline{3.3^{k}/FT} \\ LL = (.04 \times 17) + = \underline{.70^{k}/FT} \end{cases}$

W_{14} $\begin{cases} DL = (.135 \times 8.5) + (.3) + (.065 \times 7) + (.45) + = \underline{2.8^{k}/FT} \\ LL = (.1 \times 8.5) + = \underline{.9^{k}/FT} \end{cases}$

W_{15} $\begin{cases} DL = (.135 \times 10) + (.065 \times 7) + (.45) + (.065 \times 10) + = \underline{3.4^{k}/FT} \\ LL = (.1 \times 10) + = \underline{1.0^{k}/FT} \end{cases}$

W_{16} $\begin{cases} DL = (.135 \times 7) + (.065 \times 7) + (.45) + = \underline{2.2^{k}/FT} \\ LL = (.1 \times 7) + = \underline{.70^{k}/FT} \end{cases}$

$$W_{17}\begin{cases} DL = (.13\times3)+(.24\times3)\ (.065\times40)+(.21\times5)+ \\ \quad +(.45)+ = \underline{5.3\ K/FT} \\ LL = (.03\times3)+(.1\times3)+(.1\times5)+ = \underline{1.0\ K/FT} \end{cases}$$

$$W_{18} = W_{17}\,;$$

$$P_1^{TOTAL} = \left[\overset{RF}{(.31\times4)}+\overset{3+2}{(.18\times4\times2)}+\overset{3+2\,BALK}{(.24\times4)}+\overset{RB}{(.1\times4)}+\overset{BMKG}{(.1\times3\times2)}\right]\times$$
$$\times5+\underset{LOL}{(.2\times40)}+ = 32K\downarrow$$

$$P_3^{TOTAL} = P_1\,;$$

$$P_2^{TOTAL} = P_1+(.18\times17\times4)+ = 45K\downarrow$$

$$P_4^{TOTAL} = P_1\,;$$

$$P_5^{TOTAL} = \underset{RF}{\overset{P.9}{(9.1\times4)}}+\overset{FL's}{(.2\times17\times2\times8)}+\overset{BMS}{(.2\times3\times8)}+(.2\times40)+ = 105K$$

$$P_6^{TOTAL} = P_5\,;$$

$$P_7^{TOTAL} = P_5\,;$$

$P_8; P_9; P_{10} = 50K$
(P.46)

---

* Use 14" ϕ Augercast Piles w/ 35 tons (70 kips) capacity.

* Max. Pile Spacing:

$CW_1 = \frac{70}{(7.6+1.0)} \approx 8'$ max. o/c.

$CW_2 = \frac{70}{6.6} \approx 10'$

$CW_3 = \frac{70}{2.3} \approx 30'$

$CW_4 = 8'$

$CW_5 = \frac{70}{12.3} \approx 5.5'$

$CW_6 = \frac{70}{8} \approx 8'$

$CW_7 = \frac{70}{11.3} \approx 6'$

$CW_8 \approx 6'$

$CW_9 = \frac{70}{4.1} \approx 17'$

$CW_{10} \approx \frac{70}{9.8} \approx 7'$

$CW_{11} \approx 10'$

$CW_{12} \approx \frac{70}{9.9} \approx 7'$

$CW_{13} \approx \frac{70}{4} \approx 17'$

$CW_{14} = \frac{70}{3.7} \approx 18'$

$CW_{15} = \frac{70}{4.4} \approx 15'$

$CW_{16} = \frac{70}{2.9} \approx 24'$

* ALL OTHER PILE LOCATIONS - AS REQ'D.

6) A) Walls:

a) 1st to 2nd floor (exterior)

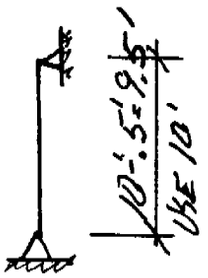

DL = 2.8+(14×10×2)+(.05×24) 7.30 K/ft.
LL = (.1×10)+(.04×10×2) = 1.80 K/ft
WIND = 61 psf

b) 2nd - Roof (exterior): L = 10'

DL = (7.3-1.35-.65) = 5.30 K/ft
LL = (1.8-.4) = 1.40 K/ft
WIND = 61 psf

c) 1st to 2nd floor (interior): L = 10'-0"

DL = (6.9)+(.14×17×2)+(.065×20) += 13 K/ft
LL = (2.9)+(.04×17×2) += 4.3 K/ft
WIND = 0

d) All other Block Walls - similar to above.

B). FINISH WALL COL'S.

a) 1ST. TO 2ND. FLOOR: L = 10'-0" / SAME FOR FLR'S ABOVE /

*) @ 3'-0" OPEN'S: { DL = (7.3 × 2.84) = 20.8 K (↳ 16" o/c); LL = (1.8 × 2.84) = 5.2 K; WIND = .061 × 2.84 / 1.34 = .13 K/FT }

*): FOR 7'-0" OPEN'S - USE COLUMNS

b) 3'-6" OPEN'S: L = 10'-0" (16" o/c)

{ DL = (8.8 - .65 - .45 - .135 × 8) × 3.09 = 20.5 K; LL = (3.2 - .8) × 3.09 = 7.42 K; WIND = .061 × 3.09 / 1.34 = .14 K/FT }

c) ALL OTHER MASONRY FLOOR COL'S - SIMILAR TO ABOVE.

Title :
Dsgnr:
Description :

Job #
Date: 9:17AM, 31 MAY 06

Scope :

Rev: 580000
User: KW-0602861, Ver 5.8.0, 1-Dec-2003
(c)1983-2003 ENERCALC Engineering Software

Masonry Wall Design

Description 1st to 2nd floor-exterior

General Information

Code Ref: ACI 530-02

Wall Height	10.00 ft	Seismic Factor	0.0000	f'm	1,500.0 psi
Parapet Height	0.00 ft	Calc of Em = f'm *	900.00	Fs	24,000.0 psi
		Duration Factor	1.330	Special Inspection	
Thickness	8.0 in	Wall Wt Mult.	1.000	Grout @ Rebar Only	
Rebar Size	5			Medium Weight Block	
Rebar Spacing	40 in			Equivalent	
Depth to Rebar	3.810 in @ Center			Solid Thickness	4.700 in

Loads

Uniform Load		Concentric Axial Load		Wind Load	61.000 psf
Dead Load	7,300.000 #/ft	Dead Load	0.000 #/ft		
Live Load	1,800.000 #/ft	Live Load	0.000 #/ft		
Load Eccentricity	0.000 in	Roof Load			
Floor Load					

Design Values

E	1,350,000 psi	Rebar Area	0.093 in2	np	0.04370	j	0.91495
n : Es / Em	21.481	Radius of Gyration	2.521 in	k	0.25514	2 / kj	8.56756
Wall Weight	53.000 psf	Moment of Inertia	358.350 in4				

Max Allow Axial Stress = 0.25 f'm (1-(h/140r)^2) * Spinsp	331.64 psi
Allow Masonry Bending Stress = 0.33 f'm * Spinsp =	495.00 psi
Allow Steel Bending Stress =	24,000.00 psi

Load Combination & Stress Details Summary

	Moment	Axial Load	Bending Stresses Steel	Masonry	Axial Compression
Top of Wall	in-#	lbs	psi	psi	psi
DL + LL	0.0	9,100.0	0.0	0.0	161.35
DL + LL + Wind	0.0	9,100.0	0.0	0.0	161.35
DL + LL + Seismic	0.0	9,100.0	0.0	0.0	161.35
Between Base & Top of Wall					
DL + LL	0.0	9,365.0	0.0	0.0	166.05
DL + LL + Wind	9,150.0	9,365.0	28,223.7	450.0	166.05
DL + LL + Seismic	0.0	9,365.0	0.0	0.0	166.05

Summary

10.00ft high wall with 0.00ft parapet, Med Wt Block w/ 8.00in wall w/ #5 bars at 40.00ino.c. at center

Max. Bending Compressive Stress	616.08	OK
Allowable	658.35	OK
Max. Axial Only Compressive Stress	166.05	psi
Allowable	331.64	OK
Max Steel Bending Stress	28,223.68	psi
Allowable	31,920.00	OK

P56 of 69

Title :
Dsgnr:
Description :

Job #
Date: 9:17AM, 31 MAY 06

Scope :

Description 1st to 2nd floor-exterior

Final Loads & Moments

Wall Weight moment @ Mid Ht	265.00 lbs	Wind Moment @ Mid Ht	9,150.00 in-#
		Seismic Moment @ Mid Ht	0.00 in-#
Dead Load Moment @ Top of Wall	0.00 in-#		
Dead Load Moment @ Mid Ht	0.00 in-#	Total Dead Load	7,300.00 lbs
		Total Live Load	1,800.00 lbs
Live Load Moment @ Top of Wall	0.00 in-#		
LiveLoad Moment @ Mid Ht	0.00 in-#		

Maximum Allow Moment for Applied Axial Load = 7,780.70 in-#
Maximum Allow Axial Load for Applied Moment = 18,704.38 lbs

Title :
Dsgnr:
Description :

Job #
Date: 9:19AM, 31 MAY 06

Scope :

Rev: 580000
User: KW-0602861, Ver 5.8.0, 1-Dec-2003
(c)1983-2003 ENERCALC Engineering Software

Masonry Wall Design

Description 2nd floor to roof -exterior

General Information

Code Ref: ACI 530-02

Wall Height	10.00 ft	Seismic Factor	0.0000	f'm	1,500.0 psi
Parapet Height	0.00 ft	Calc of Em = f'm *	900.00	Fs	24,000.0 psi
		Duration Factor	1.330	Special Inspection	
Thickness	8.0 in	Wall Wt Mult.	1.000	Grout @ Rebar Only	
Rebar Size	5			Medium Weight Block	
Rebar Spacing	40 in			Equivalent	
Depth to Rebar	3.810 in @ Center			Solid Thickness	4.700 in

Loads

Uniform Load		Concentric Axial Load		Wind Load	61.000 psf
Dead Load	5,300.000 #/ft	Dead Load	0.000 #/ft		
Live Load	1,400.000 #/ft	Live Load	0.000 #/ft		
Load Eccentricity	0.000 in	Roof Load			
Floor Load					

Design Values

E	1,350,000 psi	Rebar Area	0.093 in2	np	0.04370	j	0.91495
n : Es / Em	21.481	Radius of Gyration	2.521 in	k	0.25514	2 / kj	8.56756
Wall Weight	53.000 psf	Moment of Inertia	358.350 in4				

Max Allow Axial Stress = 0.25 f'm (1-(h/140r)^2) * SpInsp 331.64 psi
Allow Masonry Bending Stress = 0.33 f'm * SpInsp = 495.00 psi
Allow Steel Bending Stress = 24,000.00 psi

Load Combination & Stress Details Summary

	Moment	Axial Load	Bending Stresses Steel	Masonry	Axial Compression
Top of Wall	in-#	lbs	psi	psi	psi
DL + LL	0.0	6,700.0	0.0	0.0	118.79
DL + LL + Wind	0.0	6,700.0	0.0	0.0	118.79
DL + LL + Seismic	0.0	6,700.0	0.0	0.0	118.79
Between Base & Top of Wall					
DL + LL	0.0	6,965.0	0.0	0.0	123.49
DL + LL + Wind	9,150.0	6,965.0	28,223.7	450.0	123.49
DL + LL + Seismic	0.0	6,965.0	0.0	0.0	123.49

Summary

10.00ft high wall with 0.00ft parapet, Med Wt Block w/ 8.00in wall w/ #5 bars at 40.00ino.c. at center

Max. Bending Compressive Stress	573.53	OK
Allowable	658.35	OK
Max. Axial Only Compressive Stress	123.49	psi
Allowable	331.64	OK
Max Steel Bending Stress	28,223.68	psi
Allowable	31,920.00	OK

P52 of 69

Title :
Dsgnr:
Description :

Job #
Date: 9:19AM, 31 MAY 06

Scope :

Description 2nd floor to roof -exterior

Final Loads & Moments

Wall Weight moment @ Mid Ht	265.00	lbs	Wind Moment @ Mid Ht	9,150.00	in-#
			Seismic Moment @ Mid Ht	0.00	in-#
Dead Load Moment @ Top of Wall	0.00	in-#			
Dead Load Moment @ Mid Ht	0.00	in-#	Total Dead Load	5,300.00	lbs
			Total Live Load	1,400.00	lbs
Live Load Moment @ Top of Wall	0.00	in-#			
LiveLoad Moment @ Mid Ht	0.00	in-#			

Maximum Allow Moment for Applied Axial Load = 7,780.70 in-#
Maximum Allow Axial Load for Applied Moment = 18,704.38 lbs

Title :
Dsgnr:
Description :

Job #
Date: 9:21AM, 31 MAY 06

Scope :

Rev: 580000
User: KW-0602861, Ver 5.8.0, 1-Dec-2003
(c)1983-2003 ENERCALC Engineering Software

Masonry Wall Design

Description 1st floor to 2nd -interior

General Information

Code Ref: ACI 530-02

Wall Height	10.00 ft	Seismic Factor	0.0000	f'm	1,500.0 psi
Parapet Height	0.00 ft	Calc of Em = f'm *	900.00	Fs	24,000.0 psi
		Duration Factor	1.330	Special Inspection	
Thickness	8.0 in	Wall Wt Mult.	1.000	Grout @ Rebar Only	
Rebar Size	5			Medium Weight Block	
Rebar Spacing	40 in			Equivalent	
Depth to Rebar	3.810 in @ Center			Solid Thickness	4.700 in

Loads

Uniform Load		Concentric Axial Load		Wind Load	
Dead Load	12,000.000 #/ft	Dead Load	0.000 #/ft		10.000 psf
Live Load	3,100.000 #/ft	Live Load	0.000 #/ft		
Load Eccentricity	0.000 in	Floor Load			
Floor Load					

Design Values

E	1,350,000 psi	Rebar Area	0.093 in2	np	0.04370	j	0.91495
n : Es / Em	21.481	Radius of Gyration	2.521 in	k	0.25514	2 / kj	8.56756
Wall Weight	53.000 psf	Moment of Inertia	358.350 in4				

Max Allow Axial Stress = 0.25 f'm (1-(h/140r)^2) * SpInsp 331.64 psi
Allow Masonry Bending Stress = 0.33 f'm * SpInsp = 495.00 psi
Allow Steel Bending Stress = 24,000.00 psi

Load Combination & Stress Details Summary

	Moment	Axial Load	Bending Stresses Steel	Masonry	Axial Compression
Top of Wall	in-#	lbs	psi	psi	psi
DL + LL	0.0	15,100.0	0.0	0.0	267.73
DL + LL + Wind	0.0	15,100.0	0.0	0.0	267.73
DL + LL + Seismic	0.0	15,100.0	0.0	0.0	267.73
Between Base & Top of Wall					
DL + LL	0.0	15,365.0	0.0	0.0	272.43
DL + LL + Wind	1,500.0	15,365.0	4,626.8	73.8	272.43
DL + LL + Seismic	0.0	15,365.0	0.0	0.0	272.43

Summary

10.00ft high wall with 0.00ft parapet, Med Wt Block w/ 8.00in wall w/ #5 bars at 40.00ino.c. at center

Max. Bending Compressive Stress	272.43	OK
Allowable	495.00	OK
Max. Axial Only Compressive Stress	272.43	psi
Allowable	331.64	OK
Max Steel Bending Stress	4,626.83	psi
Allowable	31,920.00	OK

Title :
Dsgnr:
Description :

Job #
Date: 9:21AM, 31 MAY 06

Scope :

Description 1st floor to 2nd -interior

Final Loads & Moments

Wall Weight moment @ Mid Ht	265.00	lbs	Wind Moment @ Mid Ht	1,500.00 in-#
			Seismic Moment @ Mid Ht	0.00 in-#
Dead Load Moment @ Top of Wall	0.00	in-#		
Dead Load Moment @ Mid Ht	0.00	in-#	Total Dead Load	12,000.00 lbs
			Total Live Load	3,100.00 lbs
Live Load Moment @ Top of Wall	0.00	in-#		
LiveLoad Moment @ Mid Ht	0.00	in-#		

Maximum Allow Moment for Applied Axial Load =	7,780.70	in-#
Maximum Allow Axial Load for Applied Moment =	18,704.38	lbs

Title :
Dsgnr:
Description :

Job #
Date: 9:35AM, 31 MAY 06

Scope :

Rev: 580000
User: KW-0602861, Ver 5.8.0, 1-Dec-2003
(c)1983-2003 ENERCALC Engineering Software

Masonry Flush Wall Pilaster/Column

Description 3.5ft opening

General Information

Code Ref: ACI 530-02

Wall Height	10.000 ft	Block Type	Medium Wt	f'm	1,500.0 psi
Thickness	8 in	Bearing Plate Width	16.000 in	Fs	24,000.0 psi
Rebar Size	5	Column Width	16.000 in	Em = f'm *	900.0
Rebar Spacing	8.000 in			Special Inspection	
Rebar Location	Edge	Column Width used	16.000 in	Solid Grouted	
				E	1350,000.0 psi
Seismic Factor	0.000	Load Duration Factor	1.330	n	21.481
Seismic Zone	0	Wall Wt Multiplier	1.000		

Applied Loads

Uniform Loads		Girder Load	
Dead Load	0.00 #/ft	Dead Load	20,500.00 lbs
Live Load	0.00 #/ft	Live Load	7,420.00 lbs
...eccentricity	0.000 in	...eccentricity	0.000 in
...load Type	Roof	...load Type	Floor
Wind Load	141.00 psf		

Design Values

Allow Brg. Stress	390.00 psi	Rebar Area		0.620	in2
Allow Axial Stress	352.08 psi	Rebar Depth		5.250	in
Reduction Factor	0.85	Wall Weight		78.000	psf
Allow Masonry Bending	495.00 psi	np	0.1586	k	0.4265
		j	0.8578	2/kj	5.4669
Max. Allow Moment w/o Axial Load	3,327.55 ft-#	Radius of Gyration		2.205	in
Max. Axial Load w/o Moment	42,813.02 lbs	Moment of Inertia		443.320	in4

Load Combinations & Stress Details

	Moment	Axial			
Top of Wall	ft-#	lbs	Steel	Masonry	Axial Stress
DL + LL	0.00	27,920.0	0.00	0.00	229.61
Btwn. Base & Top of Wall					
DL + LL + Wind	2,350.00	28,440.0	10,099.25	349.58	233.86
DL + LL + Seismic	0.00	28,440.0	0.00	0.00	233.88

Required Bearing Area 71.59 in2 — Req'd Bearing Length 4.47 in

Summary

Pilaster Design OK

10.00ft high, 8.00in thick w/ #5 @ 8.00in o.c. at edge, Special Inspection, Solid Grouted

Max. Bending + Axial Comp. Stress	583.46	psi
Allowable	658.35	OK
Max. Axial Only Compressive Stress	229.61	psi
Allowable	352.08	OK
Max Steel Bending Stress	10,099.25	psi
Allowable	31,920.00	OK

Summary of Loads & Moments

			@ TOW	@ Mid-Ht
Girder + Uniform Dead Loads	20,500.00 lbs			
Girder + Uniform Live Loads	7,420.00 lbs	Girder DL Moments	0.0	0.0 ft-#
Wall Weight @ mid-height	520.00 lbs	Girder LL Moments	0.0	0.0 ft-#
DL Moments @ mid-height	0.00 ft-#	Wind Moment @ Mid-Ht		2,350.00 ft-#
LL Moments @ mid-height	0.00 ft-#	Seismic Moment @ Mid-Ht		0.00 ft-#

7). a). INTERIOR CONCRETE WALL - TYPICAL.

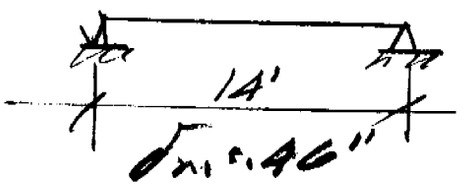

$W \begin{cases} LL = 100 \text{ PSF} \\ DL = 50 \text{ PSF} \end{cases}$ (PAF=42)

b). 5' PARAPET

$M_{ULT} = .061 \times 5^2/2 \times 1.3 = 1.0 \text{ K-FT/LIN. FT}$

$A_s^{REQ} = \frac{1.0}{4 \times 3.5 \times .85} = .084 \text{ IN}^2/\text{FT}$

USE #5 @ 24" O/C IN FILL CELLS W/ TOP CAP ($A_s = .30 \text{ IN}^2 > .17 \text{ IN}^2$ - OK)

c). C W/ : $M_U = (5.4 \times 1.4 + .45 \times 1.7) \times 11^2/2 =$

$= 112 \text{ K-FT}$

TRY 14" x 24": $A_s^{REQ} = \frac{112}{4 \times 20} = 1.4 \text{ IN}^2$ (3 #7 T&B)

* ALL OTHER "GB's" - SIMILAR TO ABOVE W/ 3 #6 T&B (SMALLER SPANS) (USE 30" DEPTH)

Title :
Dsgnr:
Description :

Job #
Date: 9:47AM, 31 MAY 06

Scope :

Rev: 580000
User: KW-0602861, Ver 5.8.0, 1-Dec-2003
(c)1983-2003 ENERCALC Engineering Software

Concrete Rectangular & Tee Beam Design

Description stair

General Information

Code Ref: ACI 318-02, 1997 UBC, 2003 IBC, 2003 NFPA 5000

Span	14.00 ft	f'c	3,000 psi
Depth	7.000 in	Fy	60,000 psi
Width	12.000 in	Concrete Wt.	145.0 pcf
		Seismic Zone	0
		End Fixity	Pinned-Pinned
Beam Weight Added Internally		Live Load acts with Short Term	

Reinforcing

Rebar @ Center of Beam...				Rebar @ Left End of Beam...				Rebar @ Right End of Beam...			
	Count	Size	'd' from Top		Count	Size	'd' from Top		Count	Size	'd' from Top
#1	2	5	5.50 in	#1	2	5	5.50 in	#1	2	5	5.50 in

Load Factoring

Note: Load factoring supports 2003 IBC and 2003 NFPA 5000 by virtue of their references to ACI 318-02 for concrete design. Factoring of entered loads to ultimate loads within this program is according to ACI 318-02 C.2

Uniform Loads

	Dead Load	Live Load	Short Term	Start	End
#1	0.050 k	0.100 k	k	0.000 ft	14.000 ft

Summary

Beam Design OK

Span = 14.00ft, Width= 12.00in Depth = 7.00in

Maximum Moment : Mu	8.78 k-ft	Maximum Deflection	-0.4331 in
Allowable Moment : Mn*phi	13.65 k-ft		
Maximum Shear : Vu	2.35 k	Max Reaction @ Left	1.64 k
Allowable Shear : Vn*phi	17.37 k	Max Reaction @ Right	1.64 k

Shear Stirrups...

Stirrup Area @ Section 0.440 in2

Region	0.000	2.333	4.667	7.000	9.333	11.667	14.000 ft
Max. Spacing	Not Req'd	Not Req'd	Not Req'd	Not Req'd	Not Req'd	Not Req'd	Not Req'd in
Max Vu	2.348	1.686	0.843	0.823	0.823	1.666	2.328 k

Bending & Shear Force Summary

Bending...	Mn*Phi	Mu, Eq. C-1	Mu, Eq. C-2	Mu, Eq. C-3
@ Center	13.65 k-ft	8.78 k-ft	6.59 k-ft	2.97 k-ft
@ Left End	13.65 k-ft	0.00 k-ft	0.00 k-ft	0.00 k-ft
@ Right End	13.65 k-ft	0.00 k-ft	0.00 k-ft	0.00 k-ft
Shear...	**Vn*Phi**	**Vu, Eq. C-**	**Vu, Eq. C-**	**Vu, Eq. C-**
@ Left End	17.37 k	2.35 k	1.76 k	0.79 k
@ Right End	17.37 k	2.33 k	1.75 k	0.79 k

Deflection

Deflections...	Upward			Downward		
DL + [Bm Wt]	0.0000 in	at	14.0000 ft	-0.1086 in	at	7.0000 ft
DL + LL + [Bm Wt]	0.0000 in	at	14.0000 ft	-0.4331 in	at	7.0000 ft
DL + LL + ST + [Bm Wt]	0.0000 in	at	14.0000 ft	-0.4331 in	at	7.0000 ft

Reactions...	@ Left	@ Right
DL + [Bm Wt]]	0.942 k	0.942 k
DL + LL + [Bm Wt]	1.642 k	1.642 k
DL + LL + ST + [Bm Wt]	1.642 k	1.642 k

Title :
Dsgnr:
Description :

Job #
Date: 9:47AM, 31 MAY 06

Scope :

Description stair

Section Analysis

Evaluate Moment Capacity...	Center	Left End	Right End
X : Neutral Axis	1.430 in	1.430 in	1.430 in
a = beta * Xneutral	1.215 in	1.215 in	1.215 in
Compression in Concrete	37.194 k	37.194 k	37.194 k
Sum [Steel comp. forces]	0.000 k	0.000 k	0.000 k
Tension in Reinforcing	-37.200 k	-37.200 k	-37.200 k
Find Max As for Ductile Failure...			
X-Balanced	3.255 in	3.255 in	3.2551 in
Xmax = Xbal * 0.75	2.441 in	2.441 in	2.441 in
a-max = beta * Xbal	2.767 in	2.767 in	2.767 in
Compression in Concrete	63.499 k	63.499 k	63.499 k
Sum [Steel Comp Forces]	0.000 k	0.000 k	0.000 k
Total Compressive Force	63.499 k	63.499 k	63.499 k
AS Max = Tot Force / Fy	1.058 in2	1.058 in2	1.058 in2
Actual Tension As	0.620 OK	0.000 OK	0.000 OK

Additional Deflection Calcs

Neutral Axis	1.870 in	Mcr	3.35 k-ft
Igross	343.00 in4	Ms:Max DL + LL	5.75 k-ft
Icracked	102.04 in4	R1 = (Ms:DL+LL)/Mcr	0.584
Elastic Modulus	3,122.0 ksi	Ms:Max DL+LL+ST	5.75 k-ft
Fr = 7.5 * f'c^.5	410.792 psi	R2 = (Ms:DL+LL+ST)/Mcr	0.584
Z:Cracking	91.932 k/in	I:eff... Ms(DL+LL)	149.967 in4
		I:eff... Ms(DL+LL+ST)	149.967 in4
Eff. Flange Width	12.00 in		

ACI Factors (per ACI 318-02, applied internally to entered loads)

ACI C-1 & C-2 DL	1.400	ACI C-2 Group Factor	0.750	Add'l "1.4" Factor for Seismic	1.400
ACI C-1 & C-2 LL	1.700	ACI C-3 Dead Load Factor	0.900	Add'l "0.9" Factor for Seismic	0.900
ACI C-1 & C-2 ST	1.700	ACI C-3 Short Term Factor	1.300		
....seismic = ST * :	1.100				

P66of69

Title :
Dsgnr:
Description :

Job #
Date: 11:57AM, 15 NOV 06

Scope :

Code Ref: ACI 318-02, 1997 UBC, 2003 IBC, 2003 NFPA 5000

Rev: 580000
User: KW-0602861, Ver 5.8.0, 1-Dec-2003
(c)1983-2003 ENERCALC Engineering Software

Cantilevered Retaining Wall Design

Description wall between crawl space and deck / WORSTH CASE - RETAINING WITHOUT SLAB.

Criteria

Retained Height	=	4.00 ft
Wall height above soil	=	0.00 ft
Slope Behind Wall	=	0.00 : 1
Height of Soil over Toe	=	8.00 in
Soil Density	=	110.00 pcf
Wind on Stem	=	0.0 psf

Soil Data

Allow Soil Bearing	=	3,000.0 psf
Equivalent Fluid Pressure Method		
Heel Active Pressure	=	35.0
Toe Active Pressure	=	0.0
Passive Pressure	=	250.0
Water height over heel	=	0.0 ft
Footing||Soil Friction	=	0.300
Soil height to ignore for passive pressure	=	0.00 in

Footing Strengths & Dimensions

f'c = 3,000 psi Fy = 60,000 psi

Min. As %	=	0.0014
Toe Width	=	0.17 ft
Heel Width	=	1.67
Total Footing Width	=	1.84
Footing Thickness	=	12.00 in
Key Width	=	0.00 in
Key Depth	=	0.00 in
Key Distance from Toe	=	0.00 ft

Cover @ Top = 3.00 in @ Btm.= 3.00 in

Design Summary

Total Bearing Load	=	1,188 lbs	
...resultant ecc.	=	5.89 in	
Soil Pressure @ Toe	=	1,844 psf	OK
Soil Pressure @ Heel	=	0 psf	OK
Allowable	=	3,000 psf	
Soil Pressure Less Than Allowable			
ACI Factored @ Toe	=	2,317 psf	
ACI Factored @ Heel	=	0 psf	
Footing Shear @ Toe	=	3.1 psi	OK
Footing Shear @ Heel	=	10.2 psi	OK
Allowable	=	93.1 psi	

Wall Stability Ratios

Overturning	=	1.70 OK
Sliding	=	1.61 OK

Sliding Calcs (Vertical Component Used)

Lateral Sliding Force	=	437.5 lbs	
less 100% Passive Force	= -	347.2 lbs	
less 100% Friction Force	= -	356.4 lbs	
Added Force Req'd	=	0.0 lbs	OK
....for 1.5 : 1 Stability	=	0.0 lbs	OK

Footing Design Results

		Toe	Heel
Factored Pressure	=	2,317	0 psf
Mu' : Upward	=	120	0 ft-#
Mu' : Downward	=	18	0 ft-#
Mu: Design	=	102	635 ft-#
Actual 1-Way Shear	=	3.09	10.16 psi
Allow 1-Way Shear	=	93.11	93.11 psi
Toe Reinforcing	=	None Spec'd	
Heel Reinforcing	=	None Spec'd	
Key Reinforcing	=	None Spec'd	

Stem Construction

Top Stem

			Stem OK
Design height		ft =	0.00
Wall Material Above "Ht"		=	Masonry
Thickness		=	8.00
Rebar Size		=	# 5
Rebar Spacing		=	24.00
Rebar Placed at		=	Center
Design Data			
fb/FB + fa/Fa		=	**0.356**
Total Force @ Section	lbs	=	280.0
Moment....Actual	ft-#	=	373.3
Moment.....Allowable		=	1,047.4
Shear.....Actual	psi	=	6.8
Shear.....Allowable	psi	=	38.7
Bar Develop ABOVE Ht.	in	=	30.00
Bar Lap/Hook BELOW Ht.	in	=	6.00
Wall Weight		=	84.0
Rebar Depth 'd'	in	=	3.81
Masonry Data			
f'm	psi	=	1,500
Fs	psi	=	24,000
Solid Grouting		=	Yes
Special Inspection		=	Yes
Modular Ratio 'n'		=	25.78
Short Term Factor		=	1.000
Equiv. Solid Thick.	in	=	7.60
Masonry Block Type = Normal Weight			
Concrete Data			
f'c	psi	=	
Fy	psi	=	

Other Acceptable Sizes & Spacings

Toe: Not req'd, Mu < S * Fr
Heel: Not req'd, Mu < S * Fr
Key: No key defined

Title :
Dsgnr:
Description :
Scope :

Job #
Date: 11:57AM, 15 NOV 06

Code Ref: ACI 318-02, 1997 UBC, 2003 IBC, 2003 NFPA 5000

Rev: 580000
User: KW-0602661, Ver 5.8.0, 1-Dec-2003
(c)1983-2003 ENERCALC Engineering Software

Cantilevered Retaining Wall Design

Description wall between crawl space and deck

Summary of Overturning & Resisting Forces & Moments

Item		.....OVERTURNING..... Force lbs	Distance ft	Moment ft-#		.....RESISTING..... Force lbs	Distance ft	Moment ft-#
Heel Active Pressure	=	437.5	1.67	729.2	Soil Over Heel	= 441.5	1.34	590.8
Toe Active Pressure	=				Sloped Soil Over Heel	=		
Surcharge Over Toe	=				Surcharge Over Heel	=		
Adjacent Footing Load	=				Adjacent Footing Load	=		
Added Lateral Load	=				Axial Dead Load on Stem	=	0.00	
Load @ Stem Above Soil	=				Soil Over Toe	= 12.5	0.09	1.1
SeismicLoad	=				Surcharge Over Toe	=		
					Stem Weight(s)	= 336.0	0.50	169.1
Total	=	437.5	**O.T.M.** =	729.2	Earth @ Stem Transitions	=		
					Footing Weight	= 276.0	0.92	253.9
					Key Weight	=		
					Vert. Component	= 121.9	1.84	224.4
					Total	= 1,187.9 lbs	**R.M.**=	1,239.3

Resisting/Overturning Ratio = **1.70**

Vertical Loads used for Soil Pressure = 1,187.9 lbs

Vertical component of active pressure used for soil pressure

P68 of 69

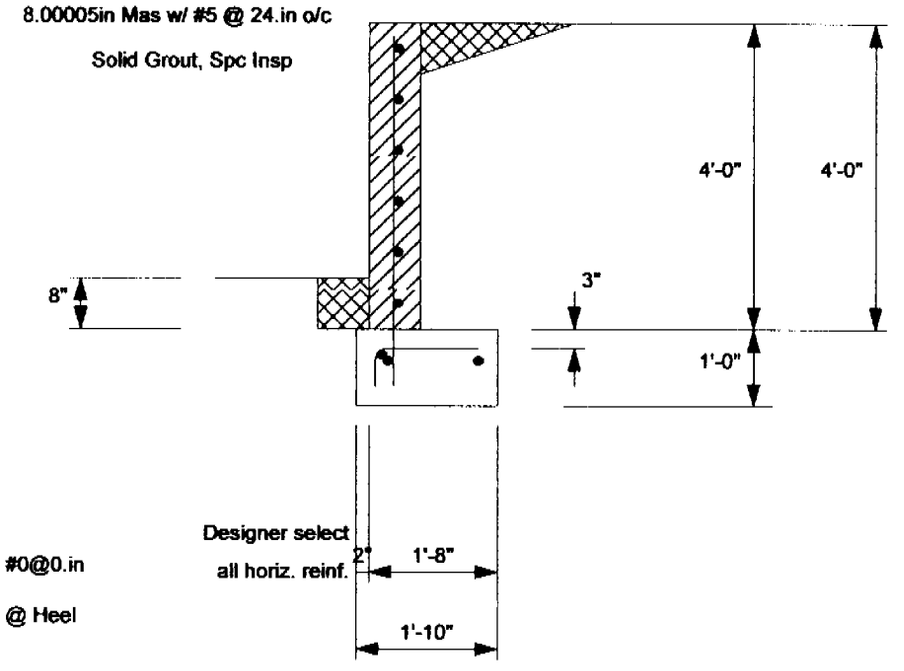
8.00005in Mas w/ #5 @ 24.in o/c
Solid Grout, Spc Insp
4'-0"
4'-0"
8"
3"
1'-0"
Designer select
all horiz. reinf.
2"
1'-8"
1'-10"
#0@0.in
@ Heel

P69 of 69

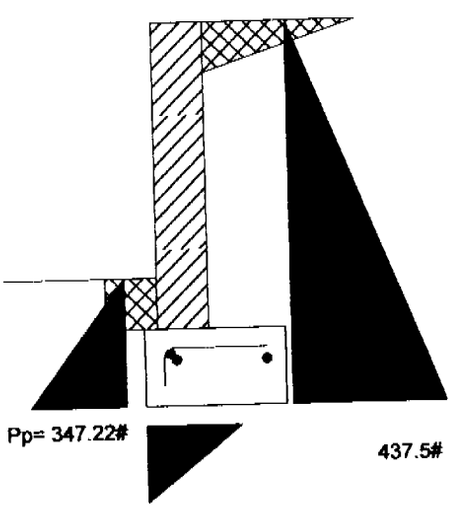

P61of69

Title :
Dsgnr:
Description :

Job #
Date: 9:34AM, 31 MAY 06

Scope :

Masonry Flush Wall Pilaster/Column

Description 3ft opening

General Information

Code Ref: ACI 530-02

Wall Height	10.000 ft	Block Type	Medium Wt	f'm	1,500.0 psi
Thickness	8 in	Bearing Plate Width	16.000 in	Fs	24,000.0 psi
Rebar Size	5	Column Width	16.000 in	Em = f'm *	900.0
Rebar Spacing	8.000 in			Special Inspection	
Rebar Location	Edge	Column Width used	16.000 in	Solid Grouted	
				E	1350,000.0 psi
Seismic Factor	0.000	Load Duration Factor	1.330	n	21.481
Seismic Zone	0	Wall Wt Multiplier	1.000		

Applied Loads

Uniform Loads		Girder Load	
Dead Load	0.00 #/ft	Dead Load	20,800.00 lbs
Live Load	0.00 #/ft	Live Load	5,200.00 lbs
...eccentricity	0.000 in	...eccentricity	0.000 in
...load Type	Roof	...load Type	Floor
Wind Load	130.00 psf		

Design Values

Allow Brg. Stress	390.00 psi	Rebar Area			0.620 in2
Allow Axial Stress	352.08 psi	Rebar Depth			5.250 in
Reduction Factor	0.85	Wall Weight			78.000 psf
Allow Masonry Bending	495.00 psi	np	0.1586	k	0.4265
		j	0.8578	2/kj	5.4669
Max. Allow Moment w/o Axial Load	3,327.55 ft-#	Radius of Gyration			2.205 in
Max. Axial Load w/o Moment	42,813.02 lbs	Moment of Inertia			443.320 in4

Load Combinations & Stress Details

	Moment	Axial			
Top of Wall	ft-#	lbs	Steel	Masonry	Axial Stress
DL + LL	0.00	26,000.0	0.00	0.00	213.82
Btwn. Base & Top of Wall					
DL + LL + Wind	2,166.66	26,520.0	9,311.36	322.31	218.09
DL + LL + Seismic	0.00	26,520.0	0.00	0.00	218.09
Required Bearing Area	66.67 in2		Req'd Bearing Length		4.17 in

Summary

Pilaster Design OK

10.00ft high, 8.00in thick w/ #5 @ 8.00in o.c. at edge, Special Inspection, Solid Grouted

Max. Bending + Axial Comp. Stress	540.40	psi
Allowable	658.35	OK
Max. Axial Only Compressive Stress	213.82	psi
Allowable	352.08	OK
Max Steel Bending Stress	9,311.36	psi
Allowable	31,920.00	OK

Summary of Loads & Moments

			@ TOW	@ Mid-Ht
Girder + Uniform Dead Loads	20,800.00 lbs			
Girder + Uniform Live Loads	5,200.00 lbs	Girder DL Moments	0.0	0.0 ft-#
Wall Weight @ mid-height	520.00 lbs	Girder LL Moments	0.0	0.0 ft-#
DL Moments @ mid-height	0.00 ft-#	Wind Moment @ Mid-Ht		2,166.66 ft-#
LL Moments @ mid-height	0.00 ft-#	Seismic Moment @ Mid-Ht		0.00 ft-#

SAM LYUBKIN, P.E.
CONSULTING ENGINEER, P.E. 34306 FL

Forum Building
2632 Hollywood Boulevard, Suite 103
Hollywood, Florida 33020
(954) 922-8845

2-3-01

BLDG. FOR 1529 JEFFERSON AVE., M.B.

RESPOND TO BLDG. DEPARTMENT COMMENTS, DATED 12-27-01

TABLE OF CONTENTS

STRUCTURAL 12/27/0

5.1 Comment was not addressed. Please provide lateral analysis under wind loads as per ASCE 7-02, not just the computation of loads. (P2÷6) - NEW CALCS

7.1 Comment was not addressed. There is still conflict between sections and ground floor framing plan. (CORRECTED: COMPLETION NOTES VOID).

8. Indicate top of slab elevation at all floors. Also indicate top of grade beam elevation on S-1.

9. Individual piles along grade beams are not properly braced in the direction perpendicular to the grade beam if elevation difference between ground floor slab and grade beams is too big.

10. Provide detail for steel column base plate at ground floor. 4 anchor bolts do not fit into an 8" wide section.

11. Also, section 5/S-3 implies 8 anchor bolts at the location, which will produce congestion and reduce the length of the bolts. Revise detail.

8) T.O.S & TOP OF "GB" - ADDED

9) ADDED STRAP BEAMS (S-1)

10) COL'N UNDER STL. COLUMN BASE PLATE CHANGED TO 14"x14" (BASE PLATE CHANGED); DETAIL ADDED ON S-1

11) TOP PLATE FOR BOTTOM STEEL COLUMN INCLUDE BASE PLATE FOR STEEL COL. ABOVE: DETAIL ADDED ON S-3

* FLOOR VENTS COORDINATED W/ ARCH'T.

Note #5: Check piles, grade beams and Masonry Walls as MWFRS.

a). Check Short Walls (Worsth case)

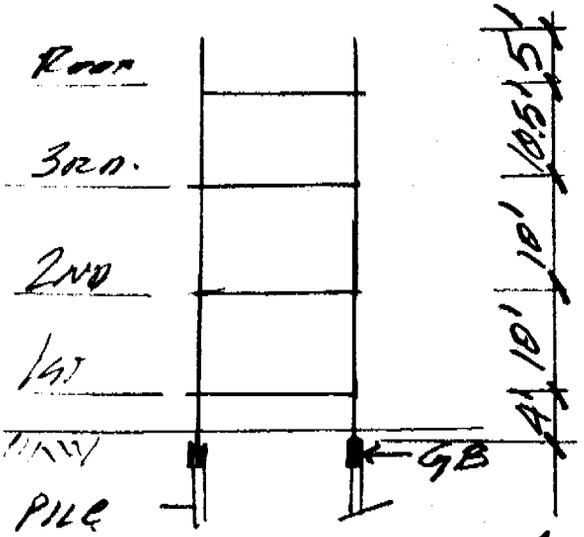

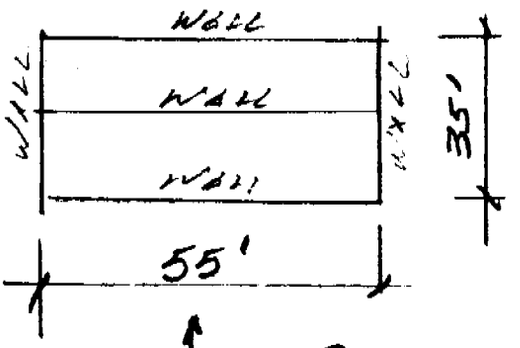

Design Wind Direction.

Main Wind, = (32.11 + 26.02) + ~~[illegible]~~
(P4 of 69)

* Check 1st. to 2nd. Floor Short Wall (Walls above the same w/ similar reinforcing).

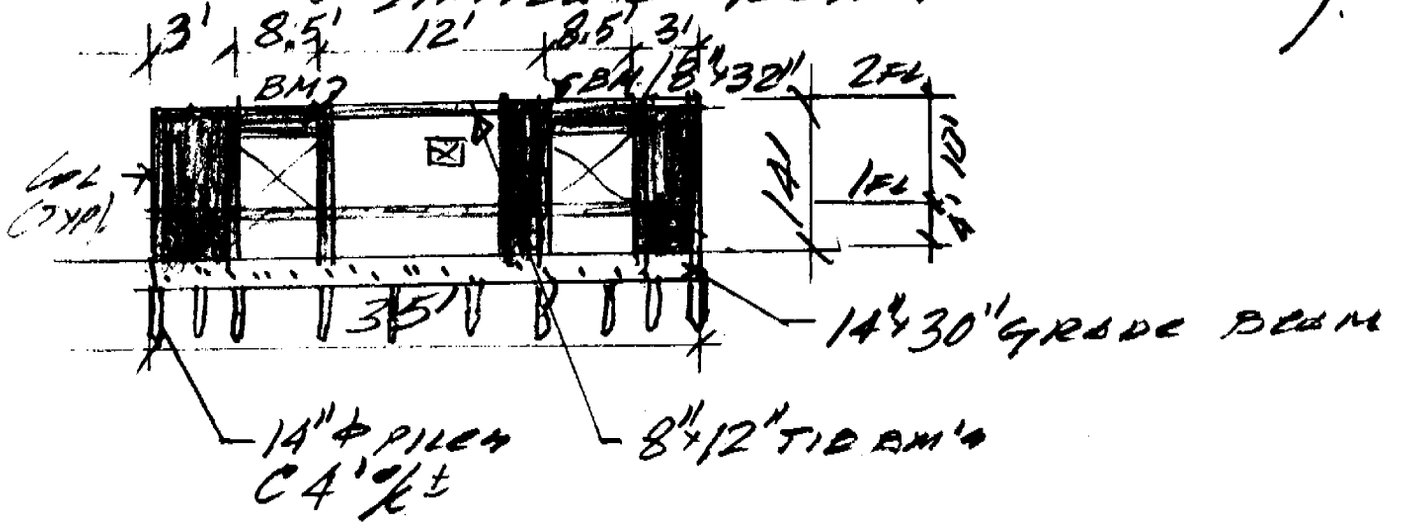

TOTAL $P = 60^{\#} \times (5+10.5+10+5) \times 55'/2 + \ldots$

$\approx 51\text{ KIP} \times 1.3 \approx \underline{66.5\text{ K}}$

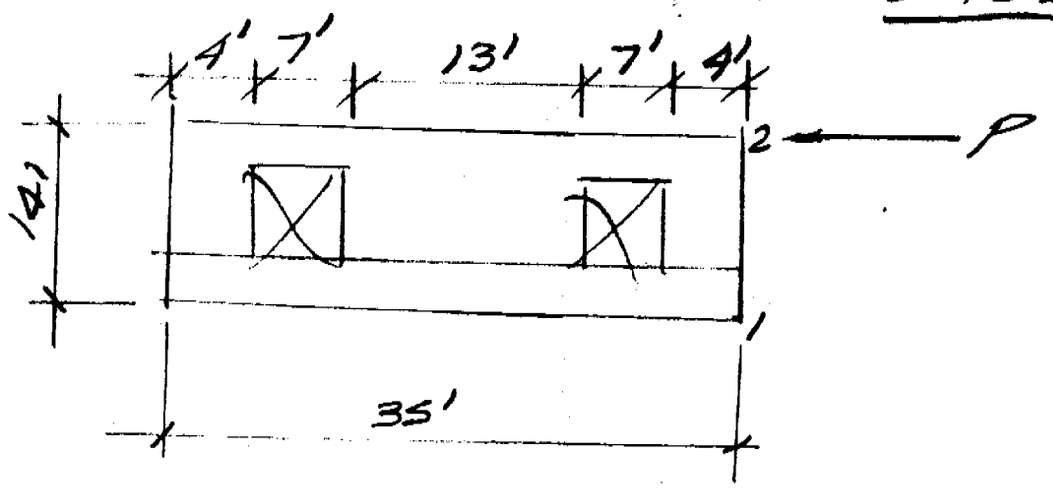

CONCLUSION: 4' PIERS CHANGE TO SOLID CONCRETE.
13' PIER - CHANGE COL'S #1 TO COL'S #2 ($A_s = 2.64\text{ in}^2$ > 7 THAN REQ'D 2.42 in^2) - OK

C. **Pier Data.**- One line of data is required for each pier. A maximum of six piers can be used.

PIER - A sequential identification integer for each pier.

FIXBOT - The fixity condition at the pier bottom. Specify:
1 = pinned condition
2 = fixed condition

FIXTOP - The fixity condition at the pier top. If the bottom fixity condition was specified as pinned the default for this entry will be fixed. No pinned-pinned condition is allowed. Specify:
1 = pinned condition
2 = fixed condition

HEIGHT - The pier height, (ft).

LENGTH - The pier length, (ft).

THICK - The pier thickness, (in).

J - The depth multiplier. This value will be used to determine "d" or depth of reinforcement from the compression face.
(Default = 0.9)

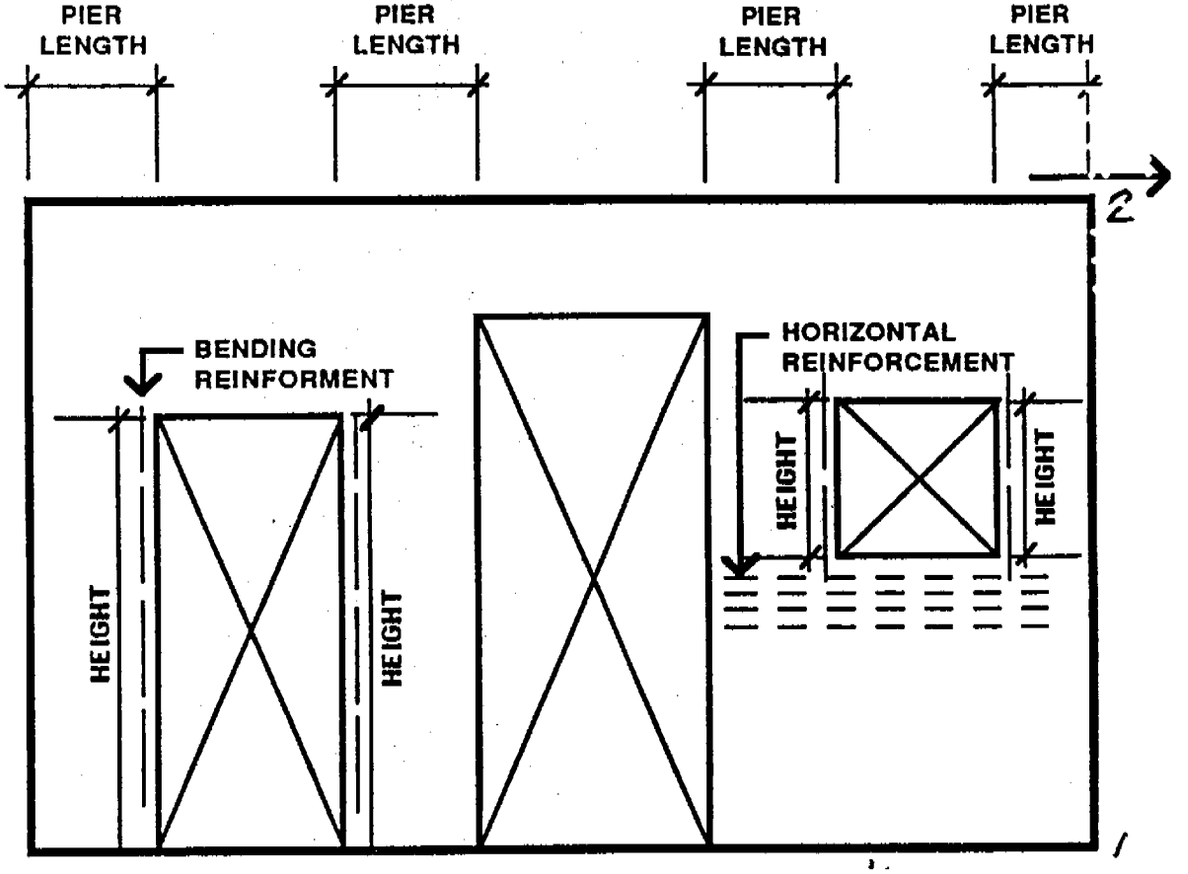

Title :
Dsgnr:
Description :

Job #
Date: 11:14AM, 3 AUG 06

Scope :

Rev 5B0000
User KW-0602861, Ver 5.8.0, 1-Dec-2003
(c)1983-2003 ENERCALC Engineering Software

Masonry Pier Analysis & Design

Description short wall

General Information

Code Ref: ACI 530-02, 1997 UBC, 2003 IBC, 2003 NFPA 5000

Total Lateral Force	66.50 k	Moduli: Em = f'm *	900.00
Seismic Zone	0	Moduli: Ev = Em *	0.40
Load Duration Factor	1.33		

Shear Pier Data

	Pier #1	Pier #2	Pier #3
Pier Height	14.00 ft	14.00 ft	14.00 ft
Pier Length	4.00 ft	13.00 ft	4.00 ft
Wall Thickness	8 in	8 in	8 in
"j" : Depth Mult.	0.90	0.90	0.90
Pier Fixity	Pin-Fix	Pin-Fix	Pin-Fix
f'm	1,500 psi	1,500 psi	1,500 psi
Fs	24,000 psi	24,000 psi	24,000 psi
Sp Insp	Yes	Yes	Yes
Grout Spacing	16 in	16 in	16 in

Analysis Data

	Pier #1	Pier #2	Pier #3	
Height/Length	3.5000	1.0769	3.5000	
(H/L)^3	42.8750	1.2490	42.8750	
Rel. Defl	16.8519	0.7617	16.8519	
Sum Rigidity	1,431.48			
Rigidity = .001/Defl	59.341	1,312.803	59.341	
% Force to Pier	0.04	0.92	0.04	
Shear to Pier	2.757 k	60.987 k	2.757 k	
Relative Defl * 10^5	0.00 in	0.00 in	0.00 in	
M / (V*Depth)	3.889	1.197	3.889	
Em	1350,000.0	1350,000.0	1350,000.0	psi
Ev	540,000.0	540,000.0	540,000.0	psi

Summary

	Pier #1	Pier #2	Pier #3
Shear Reinforcing...			
fv=V/(12*est*jd)	11.00 psi	74.89 psi	11.00 psi
Fv: w/o Reinf.	46.55 psi	46.55 psi	46.55 psi
Fv: w/ Reinf.	77.27 psi	77.27 psi	77.27 psi
Horiz. Shear Av Req'd	Not Req'd in^2/ft	0.147 in^2/ft	Not Req'd in^2/ft
Bending Reinforcing...			
Moment @ End	38.59 k-ft	853.81 k-ft	38.59 k-ft
"d" to tension As	3.60 ft	11.70 ft	3.60 ft
Bending As Req'd	0.34 in2	2.42 in2	0.34 in2

b). Check grade beams & short walls (worst case).

- Added Moment = 66.5 x 14 / 35 x .67 =

= 39.7 k-ft.

Total Moment:

W^{ult} = (.065 x 40 + .5 + .5) x 1.55 x 6 k-ft.

M^{ult} = 6 x 5²/10 + (39.7) = 55 k-ft.

$A_s^{req} = \frac{55}{4 \times (24-6)} = .77 in^2 < (3\#6 = 1.32 in^2)$ - ok

c) Pile Loading:

Gravity Load = 6/1.55 x 5 = 20 k.

Lateral = 39.7/2 min = 20 k

Σ = 40 k < 70 k - ok

- Shear: 20 k < .1 x 18" x 14' = 25.2 k, but increase depth to 30" (add 2#5).

Inc Certificate

LEGEND:

M	MONUMENT LINE
℄	CENTERLINE
R/W	RIGHT-OF-WAY
CBS	CONCRETE BLOCK & STUCCO
CLF	CHAIN LINK FENCE
Δ	CENTRAL ANGLE
R	RADIUS
A	ARC LENGTH
C	CHORD LENGTH
CHB	CHORD BEARING
MH	MANHOLE
——□——	WOOD FENCE
——x——	CHAIN LINK FENCE
WM	WATER METER
OW	OVERHEAD WIRES
WUP	WOOD UTILITY POLE
CONC.	CONCRETE
N&D	NAIL AND DISK
4.62	DENOTES EXISTING ELEVATION
A/C	AIR CONDITIONING APPURTENANCE
UP	UTILITY POLE
P. B.	PLAT BOOK
PG.	PAGE
⋰⋰⋰	CONCRETE
N&D	NAIL AND DISK
PM	PARKING METER
TSP	TRAFFIC SIGNAL POLE
MLP	METAL LIGHT POLE
CLP	CONCRETE LIGHT POLE
P.	PLANTER
FFE	FINISHED FLOOR ELEVATION
F.	FOUNTAIN
VB	VAULT BOX
GM	GAS METER
TS	TRANSFORMER SLAB
S.	STANDPIPE
BFPV	BACKFLOW PREVENTER VALVE
(M)	MEASURED
SP	SABAL PALM
BO	BLACK OLIVE
RP	ROYAL PALM

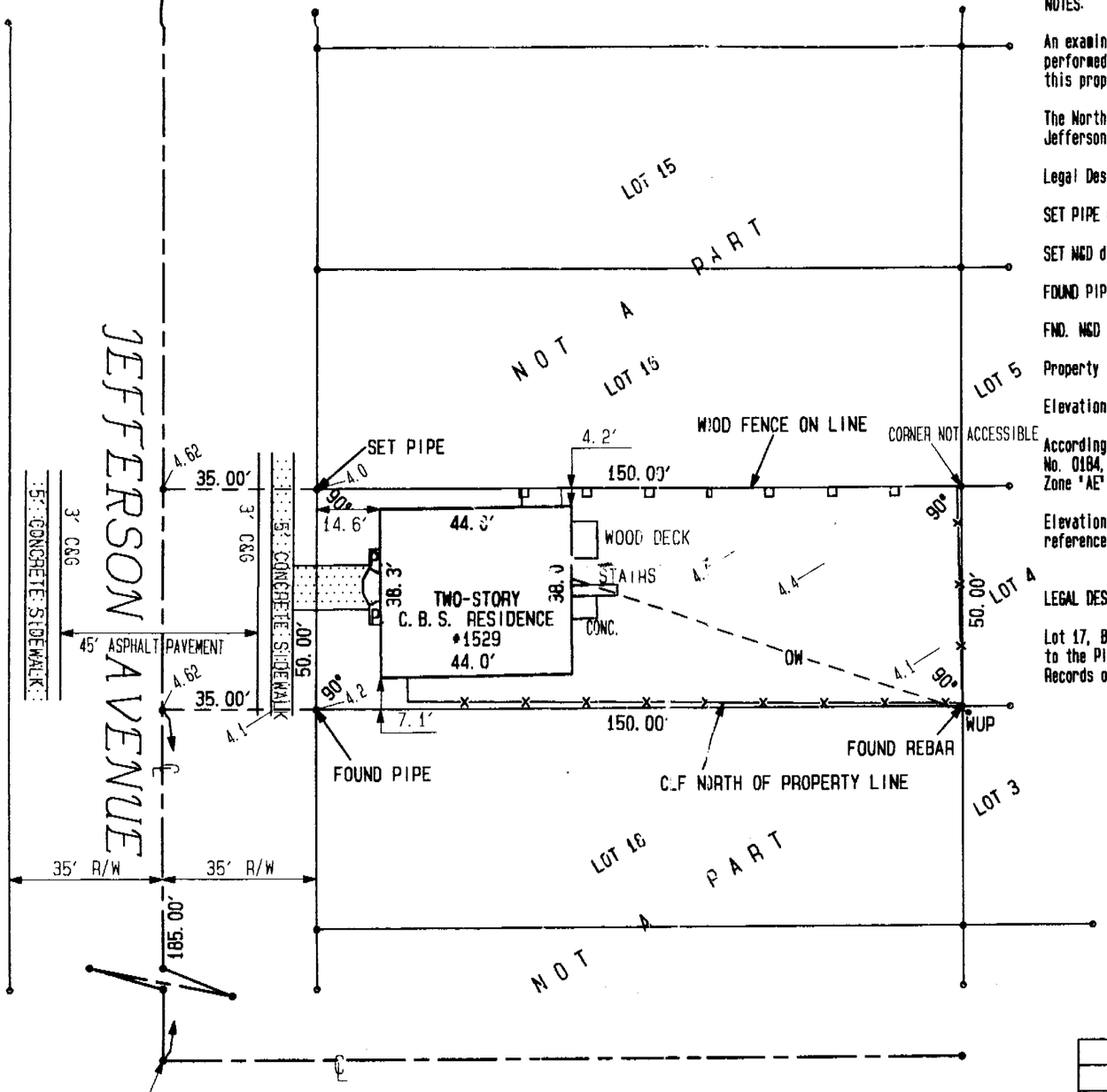

NOTES:

An examination of the Abstract of Title will have to be performed to determine the recorded instruments, if any, affecting this property.

The North arrow shown hereon is based upon the centerline of Jefferson Avenue, assumed bearing = due North.

Legal Description supplied by Client and is not warranted.

SET PIPE denotes set 1/2" iron pipe and cap stamped "LB-1678".

SET N&D denotes set nail and disk stamped "LB-1678".

FOUND PIPE denotes found 1/2" iron pipe with no cap/cap illegible.

FND. N&D denotes found nail and disk.

Property contains ±7,500 square feet.

Elevations are based upon National Geodetic Vertical Datum.

According to the National Flood Program's Flood Rate Map No. 12025C, Panel No. 0184, Suffix "J", Community Number 120651, this property lies in Flood Zone "AE", Elevation = 8 feet.

Elevations are based upon National Geodetic Vertical Datum and are referenced to Miami-Dade County Benchmark "D-149", elevation=4.27 feet.

LEGAL DESCRIPTION:

Lot 17, Block 62, of "LINCOLN SUBDIVISION", according to the Plat thereof, as recorded in Plat Book 9, Page 69, of the Public Records of Miami-Dade County, Florida.

SCALE 1"=30'

No.	DATE	REVISION DESCRIPTION	BY	CHK.	APV.

PROJECT# 4476	DATE 8-23-2006
DRAWN A. C.	CHECKED
FIELD BOOK; 303	PAGES 56
CADD FILE 4476	SCALE 1"=30'

SKETCH OF SURVEY

FOR

3 Design, Inc.

CAMPANILE & ASSOCIATES, INC.
ENGINEERS PLANNERS SURVEYORS
6420 S.W. 147th STREET
CORAL GABLES, FLORIDA 33158
(305) 971-1988
(305) 971-1989 (FAX)

CAMPANILE & ASSOCIATES, INC.

Louis R. Campanile

BY: LOUIS R. CAMPANILE
PROFESSIONAL SURVEYOR AND MAPPER No. 1224
STATE OF FLORIDA

UNLESS IT BEARS THE SIGNATURE AND THE ORIGINAL RAISED SEAL OF A FLORIDA LICENSED SURVEYOR AND MAPPER, THIS DRAWING, SKETCH, PLAT OR MAP IS FOR INFORMATIONAL PURPOSES ONLY AND IS NOT VALID.

2007-0702-1449-5632

TRK# 781 (MH) 7/6/07

JEFFERSON

A CONDOMINIUM

1529 JEFFERSON AVE.

DEPT. OF ENVIRONMENTAL RESOURCES MANAGEMENT
OFFICE OF PLAN REVIEW SERVICES
PLAN PROCESSING NO. D

REVIEW TYPE	APPROVED	DATE	DISAPPROVED	DATE
ENVIRONMENT	WJS	9/19/07	WJS	9/19/07
FLOOD PLAIN				
INDUSTRIAL ENG.				
ASBESTOS				
PAVING DRAINAGE	M.H	7/11/05		
STORAGE TANK				
WASTE FOOD				
PRETREATMENT				
WATER SUPPLY				
WASTEWATER				
AIR				
AGRICULTURAL				
AIRPORT				
UPLAND & FWR.			NR	7/5/07
OTHER				

FINAL DERM APPROVAL
SIGNATURE 9/19/07 DATE
*PERMIT IS NOT VALID UNTIL FINAL DEPARTMENTAL APPROVAL IS ISSUED BY THE OFFICE OF PLAN REVIEW SERVICES

Derm Number: 2007-0702-1449-5632
Contact Name: MS LISA VAZQUEZ
Contact Phone: (305)318-3310
Folio: 02-3234-002-1350
Project Name: 1529 JEFFERSON LLC-6 UNIT
Date Received: 07/02/2007
Reviewer Name: WILMA SYLVESTER

ROAD N/A FIRE SCHOOL
IMPACT FEE PAID
SEP 18 2007
1529 Jefferson Ave
MIAMI-DADE COUNTY
APPROVED



B0605/08

OFFICE COPY
CITY OF MIAMI BEACH
APPROVED FOR PERMIT BY THE FOLLOWING:
BUILDING: 3/6/07
ZONING:
DRB/HPB: JUN 1 2 2007
CONCURRENCY: 10/3/07
PLUMBING:
ELECTRICAL: 5/25/7
MECHANICAL:
FIRE PREVENTION: 10/5/7
ENGINEERING: 10/05/07
PUBLIC WORKS: 10/03/07
STRUCTURAL: 10/3/07
ACCESSIBILITY: 10/02/07
LEVAPIER:

48 HOURS PRIOR TO EXCAVATING
CONTRACTOR SHALL CALL FOR LOCATION
OF UNDERGROUND UTILITIES
SUNSHINE ONE-CALL 1-800-432-4770
CITY OF MIAMI BEACH 305-673-7080

3D DESIGN, INC.
ANTHONY LEON
AR0016752
ARCHITECTURE
4300 BISCAYNE BLVD. SUITE#G04 MIAMI, FL 33137 T.305.438.9377 F.305.438.9378

Phone 305-[illegible] 305-573-7028

THIS PLAN RE[illegible] APPROVAL FOR OBTAINING [illegible]LY.

All construction and or u[illegible] of-way and/or easements, requires a sep[illegible] permit prior to start [illegible]

Permit Requirements: Proof of existing [illegible] swale area condition (pictures) and or posting of sidewalk [illegible] bonds
(Public Works Inspection of the right-of-way will be required prior to final sign-off on the C.C. / C.O., or the release of bonds.)

Approved/Reviewed By: [illegible] Date: 10/03/07

JEFFERSON

A CONDOMINIUM

1529 JEFFERSON AVE.



3DESIGN, INC.

ANTHONY LEON

AR0016752

ARCHITECTURE

4300 BISCAYNE BLVD. SUITE#604 MIAMI, FL 33137 T.305.438.9377 F.305.438.9378

OLD

OFFICE COPY

CITY OF MIA

APPROVED F

THE FOL

BUILDING:
ZONING:
DRB/HPB:
CONCURRENC
PLUMBING:
ELECTRICAL:
MECHANICAL:
FIRE PREVENT
ENGINEERIN
PUBLIC WO
STRUCTUR
ACCESSI
ELEVATO

GENERAL NOTES

1. THESE DOCUMENTS, AS INSTRUMENTS OF SERVICE, ARE THE PROPERTY OF 3DESIGN, Inc. AND MAY NOT BE USED OR REPRODUCED IN ANY MANNER WITHOUT EXPRESSED WRITTEN CONSENT
2. IT IS NOT THE INTENT OF THESE PLANS TO SHOW EVERY MINOR DETAIL OF CONSTRUCTION. THE GENERAL CONTRACTOR IS EXPECTED TO FURNISH AND INSTALL ALL ITEMS REQUIRED TO COMPLETE ALL BUILDING SYSTEMS AND PROVIDE ALL NECESSARY APPURTENANCES FOR EQUIPMENT TO BE PLACED IN PROPER WORKING ORDER WITH QUALITY CRAFTMANSHIP WITHOUT INCREASING THE CONTRACT SUM OR CONTRACT COMPLETION DATE.
3. ALL WORK DESCRIBED BY THSE DOCUMENTS MUST BE PERFORMED BY CONSTRUCTION PROFESSIONALS LICENCED & INSURED IN THE STATE OF FLORIDA (F.B.C. REQUIRED). ALL WORK SHALL BE PERFORMED IN ACCORDANCE W/ THE NATIONAL ELECTRIC CODE AND F.B.C.
4. THE GENERAL CONTRACTOR SHALL VERIFY ALL CONDITIONS AND DIMENSIONS AT THE JOB SITE PRIOR TO COMMENCING THE WORK. IF THERE ANY DISCREPANCIES BETWEEN THESE DRAWINGS AND FIELD CONDITIONS, THE CONTRACTOR SHALL NOTIFY THE ARCHITECT PRIOR TO COMMENCING THE WORK FOR CLEAR INSTRUCTION.
5. DO NOT SCALE THE DRAWINGS. REFER TO FIGURED DIMENSIONS.
6. THE CONTRACTOR IS TO ACQUIRE ALL REQUIRED PERMITS FOR THE DEMOLITION, CONSTRUCTION, FINISHING, AND OCCUPANCY OF THE PROJECT. ALL WORK SHALL BE PERFORMED IN ACCORDANCE WITH THE F.B.C., LATEST EDITION.
7. ALL WORK DONE UNDER THE SUPERVISION OF THE GENERAL CONTRACTOR SHALL BE IN A NEAT AND WORKMAN-LIKE MANNER IN ACCORDANCE WITH FEDERAL, STATE, AND LOCAL GOVERNING AGENCIES HAVING JURISDICTION.
8. THE GENERAL CONTRACTOR IS TO PROVIDE, LOCATE AND BUILD INTO THE WORK ALL SUPPLEMENTARY MATERIALS INSERTS, ANCHORS, ANGLES, PLATES, OPENINGS, SLEEVES, HANGERS, SLAB DEPRESSIONS, PITCHES, ETC.) AS REQUIRED TO PROPERLY INSTALL, SUPPORT, BRACE, AND SHORE ALL BUILDING COMPONENTS WITHIN THE SCOPE OF THE PROJECT.
9. THE GENERAL CONTRACTOR SHALL REPAIR ALL DAMAGES TO THE EXISTING BUILDING DURING CONSTRUCTION RESULTING FROM SUCH LACK OF CARE AND DUE DILIGENCE AND MAY NOT CLAIM MONETARY DAMAGES OR TIME DELAYS AGAINST THE CONTRACT SUM OR CONTRACT COMPLETION DATE.
10. THE GENERAL CONTRACTOR SHALL COORDINATE AND SCHEDULE THE WORK OF ALL TRADES TO INSURE THAT THE PROJECT IS COMPLETED BY THE CONTRACT COMPLETION DATE.
11. PRIOR TO COMMENCING WORK, THE GENERAL CONTRACTOR SHALL SITE VERIFY THE LOCATION OF ALL EQUIPMENT TO BE REMOVED/RELOCATED. REMOVALS SHALL BE COORDINATED WITH THE OWNER. IF SO DIRECTED, THE G.C. MAY INCLUDE ANY ADDITIONAL COSTS TO THE BID.
12. THE GENERAL CONTRACTOR SHALL PROVIDE AN ONSITE DUMPSTER IN A LOCATION COORDINATED WITH THE OWNER FOR THE DISPOSAL OF REMOVED MATERIAL/CONSTRUCTION DEBRIS. THE DUMPSTER SHALL BE EMPTIED AT APPROPRIATE INTERVALS TO PREVENT OVERFLOW AND UNSIGHTLY CONDITIONS.
13. IT IS THE INTENT OF 3DESIGN, Inc. THAT THIS WORK BE IN CONFORMANCE WITH ALL REQUIREMENTS OF THE BUILDING AUTHORITIES HAVING JURISDICTION OVER THIS TYPE OF CONSTRUCTION AND OCCUPANCY. THE G.C. SHALL NOTIFY THE ARCHITECT/ENGINEERS OF RECORD IMMEDIATELY IF ANY DISCREPANCIES ARE ENCOUNTERED BETWEEN THE DRAWINGS AND THESE REQUIREMENTS. ANY DISCREPANCIES WILL BE RESOLVED BY ARCHITECT / ENGINEER OF RECORD PRIOR TO PROCEEDING WITH THE WORK.
14. THE GENERAL CONTRACTOR SHALL PROVIDE THE ARCHITECT WITH RED-LINE AS-BUILT DRAWINGS FOR ALL FIELD CHANGES/ADDITIONS TO THE WORK INCLUDED IN THE WORK.
15. THE GENERAL CONTRACTOR SHALL PROVIDE AN ITEMIZED COST BREAKDOWN OF ALL ITEMS AND PHASES OF CONSTRUCTION AT THE TIME OF BIDDING.
16. 3DESIGN, Inc. IS NOT RESPONSIBLE FOR CONSTRUCTION MEANS, METHODS, SEQUENCES, PROCEDURES, PRECAUTIONS, OR PROGRAMS RELATED TO THIS PROJECT'S CONSTRUCTION.
17. ALL WORK IS TO BE PLUM, LINE, SQUARE, AND ADEQUATELY SUPPORTED. FILL ALL VOIDS BETWEEN COMPONENTS. ALL ITEMS THAT DO NOT MEET 3DESIGN, Inc. SATISFACTION AS TO GOOD TRADE PRACTICES AND QUALITY CRAFTMANSHIP WILL BE REDONE AT THE G.C.'S EXPENSE.
18. THE GENERAL CONTRACTOR IS TO MAINTAIN A SAFE SITE, CLEAR OF DEBRIS AT ALL TIMES.
19. THE GENERAL CONTRACTOR AND ALL SUBCONTRACTORS ARE TO GUARANTEE THEIR WORK FOR A MINIMUM PERIOD OF ONE YEAR IN WRITING SUBMITTED WITH THE BID.
20. ALL DETAILS AND SECTIONS SHOWN ON THESE DRAWINGS ARE INTENDED TO BE TYPICAL AND SHALL BE CONSTRUTED TO APPLY TO ANY SIMILAR SITUATION ELSEWHERE IN THE WORK EXCEPT WHERE A DIFFERENT DETAIL IS SHOWN. IT IS THE G.C.'S RESPONSIBILITY TO FORSEE ADDITIONAL CONDITIONS PRIOR TO COMMENCING THE WORK AND NOTIFY THE ARCHITECT IMMEDIATELY.
21. ALL ASSEMBLIES REFERRED TO AS FIRE-RATED SHALL BE A MINIMUM OF ONE HOUR UNLESS OTHERWISE INDICATED. ALL PENETRATIONS THROUGH ANY RATED ASSEMBLY SHALL BE PROVIDED W/ APPROVED PENETRATION RATED DEVICES.
22. THE GENERAL CONTRACTOR SHALL PROVIDE CUSTOM AND MULTI-COLOR PAINT SELECTIONS FOR OWNER'S APPROVAL.
23. ALL HARDWARE, LIGHTING & BATHROOM FIXTURES AND MISC. SPECIFICATIONS NOT SPECIFICALLY CALLED OUT ON THE DRAWINGS SHALL BE PROVIDED BY THE OWNER.
24. THE GENERAL CONTRACTOR SHALL PROVIDE SHOP DRAWINGS FOR TRUSSES, STORM SHUTTERS, REINFORCING STEEL, WINDOWS, DOORS, CAST CONCRETE, ORNAMENTAL IRON, STEEL CONNECTORS, ORNAMENTAL WOOD, ETC. TO THE ARCHITECT FOR REVIEW PRIOR TO COMMENCING THE WORK.
25. THE GENERAL CONTRACTOR SHALL PROVIDE A TELEPHONE AND TELEPHONE LINE AT THE JOB SITE. THE G.C. IS RESPONSIBLE FOR IT'S USE.

BURGLARY/SECURITY NOTES

1. ALL LOCKS ON EXTERIOR DOORS AND DOORS CONNECTING GARAGE AREAS SHALL BE CAPABLE OF RESISTING A FORCE OF 300 POUNDS APPLIED IN ANY MOVABLE DIRECTION AND IN ACCORDANCE WITH RESISTANCE STANDARDS SET FORTH IN 3601.2 (F.B.C.)

2. ALL SINGLE EXTERIOR SWING DOORS SHALL HAVE A LOCK TO BE KEY OPERATED FROM EXTERIOR WITH A MINIMUM OF 6000 POSSIBLE KEY CHANGES OR LOCKING AUXILIARY SINGLE DEAD BOLT (MIN. 1 INCH THROW) WITH HARDENED BOLT INSERTS.

3. THE ACTIVE LEAF OF PAIRS OF EXTERIOR SWING DOORS SHALL HAVE SAME LOCKS AS REQUIRED FOR SINGLE EXTERIOR SWING DOORS. THE INACTIVE LEAF OF THESE PAIRS OF DOORS SHALL HAVE MULTIPLE POINT LOCKS WITH 5/8 INCH MINIMUM THROW BOLTS WITH INSERTS.

4. SLIDING GLASS DOORS SHALL BE PROVIDED WITH SLIDING DOOR DEAD BOLTS OR A BOLT OR PIN NOT REMOVABLE OR OPERABLE FROM EXTERIOR, AT THE JAMB, HEAD, SILL OR AT MEETING MULLIONS. THESE DOORS SHALL BE REINFORCED IN THE STRIKE AND LOCK AREA TO MAINTAIN BOLT STRENGTH EFFECTIVENESS, IF NECESSARY, AND SUCH DOORS SHALL HAVE NO SCREWS REMOVABLE FROM OUTSIDE WHICH WOULD FACILITATE READY ENTRY FROM OUTSIDE.

5. JAMBS SHALL BE PROVIDED WITH APPROVED REINFORCED STRIKES INSTALLED WITH SCREWS AT LEAST 3" IN LENGHT AND PENETRATING SUB-BUCKS AT LEAST 1"

6. HINGES ON EXTERIOR OUT SWINGING DOORS SHALL HAVE NON-REMOVABLE PINS.

7. JAMBS OF ALL EXTERIOR OFFSET TYPE IN-SWING(ING) DOORS BE RABBETED, OR OF SIMILAR FABRICATION, TO PREVENT DEFEATING THE PURPOSE OF THE STRIKE AND THE INTEGRITY OF LOCKS AND LATCHES.

8. SINGLE, SWINGING, EXTERIOR DOORS, IF WOOD SHALL BE SOLID CORE OF NOT LESS THAN 1 3/8 INCHES THICK.

9. GLASS AND EXTERIOR DOORS SHALL COMPLY WITH THE AMERICAN NATIONAL STANDARDS INSTITUTE'S STANDARD 297.1

10. VISION PANELS IN EXTERIOR DOORS OTHER THAN GLAZING WITHIN 40 INCHES OF INSIDE LOCKING ACTIVATING DEVICE OF LOOSE AND SWINGING DOORS SHALL COMPLY WITH AMERICAN NATIONAL STANDARDS INSTITUTE STANDARD 297.1.

11. SLIDING GLASS DOORS AND WINDOWS SHALL BE INSTALLED AND CONSTRUCTED SO THAT NO PANEL CAN BE LIFTED FROM THE TRACKS WHEN IN THE LOCKED POSITION AND SO AS TO COMPLY WITH THE ARCHITECTURAL ALUMINUM MFGS. ASSOC. STANDARDS FOR FORCED ENTRY RESISTANCE, AAMA 1303.3.

12. LOCKS IN EXTERIOR WINDOWS SHALL CUMPLY WITH SECTION 3104 (F.B.C.)

13. FRONT MAIN ENTRANCE DOORS SHALL BE PROVIDED WITH A DOOR SCOPE OR VISION PANELS.

FLOOD PROGRAM LEGEND:

for Compliance with Chapter 11c of the Dade County Code

N.G.V.D.(MSL 1929)

Site to be filled to County flood criteria elevation N.G.V.D. or an elevation no less than the highest approved crown elevation of the road abutting the property.

Area adjacent to lake or canal to be graded so as to prevent direct overland discharge of stormwater into lake or canal.

Lot will be graded so as to prevent direct overland discharge of stormwater onto adjacent property.
Applicant will provide certification prior to final inspection.

PROCESS: / FOLIO: / LOT		ADDRESS 1529 JEFFERSON AVE HIGHEST CROWN OF ROAD	
ELEVATION	LOWEST FLOOR	GARAGE/STORAGE	ADJACENT GRADE
EXISTING	7.42'	N.A	4.20'
PROPOSED	8.00'	N.A	4.20'
REQUIRED	8.00'	N.A	N.A

Tie-Beam Elevation Certificate, is required before making any inspection above lowest floor and a Final Elevation Certificate is required before issuance of certificate of occupancy or completion (Completion HOLD 186) (11c3-3d3) Call 375-6685

O.S.F.H.- (Outside Special Flood Hazard). All Electrical and Mechanical equipment must be located at or above the Required Lowest Floor Elevation.
S.F.H.- (Special Flood Hazard). All Electrical and Mechanical equipment must be located at or above the Base Flood Elevation or Required Lowest Floor Elevation

Lowest Floor- Shall mean the lowest floor of the lowest enclosed area (including basement). An unfinished or flood-resistant enclosure, usable for parking of vehicles, building access or storage in an area other than a basement area, is not considered a building's lowest floor; provided that such enclosure is not built as to render the structure in violation of the applicable non-elevation design requirements in Sections 11c-3, 11c-4, 11c-5. which ever is higher.

Garage or Storage (SFHA, OSHA(11c-5-f)) Fully encloses areas below the Base Flood Elevations shall be design to preclude finished living space except allowable uses i.e. parking, limited storage and building access and shall be design to allow for the entry and exit of flood-waters to automatically equalize hydrostatic flood forces on exterior walls. Design must be complying with this requirement must be either certified by a professional engineer or achitect and meet the following criteria:

(1) Provide a minimum of two(2) openings having a total net area of no less than 60 sq. in. ea. Bottom of all opening shall be no higher than one(1) foot above grade.

(2) The interior portion of such enclosed area shall NOT be partitioned or finished (flood resistant materials only) into separate rooms or air-conditioned.

Adjacent Grade 11c2-2- "Shall mean the highest elevation of the ground surface next to the proposed walls of the structure". 11c2-GG-"Minimum finished grade shall mean the elevation established in Dade County Flood Criterior Map at a specific developement site or crown of road elevation of an existing adjacent road, whichever is higher"or a waiver must be obtain). Site grading must be provided in a manner as to retain stormwater run-off into lakes or canals.

TERMITE PROTECTION NOTES

TERMITE PROTECTION. TERMITE PROTECTION SHALL BE PROVIDED BY REGISTERED TERMITICIDES OR OTHER APPROVED METHODS OF TERMITE PROTECTION LABELED FOR USE AS A PREVENTATIVE TREATMENT TO NEW CONSTRUCTION.

IF SOIL TREATMENT IS USED FOR SUBTERRANEAN TERMITE PREVENTION. THE INITIAL CHEMICAL SOIL TREATMENT INSIDE THE FOUNDATION PERIMETER SHALL BE DONE AFTER ALL EXCAVATION, BACKFILLING AND COMPACTION IS COMPLETE.

IF SOIL TREATMENT IS USED FOR SUBTERRANEAN TERMITE PREVENTION, SOIL AREA DISTURBED AFTER INITIAL CHEMICAL SOIL TREATMENT SHALL BE RETREATED WITH A CHEMICAL SOIL TREATMENT, INCLUDING SPACES BOXED OR FORMED.

IF SOIL TREATMENT IS USED FOR SUBTERRANEAN TERMITE PREVENTION, SPACE IN CONCRETE FLOORS BOXED OUT OR FORMED FOR THE SUBSEQUENT INSTALLATION OF PLUMBING TRAPS, DRAINS OR ANY OTHER PURPOSE SHALL BE CREATED BY USING PLASTIC OR METAL PERMANENTLY PLACED FORMS OF SUFFICIENT DEPTH TO ELIMINATE ANY PLANNED SOIL DISTURBANCE AFTER INITIAL CHEMICAL SOIL TREATMENT.

IF SOIL TREATMENT IS USED FOR SUBTERRANEAN TERMITE PREVENTION, CHEMICALLY TREATED SOIL SHALL BE PROTECTED WITH A MINIMUM 6 MIL VAPOR RETARDER TO PROTECT AGAINST RAINFALL DILUTION. IF RAINFALL OCCURS BEFORE VAPOR RETARDER PLACEMENT, RETREATMENT IS REQUIRED. ANY WORK, INCLUDING PLACE- MENT OF REINFORCING STEEL, DONE AFTER CHEMICAL TREATMENT UNTIL THE CONCRETE FLOOR IS POURED, SHALL BE DONE IN SUCH MANNER AS TO AVOID PENETRATING OR DISTUBING TREATED SOIL.

IF SOIL TREATMENT IS USED FOR SUBTERRANEAN TERMITE PREVENTION, CONCRETE OVERPOUR OR MORTAR ACCUMULATED ALONG THE EXTERIOR FOUNDATION PERIMETER SHALL BE REMOVED PRIOR TO EXTERIOR CHEMICAL SOIL TREATMENT, TO ENHANCE VERTICAL PENETRATION OF THE CHEMICALS.

IF SOIL TREATMENT IS USED FOR SUBTERRANEAN TERMITE PREVENTION, CHEMICAL SOIL TREATMENTS SHALL ALSO BE APPLIED UNDER ALL EXTERIOR CONCRETE OR GRADE WITHIN 1 FOOT (305 MM) OF THE PRIMARY STRUCTURE SIDEWALLS. ALSO, A VERTICAL CHEMICAL BARRIER SHALL BE APPLIED PROMPTLY AFTER CONSTRUCTION IS COMPLETED, INCLUDING INITIAL LANDSCAPING AND IRRIGATION/SPRINKLER INSTALLATION. ANY SOIL DISTURBED AFTER THE CHEMICAL VERTICAL BARRIER IS APPLIED SHALL BE PROMPTLY RETREATED.

TERMITE PROTECTION. ALL BUILDINGS SHALL HAVE PRECONSTRUCTION TREATMENT PROTECTION AGAINST SUBTERRANEAN TERMITES. THE RULES AND LAWS AS ESTABLISHED BY THE FLORIDA DEPARTMENT OF AGRICULTURE AND CONSUMER SERVICES SHALL BE DEEMED AS APPROVED WITH RESPECT TO PRE-CONSTRUCTION SOIL TREATMENT FOR PROTECTION AGAINST SUBTERRANEAN TERMITES. A CERTIFICATE OF COMPLIANCE SHALL BE ISSUED TO THE BUILDING DEPARTMENT BY THE LICENSED PEST CONTROL COMPANY THAT CONTAINS THE FOLLOWING STATEMENT:
"THE BUILDING HAS RECEIVED A COMPLETE TREATMENT FOR THE PREVENTION OF SUBTERRANEAN TERMITES. TREATMENT IS IN ACCORDANCE WITH RULES AND LAWS ESTABLISHED BY THE FLORIDA DEPARTMENT OF AGRICULTURE AND CONSUMER SERVICES."

PENETRATION. PROTECTIVE SLEEVES AROUND METALLIC PIPING PENETRATING CONCRETE SLAB-ON-GRADE FLOORS SHALL NOT BE OF CELLULOSE-CONTAINING MATERIALS AND SHALL RECEIVE APPLICATION OF A TERMITICIDE IN ANNULAR SPACE BETWEEN SLEEVE AND PIPE.

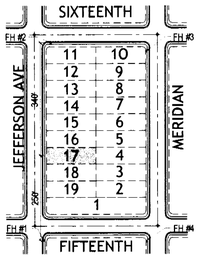

LOCATION PLAN
SCALE: N.T.S

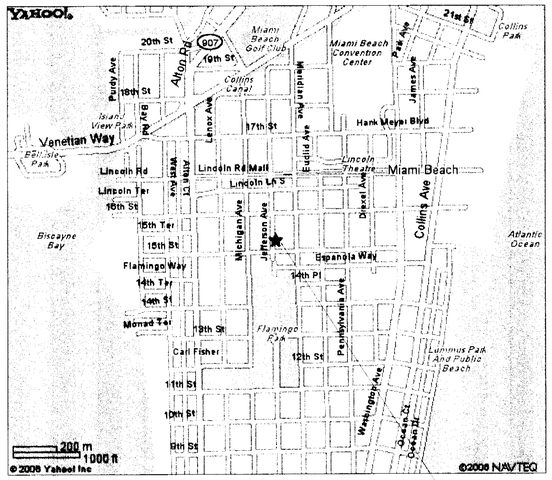

SUBJECT PROPERTY

LOCATION MAP
SCALE: N.T.S

ZONING DATA:

LEGAL DESCRIPTION

LOT 17, BLOCK 62, ,OF LINCOLN SUBDIVISION, ACCORDING TO THE PLAT THEREOF AS RECORDED IN PLAT BOOK 9, PAGE 69, OF THE PUBLIC RECORDS OF MIAMI-DADE COUNTY, FLORIDA.

SITE PLAN INFORMATION:

ZONING DESIGNATION: RM-1
TOTAL SITE AREA: 0.17 ACRES (7,500 S.F.)
TYPE OF OCCUPANCY: MULTI-FAMILY

SETBACKS

PEDESTAL

	ALLOWED	PROVIDED
FRONT	20'	16'-0" EXISTING
REAR	15'	15'-0"
NORTH SIDE	7'-6"	7'-6"
SOUTH SIDE	7'-6"	7'-6"

BALCONIES / ORNAMENTAL PROJECTIONS

		ALLOWED	PROVIDED
FRONT	N/A		
REAR	(25% OF 14')	3'-6"	3'-6"
NORTH SIDE	N/A		
SOUTH SIDE	N/A		

BUILDING TYPE:

RESIDENCES TYPE V-B 1 HOUR UNPROTECTED SPRINKLERED

BUILDING HEIGHT

	ALLOWED	PROVIDED
	40'-0"	30'-8" TO TOP OF ROOF SLAB
# OF STORIES ABOVE GRADE	3 STORIES	3 STORIES

PARKING

	REQUIRED	PROVIDED
6 UNITS X 1.5 = 9 SPACES		
REGULAR	8	0
HANDICAPPED	1	0

EXTERIOR WALL OPENINGS:

AREA			WALL AREA	OPENINGS AREA	% ALLOWED	% PROVIDED
1	EXISTING BUILDING UNPROTECTED	FIRE SEPARATION 10 - 15 FT. BETWEEN OLD & NEW BLDG.	245 SF	29.6 SF	15 %	12.08 %
2	EXISTING BUILDING UNPROTECTED	FIRE SEPARATION 15 - 20 FT. BETWEEN OLD & NEW BLDG.	730 SF	74.3 SF	25 %	10.17 %
3	NEW BUILDING PROTECTED PROTECTED	FIRE SEPARATION 15 - 20 FT. BETWEEN OLD & NEW BLDG.	70.77 SF	24.12 SF	75 %	34.08 %
4	NEW BUILDING PROTECTED PROTECTED	FIRE SEPARATION 5 - 10 FT. BETWEEN OLD & NEW BLDG.	300 SF	0 SF	15 %	0 %
5	NEW BUILDING PROTECTED PROTECTED	FIRE SEPARATION 20 - 25 FT. BETWEEN OLD & NEW BLDG.	979.73 SF	414.39 SF	UNLIMITED	42.29 %

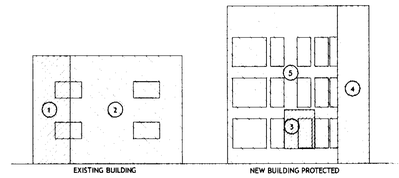

WALL OPENINGS AREAS
SCALE: N.T.S

EXST'G UNIT TYPES AND COUNT:

2 UNITS (1 BED - 1 BATH)
2 UNITS (2 BED - 2 BATH)
4 UNITS TOTAL

EXISTING BUILDING AREA

LEVEL 1 LIVING & STAIRS	= 1,672
LEVEL 2 LIVING & STAIRS	= 1,672
TOTAL FLOOR AREA	= 3,344 S.F.
NET SITE AREA	7,500 S.F.

	ALLOWED 1.25	PROVIDED
FLOOR AREA RATIO (SHADED AREA)	9,375 S.F.	9,294.41 S.F.

NEW +UNIT TYPES AND COUNT:

2 UNITS (1 BED - 2 BATH)
4 UNITS (1 BED - 1-1/2 BATH)
6 UNITS TOTAL

NEW BUILDING AREA

LEVEL 1 ELEVATOR, STAIRS & LIVING	= 1981.95
LEVEL 2 STAIRS & LIVING	= 1904.58
LEVEL 3 STAIRS & LIVING	= 1904.58
LEVEL 4 ROOF TERRACE STAIRS	= 159.30
TOTAL FLOOR AREA	= 5,950.41 S.F.

NEW UNIT AREAS		EXST'G UNIT AREAS	
TOTAL NUMBER OF UNITS	6	TOTAL NUMBER OF UNITS	4
UNIT 1	952.62 S.F.	UNIT 1	689.50 S.F.
UNIT 2	854.98 S.F.	UNIT 2	842.20 S.F.
UNIT 3	952.62 S.F.	UNIT 3	689.50 S.F.
UNIT 4	854.98 S.F.	UNIT 4	842.20 S.F.
UNIT 5	977.63 S.F.		
UNIT 6	928.49 S.F.		
TOTAL UNIT AREA	5,521.32 S.F.	TOTAL UNIT AREA	3,063.40 S.F.

REMOVE & REPLACE ENTIRE SIDEWALK, CURB & GUTTER ALONG THE ENTIRE PROPERTY. CMB-PW 10/03/07

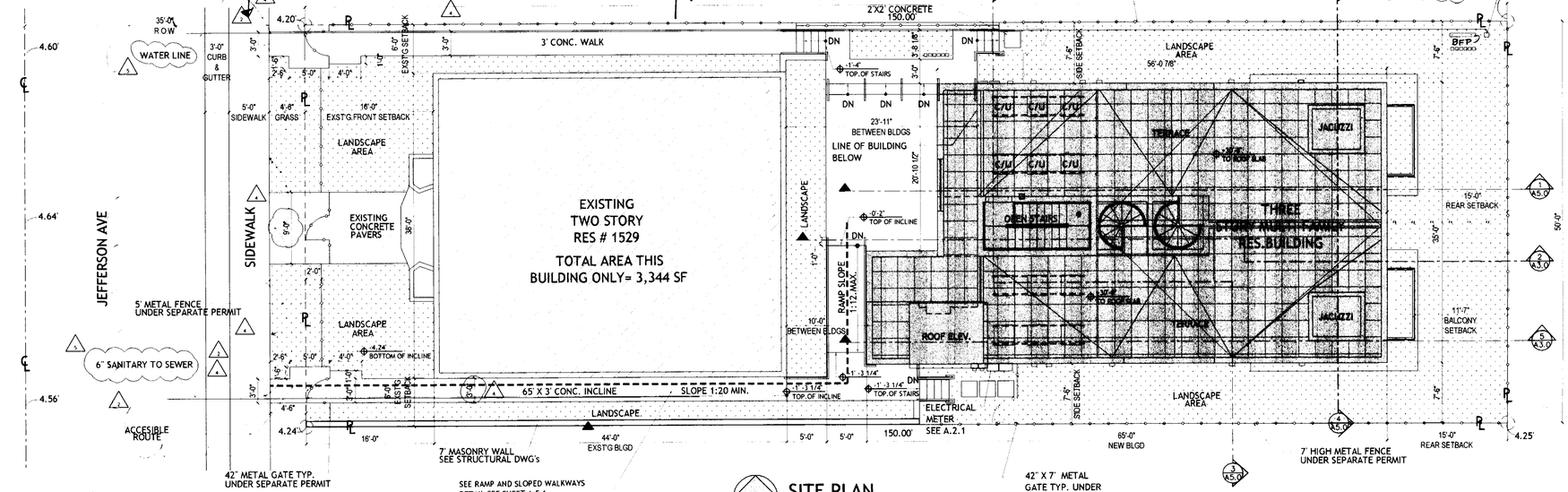

SEE RAMP AND SLOPED WALKWAYS DETAIL SEE SHEET A-5.1

SITE PLAN
SCALE: 1/8" = 1'-0"

(8' WIDE) MILLING & RESURFACING 2" AVERAGE ALONG THE ENTIRE PROPERTY ON FARIKING LANE UNDER SEPARATE PUBLIC WORKS R.O.W PERMIT IN COMPLIANCE W/ C.I.P. FLAMINGO - LUMMUS NEIGBORHOOD IMPROVEMENT PLAN. CMB-PW 10/03/07

DRAWN BY:
REVISIONS:
4 04-13-07
3 03-10-07
2 01-31-07
1 10-13-06
5 07-30-07

3DESIGN
ANTHONY LEON
AA0004752
ARCHITECTURE
4500 BISCAYNE BLVD. SUITE#604 MIAMI, FL 33157 T 305 458 9577 F 305 458 9579

NEW BUILDING FOR 1529 JEFFERSON AVE MIAMI BEACH, FL 33139

SEAL

A-1.0

JUNE 6, 2006

GENERAL NOTES

1. THESE DOCUMENTS, AS INSTRUMENTS OF SERVICE, ARE THE PROPERTY OF 3DESIGN, Inc. AND MAY NOT BE USED OR REPRODUCED IN ANY MANNER WITHOUT EXPRESSED WRITTEN CONSENT
2. IT IS NOT THE INTENT OF THESE PLANS TO SHOW EVERY MINOR DETAIL OF CONSTRUCTION. THE GENERAL CONTRACTOR IS EXPECTED TO FURNISH AND INSTALL ALL ITEMS REQUIRED TO COMPLETE ALL BUILDING SYSTEMS AND PROVIDE ALL NECESSARY APPURTENANCES FOR EQUIPMENT TO BE PLACED IN PROPER WORKING ORDER WITH QUALITY CRAFTMANSHIP WITHOUT INCREASING THE CONTRACT SUM OR CONTRACT COMPLETION DATE.
3. ALL WORK DESCRIBED BY THESE DOCUMENTS MUST BE PERFORMED BY CONSTRUCTION PROFESSIONALS LICENCED & INSURED IN THE STATE OF FLORIDA (F.B.C. REQUIRED). ALL WORK SHALL BE PERFORMED IN ACCORDANCE W/ THE NATIONAL ELECTRIC CODE AND F.B.C.
4. THE GENERAL CONTRACTOR SHALL VERIFY ALL CONDITIONS AND DIMENSIONS AT THE JOB SITE PRIOR TO COMMENCING THE WORK. IF THERE ANY DISCREPANCIES BETWEEN THESE DRAWINGS AND FIELD CONDITIONS, THE CONTRACTOR SHALL NOTIFY THE ARCHITECT PRIOR TO COMMENCING THE WORK FOR CLEAR INSTRUCTION.
5. DO NOT SCALE THE DRAWINGS. REFER TO FIGURED DIMENSIONS.
6. THE CONTRACTOR IS TO ACQUIRE ALL REQUIRED PERMITS FOR THE DEMOLITION, CONSTRUCTION, FINISHING, AND OCCUPANCY OF THE PROJECT. ALL WORK SHALL BE PERFORMED IN ACCORDANCE WITH THE F.B.C., LATEST EDITION.
7. ALL WORK DONE UNDER THE SUPERVISION OF THE GENERAL CONTRACTOR SHALL BE IN A NEAT AND WORKMAN-LIKE MANNER IN ACCORDANCE WITH FEDERAL, STATE, AND LOCAL GOVERNING AGENCIES HAVING JURISDICTION.
8. THE GENERAL CONTRACTOR IS TO PROVIDE, LOCATE AND BUILD INTO THE WORK ALL SUPPLEMENTARY MATERIALS (INSERTS, ANCHORS, ANGLES, PLATES, OPENINGS, SLEEVES, HANGERS, SLAB DEPRESSIONS, PITCHES, ETC.) AS REQUIRED TO PROPERLY INSTALL, SUPPORT, BRACE, AND SHORE ALL BUILDING COMPONENTS WITHIN THE SCOPE OF THE PROJECT.
9. THE GENERAL CONTRACTOR SHALL REPAIR ALL DAMAGES TO THE EXISTING BUILDING DURING CONSTRUCTION RESULTING FROM SUCH LACK OF CARE AND DUE DILIGENCE AND MAY NOT CLAIM MONETARY DAMAGES OR TIME DELAYS AGAINST THE CONTRACT SUM OR CONTRACT COMPLETION DATE.
10. THE GENERAL CONTRACTOR SHALL COORDINATE AND SCHEDULE THE WORK OF ALL TRADES TO INSURE THAT THE PROJECT IS COMPLETED BY THE CONTRACT COMPLETION DATE.
11. PRIOR TO COMMENCING WORK, THE GENERAL CONTRACTOR SHALL SITE VERIFY THE LOCATION OF ALL EQUIPMENT TO BE REMOVED/RELOCATED. REMOVALS SHALL BE COORDINATED WITH THE OWNER. IF SO DIRECTED, THE G.C. MAY INCLUDE ANY ADDITIONAL COSTS TO THE BID.
12. THE GENERAL CONTRACTOR SHALL PROVIDE AN ONSITE DUMPSTER IN A LOCATION COORDINATED WITH THE OWNER FOR THE DISPOSAL OF REMOVED MATERIAL/CONSTRUCTION DEBRIS. THE DUMPSTER SHALL BE EMPTIED AT APPROPRIATE INTERVALS TO PREVENT OVERFLOW AND UNSIGHTLY CONDITIONS.
13. IT IS THE INTENT OF 3DESIGN, Inc. THAT THIS WORK BE IN CONFORMANCE WITH ALL REQUIREMENTS OF THE BUILDING AUTHORITIES HAVING JURISDICTION OVER THIS TYPE OF CONSTRUCTION AND OCCUPANCY. THE G.C. SHALL NOTIFY THE ARCHITECT/ENGINEERS OF RECORD IMMEDIATELY IF ANY DISCREPANCIES ARE ENCOUNTERED BETWEEN THE DRAWINGS AND THESE REQUIREMENTS. ANY DISCREPANCIES WILL BE RESOLVED BY ARCHITECT / ENGINEER OF RECORD PRIOR TO PROCEEDING WITH THE WORK.
14. THE GENERAL CONTRACTOR SHALL PROVIDE THE ARCHITECT WITH RED-LINE AS-BUILT DRAWINGS FOR ALL FIELD CHANGES/ADDITIONS TO THE WORK INCLUDED IN THE WORK.
15. THE GENERAL CONTRACTOR SHALL PROVIDE AN ITEMIZED COST BREAKDOWN OF ALL ITEMS AND PHASES OF CONSTRUCTION AT THE TIME OF BIDDING.
16. 3DESIGN, Inc. IS NOT RESPONSIBLE FOR CONSTRUCTION MEANS, METHODS, SEQUENCES, PROCEDURES, PRECAUTIONS, OR PROGRAMS RELATED TO THIS PROJECTS CONSTRUCTION.
17. ALL WORK IS TO BE PLUM, LINE, SQUARE, AND ADEQUATELY SUPPORTED. FILL ALL VOIDS BETWEEN COMPONENTS. ALL ITEMS THAT DO NOT MEET 3DESIGN, Inc. SATISFACTION AS TO GOOD TRADE PRACTICES AND QUALITY CRAFTMANSHIP WILL BE REDONE AT THE G.C.'S EXPENSE.
18. THE GENERAL CONTRACTOR IS TO MAINTAIN A SAFE SITE, CLEAR OF DEBRIS AT ALL TIMES.
19. THE GENERAL CONTRACTOR AND ALL SUBCONTRACTORS ARE TO GUARANTEE THEIR WORK FOR A MINIMUM PERIOD OF ONE YEAR IN WRITING SUBMITTED WITH THE BID.
20. ALL DETAILS AND SECTIONS SHOWN ON THESE DRAWINGS ARE INTENDED TO BE TYPICAL AND SHALL BE CONSTRUED TO APPLY TO ANY SIMILAR SITUATION ELSEWHERE IN THE WORK EXCEPT WHERE A DIFFERENT DETAIL IS SHOWN. IT IS THE G.C.'S RESPONSIBILITY TO FORSEE ADDITIONAL CONDITIONS PRIOR TO COMMENCING THE WORK AND NOTIFY THE ARCHITECT IMMEDIATELY.
21. ALL ASSEMBLIES REFERRED TO AS FIRE-RATED SHALL BE A MINIMUM OF ONE HOUR UNLESS OTHERWISE INDICATED. ALL PENETRATIONS THROUGH ANY RATED ASSEMBLY SHALL BE PROVIDED W/ APPROVED PENETRATION RATED DEVICES.
22. THE GENERAL CONTRACTOR SHALL PROVIDE CUSTOM AND MULTI-COLOR PAINT SELECTIONS FOR OWNER'S APPROVAL.
23. ALL HARDWARE, LIGHTING & BATHROOM FIXTURES AND MISC. SPECIFICATIONS NOT SPECIFICALLY CALLED OUT ON THE DRAWINGS SHALL BE PROVIDED BY THE OWNER.
24. THE GENERAL CONTRACTOR SHALL PROVIDE SHOP DRAWINGS FOR TRUSSES, STORM SHUTTERS, REINFORCING STEEL, WINDOWS, DOORS, CAST CONCRETE, ORNAMENTAL IRON, STEEL CONNECTORS, ORNAMENTAL WOOD, ETC. TO THE ARCHITECT FOR REVIEW PRIOR TO COMMENCING THE WORK.
25. THE GENERAL CONTRACTOR SHALL PROVIDE A TELEPHONE AND TELEPHONE LINE AT THE JOB SITE. THE G.C. IS RESPONSIBLE FOR IT'S USE.

BURGLARY/SECURITY NOTES

1. ALL LOCKS ON EXTERIOR DOORS AND DOORS CONNECTING GARAGE AREAS SHALL BE CAPABLE OF RESISTING A FORCE OF 300 POUNDS APPLIED IN ANY MOVABLE DIRECTION AND IN ACCORDANCE WITH RESISTANCE STANDARDS SET FORTH IN 3601.2 (F.B.C.)

2. ALL SINGLE EXTERIOR SWING DOORS SHALL HAVE A LOCK TO BE KEY OPERATED FROM EXTERIOR WITH A MINIMUM OF 6000 POSSIBLE KEY CHANGES OR LOCKING AUXILIARY SINGLE DEAD BOLT (MIN. 1 INCH THROW) WITH HARDENED BOLT INSERTS.

3. THE ACTIVE LEAF OF PAIRS OF EXTERIOR SWING DOORS SHALL HAVE SAME LOCKS AS REQUIRED FOR SINGLE EXTERIOR SWING DOORS. THE INACTIVE LEAF OF THESE PAIRS OF DOORS SHALL HAVE MULTIPLE POINT LOCKS WITH 5/8 INCH MINIMUM THROW BOLTS WITH INSERTS.

4. SLIDING GLASS DOORS SHALL BE PROVIDED WITH SLIDING DOOR DEAD BOLTS OR A BOLT OR PIN NOT REMOVABLE OR OPERABLE FROM EXTERIOR, AT THE JAMB, HEAD, SILL OR AT MEETING MULLIONS. THESE DOORS SHALL BE REINFORCED IN THE STRIKE AND LOCK AREA TO MAINTAIN BOLT STRENGTH EFFECTIVENESS, IF NECESSARY, AND SUCH DOORS SHALL HAVE NO SCREWS REMOVABLE FROM OUTSIDE WHICH WOULD FACILITATE READY ENTRY FROM OUTSIDE.

5. JAMBS SHALL BE PROVIDED WITH APPROVED REINFORCED STRIKES INSTALLED WITH SCREWS AT LEAST 3" IN LENGHT AND PENETRATING SUB-BUCKS AT LEAST 1"

6. HINGES ON EXTERIOR OUT SWINGING DOORS SHALL HAVE NON-REMOVABLE PINS.

7. JAMBS OF ALL EXTERIOR OFFSET TYPE IN-SWING(ING) DOORS BE RABBETED, OR OF SIMILAR FABRICATION, TO PREVENT DEFEATING THE PURPOSE OF THE STRIKE AND THE INTEGRITY OF LOCKS AND LATCHES.

8. SINGLE, SWINGING, EXTERIOR DOORS, IF WOOD SHALL BE SOLID CORE OF NOT LESS THAN 1 3/8 INCHES THICK.

9. GLASS AND EXTERIOR DOORS SHALL COMPLY WITH THE AMERICAN NATIONAL STANDARDS INSTITUTE'S STANDARD 297.1

10. VISION PANELS IN EXTERIOR DOORS OTHER THAN GLAZING WITHIN 40 INCHES OF INSIDE LOCKING ACTIVATING DEVICE OF LOOSE AND SWINGING DOORS SHALL COMPLY WITH AMERICAN NATIONAL STANDARDS INSTITUTE STANDARD 297.1.

11. SLIDING GLASS DOORS AND WINDOWS SHALL BE INSTALLED AND CONSTRUCTED SO THAT NO PANEL CAN BE LIFTED FROM THE TRACKS WHEN IN THE LOCKED POSITION AND SO AS TO COMPLY WITH THE ARCHITECTURAL ALUMINUM MFGS. ASSOC. STANDARDS FOR FORCED ENTRY RESISTANCE, AAMA 1303.3.

12. LOCKS IN EXTERIOR WINDOWS SHALL CUMPLY WITH SECTION 3104 (F.B.C.)

13. FRONT MAIN ENTRANCE DOORS SHALL BE PROVIDED WITH A DOOR SCOPE OR VISION PANELS.

FLOOD PROGRAM LEGEND:

for Compliance with Chapter 11c of the Dade County Code

N.G.V.D.(MSL 1929)

Site to be filled to County flood criteria elevation N.G.V.D. or an elevation no less than the highest approved crown elevation of the road abutting the property.

Area adjacent to lake or canal to be graded so as to prevent direct overland discharge of stormwater into lake or canal.

Lot will be graded so as to prevent direct overland discharge of stormwater onto adjacent property.
Applicant will provide certification prior to final inspection.

PROCESS:		ADDRESS 1529 JEFFERSON AVE	
FOLIO:			
LOT		HIGHEST CROWN OF ROAD	
ELEVATION	LOWEST FLOOR	GARAGE/STORAGE	ADJACENT GRADE
EXISTING	7.42'	N.A	4.20'
PROPOSED	8.00'	N.A	4.20'
REQUIRED	8.00'	NA	NA

Tie-Beam Elevation Certificate, is required before making any inspection above lowest floor and a Final Elevation Certificate is required before issuance of certificate of occupancy or completion (Completion HOLD 186) (11c3-3d3) Call 375-6685

O.S.F.H.- (Outside Special Flood Hazard). All Electrical and Mechanical equipment must be located at or above the Required Lowest Floor Elevation.
S.F.H. - (Special Flood Hazard). All Electrical and Mechanical equipment must be located at or above the Base Flood Elevation or Required Lowest Floor Elevation

Lowest Floor- Shall mean the lowest floor of the lowest enclosed area (including basement). An unfinished or flood-resistant enclosure, usable for parking of vehicles, building access or storage in an area other than a basement area, is not considered a building's lowest floor; provided that such enclosure is not built as to render the structure in violation of the applicable non-elevation design requirements in Sections 11c-3, 11c-4, 11c-5. which ever is higher.

Garage or Storage (SFHA, OSHA(11c-5-(i)) Fully encloses areas below the Base Flood Elevations shall be design to preclude finished living space except allowable uses i.e. parking, limited storage and building access and shall be design to allow for the entry and exit of flood-waters to automatically equalize hydrostatic flood forces on exterior walls. Design must be complying with this requirement must be either certified by a professional engineer or architect and meet the following criteria:

(1) Provide a minimum of two(2) openings having a total net area of no less than 60 sq. in. ea. Bottom of all opening shall be no higher than one(1) foot above grade.

(2) The interior portion of such enclosed area shall NOT be partitioned or finished (flood resistant materials only) into separate rooms or air-conditioned.

Adjacent Grade 11c2-2- "Shall mean the highest elevation of the ground surface next to the proposed walls of the structure". 11c2-GG-"Minimum finished grade shall mean the elevation established in Dade County Flood Criterior Map at a specific developement site or crown of road elevation of an existing adjacent road, whichever is higher"(or a waiver must be obtain). Site grading must be provided in a manner as to direct stormwater run-off into lakes or canals.

TERMITE PROTECTION NOTES

TERMITE PROTECTION. TERMITE PROTECTION SHALL BE PROVIDED BY REGISTERED TERMITICIDES OR OTHER APPROVED METHODS OF TERMITE PROTECTION LABELED FOR USE AS A PREVENTATIVE TREATMENT TO NEW CONSTRUCTION.

IF SOIL TREATMENT IS USED FOR SUBTERRANEAN TERMITE PREVENTION, THE INITIAL CHEMICAL SOIL TREATMENT INSIDE THE FOUNDATION PERIMETER SHALL BE DONE AFTER ALL EXCAVATION, BACKFILLING AND COMPACTION IS COMPLETE.

IF SOIL TREATMENT IS USED FOR SUBTERRANEAN TERMITE PREVENTION, SOIL AREA DISTURBED AFTER INITIAL CHEMICAL SOIL TREATMENT SHALL BE RETREATED WITH A CHEMICAL SOIL TREATMENT, INCLUDING SPACES BOXED OR FORMED.

IF SOIL TREATMENT IS USED FOR SUBTERRANEAN TERMITE PREVENTION, SPACE IN CONCRETE FLOORS BOXED OUT OR FORMED FOR THE SUBSEQUENT INSTALLATION OF PLUMBING TRAPS, DRAINS OR ANY OTHER PURPOSE SHALL BE CREATED BY USING PLASTIC OR METAL PERMANENTLY PLACED FORMS OF SUFFICIENT DEPTH TO ELIMINATE ANY PLANNED SOIL DISTURBANCE AFTER INITIAL CHEMICAL SOIL TREATMENT.

IF SOIL TREATMENT IS USED FOR SUBTERRANEAN TERMITE PREVENTION, CHEMICALLY TREATED SOIL SHALL BE PROTECTED WITH A MINIMUM 6 MIL VAPOR RETARDER TO PROTECT AGAINST RAINFALL DILUTION. IF RAINFALL OCCURS BEFORE VAPOR RETARDER PLACEMENT, RETREATMENT IS REQUIRED. ANY WORK, INCLUDING PLACE- MENT OF REINFORCING STEEL, DONE AFTER CHEMICAL TREATMENT UNTIL THE CONCRETE FLOOR IS POURED, SHALL BE DONE IN SUCH MANNER AS TO AVOID PENETRATING OR DISTUBING TREATED SOIL.

IF SOIL TREATMENT IS USED FOR SUBTERRANEAN TERMITE PREVENTION, CONCRETE OVERPOUR OR MORTAR ACCUMULATED ALONG THE EXTERIOR FOUNDATION PERIMETER SHALL BE REMOVED PRIOR TO EXTERIOR CHEMICAL SOIL TREATMENT, TO ENHANCE VERTICAL PENETRATION OF THE CHEMICALS.

IF SOIL TREATMENT IS USED FOR SUBTERRANEAN TERMITE PREVENTION, CHEMCAL SOIL TREATMENTS SHALL ALSO BE APPLIED UNDER ALL EXTERIOR CONCRETE OR GRADE WITHIN 1 FOOT (305 MM) OF THE PRIMARY STRUCTURE SIDEWALLS. ALSO, A VERTICAL CHEMICAL BARRIER SHALL BE APPLIED PROMPTLY AFTER CONSTRUCTION IS COMPLETED, INCLUDING INITIAL LANDSCAPING AND IRRIGATION/SPRINKLER INSTALLATION. ANY SOIL DISTURBED AFTER THE CHEMICAL VERTICAL BARRIER IS APPLIED SHALL BE PROMPTLY RETREATED.

TERMITE PROTECTION. ALL BUILDINGS SHALL HAVE PRECONSTRUCTION TREATMENT PROTECTION AGAINST SUBTERRANEAN TERMITES. THE RULES AND LAWS AS ESTABLISHED BY THE FLORIDA DEPARTMENT OF AGRICULTURE AND CONSUMER SERVICES SHALL BE DEEMED AS APPROVED WITH RESPECT TO PRE-CONSTRUCTION SOIL TREATMENT FOR PROTECTION AGAINST SUBTERRANEAN TERMITES. A CERTIFICATE OF COMPLIANCE SHALL BE ISSUED TO THE BUILDING DEPARTMENT BY THE LICENSED PEST CONTROL COMPANY THAT CONTAINS THE FOLLOWING STATEMENT:
"THE BUILDING HAS RECEIVED A COMPLETE TREATMENT FOR THE PREVENTION OF SUBTERRANEAN TERMITES. TREATMENT IS IN ACCORDANCE WITH RULES AND LAWS ESTABLISHED BY THE FLORIDA DEPARTMENT OF AGRICULTURE AND CONSUMER SERVICES."

PENETRATION. PROTECTIVE SLEEVES AROUND METALLIC PIPING PENETRATING CONCRETE SLAB-ON-GRADE FLOORS SHALL NOT BE OF CELLULOSE-CONTAINING MATERIALS AND SHALL RECEIVE APPLICATION OF A TERMITICIDE IN ANNULAR SPACE BETWEEN SLEEVE AND PIPE.

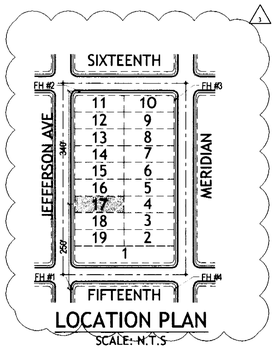

LOCATION PLAN
SCALE: N.T.S

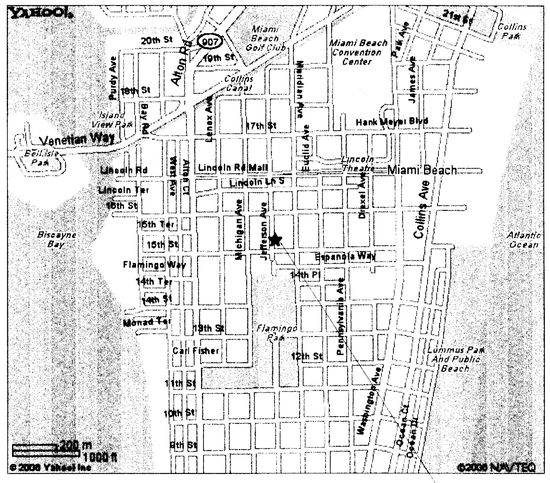

SUBJECT PROPERTY

LOCATION MAP
SCALE: N.T.S

ZONING DATA:

LEGAL DESCRIPTION

LOT 17, BLOCK 62, ,OF LINCOLN SUBDIVISION, ACCORDING TO THE PLAT THEREOF AS RECORDED IN PLAT BOOK 9, PAGE 69, OF THE PUBLIC RECORDS OF MIAMI-DADE COUNTY, FLORIDA.

SITE PLAN INFORMATION:

ZONING DESIGNATION: RM-1
TOTAL SITE AREA: 0.17 ACRES (7,500 S.F.)
TYPE OF OCCUPANCY: MULTI-FAMILY

SETBACKS

PEDESTAL

	ALLOWED	PROVIDED
FRONT	20'	16'-0" EXISTING
REAR	15'	15'-0"
NORTH SIDE	7'-6"	7'-6"
SOUTH SIDE	7'-6"	7'-6"

BALCONIES / ORNAMENTAL PROJECTIONS

		ALLOWED	PROVIDED
FRONT	N/A		
REAR	(25% OF 14')	3'-6"	3'-6"
NORTH SIDE	N/A		
SOUTH SIDE	N/A		

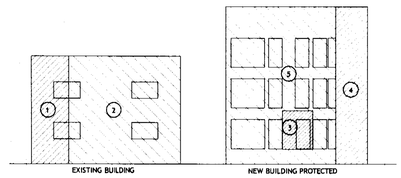

WALL OPENINGS AREAS
SCALE: N.T.S

NEW +UNIT TYPES AND COUNT:

2 UNITS (1 BED - 2 BATH)
4 UNITS (1 BED - 1-1/2 BATH)
6 UNITS TOTAL

NEW BUILDING AREA

LEVEL 1 ELEVATOR, STAIRS & LIVING	= 1981.95
LEVEL 2 STAIRS & LIVING	= 1904.58
LEVEL 3 STAIRS & LIVING	= 1904.58
LEVEL 4 ROOF TERRACE STAIRS	= 159.30
TOTAL FLOOR AREA	= 5,950.41 S.F.

BUILDING TYPE:

RESIDENCES TYPE V-B 1 HOUR UNPROTECTED SPRINKLERED

BUILDING HEIGHT

	ALLOWED	PROVIDED
	40'-0"	30'-8" TO TOP OF ROOF SLAB
# OF STORIES ABOVE GRADE	3 STORIES	3 STORIES

PARKING

	REQUIRED	PROVIDED
6 UNITS X 1.5 = 9 SPACES		
REGULAR	8	0
HANDICAPPED	1	0

EXTERIOR WALL OPENINGS:

AREA				WALL AREA	OPENINGS AREA	% ALLOWED	% PROVIDED
1	EXISTING BUILDING UNPROTECTED	FIRE SEPARATION 10 - 15 FT.	BETWEEN OLD & NEW BLDG.	245 SF	29.6 SF	15 %	12.08 %
2	EXISTING BUILDING UNPROTECTED	FIRE SEPARATION 15 - 20 FT.	BETWEEN OLD & NEW BLDG.	730 SF	74.3 SF	25 %	10.17 %
3	NEW BUILDING PROTECTED PROTECTED	FIRE SEPARATION 15 - 20 FT.	BETWEEN OLD & NEW BLDG.	70.77 SF	24.12 SF	75 %	34.08 %
4	NEW BUILDING PROTECTED PROTECTED	FIRE SEPARATION 5 - 10 FT.	BETWEEN OLD & NEW BLDG.	300 SF	0 SF	15 %	0 %
5	NEW BUILDING PROTECTED PROTECTED	FIRE SEPARATION 20 - 25 FT.	BETWEEN OLD & NEW BLDG.	979.73 SF	414.39 SF	UNLIMITED	42.29 %

EXST'G UNIT TYPES AND COUNT:

2 UNITS (1 BED - 1 BATH)
2 UNITS (2 BED - 2 BATH)
4 UNITS TOTAL

EXISTING BUILDING AREA

LEVEL 1 LIVING & STAIRS	= 1,672
LEVEL 2 LIVING & STAIRS	= 1,672
TOTAL FLOOR AREA	= 3,344 S.F.
NET SITE AREA	7,500 S.F.

	ALLOWED 1.25	PROVIDED
FLOOR AREA RATIO (SHADED AREA)	9,375 S.F.	9,294.41 S.F.

NEW UNIT AREAS		EXST'G UNIT AREAS	
TOTAL NUMBER OF UNITS	6	TOTAL NUMBER OF UNITS	4
UNIT 1	952.62 S.F.	UNIT 1	689.50 S.F.
UNIT 2	854.98 S.F.	UNIT 2	842.20 S.F.
UNIT 3	952.62 S.F.	UNIT 3	689.50 S.F.
UNIT 4	854.98 S.F.	UNIT 4	842.20 S.F.
UNIT 5	977.63 S.F.		
UNIT 6	928.49 S.F.		
TOTAL UNIT AREA	5,521.32 S.F.	TOTAL UNIT AREA	3,063.40 S.F.

DRAWN BY:
REVISIONS:
4 04-13-07
3 03-10-07
2 01-31-07
1 10-13-06

3DESIGN INC
ANTHONY LEON
ARCHITECTURE
AR0026752
4300 BISCAYNE BLVD. SUITE 404 MIAMI, FL 33137 T 305 438 9577 F 305 438 9579

5-24-07
SEAL

NEW BUILDING
FOR
1529 JEFFERSON AVE
MIAMI BEACH, FL
33139

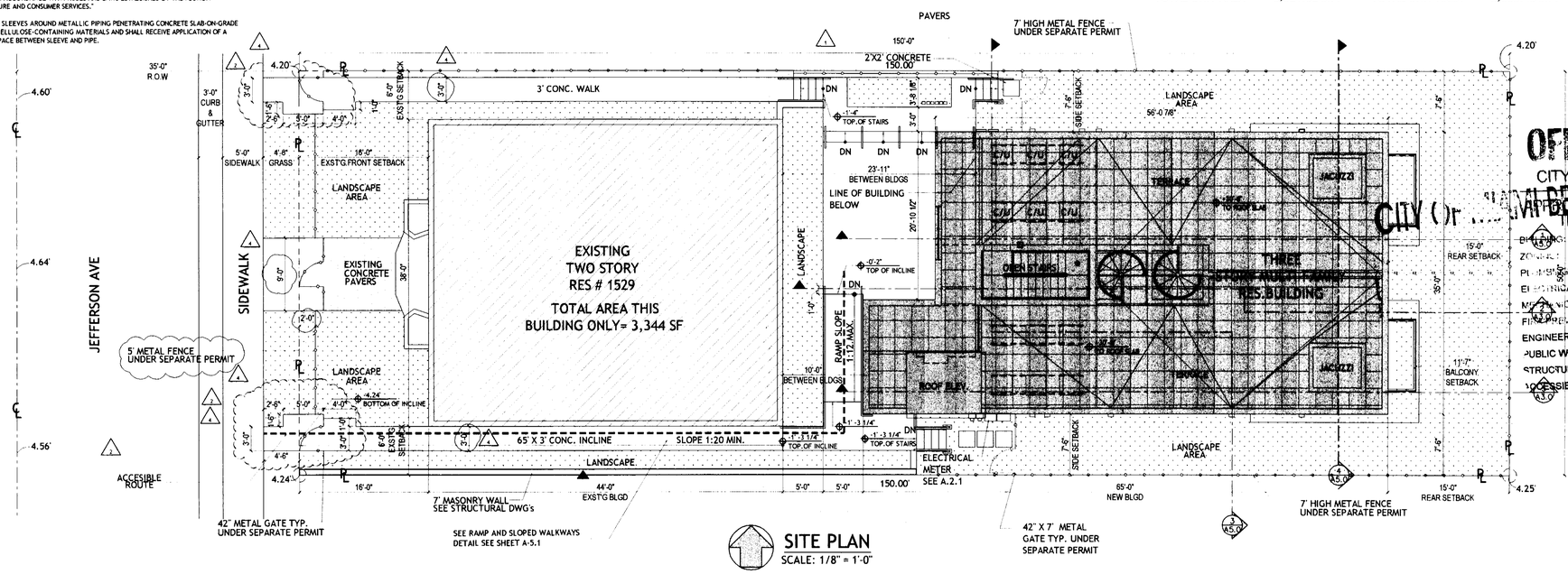

SITE PLAN
SCALE: 1/8" = 1'-0"

OFFICE COPY
CITY OF MIAMI BEACH
APPROVED FOR PERMIT BY THE FOLLOWING:
BUILDING:
ZONING:
PLANNING:
ELECTRICAL:
MECHANICAL:
FIRE PREVENTION:
ENGINEERING:
PUBLIC WORKS:
STRUCTURAL:
ACCESSIBILITY:
JUN 12 2007

A-1.0
JUNE 6, 2006

GENERAL NOTES

1. THESE DOCUMENTS, AS INSTRUMENTS OF SERVICE, ARE THE PROPERTY OF 3DESIGN, Inc. AND MAY NOT BE USED OR REPRODUCED IN ANY MANNER WITHOUT EXPRESSED WRITTEN CONSENT
2. IT IS NOT THE INTENT OF THESE PLANS TO SHOW EVERY MINOR DETAIL OF CONSTRUCTION. THE GENERAL CONTRACTOR IS EXPECTED TO FURNISH AND INSTALL ALL ITEMS REQUIRED TO COMPLETE ALL BUILDING SYSTEMS AND PROVIDE ALL NECESSARY APPURTENANCES FOR EQUIPMENT TO BE PLACED IN PROPER WORKING ORDER WITH QUALITY CRAFTMANSHIP WITHOUT INCREASING THE CONTRACT SUM OR CONTRACT COMPLETION DATE.
3. ALL WORK DESCRIBED BY THSE DOCUMENTS MUST BE PERFORMED BY CONSTRUCTION PROFESSIONALS LICENCED & INSURED IN THE STATE OF FLORIDA (F.B.C. REQUIRED). ALL WORK SHALL BE PERFORMED IN ACCORDANCE W/ THE NATIONAL ELECTRIC CODE AND F.B.C.
4. THE GENERAL CONTRACTOR SHALL VERIFY ALL CONDITIONS AND DIMENSIONS AT THE JOB SITE PRIOR TO COMMENCING THE WORK. IF THERE ANY DISCREPANCIES BETWEEN THESE DRAWINGS AND FIELD CONDITIONS, THE CONTRACTOR SHALL NOTIFY THE ARCHITECT PRIOR TO COMMENCING THE WORK FOR CLEAR INSTRUCTION.
5. DO NOT SCALE THE DRAWINGS. REFER TO FIGURED DIMENSIONS.
6. THE CONTRACTOR IS TO ACQUIRE ALL REQUIRED PERMITS FOR THE DEMOLITION, CONSTRUCTION, FINISHING, AND OCCUPANCY OF THE PROJECT. ALL WORK SHALL BE PERFORMED IN ACCORDANCE WITH THE F.B.C., LATEST EDITION.
7. ALL WORK DONE UNDER THE SUPERVISION OF THE GENERAL CONTRACTOR SHALL BE IN A NEAT AND WORKMAN-LIKE MANNER IN ACCORDANCE WITH FEDERAL, STATE, AND LOCAL GOVERNING AGENCIES HAVING JURISDICTION.
8. THE GENERAL CONTRACTOR IS TO PROVIDE, LOCATE AND BUILD INTO THE WORK ALL SUPPLEMENTARY MATERIALS (INSERTS, ANCHORS, ANGLES, PLATES, OPENINGS, SLEEVES, HANGERS, SLAB DEPRESSIONS, PITCHES, ETC.) AS REQUIRED TO PROPERLY INSTALL, SUPPORT, BRACE, AND SHORE ALL BUILDING COMPONENTS WITHIN THE SCOPE OF THE PROJECT.
9. THE GENERAL CONTRACTOR SHALL REPAIR ALL DAMAGES TO THE EXISTING BUILDING DURING CONSTRUCTION RESULTING FROM SUCH LACK OF CARE AND DUE DILIGENCE AND MAY NOT CLAIM MONETARY DAMAGES OR TIME DELAYS AGAINST THE CONTRACT SUM OR CONTRACT COMPLETION DATE.
10. THE GENERAL CONTRACTOR SHALL COORDINATE AND SCHEDULE THE WORK OF ALL TRADES TO INSURE THAT THE PROJECT IS COMPLETED BY THE CONTRACT COMPLETION DATE.
11. PRIOR TO COMMENCING WORK, THE GENERAL CONTRACTOR SHALL SITE VERIFY THE LOCATION OF ALL EQUIPMENT TO BE REMOVED/RELOCATED. REMOVALS SHALL BE COORDINATED WITH THE OWNER. IF SO DIRECTED, THE G.C. MAY INCLUDE ANY ADDITIONAL COSTS TO THE BID.
12. THE GENERAL CONTRACTOR SHALL PROVIDE AN ONSITE DUMPSTER IN A LOCATION COORDINATED WITH THE OWNER FOR THE DISPOSAL OF REMOVED MATERIAL/CONSTRUCTION DEBRIS. THE DUMPSTER SHALL BE EMPTIED AT APPROPRIATE INTERVALS TO PREVENT OVERFLOW AND UNSIGHTLY CONDITIONS.
13. IT IS THE INTENT OF 3DESIGN, Inc. THAT THIS WORK BE IN CONFORMANCE WITH ALL REQUIREMENTS OF THE BUILDING AUTHORITIES HAVING JURISDICTION OVER THIS TYPE OF CONSTRUCTION AND OCCUPANCY. THE G.C. SHALL NOTIFY THE ARCHITECT/ENGINEERS OF RECORD IMMEDIATELY IF ANY DISCREPANCIES ARE ENCOUNTERED BETWEEN THE DRAWINGS AND THESE REQUIREMENTS. ANY DISCREPANCIES WILL BE RESOLVED BY ARCHITECT / ENGINEER OF RECORD PRIOR TO PROCEEDING WITH THE WORK.
14. THE GENERAL CONTRACTOR SHALL PROVIDE THE ARCHITECT WITH RED-LINE AS-BUILT DRAWINGS FOR ALL FIELD CHANGES/ADDITIONS TO THE WORK INCLUDED IN THE WORK.
15. THE GENERAL CONTRACTOR SHALL PROVIDE AN ITEMIZED COST BREAKDOWN OF ALL ITEMS AND PHASES OF CONSTRUCTION AT THE TIME OF BIDDING.
16. 3DESIGN, Inc. IS NOT RESPONSIBLE FOR CONSTRUCTION MEANS, METHODS, SEQUENCES, PROCEDURES, PRECAUTIONS, OR PROGRAMS RELATED TO THIS PROJECT'S CONSTRUCTION.
17. ALL WORK IS TO BE PLUM, LINE, SQUARE, AND ADEQUATELY SUPPORTED. FILL ALL VOIDS BETWEEN COMPONENTS. ALL ITEMS THAT DO NOT MEET 3DESIGN, Inc. SATISFACTION AS TO GOOD TRADE PRACTICES AND QUALITY CRAFTMANSHIP WILL BE REDONE AT THE G.C.'S EXPENSE.
18. THE GENERAL CONTRACTOR IS TO MAINTAIN A SAFE SITE, CLEAR OF DEBRIS AT ALL TIMES.
19. THE GENERAL CONTRACTOR AND ALL SUBCONTRACTORS ARE TO GUARANTEE THEIR WORK FOR A MINIMUM PERIOD OF ONE YEAR IN WRITING SUBMITTED WITH THE BID.
20. ALL DETAILS AND SECTIONS SHOWN ON THESE DRAWINGS ARE INTENDED TO BE TYPICAL AND SHALL BE CONSTRUTED TO APPLY TO ANY SIMILAR SITUATION ELSEWHERE IN THE WORK EXCEPT WHERE A DIFFERENT DETAIL IS SHOWN. IT IS THE G.C.'S RESPONSIBILITY TO FORSEE ADDITIONAL CONDITIONS PRIOR TO COMMENCING THE WORK AND NOTIFY THE ARCHITECT IMMEDIATELY.
21. ALL ASSEMBLIES REFERRED TO AS FIRE-RATED SHALL BE A MINIMUM OF ONE HOUR UNLESS OTHERWISE INDICATED. ALL PENETRATIONS THROUGH ANY RATED ASSEMBLY SHALL BE PROVIDED W/ APPROVED PENETRATION RATED DEVICES.
22. THE GENERAL CONTRACTOR SHALL PROVIDE CUSTOM AND MULTI-COLOR PAINT SELECTIONS FOR OWNER'S APPROVAL.
23. ALL HARDWARE, LIGHTING & BATHROOM FIXTURES AND MISC. SPECIFICATIONS NOT SPECIFICALLY CALLED OUT ON THE DRAWINGS SHALL BE PROVIDED BY THE OWNER.
24. THE GENERAL CONTRACTOR SHALL PROVIDE SHOP DRAWINGS FOR TRUSSES, STORM SHUTTERS, REINFORCING STEEL, WINDOWS, DOORS, CAST CONCRETE, ORNAMENTAL IRON, STEEL CONNECTORS, ORNAMENTAL WOOD, ETC. TO THE ARCHITECT FOR REVIEW PRIOR TO COMMENCING THE WORK.
25. THE GENERAL CONTRACTOR SHALL PROVIDE A TELEPHONE AND TELEPHONE LINE AT THE JOB SITE. THE G.C. IS RESPONSIBLE FOR IT'S USE.

BURGLARY/SECURITY NOTES

1. ALL LOCKS ON EXTERIOR DOORS AND DOORS CONNECTING GARAGE AREAS SHALL BE CAPABLE OF RESISTING A FORCE OF 300 POUNDS APPLIED IN ANY MOVABLE DIRECTION AND IN ACCORDANCE WITH RESISTANCE STANDARDS SET FORTH IN 3601.2 (F.B.C.)

2. ALL SINGLE EXTERIOR SWING DOORS SHALL HAVE A LOCK TO BE KEY OPERATED FROM EXTERIOR WITH A MINIMUM OF 6000 POSSIBLE KEY CHANGES OR LOCKING AUXILIARY SINGLE DEAD BOLT (MIN. 1 INCH THROW) WITH HARDENED BOLT INSERTS.

3. THE ACTIVE LEAF OF PAIRS OF EXTERIOR SWING DOORS SHALL HAVE SAME LOCKS AS REQUIRED FOR SINGLE EXTERIOR SWING DOORS. THE INACTIVE LEAF OF THESE PAIRS OF DOORS SHALL HAVE MULTIPLE POINT LOCKS WITH 5/8 INCH MINIMUM THROW BOLTS WITH INSERTS.

4. SLIDING GLASS DOORS SHALL BE PROVIDED WITH SLIDING DOOR DEAD BOLTS OR A BOLT OR PIN NOT REMOVABLE OR OPERABLE FROM EXTERIOR, AT THE JAMB, HEAD, SILL OR AT MEETING MULLIONS. THESE DOORS SHALL BE REINFORCED IN THE STRIKE AND LOCK AREA TO MAINTAIN BOLT STRENGTH EFFECTIVENESS, IF NECESSARY, AND SUCH DOORS SHALL HAVE NO SCREWS REMOVABLE FROM OUTSIDE WHICH WOULD FACILITATE READY ENTRY FROM OUTSIDE.

5. JAMBS SHALL BE PROVIDED WITH APPROVED REINFORCED STRIKES INSTALLED WITH SCREWS AT LEAST 3" IN LENGHT AND PENETRATING SUB-BUCKS AT LEAST 1"

6. HINGES ON EXTERIOR OUT SWINGING DOORS SHALL HAVE NON-REMOVABLE PINS.

7. JAMBS OF ALL EXTERIOR OFFSET TYPE IN-SWING(ING) DOORS BE RABBETED, OR OF SIMILAR FABRICATION, TO PREVENT DEFEATING THE PURPOSE OF THE STRIKE AND THE INTEGRITY OF LOCKS AND LATCHES.

8. SINGLE, SWINGING, EXTERIOR DOORS, IF WOOD SHALL BE SOLID CORE OF NOT LESS THAN 1 3/8 INCHES THICK.

9. GLASS AND EXTERIOR DOORS SHALL COMPLY WITH THE AMERICAN NATIONAL STANDARDS INSTITUTE'S STANDARD 297.1

10. VISION PANELS IN EXTERIOR DOORS OTHER THAN GLAZING WITHIN 40 INCHES OF INSIDE LOCKING ACTIVATING DEVICE OF LOOSE AND SWINGING DOORS SHALL COMPLY WITH AMERICAN NATIONAL STANDARDS INSTITUTE STANDARD 297.1.

11. SLIDING GLASS DOORS AND WINDOWS SHALL BE INSTALLED AND CONSTRUCTED SO THAT NO PANEL CAN BE LIFTED FROM THE TRACKS WHEN IN THE LOCKED POSITION AND SO AS TO COMPLY WITH THE ARCHITECTURAL ALUMINUM MFGS. ASSOC. STANDARDS FOR FORCED ENTRY RESISTANCE, AAMA 1303.3.

12. LOCKS IN EXTERIOR WINDOWS SHALL CUMPLY WITH SECTION 3104 (F.B.C.)

13. FRONT MAIN ENTRANCE DOORS SHALL BE PROVIDED WITH A DOOR SCOPE OR VISION PANELS.

FLOOD PROGRAM LEGEND:

for Compliance with Chapter 11c of the Dade County Code
N.G.V.D.(MSL 1929)

Site to be filled to County flood criteria elevation N.G.V.D. or an elevation no less than the highest approved crown elevation of the road abutting the property.

Area adjacent to lake or canal to be graded so as to prevent direct overland discharge of stormwater into lake or canal.

Lot will be graded so as to prevent direct overland discharge of stormwater onto adjacent property.
Applicant will provide certification prior to final inspection.

PROCESS:	ADDRESS 1529 JEFFERSON AVE		
FOLIO:			
LOT	HIGHEST CROWN OF ROAD		
ELEVATION	LOWEST FLOOR	GARAGE/STORAGE	ADJACENT GRADE
EXISTING	7.42'	N.A	4.20'
PROPOSED	8.00'	N.A	4.20'
REQUIRED	8.00'	N\A	N\A

Tie-Beam Elevation Certificate, is required before making any inspection above lowest floor and a Final Elevation Certificate is required before issuance of certificate of occupancy or completion (Completion HOLD 186) (11c3-3d3) Call 375-6685

O.S.F.H.- (Outside Special Flood Hazard). All Electrical and Mechanical equipment must be located at or above the Required Lowest Floor Elevation.
S.F.H.- (Special Flood Hazard). All Electrical and Mechanical equipment must be located at or above the Base Flood Elevation or Required Lowest Floor Elevation

Lowest Floor- Shall mean the lowest floor of the lowest enclosed area (including basement). An unfinished or flood-resistant enclosure, usable for parking of vehicles, building access or storage in an area other than a basement area, is not considered a building's lowest floor; provided that such enclosure is not built as to render the structure in violation of the applicable non-elevation design requirements in Sections 11c-3, 11c-4, 11c-5. which ever is higher.

Garage or Storage (SFHA, OSHA(11c-5-f)) Fully encloses areas below the Base Flood Elevations shall be design to preclude finished living space except allowable uses i.e. parking, limited storage and building access and shall be design to allow for the entry and exit of flood-waters to automatically equalize hydrostatic flood forces on exterior walls. Design must be complying with this requirement must be either certified by a professional engineer or achitect and meet the following criteria:

(1) Provide a minimum of two(2) openings having a total net area of no less than 60 sq. in. ea. Bottom of all opening shall be no higher than one(1) foot above grade.

(2) The interior portion of such enclosed area shall NOT be partitioned or finished (flood resistant materials only) into separate rooms or air-conditioned.

Adjacent Grade 11c2-Z- "Shall mean the highest elevation of the ground surface next to the proposed walls of the structure". 11c2-GG-"Minimum finished grade shall mean the elevation established in Dade County Flood Criterior Map at a specific developement site or crown of road elevation of an existing adjacent road, whichever is higher"(or a waiver must be obtain). Site grading must be provided in a manner as to retain stormwater run-off into lakes or canals.

TERMITE PROTECTION NOTES

TERMITE PROTECTION. TERMITE PROTECTION SHALL BE PROVIDED BY REGISTERED TERMITICIDES OR OTHER APPROVED METHODS OF TERMITE PROTECTION LABELED FOR USE AS A PREVENTATIVE TREATMENT TO NEW CONSTRUCTION.

IF SOIL TREATMENT IS USED FOR SUBTERRANEAN TERMITE PREVENTION, THE INITIAL CHEMICAL SOIL TREATMENT INSIDE THE FOUNDATION PERIMETER SHALL BE DONE AFTER ALL EXCAVATION, BACKFILLING AND COMPACTION IS COMPLETE.

IF SOIL TREATMENT IS USED FOR SUBTERRANEAN TERMITE PREVENTION, SOIL AREA DISTURBED AFTER INITIAL CHEMICAL SOIL TREATMENT SHALL BE RETREATED WITH A CHEMICAL SOIL TREATMENT, INCLUDING SPACES BOXED OR FORMED.

IF SOIL TREATMENT IS USED FOR SUBTERRANEAN TERMITE PREVENTION, SPACE IN CONCRETE FLOORS BOXED OUT OR FORMED FOR THE SUBSEQUENT INSTALLATION OF PLUMBING TRAPS, DRAINS OR ANY OTHER PURPOSE SHALL BE CREATED BY USING PLASTIC OR METAL PERMANENTLY PLACED FORMS OF SUFFICIENT DEPTH TO ELIMINATE ANY PLANNED SOIL DISTURBANCE AFTER INITIAL CHEMICAL SOIL TREATMENT.

IF SOIL TREATMENT IS USED FOR SUBTERRANEAN TERMITE PREVENTION, CHEMICALLY TREATED SOIL SHALL BE PROTECTED WITH
A MINIMUM 6 MIL VAPOR RETARDER TO PROTECT AGAINST RAINFALL DILUTION. IF RAINFALL OCCURS BEFORE VAPOR RETARDER PLACEMENT, RETREATMENT IS REQUIRED. ANY WORK, INCLUDING PLACE- MENT OF REINFORCING STEEL, DONE AFTER CHEMICAL TREATMENT UNTIL THE CONCRETE FLOOR IS POURED, SHALL BE DONE IN SUCH MANNER AS TO AVOID PENETRATING OR DISTUBING TREATED SOIL.

IF SOIL TREATMENT IS USED FOR SUBTERRANEAN TERMITE PREVENTION, CONCRETE OVERPOUR OR MORTAR ACCUMULATED ALONG THE EXTERIOR FOUNDATION PERIMETER SHALL BE REMOVED PRIOR TO EXTERIOR CHEMICAL SOIL TREATMENT, TO ENHANCE VERTICAL PENETRATION OF THE CHEMICALS.

IF SOIL TREATMENT IS USED FOR SUBTERRANEAN TERMITE PREVENTION, CHEMICAL SOIL TREATMENTS SHALL ALSO BE APPLIED UNDER ALL EXTERIOR CONCRETE OR GRADE WITHIN 1 FOOT (305 MM) OF THE PRIMARY STRUCTURE SIDEWALLS. ALSO, A VERTICAL CHEMICAL BARRIER SHALL BE APPLIED PROMPTLY AFTER CONSTRUCTION IS COMPLETED, INCLUDING INITIAL LANDSCAPING AND IRRIGATION/SPRINKLER INSTALLATION. ANY SOIL DISTURBED AFTER THE CHEMICAL VERTICAL BARRIER IS APPLIED SHALL BE PROMPTLY RETREATED.

TERMITE PROTECTION. ALL BUILDINGS SHALL HAVE PRECONSTRUCTION TREATMENT PROTECTION AGAINST SUBTERRANEAN TERMITES. THE RULES AND LAWS AS ESTABLISHED BY THE FLORIDA DEPARTMENT OF AGRICULTURE AND CONSUMER SERVICES SHALL BE DEEMED AS APPROVED WITH RESPECT TO PRE-CONSTRUCTION SOIL TREATMENT FOR PROTECTION AGAINST SUBTERRANEAN TERMITES. A CERTIFICATE OF COMPLIANCE SHALL BE ISSUED TO THE BUILDING DEPARTMENT BY THE LICENSED PEST CONTROL COMPANY THAT CONTAINS THE FOLLOWING STATEMENT:
"THE BUILDING HAS RECEIVED A COMPLETE TREATMENT FOR THE PREVENTION OF SUBTERRANEAN TERMITES. TREATMENT IS IN ACCORDANCE WITH RULES AND LAWS ESTABLISHED BY THE FLORIDA DEPARTMENT OF AGRICULTURE AND CONSUMER SERVICES."

PENETRATION. PROTECTIVE SLEEVES AROUND METALLIC PIPING PENETRATING CONCRETE SLAB-ON-GRADE FLOORS SHALL NOT BE OF CELLULOSE-CONTAINING MATERIALS AND SHALL RECEIVE APPLICATION OF A TERMITICIDE IN ANNULAR SPACE BETWEEN SLEEVE AND PIPE.

SIXTEENTH

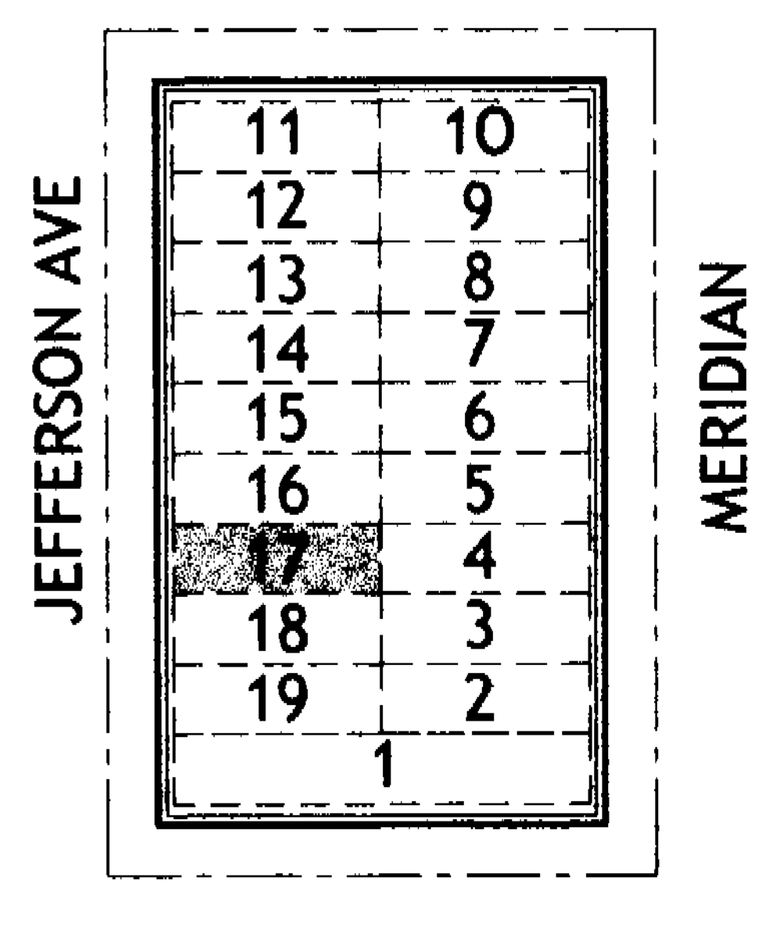

LOCATION PLAN

SCALE: N.T.S

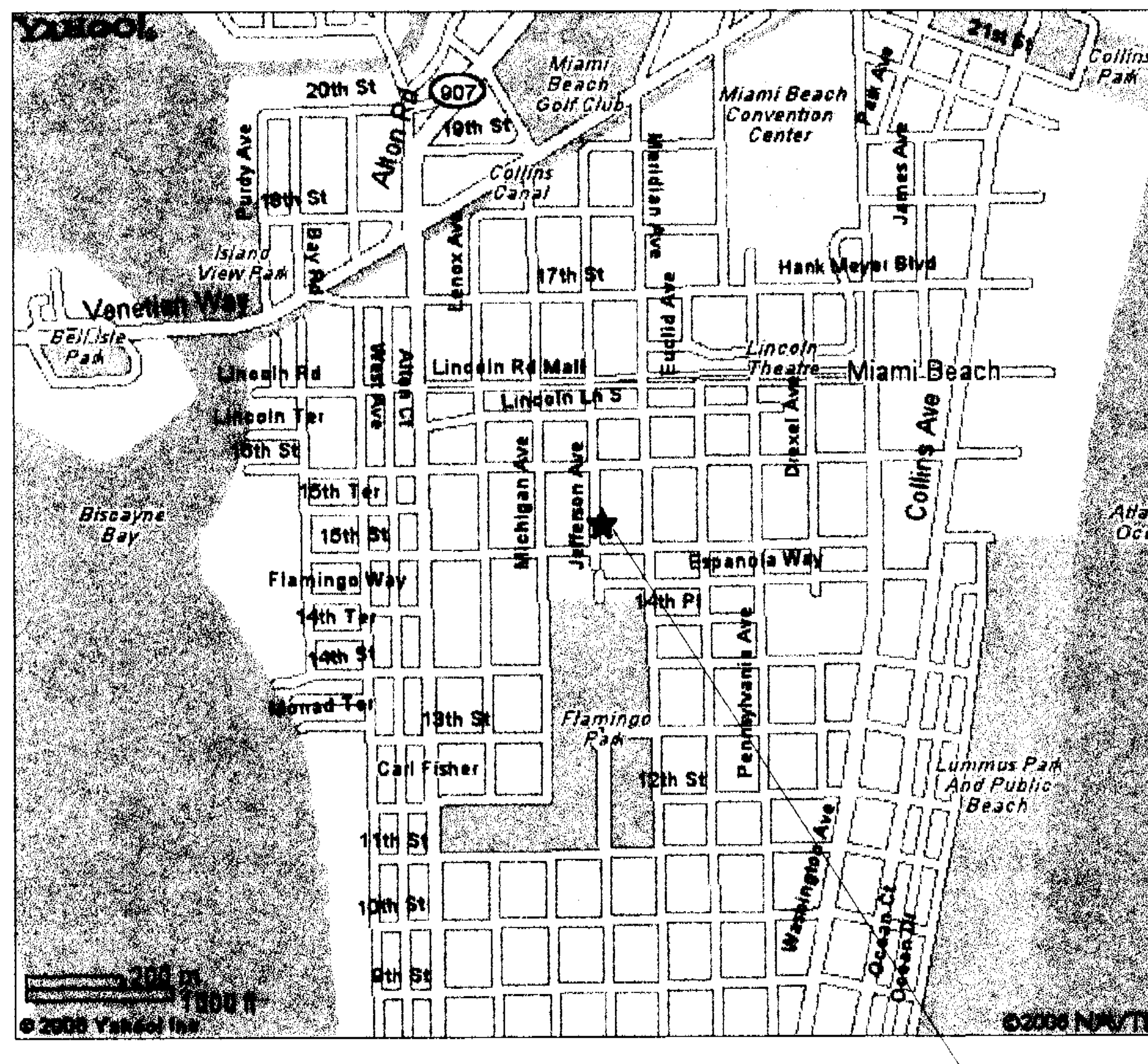

LOCATION MAP

SCALE: N.T.S

ZONING DATA:

LEGAL DESCRIPTION

LOT 17, BLOCK 62, ,OF LINCOLN SUBDIVISION, ACCORDING TO THE PLAT THEREOF AS RECORDED IN PLAT BOOK 9, PAGE 69, OF THE PUBLIC RECORDS OF MIAMI-DADE COUNTY, FLORIDA.

SITE PLAN INFORMATION:

ZONING DESIGNATION:	RM-1
TOTAL SITE AREA:	0.17 ACRES (7,500 S.F.)
TYPE OF OCCUPANCY:	MULTI-FAMILY

SETBACKS

PEDESTAL

	ALLOWED	PROVIDED
FRONT	20'	15'-0" EXISTING
REAR	15'	15'-0"
NORTH SIDE	7'-6"	7'-6"
SOUTH SIDE	7'-6"	7'-6"

BALCONIES / ORNAMENTAL PROJECTIONS

		ALLOWED	PROVIDED
FRONT	N/A		
REAR	(25% OF 14')	3'-6"	3'-6"
NORTH SIDE	N/A		
SOUTH SIDE	N/A		

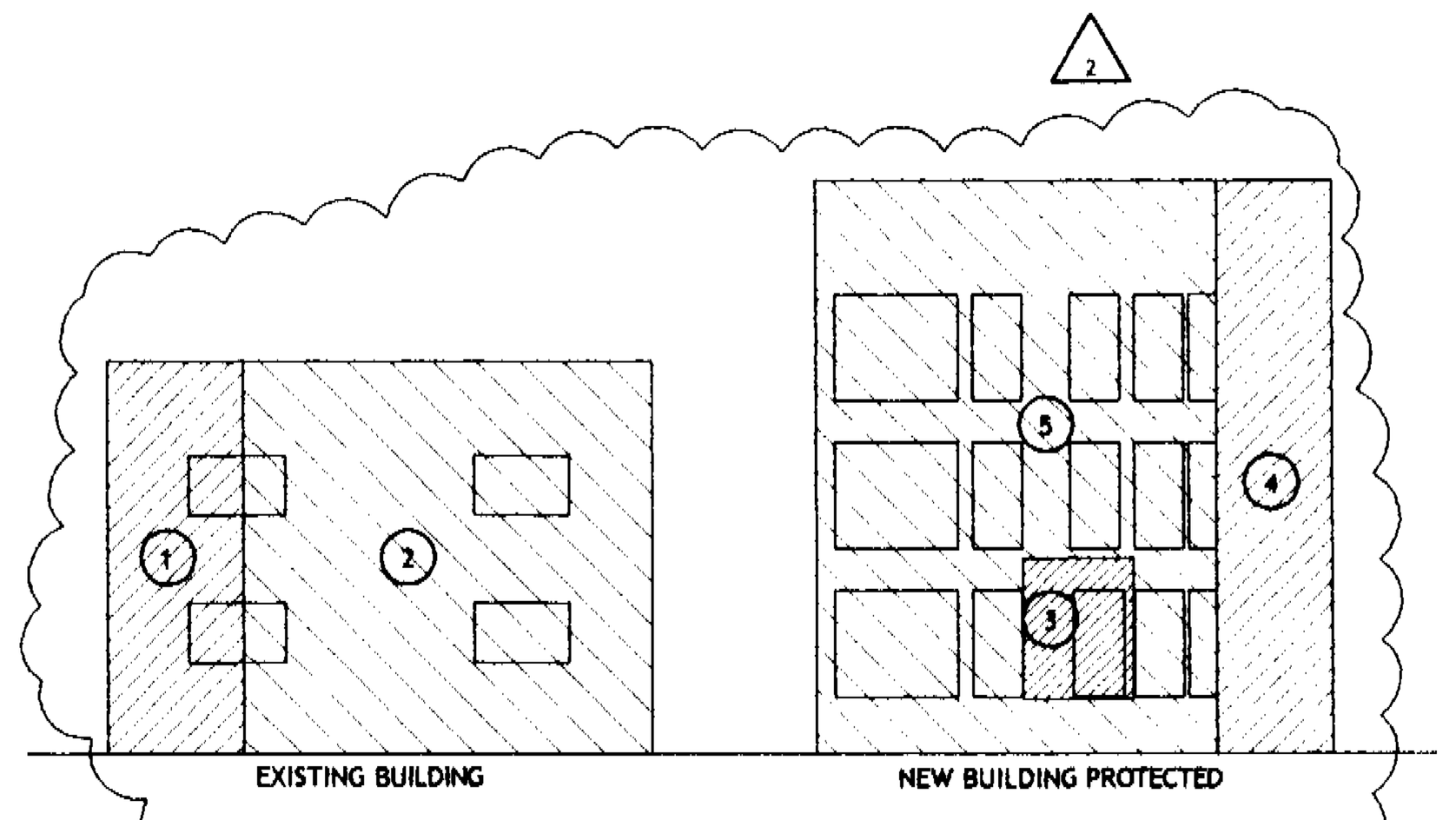

WALL OPENINGS AREAS

SCALE: N.T.S

NEW +UNIT TYPES AND COUNT:

2 UNITS (1 BED - 2 BATH)
4 UNITS (1 BED - 1-1/2 BATH)
6 UNITS TOTAL

NEW BUILDING AREA

LEVEL 1 ELEVATOR, STAIRS & LIVING	= 1981.95
LEVEL 2 STAIRS & LIVING	= 1904.58
LEVEL 3 STAIRS & LIVING	= 1904.58
LEVEL 4 ROOF TERRACE STAIRS	= 159.30
TOTAL FLOOR AREA	= 5,950.41 S.F.

BUILDING TYPE:

RESIDENCES TYPE V-B 1 HOUR UNPROTECTED SPRINKLERED

BUILDING HEIGHT

	ALLOWED	PROVIDED
	40'-0"	30'-8" TO TOP OF ROOF SLAB
# OF STORIES ABOVE GRADE	3 STORIES	3 STORIES

PARKING

	REQUIRED	PROVIDED
6 UNITS X 1.5 = 9 SPACES		
REGULAR	8	0
HANDICAPPED	1	0

AREA	EXTERIOR WALL OPENINGS:		WALL AREA	OPENINGS AREA	% ALLOWED	% PROVIDED
1	EXISTING BUILDING UNPROTECTED	FIRE SEPARATION 10 - 15 FT. BETWEEN OLD & NEW BLDG.	245 SF	29.6 SF	15 %	12.08 %
2	EXISTING BUILDING UNPROTECTED	FIRE SEPARATION 15 - 20 FT. BETWEEN OLD & NEW BLDG.	730 SF	74.3 SF	25 %	10.17 %
3	NEW BUILDING PROTECTED PROTECTED	FIRE SEPARATION 15 - 20 FT. BETWEEN OLD & NEW BLDG.	70.77 SF	24.12 SF	75 %	34.08 %
4	NEW BUILDING PROTECTED PROTECTED	FIRE SEPARATION 5 - 10 FT. BETWEEN OLD & NEW BLDG.	300 SF	0 SF	15 %	0 %
5	NEW BUILDING PROTECTED PROTECTED	FIRE SEPARATION 20 - 25 FT. BETWEEN OLD & NEW BLDG.	979.73 SF	414.39 SF	UNLIMITED	42.29 %

EXST'G UNIT TYPES AND COUNT:

2 UNITS (1 BED - 1 BATH)
2 UNITS (2 BED - 2 BATH)
4 UNITS TOTAL

EXISTING BUILDING AREA

LEVEL 1 LIVING & STAIRS	= 1,672
LEVEL 2 LIVING & STAIRS	= 1,672
TOTAL FLOOR AREA	= 3,344 S.F.
NET SITE AREA	7,500 S.F.

	ALLOWED 1.25	PROVIDED
FLOOR AREA RATIO (SHADED AREA)	9,375 S.F.	9,294.41 S.F.

NEW UNIT AREAS		EXST'G UNIT AREAS	
TOTAL NUMBER OF UNITS	6	TOTAL NUMBER OF UNITS	4
UNIT 1	952.62 S.F.	UNIT 1	689.50 S.F.
UNIT 2	854.98 S.F.	UNIT 2	842.20 S.F.
UNIT 3	952.62 S.F.	UNIT 3	689.50 S.F.
UNIT 4	854.98 S.F.	UNIT 4	842.20 S.F.
UNIT 5	977.63 S.F.		
UNIT 6	928.49 S.F.		
TOTAL UNIT AREA	5,521.32 S.F.	TOTAL UNIT AREA	3,063.40 S.F.

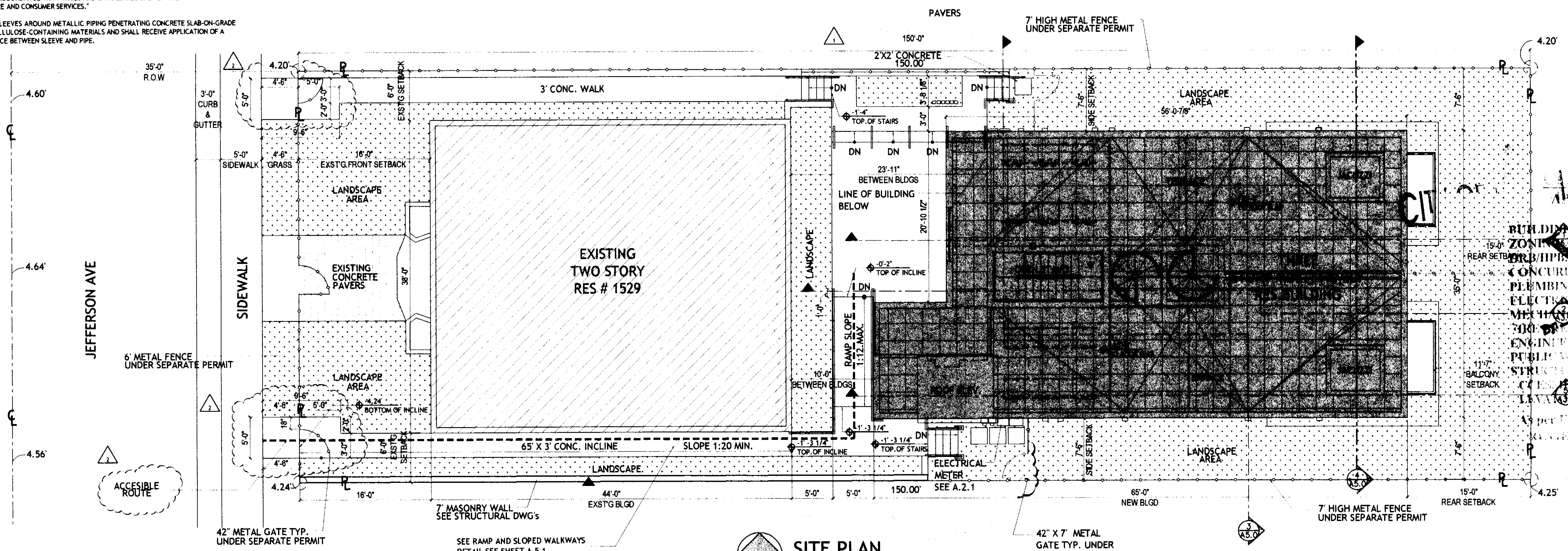

SITE PLAN

SCALE: 1/8" = 1'-0"

DRAWN BY:

REVISIONS:

2 01-31-07
1 10-13-06

3DESIGN, INC
ANTHONY LEON
AR0016752
ARCHITECTURE
4300 BISCAYNE BLVD. SUITE#G04 MIAMI, FL 33137 T.305.438.9377 F.305.438.9578

SEAL

NEW BUILDING FOR
1529 JEFFERSON AVE
MIAMI BEACH, FL
33139

A-1.0

JUNE 6, 2006

GENERAL NOTES

1. THESE DOCUMENTS, AS INSTRUMENTS OF SERVICE, ARE THE PROPERTY OF 3DESIGN, Inc. AND MAY NOT BE USED OR REPRODUCED IN ANY MANNER WITHOUT EXPRESSED WRITTEN CONSENT
2. IT IS NOT THE INTENT OF THESE PLANS TO SHOW EVERY MINOR DETAIL OF CONSTRUCTION. THE GENERAL CONTRACTOR IS EXPECTED TO FURNISH AND INSTALL ALL ITEMS REQUIRED TO COMPLETE ALL BUILDING SYSTEMS AND PROVIDE ALL NECESSARY APPURTENANCES FOR EQUIPMENT TO BE PLACED IN PROPER WORKING ORDER WITH QUALITY CRAFTMANSHIP WITHOUT INCREASING THE CONTRACT SUM OR CONTRACT COMPLETION DATE.
3. ALL WORK DESCRIBED BY THSE DOCUMENTS MUST BE PERFORMED BY CONSTRUCTION PROFESSIONALS LICENCED & INSURED IN THE STATE OF FLORIDA (F.B.C. REQUIRED). ALL WORK SHALL BE PERFORMED IN ACCORDANCE W/ THE NATIONAL ELECTRIC CODE AND F.B.C.
4. THE GENERAL CONTRACTOR SHALL VERIFY ALL CONDITIONS AND DIMENSIONS AT THE JOB SITE PRIOR TO COMMENCING THE WORK. IF THERE ANY DISCREPANCIES BETWEEN THESE DRAWINGS AND FIELD CONDITIONS, THE CONTRACTOR SHALL NOTIFY THE ARCHITECT PRIOR TO COMMENCING THE WORK FOR CLEAR INSTRUCTION.
5. DO NOT SCALE THE DRAWINGS. REFER TO FIGURED DIMENSIONS.
6. THE CONTRACTOR IS TO ACQUIRE ALL REQUIRED PERMITS FOR THE DEMOLITION, CONSTRUCTION, FINISHING, AND OCCUPANCY OF THE PROJECT. ALL WORK SHALL BE PERFORMED IN ACCORDANCE WITH THE F.B.C., LATEST EDITION.
7. ALL WORK DONE UNDER THE SUPERVISION OF THE GENERAL CONTRACTOR SHALL BE IN A NEAT AND WORKMAN-LIKE MANNER IN ACCORDANCE WITH FEDERAL, STATE, AND LOCAL GOVERNING AGENCIES HAVING JURISDICTION.
8. THE GENERAL CONTRACTOR IS TO PROVIDE, LOCATE AND BUILD INTO THE WORK ALL SUPPLEMENTARY MATERIALS (INSERTS, ANCHORS, ANGLES, PLATES, OPENINGS, SLEEVES, HANGERS, SLAB DEPRESSIONS, PITCHES, ETC.) AS REQUIRED TO PROPERLY INSTALL, SUPPORT, BRACE, AND SHORE ALL BUILDING COMPONENTS WITHIN THE SCOPE OF THE PROJECT.
9. THE GENERAL CONTRACTOR SHALL REPAIR ALL DAMAGES TO THE EXISTING BUILDING DURING CONSTRUCTION RESULTING FROM SUCH LACK OF CARE AND DUE DILIGENCE AND MAY NOT CLAIM MONETARY DAMAGES OR TIME DELAYS AGAINST THE CONTRACT SUM OR CONTRACT COMPLETION DATE.
10. THE GENERAL CONTRACTOR SHALL COORDINATE AND SCHEDULE THE WORK OF ALL TRADES TO INSURE THAT THE PROJECT IS COMPLETED BY THE CONTRACT COMPLETION DATE.
11. PRIOR TO COMMENCING WORK, THE GENERAL CONTRACTOR SHALL SITE VERIFY THE LOCATION OF ALL EQUIPMENT TO BE REMOVED/RELOCATED. REMOVALS SHALL BE COORDINATED WITH THE OWNER. IF SO DIRECTED, THE G.C. MAY INCLUDE ANY ADDITIONAL COSTS TO THE BID.
12. THE GENERAL CONTRACTOR SHALL PROVIDE AN ONSITE DUMPSTER IN A LOCATION COORDINATED WITH THE OWNER FOR THE DISPOSAL OF REMOVED MATERIAL /CONSTRUCTION DEBRIS. THE DUMPSTER SHALL BE EMPTIED AT APPROPRIATE INTERVALS TO PREVENT OVERFLOW AND UNSIGHTLY CONDITIONS.
13. IT IS THE INTENT OF 3DESIGN, Inc. THAT THIS WORK BE IN CONFORMANCE WITH ALL REQUIREMENTS OF THE BUILDING AUTHORITIES HAVING JURISDICTION OVER THIS TYPE OF CONSTRUCTION AND OCCUPANCY. THE G.C. SHALL NOTIFY THE ARCHITECT/ENGINEERS OF RECORD IMMEDIATELY IF ANY DISCREPANCIES ARE ENCOUNTERED BETWEEN THE DRAWINGS AND THESE REQUIREMENTS. ANY DISCREPANCIES WILL BE RESOLVED BY ARCHITECT / ENGINEER OF RECORD PRIOR TO PROCEEDING WITH THE WORK.
14. THE GENERAL CONTRACTOR SHALL PROVIDE THE ARCHITECT WITH RED-LINE AS-BUILT DRAWINGS FOR ALL FIELD CHANGES/ADDITIONS TO THE WORK INCLUDED IN THE WORK.
15. THE GENERAL CONTRACTOR SHALL PROVIDE AN ITEMIZED COST BREAKDOWN OF ALL ITEMS AND PHASES OF CONSTRUCTION AT THE TIME OF BIDDING.
16. 3DESIGN, Inc. IS NOT RESPONSIBLE FOR CONSTRUCTION MEANS, METHODS, SEQUENCES, PROCEDURES, PRECAUTIONS, OR PROGRAMS RELATED TO THIS PROJECTS CONSTRUCTION.
17. ALL WORK IS TO BE PLUM, LINE, SQUARE, AND ADEQUATELY SUPPORTED. FILL ALL VOIDS BETWEEN COMPONENTS. ALL ITEMS THAT DO NOT MEET 3DESIGN, Inc. SATISFACTION AS TO GOOD TRADE PRACTICES AND QUALITY CRAFTMANSHIP WILL BE REDONE AT THE G.C.'S EXPENSE.
18. THE GENERAL CONTRACTOR IS TO MAINTAIN A SAFE SITE, CLEAR OF DEBRIS AT ALL TIMES.
19. THE GENERAL CONTRACTOR AND ALL SUBCONTRACTORS ARE TO GUARANTEE THEIR WORK FOR A MINIMUM PERIOD OF ONE YEAR IN WRITING SUBMITTED WITH THE BID.
20. ALL DETAILS AND SECTIONS SHOWN ON THESE DRAWINGS ARE INTENDED TO BE TYPICAL AND SHALL BE CONSTRUED TO APPLY TO ANY SIMILAR SITUATION ELSEWHERE IN THE WORK EXCEPT WHERE A DIFFERENT DETAIL IS SHOWN. IT IS THE G.C.'S RESPONSIBILITY TO FORSEE ADDITIONAL CONDITIONS PRIOR TO COMMENCING THE WORK AND NOTIFY THE ARCHITECT IMMEDIATELY.
21. ALL ASSEMBLIES REFERRED TO AS FIRE-RATED SHALL BE A MINIMUM OF ONE HOUR UNLESS OTHERWISE INDICATED. ALL PENETRATIONS THROUGH ANY RATED ASSEMBLY SHALL BE PROVIDED W/ APPROVED PENETRATION RATED DEVICES.
22. THE GENERAL CONTRACTOR SHALL PROVIDE CUSTOM AND MULTI-COLOR PAINT SELECTIONS FOR OWNER'S APPROVAL.
23. ALL HARDWARE, LIGHTING & BATHROOM FIXTURES AND MISC. SPECIFICATIONS NOT SPECIFICALLY CALLED OUT ON THE DRAWINGS SHALL BE PROVIDED BY THE OWNER.
24. THE GENERAL CONTRACTOR SHALL PROVIDE SHOP DRAWINGS FOR TRUSSES, STORM SHUTTERS, REINFORCING STEEL, WINDOWS, DOORS, CAST CONCRETE, ORNAMENTAL IRON, STEEL CONNECTORS, ORNAMENTAL WOOD, ETC. TO THE ARCHITECT FOR REVIEW PRIOR TO COMMENCING THE WORK.
25. THE GENERAL CONTRACTOR SHALL PROVIDE A TELEPHONE AND TELEPHONE LINE AT THE JOB SITE. THE G.C. IS RESPONSIBLE FOR IT'S USE.

FLOOD PROGRAM LEGEND:

for Compliance with Chapter 11c of the Dade County Code

N.G.V.D.(MSL 1929)

Site to be filled to County flood criteria elevation N.G.V.D. or an elevation no less than the highest approved crown elevation of the road abutting the property.

Area adjacent to lake or canal to be graded so as to prevent direct overland discharge of stormwater into lake or canal.

Lot will be graded so as to prevent direct overland discharge of stormwater onto adjacent property.
Applicant will provide certification prior to final inspection.

PROCESS: ADDRESS 1529 JEFFERSON AVE
FOLIO:
LOT HIGHEST CROWN OF ROAD

ELEVATION	LOWEST FLOOR	GARAGE/STORAGE	ADJACENT GRADE
EXISTING	7.42'	N.A	4.20'
PROPOSED	8.00'	N.A	4.20'
REQUIRED	8.00'	N.A	N.A

Tie-Beam Elevation Certificate, is required before making any inspection above lowest floor and a Final Elevation Certificate is required before issuance of certificate of occupancy or completion (Completion HOLD 186) (11c3-3d3) Call 375-6685

O.S.F.H. - (Outside Special Flood Hazard). All Electrical and Mechanical equipment must be located at or above the Required Lowest Floor Elevation.
S.F.H. - (Special Flood Hazard). All Electrical and Mechanical equipment must be located at or above the Base Flood Elevation or Required Lowest Floor Elevation

Lowest Floor- Shall mean the lowest floor of the lowest enclosed area (including basement). An unfinished or flood-resistant enclosure, usable for parking of vehicles, building access or storage in an area other than a basement area, is not considered a building's lowest floor; provided that such enclosure is not built as to render the structure in violation of the applicable non-elevation design requirements in Sections 11c-3, 11c-4, 11c-5, which ever is higher.

Garage or Storage (SFHA, OSHA(11c-5-f)) Fully encloses areas below the Base Flood Elevations shall be design to preclude finished living space except allowable uses i.e. parking, limited storage and building access and shall be design to allow for the entry and exit of flood-waters to automatically equalize hydrostatic flood forces on exterior walls. Design must be complying with this requirement must be either certified by a professional engineer or architect and meet the following criteria:

(1) Provide a minimum of two(2) openings having a total net area of no less than 60 sq. in. ea. Bottom of all opening shall be no higher than one(1) foot above grade.

(2) The interior portion of such enclosed area shall NOT be partitioned or finished (flood resistant materials only) into separate rooms or air-conditioned.

Adjacent Grade 11c2-Z- "Shall mean the highest elevation of the ground surface next to the proposed walls of the structure". 11c2-GG-"Minimum finished grade shall mean the elevation established in Dade County Flood Criteria Map at a specific developement site or crown of road elevation of an existing adjacent road, whichever is higher"(or a waiver must be obtain). Site grading must be provided in a manner as to retain stormwater run-off into lakes or canals.

TERMITE PROTECTION NOTES

TERMITE PROTECTION. TERMITE PROTECTION SHALL BE PROVIDED BY REGISTERED TERMITICIDES OR OTHER APPROVED METHODS OF TERMITE PROTECTION LABELED FOR USE AS A PREVENTATIVE TREATMENT TO NEW CONSTRUCTION.

IF SOIL TREATMENT IS USED FOR SUBTERRANEAN TERMITE PREVENTION, THE INITIAL CHEMICAL SOIL TREATMENT INSIDE THE FOUNDATION PERIMETER SHALL BE DONE AFTER ALL EXCAVATION, BACKFILLING AND COMPACTION IS COMPLETE.

IF SOIL TREATMENT IS USED FOR SUBTERRANEAN TERMITE PREVENTION, SOIL AREA DISTURBED AFTER INITIAL CHEMICAL SOIL TREATMENT SHALL BE RETREATED WITH A CHEMICAL SOIL TREATMENT, INCLUDING SPACES BOXED OR FORMED.

IF SOIL TREATMENT IS USED FOR SUBTERRANEAN TERMITE PREVENTION, SPACE IN CONCRETE FLOORS BOXED OUT OR FORMED FOR THE SUBSEQUENT INSTALLATION OF PLUMBING TRAPS, DRAINS OR ANY OTHER PURPOSE SHALL BE CREATED BY USING PLASTIC OR METAL PERMANENTLY PLACED FORMS OF SUFFICIENT DEPTH TO ELIMINATE ANY PLANNED SOIL DISTURBANCE AFTER INITIAL CHEMICAL SOIL TREATMENT.

IF SOIL TREATMENT IS USED FOR SUBTERRANEAN TERMITE PREVENTION, CHEMICALLY TREATED SOIL SHALL BE PROTECTED WITH
A MINIMUM 6 MIL VAPOR RETARDER TO PROTECT AGAINST RAINFALL DILUTION. IF RAINFALL OCCURS BEFORE CONCRETE IS PLACED, TREATMENT IS REQUIRED. ANY WORK, INCLUDING PLACE- MENT OF REINFORCING STEEL, DONE AFTER CHEMICAL TREATMENT UNTIL THE CONCRETE FLOOR IS POURED, SHALL BE DONE IN SUCH MANNER AS TO AVOID PENETRATING OR DISTUBING TREATED SOIL.

IF SOIL TREATMENT IS USED FOR SUBTERRANEAN TERMITE PREVENTION, CONCRETE OVERPOUR OR MORTAR ACCUMULATED ALONG THE EXTERIOR FOUNDATION PERIMETER SHALL BE REMOVED PRIOR TO EXTERIOR CHEMICAL SOIL TREATMENT, TO ENHANCE VERTICAL PENETRATION OF THE CHEMICALS.

IF SOIL TREATMENT IS USED FOR SUBTERRANEAN TERMITE PREVENTION, CHEMICAL SOIL TREATMENTS SHALL ALSO BE APPLIED UNDER ALL EXTERIOR CONCRETE OR GRADE WITHIN 1 FOOT (305 MM) OF THE PRIMARY STRUCTURE SIDEWALLS. ALSO, A VERTICAL CHEMICAL BARRIER SHALL BE APPLIED PROMPTLY AFTER CONSTRUCTION IS COMPLETED, INCLUDING INITIAL LANDSCAPING AND IRRIGATION/SPRINKLER INSTALLATION. ANY SOIL DISTURBED AFTER THE CHEMICAL VERTICAL BARRIER IS APPLIED SHALL BE PROMPTLY RETREATED.

TERMITE PROTECTION. ALL BUILDINGS SHALL HAVE PRECONSTRUCTION TREATMENT PROTECTION AGAINST SUBTERRANEAN TERMITES. THE RULES AND LAWS AS ESTABLISHED BY THE FLORIDA DEPARTMENT OF AGRICULTURE AND CONSUMER SERVICES SHALL BE DEEMED AS APPROVED WITH RESPECT TO PRE-CONSTRUCTION SOIL TREATMENT FOR PROTECTION AGAINST SUBTERRANEAN TERMITES. A CERTIFICATE OF COMPLIANCE SHALL BE ISSUED TO THE BUILDING DEPARTMENT BY THE LICENSED PEST CONTROL COMPANY THAT CONTAINS THE FOLLOWING STATEMENT:
"THE BUILDING HAS RECEIVED A COMPLETE TREATMENT FOR THE PREVENTION OF SUBTERRANEAN TERMITES. TREATMENT IS IN ACCORDANCE WITH RULES AND LAWS ESTABLISHED BY THE FLORIDA DEPARTMENT OF AGRICULTURE AND CONSUMER SERVICES."

PENETRATION. PROTECTIVE SLEEVES AROUND METALLIC PIPING PENETRATING CONCRETE SLAB-ON-GRADE FLOORS SHALL NOT BE OF CELLULOSE-CONTAINING MATERIALS AND SHALL RECEIVE APPLICATION OF A TERMITICIDE IN ANNULAR SPACE BETWEEN SLEEVE AND PIPE.

BURGLARY/SECURITY NOTES

1. ALL LOCKS ON EXTERIOR DOORS AND DOORS CONNECTING GARAGE AREAS SHALL BE CAPABLE OF RESISTING A FORCE OF 300 POUNDS APPLIED IN ANY MOVABLE DIRECTION AND IN ACCORDANCE WITH RESISTANCE STANDARDS SET FORTH IN 3601.2 (F.B.C.)

2. ALL SINGLE EXTERIOR SWING DOORS SHALL HAVE A LOCK TO BE KEY OPERATED FROM EXTERIOR WITH A MINIMUM OF 6000 POSSIBLE KEY CHANGES OR LOCKING AUXILIARY SINGLE DEAD BOLT (MIN. 1 INCH THROW) WITH HARDENED BOLT INSERTS.

3. THE ACTIVE LEAF OF PAIRS OF EXTERIOR SWING DOORS SHALL HAVE SAME LOCKS AS REQUIRED FOR SINGLE EXTERIOR SWING DOORS. THE INACTIVE LEAF OF THESE PAIRS OF DOORS SHALL HAVE MULTIPLE POINT LOCKS WITH 5/8 INCH MINIMUM THROW BOLTS WITH INSERTS.

4. SLIDING GLASS DOORS SHALL BE PROVIDED WITH SLIDING DOOR DEAD BOLTS OR A BOLT OR PIN NOT REMOVABLE OR OPERABLE FROM EXTERIOR, AT THE JAMB, HEAD, SILL OR AT MEETING MULLIONS. THESE DOORS SHALL BE REINFORCED IN THE STRIKE AND LOCK AREA TO MAINTAIN BOLT STRENGTH EFFECTIVENESS, IF NECESSARY, AND SUCH DOORS SHALL HAVE NO SCREWS REMOVABLE FROM OUTSIDE WHICH WOULD FACILITATE READY ENTRY FROM OUTSIDE.

5. JAMBS SHALL BE PROVIDED WITH APPROVED REINFORCED STRIKES INSTALLED WITH SCREWS AT LEAST 3" IN LENGHT AND PENETRATING SUB-BUCKS AT LEAST 1"

6. HINGES ON EXTERIOR OUT SWINGING DOORS SHALL HAVE NON-REMOVABLE PINS.

7. JAMBS OF ALL EXTERIOR OFFSET TYPE IN-SWING(ING) DOORS BE RABBETED, OR OF SWILAR FABRICATION, TO PREVENT DEFEATING THE PURPOSE OF THE STRIKE AND THE INTEGRITY OF LOCKS AND LATCHES.

8. SINGLE, SWINGING, EXTERIOR DOORS, IF WOOD SHALL BE SOLID CORE OF NOT LESS THAN 1 3/8 INCHES THICK.

9. GLASS AND EXTERIOR DOORS SHALL COMPLY WITH THE AMERICAN NATIONAL STANDARDS INSTITUTE'S STANDARD 297.1

10. VISION PANELS IN EXTERIOR DOORS OTHER THAN GLAZING WITHIN 40 INCHES OF INSIDE LOCKING ACTIVATING DEVICE OF LOOSE AND SWINGING DOORS SHALL COMPLY WITH AMERICAN NATIONAL STANDARDS INSTITUTE STANDARD 297.1.

11. SLIDING GLASS DOORS AND WINDOWS SHALL BE INSTALLED AND CONSTRUCTED SO THAT NO PANEL CAN BE LIFTED FROM THE TRACKS WHEN IN THE LOCKED POSITION AND SO AS TO COMPLY WITH THE ARCHITECTURAL ALUMINUM MFGS. ASSOC. STANDARDS FOR FORCED ENTRY RESISTANCE, AAMA 1303.3.

12. LOCKS IN EXTERIOR WINDOWS SHALL COMPLY WITH SECTION 3104 (F.B.C.)

13. FRONT MAIN ENTRANCE DOORS SHALL BE PROVIDED WITH A DOOR SCOPE OR VISION PANELS.

SIXTEENTH

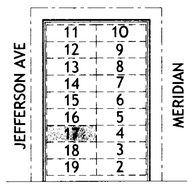

LOCATION PLAN
SCALE: N.T.S

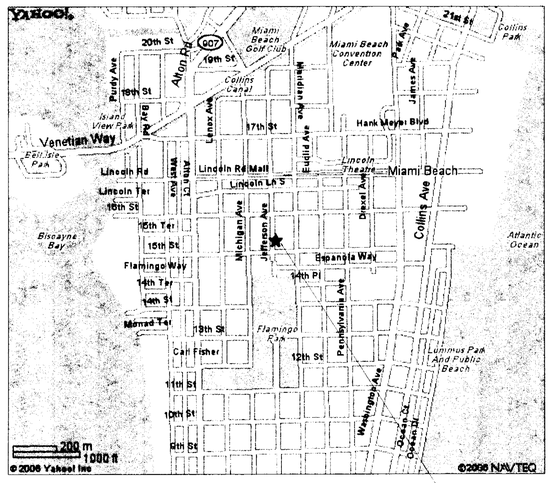

SUBJECT PROPERTY

LOCATION MAP
SCALE: N.T.S

ZONING DATA:

LEGAL DESCRIPTION

LOT 17, BLOCK 62, ,OF LINCOLN SUBDIVISION, ACCORDING TO THE PLAT THEREOF AS RECORDED IN PLAT BOOK 9, PAGE 69, OF THE PUBLIC RECORDS OF MIAMI-DADE COUNTY, FLORIDA.

SITE PLAN INFORMATION:

ZONING DESIGNATION: RM-1
TOTAL SITE AREA: 0.17 ACRES (7,500 S.F.)
TYPE OF OCCUPANCY: MULTI-FAMILY

SETBACKS

PEDESTAL	ALLOWED	PROVIDED
FRONT	20'	15'-0" EXISTING
REAR	15'	15'-0"
NORTH SIDE	7'-6"	7'-6"
SOUTH SIDE	7'-6"	7'-6"

BALCONIES / ORNAMENTAL PROJECTIONS		ALLOWED	PROVIDED
FRONT	N/A		
REAR	(25% OF 14')	3'-6"	3'-6"
NORTH SIDE	N/A		
SOUTH SIDE	N/A		

NEW +UNIT TYPES AND COUNT:

2 UNITS (1 BED - 2 BATH)
4 UNITS (1 BED - 1-1/2 BATH)
6 UNITS TOTAL

NEW BUILDING AREA

LEVEL 1 ELEVATOR, STAIRS & LIVING	= 1981.95
LEVEL 2 STAIRS & LIVING	= 1904.58
LEVEL 3 STAIRS & LIVING	= 1904.58
LEVEL 4 ROOF TERRACE STAIRS	= 159.30
TOTAL FLOOR AREA	= 5,950.41 S.F.

BUILDING TYPE:

RESIDENCES TYPE V-B 1 HOUR UNPROTECTED SPRINKLERED

BUILDING HEIGHT

	ALLOWED	PROVIDED
	40'-0"	30'-8" TO TOP OF ROOF SLAB
# OF STORIES ABOVE GRADE	3 STORIES	3 STORIES

PARKING

	REQUIRED	PROVIDED
6 UNITS X 1.5 = 9 SPACES		
REGULAR	8	0
HANDICAPPED	1	0

EXTERIOR WALL OPENINGS:			% ALLOWED	% PROVIDED
EXISTING BUILDING UNPROTECTED	FIRE SEPARATION 10 - 15 FT.	BETWEEN OLD & NEW BLDG.	15 %	11.5 %
NEW BUILDING PROTECTED PROTECTED	FIRE SEPARATION 10 - 15 FT.	BETWEEN OLD & NEW BLDG.	45 %	32.2 %
NEW BUILDING PROTECTED PROTECTED	FIRE SEPARATION 5 - 10 FT.	@ PROPERTY LINE	15 %	11 %

EXST'G UNIT TYPES AND COUNT:

2 UNITS (1 BED - 1 BATH)
2 UNITS (2 BED - 2 BATH)
4 UNITS TOTAL

EXISTING BUILDING AREA

LEVEL 1 LIVING & STAIRS	= 1,672
LEVEL 2 LIVING & STAIRS	= 1,672
TOTAL FLOOR AREA	= 3,344 S.F.
NET SITE AREA	7,500 S.F.

	ALLOWED 1.25	PROVIDED
FLOOR AREA RATIO (SHADED AREA)	9,375 S.F.	9,294.41 S.F.

NEW UNIT AREAS		EXST'G UNIT AREAS	
TOTAL NUMBER OF UNITS	6	TOTAL NUMBER OF UNITS	4
UNIT 1	952.62 S.F.	UNIT 1	689.50 S.F.
UNIT 2	854.98 S.F.	UNIT 2	842.20 S.F.
UNIT 3	952.62 S.F.	UNIT 3	689.50 S.F.
UNIT 4	854.98 S.F.	UNIT 4	842.20 S.F.
UNIT 5	977.63 S.F.		
UNIT 6	928.49 S.F.		
TOTAL UNIT AREA	5,521.32 S.F.	TOTAL UNIT AREA	3,063.40 S.F.

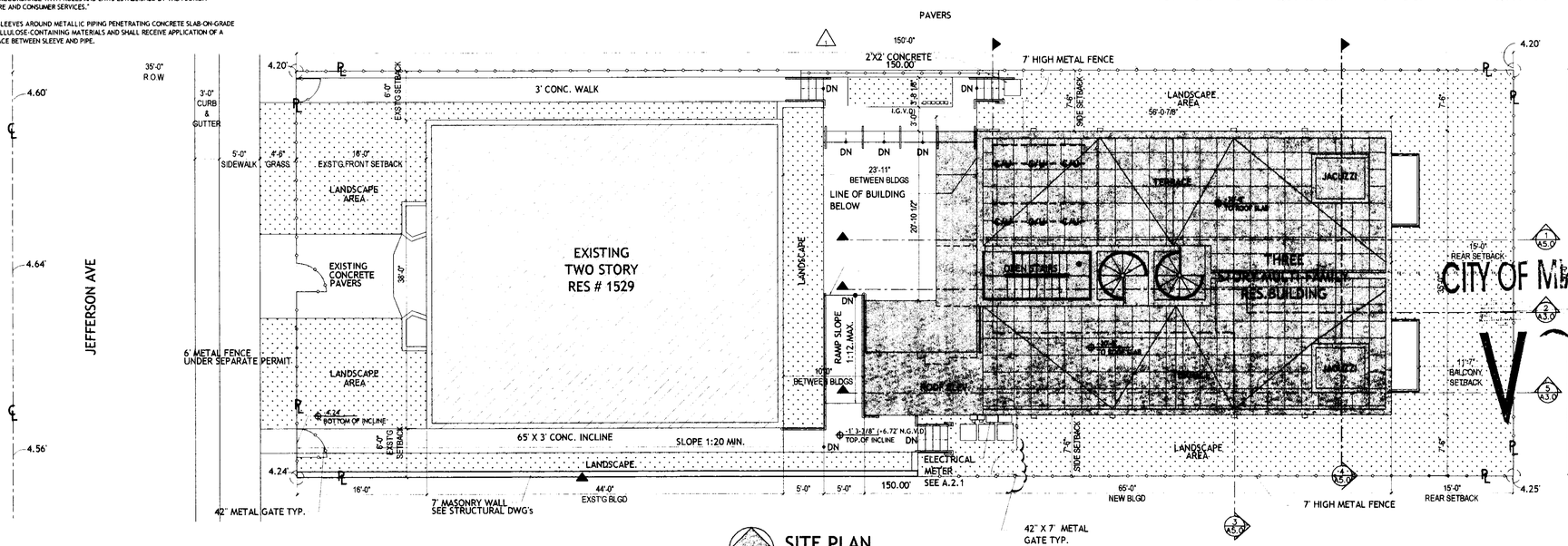

SITE PLAN
SCALE: 1/8" = 1'-0"

CITY OF MIAMI BEACH

DRAWN BY:
REVISIONS:
10-13-06

3DESIGN INC
ANTHONY LEON
ARCHITECTURE
AR0015752
4500 BISCAYNE BLVD SUITE#204 MIAMI, FL 33137 T 305.438.9577 F 305.438.9578

NEW BUILDING FOR 1529 JEFFERSON AVE MIAMI BEACH, FL 33139

SEAL

A-1.0

JUNE 6, 2006

GENERAL NOTES

1. THESE DOCUMENTS, AS INSTRUMENTS OF SERVICE, ARE THE PROPERTY OF 3DESIGN, Inc. AND MAY NOT BE USED OR REPRODUCED IN ANY MANNER WITHOUT EXPRESSED WRITTEN CONSENT
2. IT IS NOT THE INTENT OF THESE PLANS TO SHOW EVERY MINOR DETAIL OF CONSTRUCTION. THE GENERAL CONTRACTOR IS EXPECTED TO FURNISH AND INSTALL ALL ITEMS REQUIRED TO COMPLETE ALL BUILDING SYSTEMS AND PROVIDE ALL NECESSARY APPURTENANCES FOR EQUIPMENT TO BE PLACED IN PROPER WORKING ORDER WITH QUALITY CRAFTMANSHIP WITHOUT INCREASING THE CONTRACT SUM OR CONTRACT COMPLETION DATE.
3. ALL WORK DESCRIBED BY THSE DOCUMENTS MUST BE PERFORMED BY CONSTRUCTION PROFESSIONALS LICENCED & INSURED IN THE STATE OF FLORIDA (F.B.C. REQUIRED). ALL WORK SHALL BE PERFORMED IN ACCORDANCE W/ THE NATIONAL ELECTRIC CODE AND F.B.C.
4. THE GENERAL CONTRACTOR SHALL VERIFY ALL CONDITIONS AND DIMENSIONS AT THE JOB SITE PRIOR TO COMMENCING THE WORK. IF THERE ANY DISCREPANCIES BETWEEN THESE DRAWINGS AND FIELD CONDITIONS, THE CONTRACTOR SHALL NOTIFY THE ARCHITECT PRIOR TO COMMENCING THE WORK FOR CLEAR INSTRUCTION.
5. DO NOT SCALE THE DRAWINGS. REFER TO FIGURED DIMENSIONS.
6. THE CONTRACTOR IS TO ACQUIRE ALL REQUIRED PERMITS FOR THE DEMOLITION, CONSTRUCTION, FINISHING, AND OCCUPANCY OF THE PROJECT. ALL WORK SHALL BE PERFORMED IN ACCORDANCE WITH THE F.B.C., LATEST EDITION.
7. ALL WORK DONE UNDER THE SUPERVISION OF THE GENERAL CONTRACTOR SHALL BE IN A NEAT AND WORKMAN-LIKE MANNER IN ACCORDANCE WITH FEDERAL, STATE, AND LOCAL GOVERNING AGENCIES HAVING JURISDICTION.
8. THE GENERAL CONTRACTOR IS TO PROVIDE, LOCATE AND BUILD INTO THE WORK ALL SUPPLEMENTARY MATERIALS (INSERTS, ANCHORS, ANGLES, PLATES, OPENINGS, SLEEVES, HANGERS, SLAB DEPRESSIONS, PITCHES, ETC.) AS REQUIRED TO PROPERLY INSTALL, SUPPORT, BRACE, AND SHORE ALL BUILDING COMPONENTS WITHIN THE SCOPE OF THE PROJECT.
9. THE GENERAL CONTRACTOR SHALL REPAIR ALL DAMAGES TO THE EXISTING BUILDING DURING CONSTRUCTION RESULTING FROM SUCH LACK OF CARE AND DUE DILIGENCE AND MAY NOT CLAIM MONETARY DAMAGES OR TIME DELAYS AGAINST THE CONTRACT SUM OR CONTRACT COMPLETION DATE.
10. THE GENERAL CONTRACTOR SHALL COORDINATE AND SCHEDULE THE WORK OF ALL TRADES TO INSURE THAT THE PROJECT IS COMPLETED BY THE CONTRACT COMPLETION DATE.
11. PRIOR TO COMMENCING WORK, THE GENERAL CONTRACTOR SHALL SITE VERIFY THE LOCATION OF ALL EQUIPMENT TO BE REMOVED/RELOCATED. REMOVALS SHALL BE COORDINATED WITH THE OWNER. IF SO DIRECTED, THE G.C. MAY INCLUDE ANY ADDITIONAL COSTS TO THE BID.
12. THE GENERAL CONTRACTOR SHALL PROVIDE AN ONSITE DUMPSTER IN A LOCATION COORDINATED WITH THE OWNER FOR THE DISPOSAL OF REMOVED MATERIAL/CONSTRUCTION DEBRIS. THE DUMPSTER SHALL BE EMPTIED AT APPROPRIATE INTERVALS TO PREVENT OVERFLOW AND UNSIGHTLY CONDITIONS.
13. IT IS THE INTENT OF 3DESIGN, Inc. THAT THIS WORK BE IN CONFORMANCE WITH ALL REQUIREMENTS OF THE BUILDING AUTHORITIES HAVING JURISDICTION OVER THIS TYPE OF CONSTRUCTION AND OCCUPANCY. THE G.C. SHALL NOTIFY THE ARCHITECT/ENGINEERS OF RECORD IMMEDIATELY IF ANY DISCREPANCIES ARE ENCOUNTERED BETWEEN THE DRAWINGS AND THESE REQUIREMENTS. ANY DISCREPANCIES WILL BE RESOLVED BY ARCHITECT / ENGINEER OF RECORD PRIOR TO PROCEEDING WITH THE WORK.
14. THE GENERAL CONTRACTOR SHALL PROVIDE THE ARCHITECT WITH RED-LINE AS-BUILT DRAWINGS FOR ALL FIELD CHANGES/ADDITIONS TO THE WORK INCLUDED IN THE WORK.
15. THE GENERAL CONTRACTOR SHALL PROVIDE AN ITEMIZED COST BREAKDOWN OF ALL ITEMS AND PHASES OF CONSTRUCTION AT THE TIME OF BIDDING.
16. 3DESIGN, Inc. IS NOT RESPONSIBLE FOR CONSTRUCTION MEANS, METHODS, SEQUENCES, PROCEDURES, PRECAUTIONS, OR PROGRAMS RELATED TO THIS PROJECT'S CONSTRUCTION.
17. ALL WORK IS TO BE PLUM, LINE, SQUARE, AND ADEQUATELY SUPPORTED. FILL ALL VOIDS BETWEEN COMPONENTS. ALL ITEMS THAT DO NOT MEET 3DESIGN, Inc. SATISFACTION AS TO GOOD TRADE PRACTICES AND QUALITY CRAFTMANSHIP WILL BE REDONE AT THE G.C.'S EXPENSE.
18. THE GENERAL CONTRACTOR IS TO MAINTAIN A SAFE SITE, CLEAR OF DEBRIS AT ALL TIMES.
19. THE GENERAL CONTRACTOR AND ALL SUBCONTRACTORS ARE TO GUARANTEE THEIR WORK FOR A MINIMUM PERIOD OF ONE YEAR IN WRITING SUBMITTED WITH THE BID.
20. ALL DETAILS AND SECTIONS SHOWN ON THESE DRAWINGS ARE INTENDED TO BE TYPICAL AND SHALL BE CONSTRUED TO APPLY TO ANY SIMILAR SITUATION ELSEWHERE IN THE WORK EXCEPT WHERE A DIFFERENT DETAIL IS SHOWN. IT IS THE G.C.'S RESPONSIBILITY TO FORSEE ADDITIONAL CONDITIONS PRIOR TO COMMENCING THE WORK AND NOTIFY THE ARCHITECT IMMEDIATELY.
21. ALL ASSEMBLIES REFERRED TO AS FIRE-RATED SHALL BE A MINIMUM OF ONE HOUR UNLESS OTHERWISE INDICATED. ALL PENETRATIONS THROUGH ANY RATED ASSEMBLY SHALL BE PROVIDED W/ APPROVED PENETRATION RATED DEVICES.
22. THE GENERAL CONTRACTOR SHALL PROVIDE CUSTOM AND MULTI-COLOR PAINT SELECTIONS FOR OWNERS APPROVAL.
23. ALL HARDWARE, LIGHTING & BATHROOM FIXTURES AND MISC. SPECIFICATIONS NOT SPECIFICALLY CALLED OUT ON THE DRAWINGS SHALL BE PROVIDED BY THE OWNER.
24. THE GENERAL CONTRACTOR SHALL PROVIDE SHOP DRAWINGS FOR TRUSSES, STORM SHUTTERS, REINFORCING STEEL, WINDOWS, DOORS, CAST CONCRETE, ORNAMENTAL IRON, STEEL CONNECTORS, ORNAMENTAL WOOD, ETC. TO THE ARCHITECT FOR REVIEW PRIOR TO COMMENCING THE WORK.
25. THE GENERAL CONTRACTOR SHALL PROVIDE A TELEPHONE AND TELEPHONE LINE AT THE JOB SITE. THE G.C. IS RESPONSIBLE FOR IT'S USE.

FLOOD PROGRAM LEGEND:

for Compliance with Chapter 11c of the Dade County Code

N.G.V.D.(MSL 1929)

Site to be filled to County flood criteria elevation N.G.V.D. or an elevation no less than the highest approved crown elevation of the road abutting the property.

Area adjacent to lake or canal to be graded so as to prevent direct overland discharge of stormwater into lake or canal.

Lot will be graded so as to prevent direct overland discharge of stormwater onto adjacent property.
Applicant will provide certification prior to final inspection.

PROCESS: / FOLIO: / LOT		ADDRESS 1529 JEFFERSON AVE HIGHEST CROWN OF ROAD	
ELEVATION	LOWEST FLOOR	GARAGE/STORAGE	ADJACENT GRADE
EXISTING	4.20'	N.A	N.A
PROPOSED	8.00'	N.A	N.A
REQUIRED	8.00'	N.A	N.A

Tie-Beam Elevation Certificate, is required before making any inspection above lowest floor and a Final Elevation Certificate is required before issuance of certificate of occupancy or completion (Completion HOLD 186) (11c3-3d3) Call 375-6685

O.S.F.H.- (Outside Special Flood Hazard). All Electrical and Mechanical equipment must be located at or above the Required Lowest Floor Elevation.

S.F.H.- (Special Flood Hazard). All Electrical and Mechanical equipment must be located at or above the Base Flood Elevation or Required Lowest Floor Elevation

Lowest Floor- Shall mean the lowest floor of the lowest enclosed area (including basement). An unfinished or flood-resistant enclosure, usable for parking of vehicles, building access or storage in an area other than a basement area, is not considered a building's lowest floor; provided that such enclosure is not built as to render the structure in violation of the applicable non-elevation design requirements in Sections 11c-3, 11c-4, 11c-5. which ever is higher.

Garage or Storage (SFHA, OSHA(11c-5-f)) Fully encloses areas below the Base Flood Elevations shall be design to preclude finished living space except allowable uses i.e. parking, limited storage and building access and shall be design to allow for the entry and exit of flood-waters to automatically equalize hydrostatic flood forces on exterior walls. Design must be complying with this requirement must be either certified by a professional engineer or achitect and meet the following criteria:

(1) Provide a minimum of two(2) openings having a total net area of no less than 60 sq. in. ea. Bottom of all opening shall be no higher than one(1) foot above grade.

(2) The interior portion of such enclosed area shall NOT be partitioned or finished (flood resistant materials only) into separate rooms or air-conditioned.

Adjacent Grade 11c2-2- "Shall mean the highest elevation of the ground surface next to the proposed walls of the structure". 11c2-GG-"Minimum finished grade shall mean the elevation established in Dade County Flood Criteria Map at a specific development site or crown of road elevation of an existing adjacent road, whichever is higher"(or a waiver must be obtain). Site grading must be provided in a manner as to retain stormwater run-off into lakes or canals.

TERMITE PROTECTION NOTES

TERMITE PROTECTION. TERMITE PROTECTION SHALL BE PROVIDED BY REGISTERED TERMITICIDES OR OTHER APPROVED METHODS OF TERMITE PROTECTION LABELED FOR USE AS A PREVENTATIVE TREATMENT TO NEW CONSTRUCTION.

IF SOIL TREATMENT IS USED FOR SUBTERRANEAN TERMITE PREVENTION, THE INITIAL CHEMICAL SOIL TREATMENT INSIDE THE FOUNDATION PERIMETER SHALL BE DONE AFTER ALL EXCAVATION, BACKFILLING AND COMPACTION IS COMPLETE.

IF SOIL TREATMENT IS USED FOR SUBTERRANEAN TERMITE PREVENTION, SOIL AREA DISTURBED AFTER INITIAL CHEMICAL SOIL TREATMENT SHALL BE RETREATED WITH A CHEMICAL SOIL TREATMENT, INCLUDING SPACES BOXED OR FORMED.

IF SOIL TREATMENT IS USED FOR SUBTERRANEAN TERMITE PREVENTION, SPACE IN CONCRETE FLOORS BOXED OUT OR FORMED FOR THE SUBSEQUENT INSTALLATION OF PLUMBING TRAPS, DRAINS OR ANY OTHER PURPOSE SHALL BE CREATED BY USING PLASTIC OR METAL PERMANENTLY PLACED FORMS OF SUFFICIENT DEPTH TO ELIMINATE ANY PLANNED SOIL DISTURBANCE AFTER INITIAL CHEMICAL SOIL TREATMENT.

IF SOIL TREATMENT IS USED FOR SUBTERRANEAN TERMITE PREVENTION, CHEMICALLY TREATED SOIL SHALL BE PROTECTED WITH A MINIMUM 6 MIL VAPOR RETARDER TO PROTECT AGAINST RAINFALL DILUTION. IF RAINFALL OCCURS BEFORE VAPOR RETARDER PLACEMENT, RETREATMENT IS REQUIRED. ANY WORK, INCLUDING PLACE- MENT OF REINFORCING STEEL, DONE AFTER CHEMICAL TREATMENT UNTIL THE CONCRETE FLOOR IS POURED, SHALL BE DONE IN SUCH MANNER AS TO AVOID PENETRATING OR DISTUBING TREATED SOIL.

IF SOIL TREATMENT IS USED FOR SUBTERRANEAN TERMITE PREVENTION, CONCRETE OVERPOUR OR MORTAR ACCUMULATED ALONG THE EXTERIOR FOUNDATION PERIMETER SHALL BE REMOVED PRIOR TO EXTERIOR CHEMICAL SOIL TREATMENT, TO ENHANCE VERTICAL PENETRATION OF THE CHEMICALS.

IF SOIL TREATMENT IS USED FOR SUBTERRANEAN TERMITE PREVENTION, CHEMICAL SOIL TREATMENTS SHALL ALSO BE APPLIED UNDER ALL EXTERIOR CONCRETE OR GRADE WITHIN 1 FOOT (305 MM) OF THE PRIMARY STRUCTURE SIDEWALLS. ALSO, A VERTICAL CHEMICAL BARRIER SHALL BE APPLIED PROMPTLY AFTER CONSTRUCTION IS COMPLETED, INCLUDING INITIAL LANDSCAPING AND IRRIGATION/SPRINKLER INSTALLATION. ANY SOIL DISTURBED AFTER THE CHEMICAL VERTICAL BARRIER IS APPLIED SHALL BE PROMPTLY RETREATED.

TERMITE PROTECTION. ALL BUILDINGS SHALL HAVE PRECONSTRUCTION TREATMENT PROTECTION AGAINST SUBTERRANEAN TERMITES. THE RULES AND LAWS AS ESTABLISHED BY THE FLORIDA DEPARTMENT OF AGRICULTURE AND CONSUMER SERVICES SHALL BE DEEMED AS APPROVED WITH RESPECT TO PRE-CONSTRUCTION SOIL TREATMENT FOR PROTECTION AGAINST SUBTERRANEAN TERMITES. A CERTIFICATE OF COMPLIANCE SHALL BE ISSUED TO THE BUILDING DEPARTMENT BY THE LICENSED PEST CONTROL COMPANY THAT CONTAINS THE FOLLOWING STATEMENT:
"THE BUILDING HAS RECEIVED A COMPLETE TREATMENT FOR THE PREVENTION OF SUBTERRANEAN TERMITES. TREATMENT IS IN ACCORDANCE WITH RULES AND LAWS ESTABLISHED BY THE FLORIDA DEPARTMENT OF AGRICULTURE AND CONSUMER SERVICES."

PENETRATION. PROTECTIVE SLEEVES AROUND METALLIC PIPING PENETRATING CONCRETE SLAB-ON-GRADE FLOORS SHALL NOT BE OF CELLULOSE-CONTAINING MATERIALS AND SHALL RECEIVE APPLICATION OF A TERMITICIDE IN ANNULAR SPACE BETWEEN SLEEVE AND PIPE.

BURGLARY/SECURITY NOTES

1. ALL LOCKS ON EXTERIOR DOORS AND DOORS CONNECTING GARAGE AREAS SHALL BE CAPABLE OF RESISTING A FORCE OF 300 POUNDS APPLIED IN ANY MOVABLE DIRECTION AND IN ACCORDANCE WITH RESISTANCE STANDARDS SET FORTH IN 3601.2 (F.B.C.)

2. ALL SINGLE EXTERIOR SWING DOORS SHALL HAVE A LOCK TO BE KEY OPERATED FROM EXTERIOR WITH A MINIMUM OF 6000 POSSIBLE KEY CHANGES OR LOCKING AUXILIARY SINGLE DEAD BOLT (MIN. 1 INCH THROW) WITH HARDENED BOLT INSERTS.

3. THE ACTIVE LEAF OF PAIRS OF EXTERIOR SWING DOORS SHALL HAVE SAME LOCKS AS REQUIRED FOR SINGLE EXTERIOR SWING DOORS. THE INACTIVE LEAF OF THESE PAIRS OF DOORS SHALL HAVE MULTIPLE POINT LOCKS WITH 5/8 INCH MINIMUM THROW BOLTS WITH INSERTS.

4. SLIDING GLASS DOORS SHALL BE PROVIDED WITH SLIDING DOOR DEAD BOLTS OR A BOLT OR PIN NOT REMOVABLE OR OPERABLE FROM EXTERIOR, AT THE JAMB, HEAD, SILL OR AT MEETING MULLIONS. THESE DOORS SHALL BE REINFORCED IN THE STRIKE AND LOCK AREA TO MAINTAIN BOLT STRENGTH EFFECTIVENESS, IF NECESSARY, AND SUCH DOORS SHALL HAVE NO SCREWS REMOVABLE FROM OUTSIDE WHICH WOULD FACILITATE READY ENTRY FROM OUTSIDE.

5. JAMBS SHALL BE PROVIDED WITH APPROVED REINFORCED STRIKES INSTALLED WITH SCREWS AT LEAST 3" IN LENGHT AND PENETRATING SUB-BUCKS AT LEAST 1"

6. HINGES ON EXTERIOR OUT SWINGING DOORS SHALL HAVE NON-REMOVABLE PINS.

7. JAMBS OF ALL EXTERIOR OFFSET TYPE IN-SWING(ING) DOORS BE RABBETED, OR OF SIMILAR FABRICATION, TO PREVENT DEFEATING THE PURPOSE OF THE STRIKE AND THE INTEGRITY OF LOCKS AND LATCHES.

8. SINGLE, SWINGING, EXTERIOR DOORS, IF WOOD SHALL BE SOLID CORE OF NOT LESS THAN 1 3/8 INCHES THICK.

9. GLASS AND EXTERIOR DOORS SHALL COMPLY WITH THE AMERICAN NATIONAL STANDARDS INSTITUTE'S STANDARD 297.1

10. VISION PANELS IN EXTERIOR DOORS OTHER THAN GLAZING WITHIN 40 INCHES OF INSIDE LOCKING ACTIVATING DEVICE OF LOOSE AND SWINGING DOORS SHALL COMPLY WITH AMERICAN NATIONAL STANDARDS INSTITUTE STANDARD 297.1.

11. SLIDING GLASS DOORS AND WINDOWS SHALL BE INSTALLED AND CONSTRUCTED SO THAT NO PANEL CAN BE LIFTED FROM THE TRACKS WHEN IN THE LOCKED POSITION AND SO AS TO COMPLY WITH THE ARCHITECTURAL ALUMINUM MFGS. ASSOC. STANDARDS FOR FORCED ENTRY RESISTANCE, AAMA 1303.3.

12. LOCKS IN EXTERIOR WINDOWS SHALL CUMPLY WITH SECTION 3104 (F.B.C.)

13. FRONT MAIN ENTRANCE DOORS SHALL BE PROVIDED WITH A DOOR SCOPE OR VISION PANELS.

SIXTEENTH

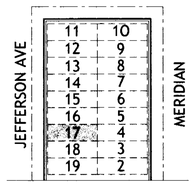

LOCATION PLAN
SCALE: N.T.S

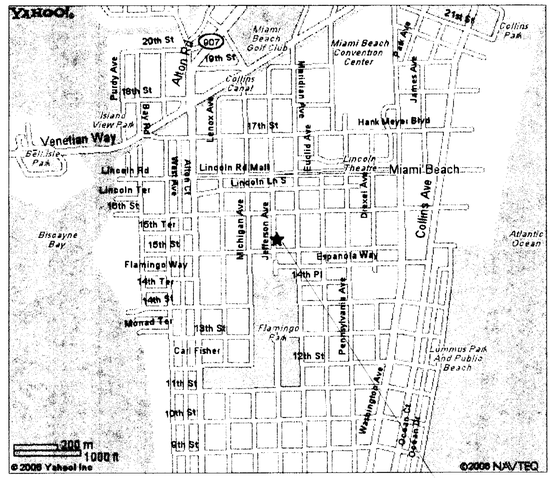

SUBJECT PROPERTY

LOCATION MAP
SCALE: N.T.S

BUILDING TYPE:

RESIDENCES TYPE VI 1 HOUR UNPROTECTED SPRINKLERED

ZONING DATA:

LEGAL DESCRIPTION

LOT 17, BLOCK 62, ,OF LINCOLN SUBDIVISION, ACCORDING TO THE PLAT THEREOF AS RECORDED IN PLAT BOOK 9, PAGE 69, OF THE PUBLIC RECORDS OF MIAMI-DADE COUNTY, FLORIDA.

SITE PLAN INFORMATION:

ZONING DESIGNATION: RM-1
TOTAL SITE AREA: 0.17 ACRES (7,500 S.F.)
TYPE OF OCCUPANCY: MULTI-FAMILY

UNIT TYPES AND COUNT:

2 UNITS (1 BED - 2 BATH)
4 UNITS (1 BED - 1-1/2 BATH)
6 UNITS TOTAL

NEW BUILDING AREA

LEVEL 1 ELEVATOR, STAIRS & LIVING = 1981.95
LEVEL 2 STAIRS & LIVING = 1904.58
LEVEL 3 STAIRS & LIVING = 1904.58
LEVEL 4 ROOF TERRACE STAIRS = 159.30
TOTAL FLOOR AREA = 5,950.41 S.F.

SETBACKS

PEDESTAL	ALLOWED	PROVIDED
FRONT	20'	15'-0" EXISTING
REAR	15'	15'-0"
NORTH SIDE	7'-6"	7'-6"
SOUTH SIDE	7'-6"	7'-6"

BALCONIES / ORNAMENTAL PROJECTIONS

		ALLOWED	PROVIDED
FRONT	N/A		
REAR	(25% OF 14')	3'-6"	3'-6"
NORTH SIDE	N/A		
SOUTH SIDE	N/A		

BUILDING HEIGHT

	ALLOWED	PROVIDED
	40'-0"	34'-5" TO TOP OF ROOF SLAB
# OF STORIES ABOVE GRADE		3 STORIES

EXST'G UNIT TYPES AND COUNT:

2 UNITS (1 BED - 1 BATH)
2 UNITS (2 BED - 2 BATH)
4 UNITS TOTAL

EXISTING BUILDING AREA

LEVEL 1 LIVING & STAIRS = 1,672
LEVEL 2 LIVING & STAIRS = 1,672
TOTAL FLOOR AREA = 3,344 S.F.
NET SITE AREA = 7,500 S.F.

	ALLOWED	PROVIDED
FLOOR AREA RATIO (SHADED AREA)	1.25 9,375 S.F.	9,294.41 S.F.

NEW UNIT AREAS		EXST'G UNIT AREAS	
TOTAL NUMBER OF UNITS	6	TOTAL NUMBER OF UNITS	4
UNIT 1	952.62 S.F.	UNIT 1	689.50 S.F.
UNIT 2	854.98 S.F.	UNIT 2	842.20 S.F.
UNIT 3	952.62 S.F.	UNIT 3	689.50 S.F.
UNIT 4	854.98 S.F.	UNIT 4	842.20 S.F.
UNIT 5	977.63 S.F.		
UNIT 6	928.49 S.F.		
TOTAL UNIT AREA	5,521.32 S.F.	TOTAL UNIT AREA	3,063.40 S.F.

PARKING

	REQUIRED	PROVIDED
6 UNITS X 1.5 = 9 SPACES		
REGULAR	8	0
HANDICAPPED	1	0

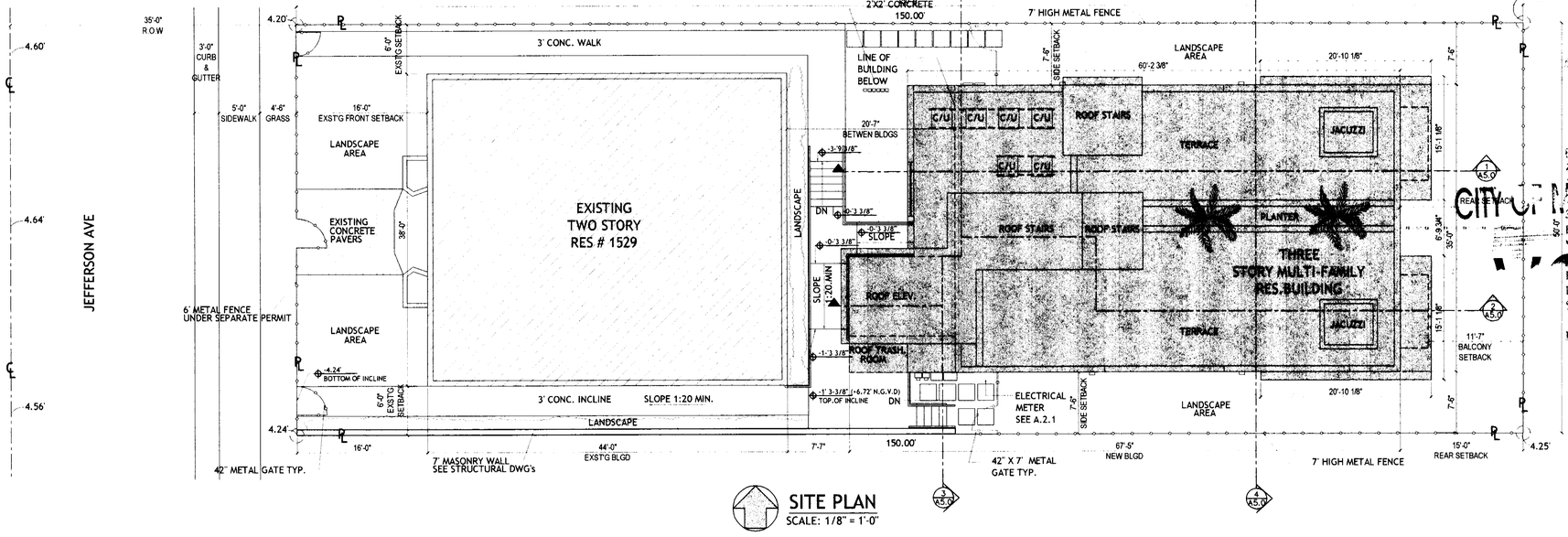

SITE PLAN
SCALE: 1/8" = 1'-0"

OFFICE COPY
CITY OF MIAMI BEACH
APPROVED FOR PERMIT BY THE FOLLOWING:
BUILDING:
ZONING:
PLUMBING:
ELECTRICAL:
MECHANICAL:
FIRE PREVENTION:
ENGINEERING:
PUBLIC WORKS:
STRUCTURAL:
ACCESSIBILITY:
ELEVATOR:
As per Florida Building Code Section 10
REVIEWED FOR CODE COMPLIAN

CITY OF MIAMI BEACH

NEW BLDG FOR 1529 JEFFERSON AVE MIAMI BEACH, FL 33139

DRAWN BY:
REVISIONS:

3DESIGN Inc
ANTHONY LEON
ARCHITECTURE
AA0026752
4600 BISCAYNE BLVD. SUITE#204 MIAMI, FL 33137 T 305 438 9577 F 305 438 9578

SEAL

A-1.0
JUNE 6, 2006

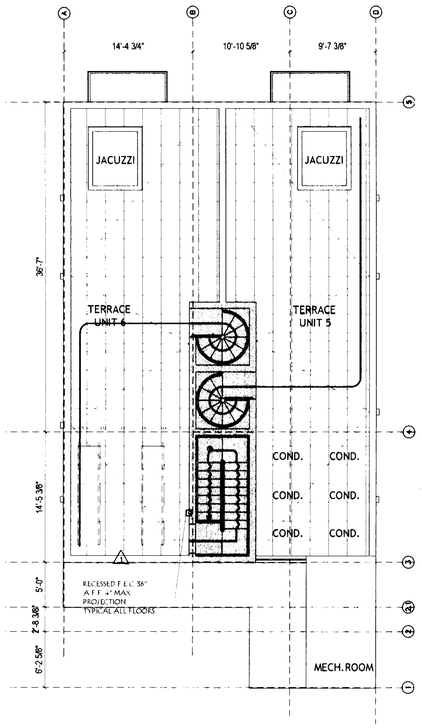

ROOF TERRACE
SCALE: 3/32" = 1'-0"

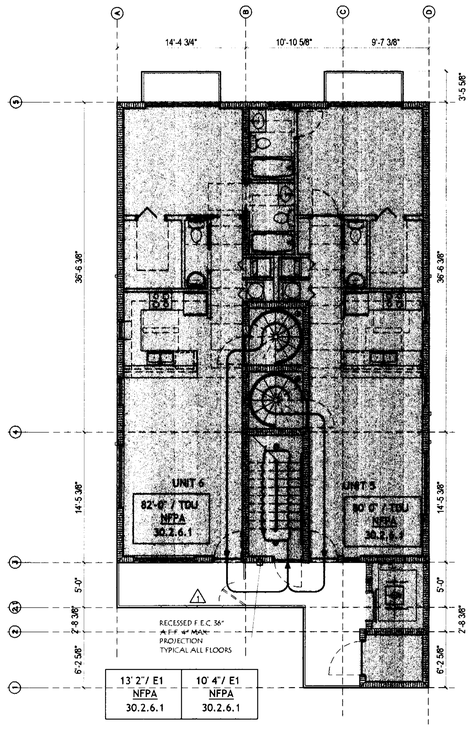

3RD FLOOR
SCALE: 3/32" = 1'-0"

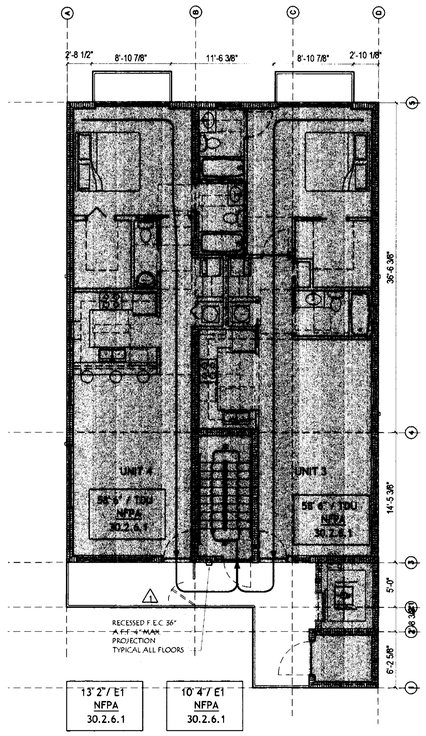

2ND FLOOR
SCALE: 3/32" = 1'-0"

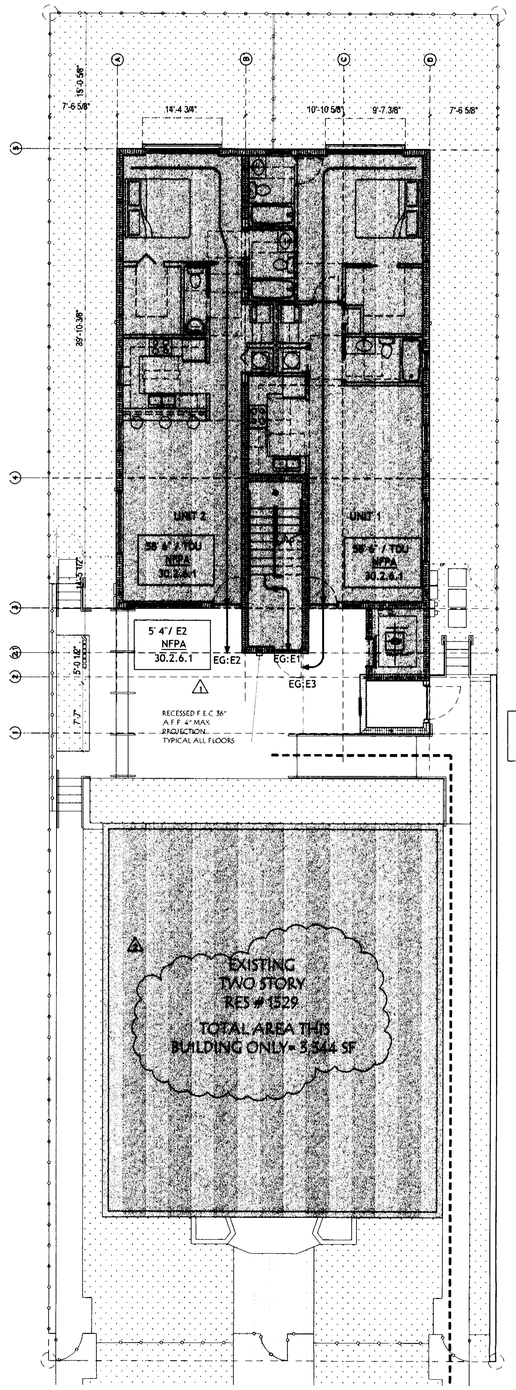

1ST FLOOR
SCALE: 3/32" = 1'-0"

TRAVEL DISTANCE NOTE

FEET TO EGRESS COMPONENT — EGRESS COMPONENT

X'-Y" / ABC

- E# = EXIT NUMBER
- EA = EXIT ACCESS
- CP = COMMON PATH OF TRAVEL
- TDU = TRAVEL DISTANCE W/IN UNIT

GOVERNING CODE REFERENCE

- NFPA101 = NFPA 101 2000
- FFPC = FLORIDA FIRE PREVENTION CODE
- FBC = FLORIDA BUILDING CODE 2001

CODE SECTION

EGRESS COMPONENT NOTE

EGRESS COMPONENT IDENTIFIER — EGRESS COMPONENT

EG : SS

- E# = EXIT NUMBER

CODE REFERENCES NEW APARTMENTS

NFPA 101
30.2.6.1 (TRAVEL DIST. W/IN SPRINKLERED UNIT IS 125' TO DOOR)

NFPA 101
30.2.6.2
(TRAVEL TO NEAREST EXIT SHALL NOT EXCEED 100')]

2 FLOOR AREA

WALL LEGEND

1 HOUR RATED WALL

LIFE SAFETY PLAN

1

WALL LEGEND

- MASONRY 8" - 1HR FIRE RATED
- PARTITION WALL
- PARTITION - 3-5/8" STUD - SEE A7.0 FOR MATERIAL FINISH 1HR FIRE RATED WALL
- MASONRY - 8" CMU WALL

DRAWN BY:

REVISIONS:

2 04-24-07
1 10.13.06

3DESIGN INC
ANTHONY LEON
AR0025753
ARCHITECTURE
4300 BISCAYNE BLVD SUITE#004 MIAMI, FL 33137 T 305 438 9577 F 305 438 9579

5.24.07
SEAL

NEW BUILDING
FOR
1529 JEFFERSON AVE
MIAMI BEACH, FL
33139

OFFICE COPY
CITY OF MIAMI BEACH
APPROVED FOR PERMIT BY THE FOLLOWING:
BUILDING: JUN 13 2006
ZONING:
PLANNING:
ELEVATOR:
MECHANICAL:
FIRE PREVENTION:
ENGINEERING:
PUBLIC WORKS:
STRUCTURAL:
ACCESSIBILITY:

A-1.1
JUNE 6, 2006

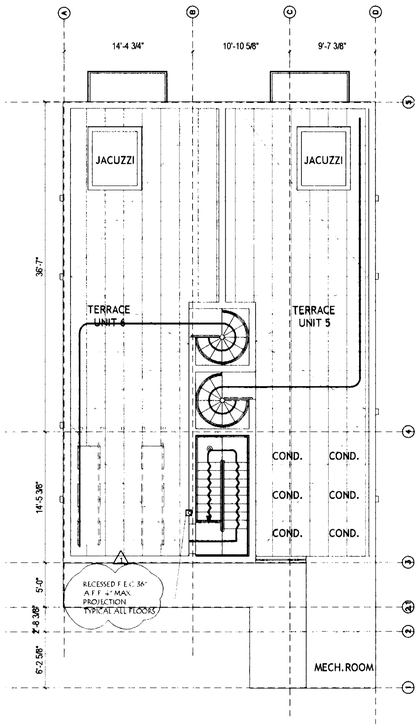

ROOF TERRACE
SCALE: 3/32" = 1'-0"

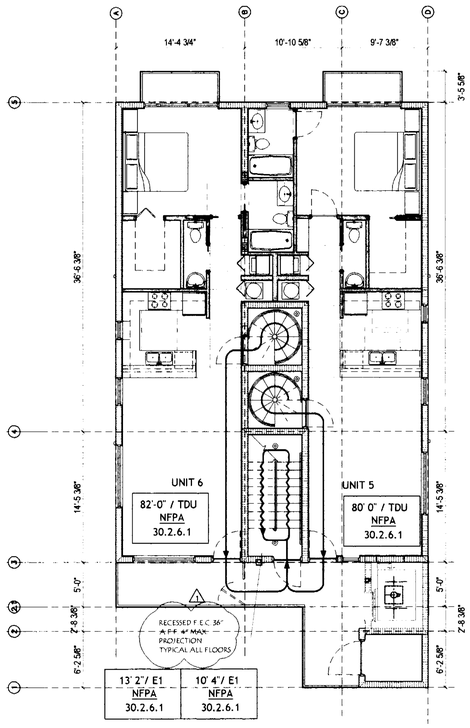

3RD FLOOR
SCALE: 3/32" = 1'-0"

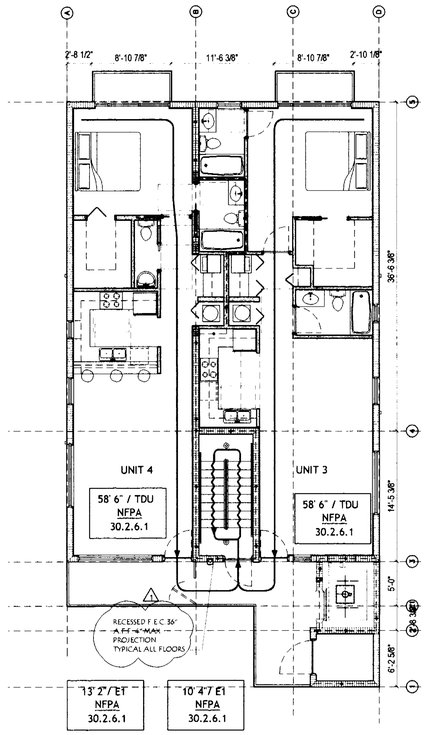

2ND FLOOR
SCALE: 3/32" = 1'-0"

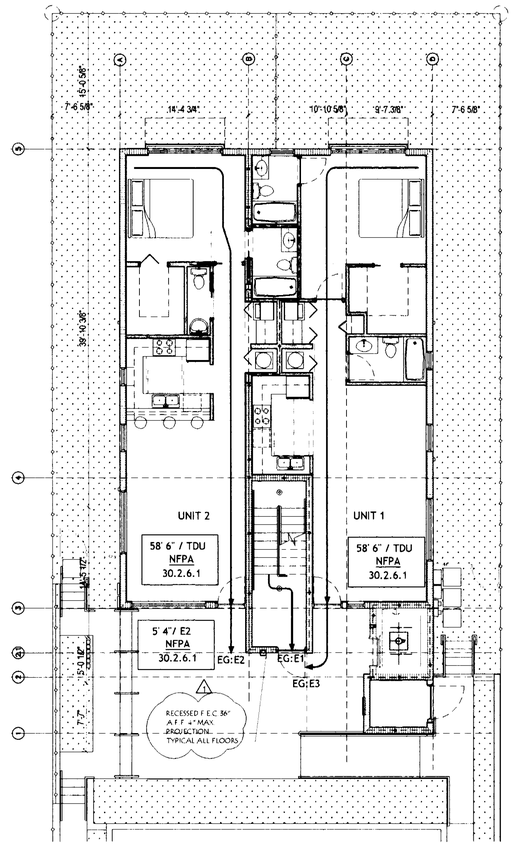

1ST FLOOR
SCALE: 3/32" = 1'-0"

TRAVEL DISTANCE NOTE

FEET TO EGRESS COMPONENT — EGRESS COMPONENT

X'-Y" / ABC

- E# = EXIT NUMBER
- EA = EXIT ACCESS
- CP = COMMON PATH OF TRAVEL
- TDU = TRAVEL DISTANCE W/IN UNIT

EGRESS COMPONENT NOTE

EGRESS COMPONENT IDENTIFIER — EGRESS COMPONENT

EG : SS

- E# = EXIT NUMBER

GOVERNING CODE REFERENCE

- NFPA101 = NFPA 101 2000
- FFPC = FLORIDA FIRE PREVENTION CODE
- FBC = FLORIDA BUILDING CODE 2001

CODE SECTION

CODE REFERENCES NEW APARTMENTS

NFPA 101
30.2.6.1 (TRAVEL DIST. W/IN SPRINKLERED UNIT IS 125' TO DOOR)

NFPA 101
30.2.6.2
(TRAVEL TO NEAREST EXIT SHALL NOT EXCEED 100')]

WALL LEGEND

1 HOUR RATED WALL

LIFE SAFETY PLAN

WALL LEGEND

- MASONRY 8" - 1HR FIRE RATED
- PARTITION WALL
- PARTITION - 3-5/8" STUD - SEE A7.0 FOR MATERIAL FINISH 1HR FIRE RATED WALL
- MASONRY - 8" CMU WALL

DRAWN BY:

REVISIONS:

1 10.13.06

3DESIGN INC
ANTHONY LEON
ARCHITECTURE
4300 BISCAYNE BLVD. SUITE#204 MIAMI, FL 33137 T 305 438 9377 F 305 438 9578

10/10/06
SEAL

NEW BUILDING FOR
1329 JEFFERSON AVE
MIAMI BEACH, FL 33139

VOID

BY:

CITY OF MIAMI BEACH
APPROVED FOR PERMIT BY THE FOLLOWING:
mm 3/6/07
BUILDING:
ZONING:
PARKING:
CONCURRENCY:
PLUMBING:
ELECTRICAL:
MECHANICAL:
FIRE PREVENTION:
ENGINEERING:
PUBLIC WORKS:
STRUCTURE:
ACCESSIBILITY:
ELEVATOR:
As per [illegible] Section 104.5 [illegible]

A-1.1

JUNE 6, 2006

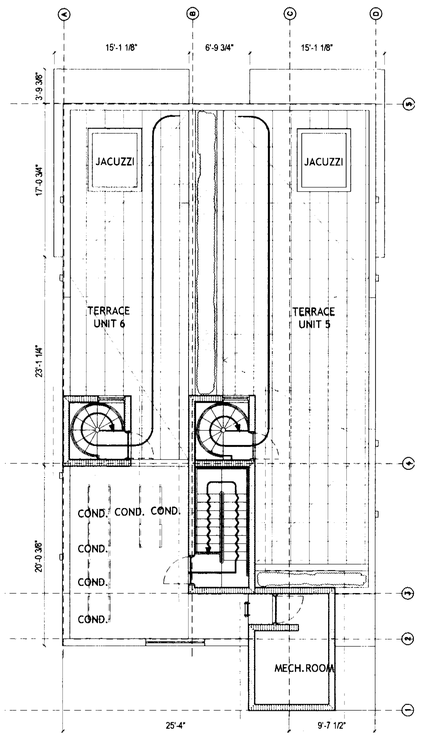

ROOF TERRACE
SCALE: 3/32" = 1'-0"

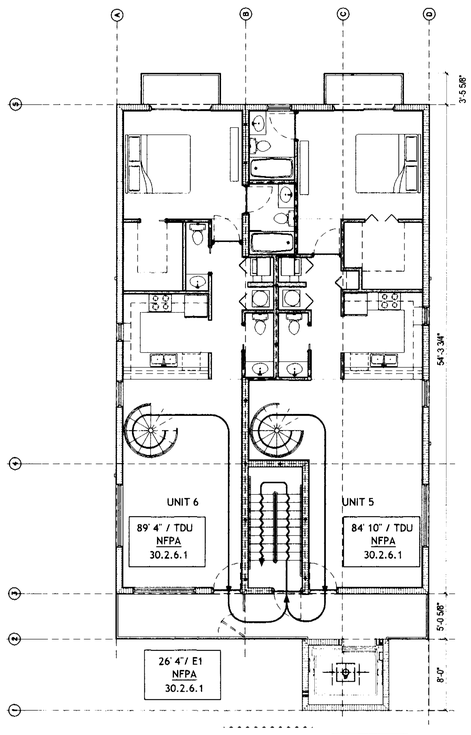

3RD FLOOR
SCALE: 3/32" = 1'-0"

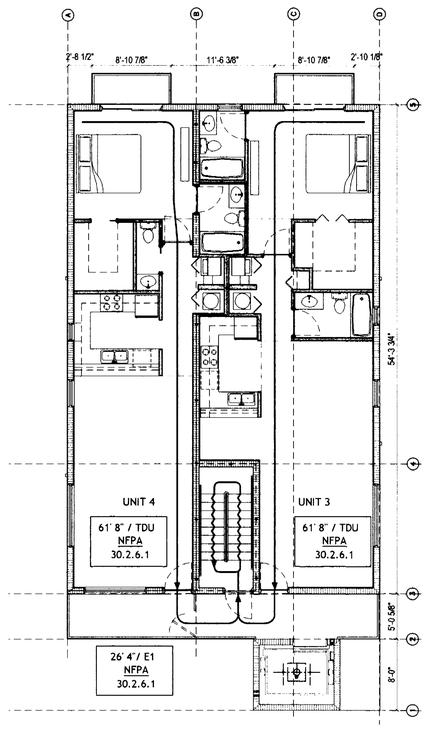

2ND FLOOR
SCALE: 3/32" = 1'-0"

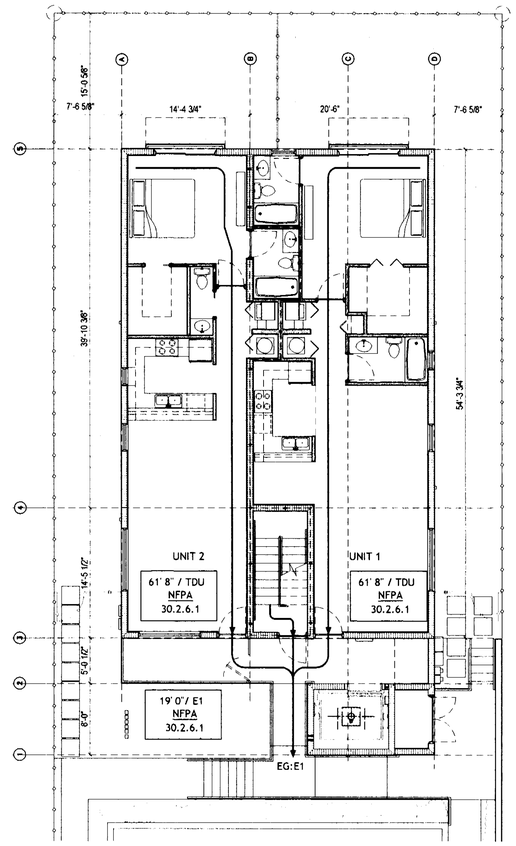

1ST FLOOR
SCALE: 3/32" = 1'-0"

16' 2"/ E1
NFPA
30.2.6.1

TRAVEL DISTANCE NOTE

FEET TO EGRESS COMPONENT — EGRESS COMPONENT
>$$
- E# = EXIT NUMBER
- EA = EXIT ACCESS
- CP = COMMON PATH OF TRAVEL
- TDU = TRAVEL DISTANCE W/IN UNIT

EGRESS COMPONENT NOTE

EGRESS COMPONENT IDENTIFIER — EGRESS COMPONENT
EG :$$
- E# = EXIT NUMBER

GOVERNING CODE REFERENCE

CODE SECTION
- NFPA101 = NFPA 101 2000
- FFPC = FLORIDA FIRE PREVENTION CODE
- FBC = FLORIDA BUILDING CODE 2001

CODE REFERENCES NEW APARTMENTS

NFPA 101
30.2.6.1 (TRAVEL DIST. W/IN SPRINKLERED UNIT IS 125' TO DOOR)

NFPA 101
30.2.6.2
(TRAVEL TO NEAREST EXIT SHALL NOT EXCEED 100')]

WALL LEGEND

1 HOUR RATED WALL

LIFE SAFETY PLAN

DRAWN BY:

REVISIONS:

3DESIGN INC
ANTHONY LEON
AR0005752
ARCHITECTURE
4500 BISCAYNE BLVD. SUITE#404 MIAMI, FL 33137 T 305 458 9377 F 305 458 9578

SEAL

NEW BLDG
FOR
1529 JEFFERSON AVE
MIAMI BEACH, FL
33139

CITY OF MIAMI BEACH
APPROVED FOR PERMIT
THE FOLLOWING:
BUILDING:
ZONING:
DRB/HPB:
CONCURRENCY:
PLANNING:
ELECTRICAL:
MECHANICAL:
FIRE PREVENTION:
ENGINEERING:
PUBLIC WORKS:
STRUCTURAL:
ACCESSIBILITY:
OTHER:

CITY OF MIAMI BEACH

A-1.1

JUNE 6, 2006

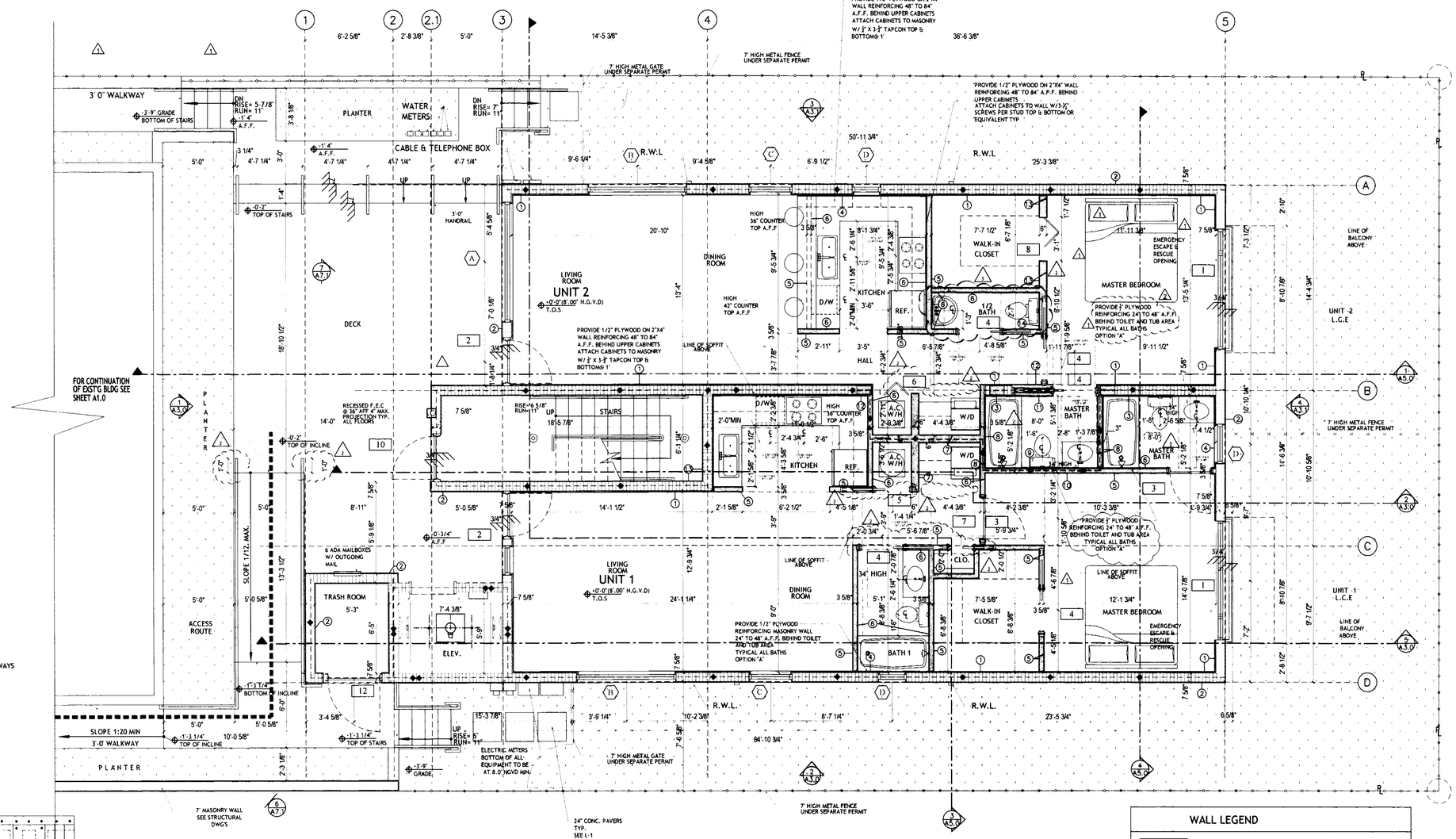

FIRST FLOOR PLAN
SCALE: 1/4" = 1'-0"

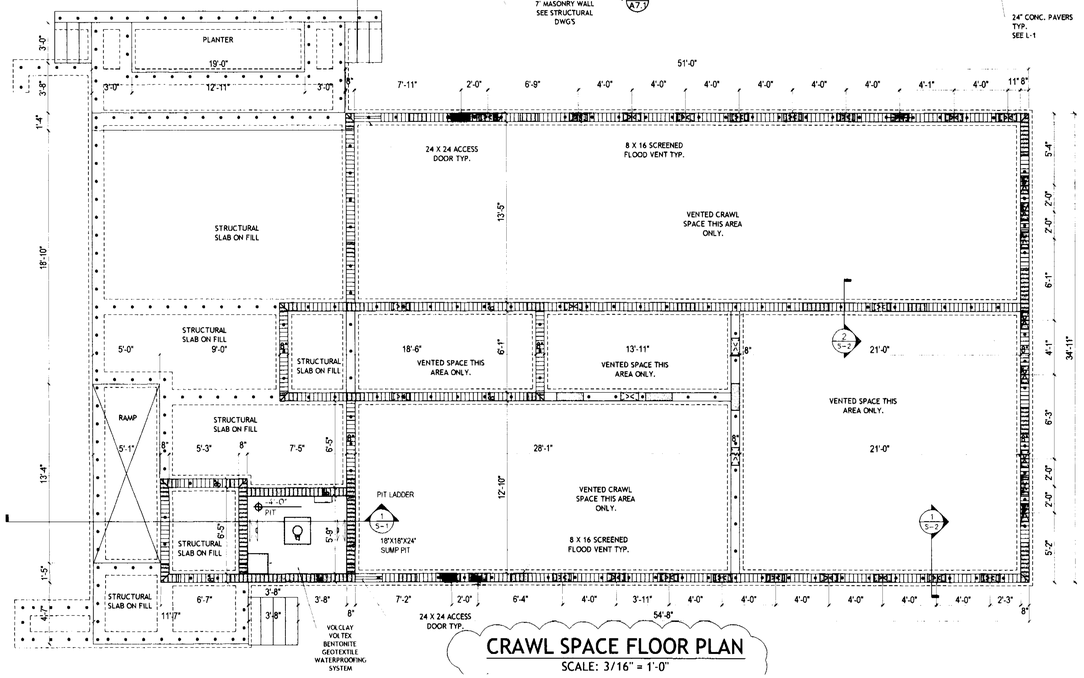

CRAWL SPACE FLOOR PLAN
SCALE: 3/16" = 1'-0"

DOOR SCHEDULE:

#	SIZE	THICK	MATERIAL	FRAME	GLASS	TYPE	NOTES
1	6'-8-3/4" X 7'0"		GLASS/ALUM	ALUM		SL	FIXED/SLIDING SEE DOOR ELEV.
2	3'0"X7'0"	1 3/4"	WOOD	ALUM		SW	
3	2'-10" X 7'0"	1 3/8"	WOOD			SW	
4	2'-10" X 7'0"	1 3/8"	WOOD			PK	TO PROVIDE 32" CLR. OPENING
5	2'-4" X 7'-0"	1 3/8"	METAL			PK	LOUVERED
6	2'-8" X 7'0"	1 3/8"	METAL			BF	FRAMELESS
7	1'-6" X 7'0"	1 3/8"				PK	
8	3'0"X 7'0"	1 3/8"	METAL			BF	FRAMELESS
9	2'-4"X7'0"	1 3/8"	METAL			BF	LOUVERED
10	3'0"X7'0"	1 3/4"	METAL			SW	SELF-CLOSING
11	3'0"X7'0"	1 3/4"	METAL			SW	SELF-CLOSING
12	3'-8"X7'0"	1 3/4"	METAL			SW	
13	2'-2"X7'0"	1 3/4"	METAL			BF	LOUVERED

NOTE: ALL EXTERIOR DOORS UNDER SEPARATE PERMIT

WINDOW SCHEDULE:

#	SIZE	HEAD	GLASS	TYPE	FINISH	NOTES
A	8'-4 3/4" X 7'-2"	7'-2"	IMPACT	FIXED	ALUM	
B	6'-11 7/8" x 7'-2"	7'-2"	IMPACT	FIXED/SL	ALUM	
C	3'-1" x 7'-2"	7'-2"	IMPACT	FIXED/CA	ALUM	
D	2'-0" x 3' 6 7/8"	2'-0"	IMPACT	CASE	ALUM	

ALL WINDOWS TO BE UNDER SEPARATE PERMIT

WALL LEGEND

- MASONRY 8"- 1HR FIRE RATED WALL
- PARTITION WALL
- PARTITION - 3-5/8" STUD - SEE A7.0 FOR MATERIAL FINISH 1HR FIRE RATED WALL
- MASONRY - 8" CMU WALL
- REINFORCED PARTITION 3-5/8" OR 6" STUD SEE TYP. PARTITION WALL DETAIL A-7.0

KEY NOTES

- (#) WALL TYPE SEE SHEET A-7.0
- (#) DOOR TYPE SHEE SHEET A-6.1
- (#) WINDOW TYPE SEE SHEET A-6.0

FLOOD VENT CALCULATION

CRAWL SPACE AREA= 1,365 SF
FLOOD VENT AREA REQUIRED= 1,365 SQ.IN.
8 X 16 SCREENED FLOOD VENT @ 8" A.F.G.= 55 SQ.IN.
FLOOD VENTS REQUIRED= 29 = (1565 / 55)
FLOOD VENTS PROVIDED= 30

* NOTES:
ALL ELECTRICAL, MECHANICAL AND PLUMBING EQUIPMENT MUST BE AT OR ABOVE BASE FLOOD ELEVATION

ALL MATERIALS USED BELOW BASE FLOOD ELEVATION 8'-0" N.G.V.D MUST BE FLOODPROOFING MATERIALS

DRAWN BY:

REVISIONS:
1 03.06.07
2 01.31.07
3 10.13.06

3D DESIGN INC
ANTHONY LEON
ARCHITECTURE
AR0006253
4500 BISCAYNE BLVD. SUITE#204 MIAMI, FL 33137 T.305.438.9577 F.305.438.9579

SEAL

NEW BUILDING FOR
1529 JEFFERSON AVE
MIAMI BEACH, FL
33139

A-2.1

JUNE 6, 2006

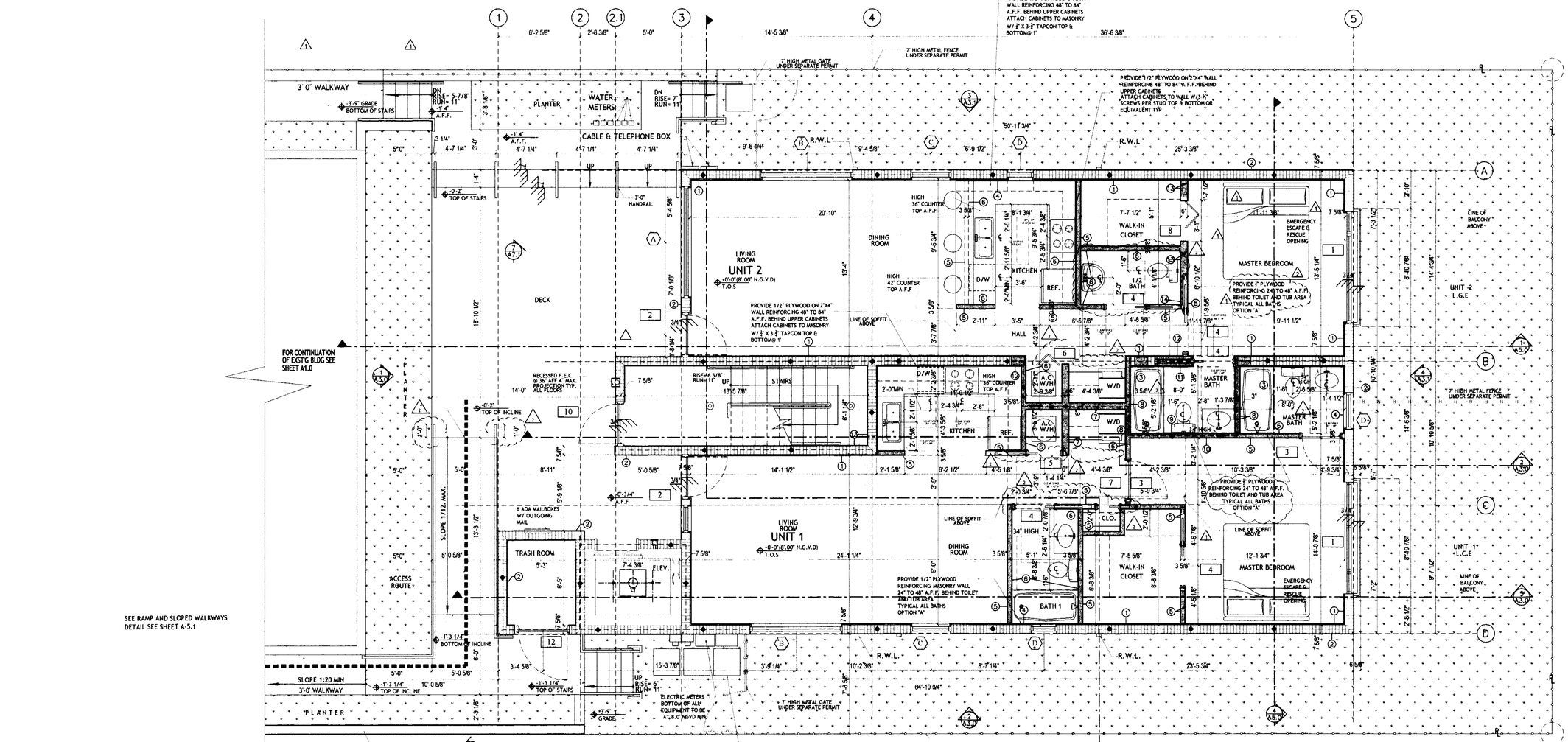

FIRST FLOOR PLAN
SCALE: 1/4" = 1'-0"

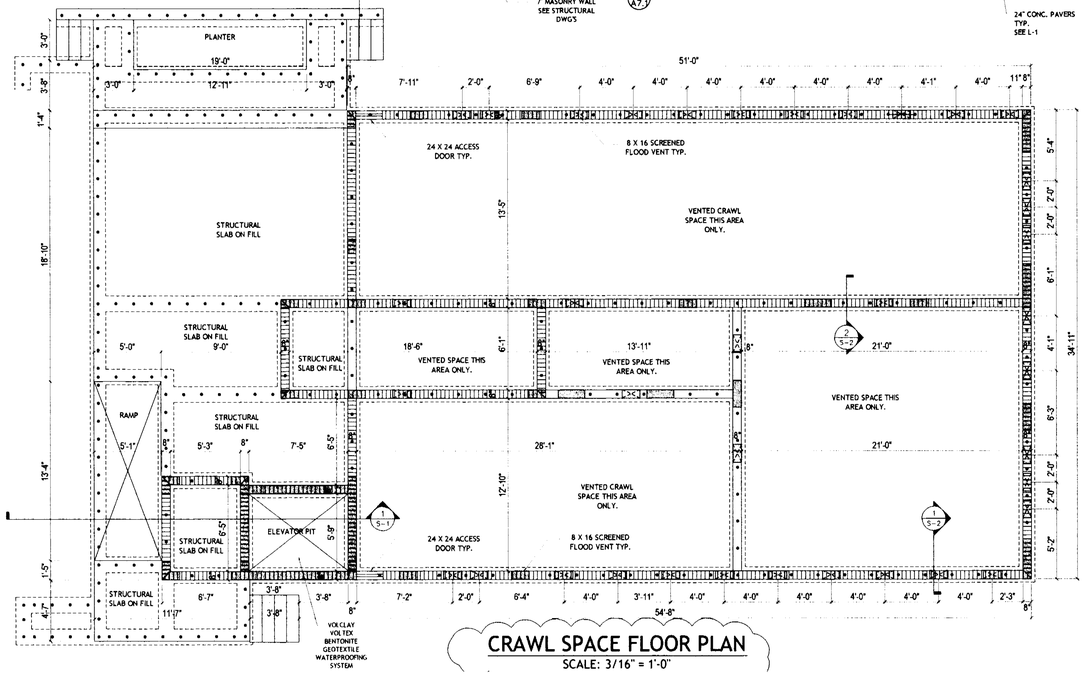

CRAWL SPACE FLOOR PLAN
SCALE: 3/16" = 1'-0"

DOOR SCHEDULE:

#	SIZE	THICK.	MATERIAL	FRAME	GLASS	TYPE	NOTES
1	6'-8 3/4" X 7'0"		GLASS/ALUM	ALUM		SL	FIXED/SLIDING SEE DOOR ELEV
2	3'0"X7'0"	1 3/4"	WOOD	ALUM		SW	
3	2'-10" X 7'0"	1 3/8"	WOOD			SW	
4	2'-10" X 7'0"	1 3/8"	WOOD			PK	TO PROVIDE 32" CLR. OPENING
5	2'-4" X 7'-0"	1 3/8"	METAL			PK	LOUVERED
6	2'-8" X 7'0"	1 3/8"	METAL			BF	FRAMELESS
7	1'-6" X 7'0"	1 3/8"				PK	
8	3'0"X 7'0"	1 3/8"	METAL			BF	FRAMELESS
9	2'-4"X7'0"	1 3/8"	METAL			BF	LOUVERED
10	3'0"X7'0"	1 3/4"	METAL			SW	SELF-CLOSING
11	3'-0"X7'0"	1 3/4"	METAL			SW	SELF-CLOSING
12	3'-8"X7'0"	1 3/4"	METAL			SW	
13	2'-2"X7'0"	1 3/4"	METAL			BF	LOUVERED

NOTE: ALL EXTERIOR DOORS UNDER SEPARATE PERMIT

WINDOW SCHEDULE:

#	SIZE	HEAD	GLASS	TYPE	FINISH	NOTES
A	8'-4 3/4" X 7'-2"	7'-2"	IMPACT	FIXED	ALUM	
B	6'-11 7/8" X 7'-2"	7'-2"	IMPACT	FIXED/SL	ALUM	
C	3'-1" x 7'-2"	7'-2"	IMPACT	FIXED/CA	ALUM	
D	2'-0" x 3'-6 7/8"	2'-0"	IMPACT	CASE	ALUM	

ALL WINDOWS TO BE UNDER SEPARATE PERMIT

WALL LEGEND

- MASONRY 8"- 1HR FIRE RATED WALL
- PARTITION WALL
- PARTITION - 3-5/8" STUD - SEE A7.0 FOR MATERIAL FINISH 1HR FIRE RATED WALL
- MASONRY - 8" CMU WALL
- REINFORCED PARTITION 3-5/8" OR 6" STUD SEE TYP. PARTITION WALL DETAIL A-7.0

KEY NOTES

- WALL TYPE SEE SHEET A-7.0
- # DOOR TYPE SHEE SHEET A-6.1
- # WINDOW TYPE SEE SHEET A-6.0

FLOOD VENT CALCULATION

CRAWL SPACE AREA= 1,565 SF
FLOOD VENT AREA REQUIRED= 1,565 SQ.IN.
8 X 16 SCREENED FLOOD VENT @ 8" A.F.G.= 55 SQ.IN.
FLOOD VENTS REQUIRED= 29 = (1565 / 55)
FLOOD VENTS PROVIDED= 30

* NOTES:
ALL ELECTRICAL, MECHANICAL AND PLUMBING EQUIPMENT MUST BE AT OR ABOVE BASE FLOOD ELEVATION
ALL MATERIALS USED BELOW BASE FLOOD ELEVATION 8'-0" N.G.V.D. MUST BE FLOODPROOFING MATERIALS

DRAWN BY:

REVISIONS:
1 01.31.07
2 10.13.06

3DESIGN INC.
ANTHONY LEON
ARCHITECT
AR0009612
4300 BISCAYNE BLVD. SUITE#204 MIAMI, FL 33137 T.305.438.9577 F.305.438.9578

SEAL

NEW BUILDING FOR
1529 JEFFERSON AVE
MIAMI BEACH, FL
33139

VOID
CITY OF MIAMI BEACH
APPROVED FOR PERMIT BY THE FOLLOWING:
BUILDING: tm 3/6/07
ZONING:
DRB/PB:
HISTORIC:
PLUMBING:
ELECTRICAL:
MECHANICAL: Rhode 5/25/07
FIRE PREVENTION:
ENGINEERING:
PUBLIC WORKS:
STRUCTURAL:
ACCESSIBILITY:
ELEVATOR:

CITY OF MIAMI BEACH

A-2.1
JUNE 6, 2006

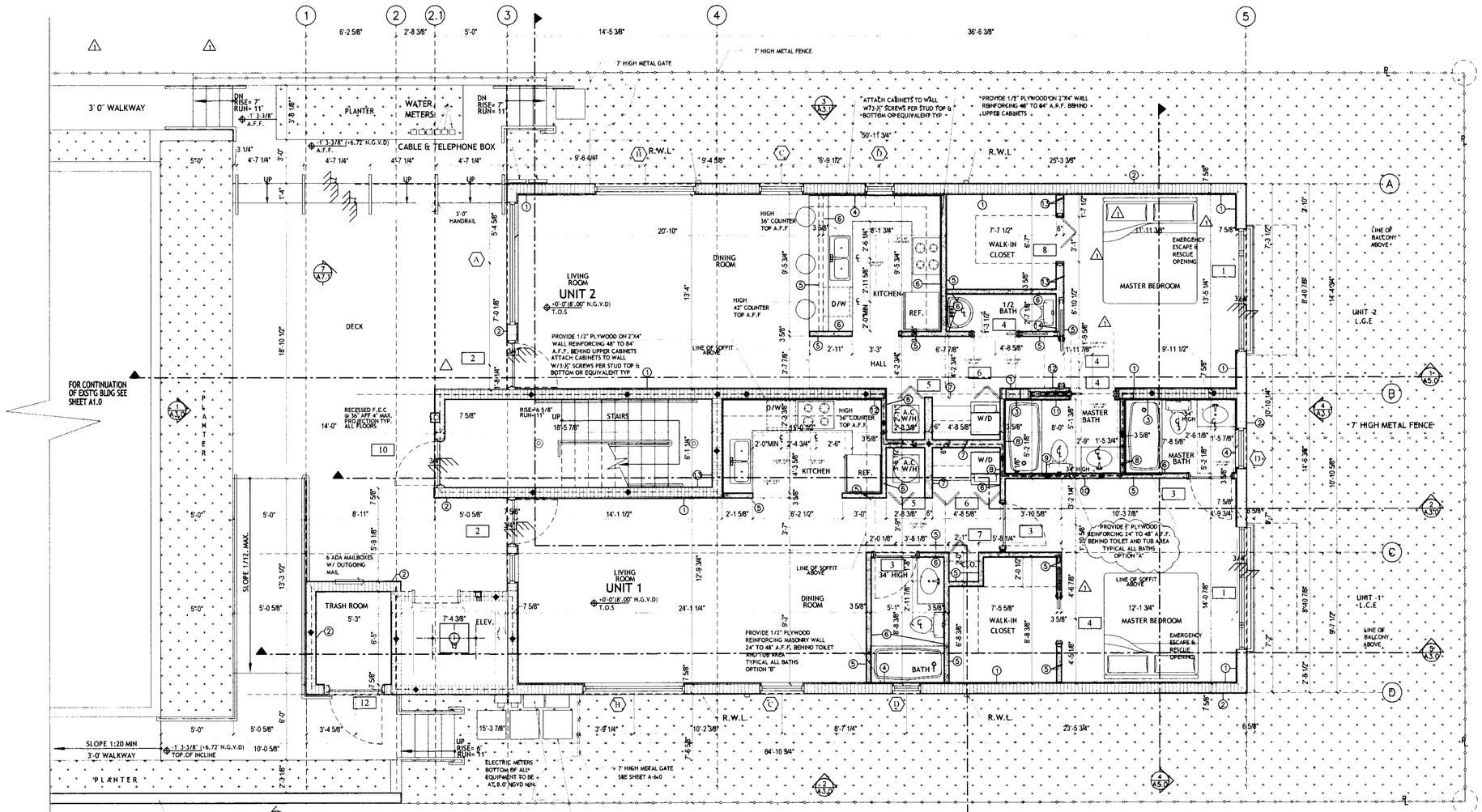

FIRST FLOOR PLAN

SCALE: 1/4" = 1'-0"

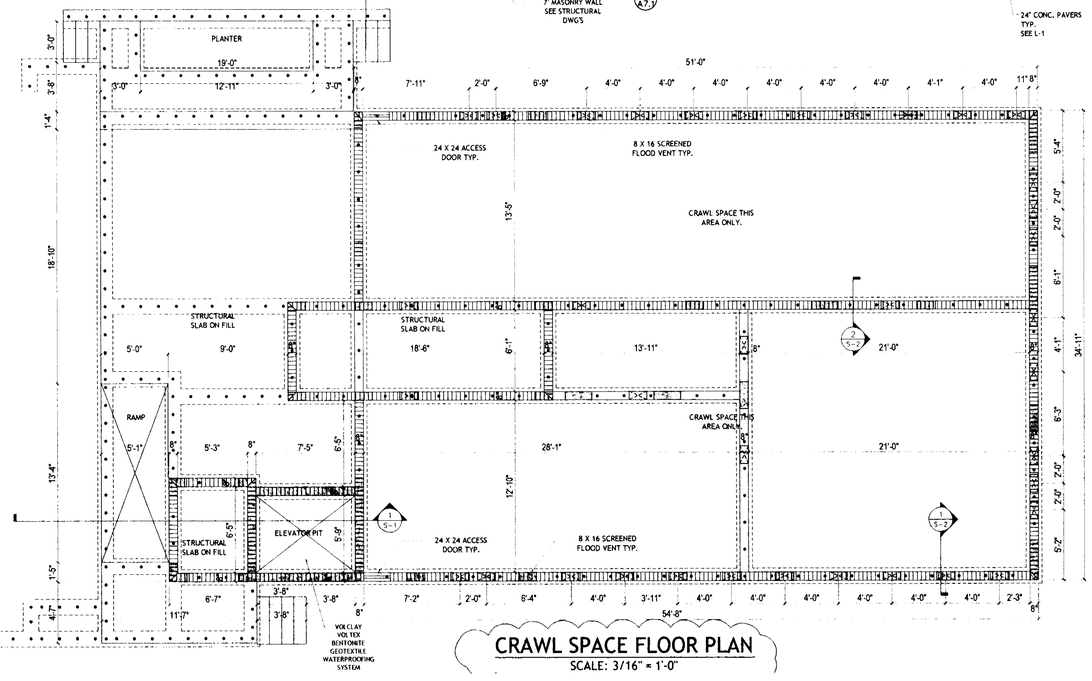

CRAWL SPACE FLOOR PLAN

SCALE: 3/16" = 1'-0"

DOOR SCHEDULE:

#	SIZE	THICK	MATERIAL	FRAME	GLASS	TYPE	NOTES
1	6'-8 3/4" X 7'-0"		GLASS/ALUM	ALUM		SL	FIXED/SLIDING SEE DOOR ELEV
2	3'-0"X7'-0"	1 3/4"	WOOD	ALUM		SW	
3	2'-10" X 7'-0"	1 3/8"	WOOD			SW	
4	2'-10" X 7'-0"	1 3/8"	WOOD			PK	TO PROVIDE 32" CLR. OPENING
5	2'-8" X 7'-0"	1 3/8"	METAL			BF	FRAMELESS
6	4'-8" X 7'-0"	1 3/8"	METAL			BF	FRAMELESS
7	2' X 7'-0"	1 3/8"	METAL			BF	FRAMELESS
8	3'-0"X 7'-0"	1 3/8"	METAL			BF	FRAMELESS
9	2'-3"X7'-0"	1 3/8"	METAL			BF	FRAMELESS
10	3'-0"X7'-0"	1 3/4"	METAL			SW	SELF-CLOSING
11	3'-0"X7'-0"	1 3/4"	METAL			SW	SELF-CLOSING
12	3'-8"X7'-0"	1 3/4"	METAL			SW	

NOTE: ALL EXTERIOR DOORS UNDER SEPARATE PERMIT

WINDOW SCHEDULE:

#	SIZE	HEAD	GLASS	TYPE	FINISH	NOTES
A	8'-4 3/4" X 7'-2"	7'-2"	IMPACT	FIXED	ALUM	
B	6'-11 7/8" x 7'-2"	7'-2"	IMPACT	FIXED/SL	ALUM	
C	3'-1" x 7'-2"	7'-2"	IMPACT	FIXED/CA	ALUM	
D	2'-0" x 3'-6 7/8"	2'-0"	IMPACT	CASE	ALUM	

ALL WINDOWS TO BE UNDER SEPARATE PERMIT

WALL LEGEND

- MASONRY 8"- 1HR FIRE RATED WALL
- PARTITION WALL
- PARTITION - 3-5/8" STUD - SEE A7.0 FOR MATERIAL FINISH 1HR FIRE RATED WALL
- MASONRY - 8" CMU WALL
- REINFORCED PARTITION 3-5/8" OR 6" STUD SEE TYP. PARTITION WALL DETAIL A-7.0

KEY NOTES

- (#) WALL TYPE SEE SHEET A-7.0
- [#] DOOR TYPE SHEE SHEET A-6.1
- ⟨#⟩ WINDOW TYPE SEE SHEET A-6.0

FLOOD VENT CALCULATION

CRAWL SPACE AREA= 1,565 SF
FLOOD VENT AREA REQUIRED= 1.565 SQ.IN.
8 X 16 SCREENED FLOOD VENT @ 8" A.F.G.= 55 SQ.IN.
FLOOD VENTS REQUIRED= 29 - (1565 / 55)
FLOOD VENTS PROVIDED= 30

* NOTES:

ALL ELECTRICAL, MECHANICAL AND PLUMBING EQUIPMENT MUST BE AT OR ABOVE BASE FLOOD ELEVATION

ALL MATERIALS USED BELOW BASE FLOOD ELEVATION 8'-0" N.G.V.D MUST BE FLOODPROOFING MATERIALS

CITY OF MIAMI BEACH

3DESIGN Inc
ANTHONY LEON
AR0015752
ARCHITECTURE
4500 BISCAYNE BLVD. SUITE #004 MIAMI, FL 33137 T 305 438 9377 F 305 438 9378

DRAWN BY:

REVISIONS:

1 10.13.06

SEAL

NEW BUILDING FOR 1529 JEFFERSON AVE MIAMI BEACH, FL 33139

A-2.1

JUNE 6, 2006

DRAWN BY:

REVISIONS:

DOOR SCHEDULE:

#	SIZE	THICK	MATERIAL	FRAME	GLASS	TYPE	NOTES
1	6'11" X 7'0"		GLASS/ALUMINUM			SL	FIXED/SLIDING
2	3'0"X7'0"	1 3/4"	WOOD			SW	
3	2'10" X 7'0"	1 3/4"	WOOD			SW	
4	2'8" X 7'0"	1 3/4"	WOOD			PK	
5	2' 7 3/8" X 7' 0"		METAL			BF	FRAMELESS
6	5' 2-1/4" X 7'0"		METAL			BF	FRAMELESS
7	2' X 7'0"		METAL			BF	FRAMELESS
8	3'9 X 7'0"		METAL			BF	FRAMELESS
9	3'0"X7'0"	1 3/4"	WOOD			SW	
10	3'0"X7'0"	1 3/4"	METAL			SW	
11	2'2 1/2"X7'0"	1 3/4"	METAL			BI	FRAMELESS
12	2'4"X7'0"	1 3/4"	METAL			SW	

NOTE: ALL EXTERIOR DOORS UNDER SEPARATE PERMIT

WINDOW SCHEDULE:

#	SIZE	HEAD	GLASS	TYPE	FINISH	NOTES
A	6' 11" X 4' 2"		IMPACT	FIXED	ALUM	
B	7' 0" x 7' 0"	7' 0"	IMPACT	FIXED	ALUM	
C	3' 1" x 7' 0"	3' 1"	IMPACT	FIXED	ALUM	
D	2' 0" x 2' 2"	2' 0"	IMPACT	SH	ALUM	TOP OPERATED

ALL WINDOWS TO BE UNDER SEPARATE PERMIT

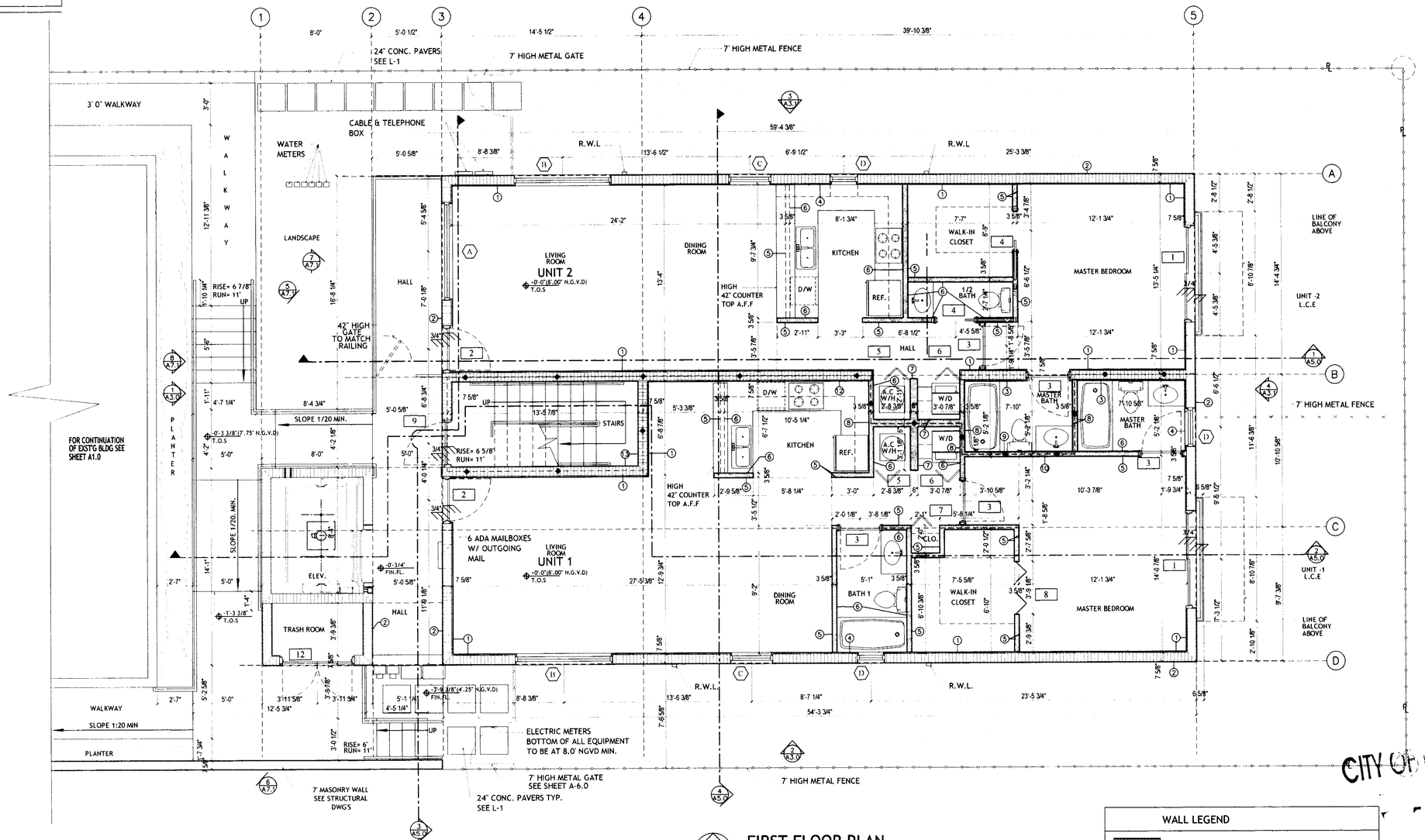

FIRST FLOOR PLAN

SCALE: 1/4" = 1'-0"

WALL LEGEND

- MASONRY 8"- 1HR FIRE RATED WALL
- PARTITION WALL
- PARTITION - 3-5/8" STUD - SEE A2.0 FOR MATERIAL FINISH 1HR FIRE RATED WALL
- MASONRY - 8" CMU WALL

KEY NOTES

- (#) WALL TYPE SEE SHEET A-7.0
- [#] DOOR TYPE SHEE SHEET A-6.1
- (#) WINDOW TYPE SEE SHEET A-6.0

3DESIGN INC
ANTHONY LEON
ARCHITECTURE
4500 BISCAYNE BLVD. SUITE#204 MIAMI, FL 33137 T:305.458.3577 F:305.458.9378

SEAL

NEW BLDG
FOR
1529 JEFFERSON AVE
MIAMI BEACH, FL
33139

OFFICE COPY
CITY OF MIAMI BEACH
APPROVED FOR PERMIT BY
THE FOLLOWING:

BUILDING:
ZONING:
PLANNING:
CONCURRENCY:
PLUMBING:
ELECTRICAL:
MECHANICAL:
FIRE PREVENTION:
ENGINEERING:
PUBLIC WORKS:
STRUCTURAL:

CITY OF MIAMI BEACH

A-2.1

JUNE 6, 2006

DRAWN BY:

REVISIONS:

10.13.06

DOOR SCHEDULE:

#	SIZE	THICK	MATERIAL	FRAME	GLASS	TYPE	NOTES
1	6'-8-3/4"X7'0"		GLASS/ALUM	ALUM		SL	FIXED/SLIDING SEE DOOR ELEV
2	3'0"X7'0"	1 3/4"	WOOD	ALUM		SW	
3	2'-10"X7'0"	1 3/8"	WOOD			SW	
4	2'-10"X7'0"	1 3/8"	WOOD			PK	TO PROVIDE 32" CLR. OPENING
5	2'-4"X7'0"	1 3/8"	METAL			PK	LOUVERED
6	2'-8"X7'0"	1 3/8"	METAL			BI	FRAMELESS
7	1'-6"X7'0"	1 3/8"				PK	
8	3'0"X7'0"	1 3/8"	METAL			BI	FRAMELESS
9	2'-4"X7'0"	1 3/8"	METAL			BI	LOUVERED
10	3'0"X7'0"	1 3/4"	METAL			SW	SELF-CLOSING
11	3'0"X7'0"	1 3/4"	METAL			SW	SELF-CLOSING
12	3'-8"X7'0"	1 3/4"	METAL			SW	
13	2'-2"X7'0"	1 3/4"	METAL			BI	LOUVERED

NOTE: ALL EXTERIOR DOORS UNDER SEPARATE PERMIT

WINDOW SCHEDULE:

#	SIZE	HEAD	GLASS	TYPE	FINISH	NOTES
A	8'-4 3/4"X7'-2"	7'-2"	IMPACT	FIXED	ALUM	
B	6'-11 7/8"X7'-2"	7'-2"	IMPACT	FIXED/SL	ALUM	
C	3'-1"X7'-2"	7'-2"	IMPACT	FIXED/CA	ALUM	
D	2'-0"X3'-6 7/8"	2'-0"	IMPACT	CASE	ALUM	

ALL WINDOWS TO BE UNDER SEPARATE PERMIT

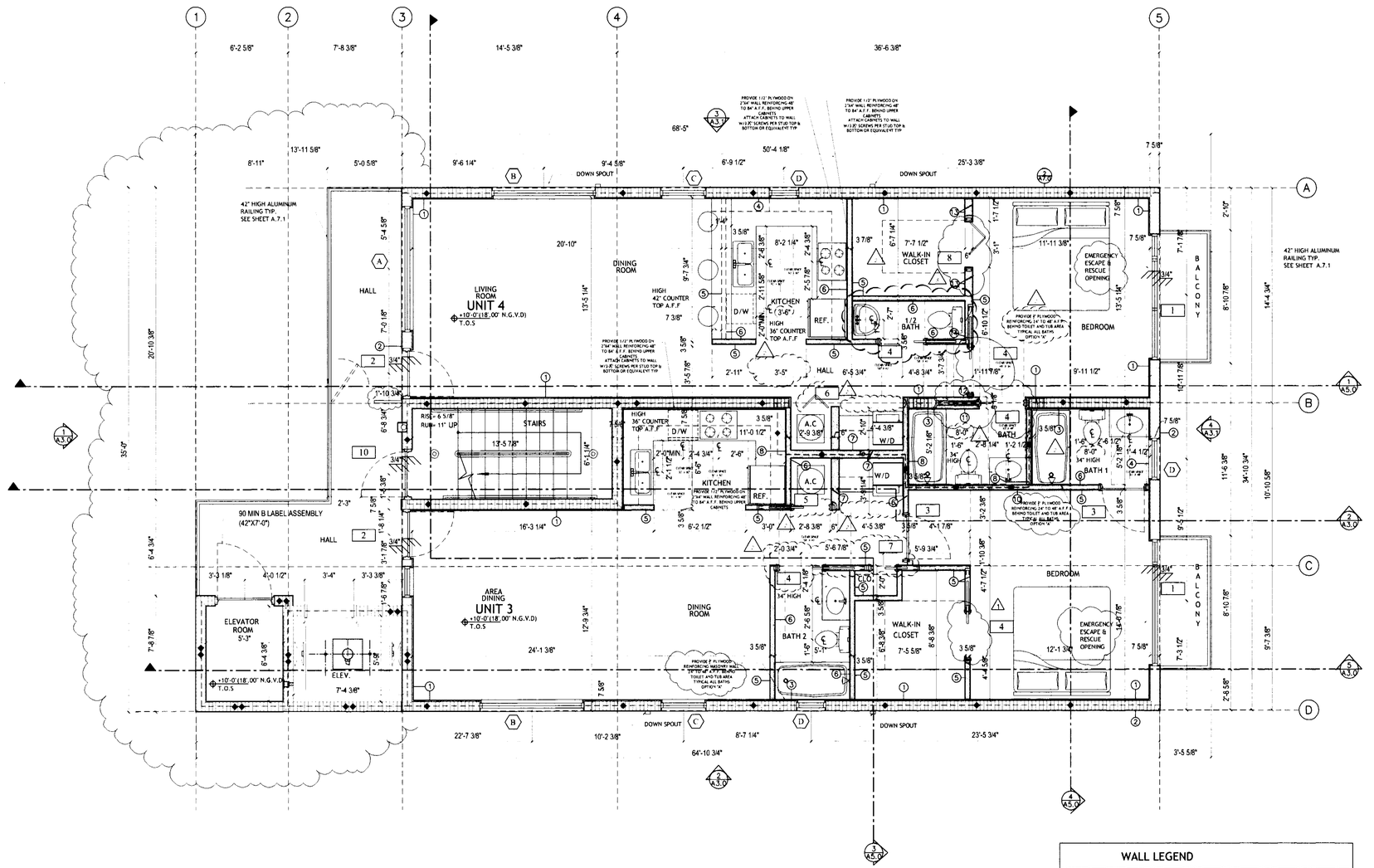

SECOND FLOOR PLAN

SCALE: 1/4" = 1'-0"

WALL LEGEND

- MASONRY 8" - 1HR FIRE RATED
- PARTITION WALL
- PARTITION - 3-5/8" STUD - SEE A7.0 FOR MATERIAL FINISH 1HR FIRE RATED WALL
- MASONRY - 8" CMU WALL
- REINFORCED PARTITION 3-5/8" OR 6" STUD SEE TYP. PARTITION WALL DETAIL A-7.0

KEY NOTES

- WALL TYPE SEE SHEET A-7.0
- DOOR TYPE SHEE SHEET A-6.1
- WINDOW TYPE SEE SHEET A-6.0

3DESIGN, INC
ANTHONY LEON
A3006752
ARCHITECTURE
4500 BISCAYNE BLVD. SUITE#G04 MIAMI, FL 33137 T.305.458.9577 F.305.458.9579

SEAL

NEW BUILDING
FOR
1529 JEFFERSON AVE
MIAMI BEACH, FL
33139

A 2.2

JUNE 6, 2006

DRAWN BY:

REVISIONS:

01-31-07

10.13.06

DOOR SCHEDULE:

#	SIZE	THICK	MATERIAL	FRAME	GLASS	TYPE	NOTES
1	6' 8-3/4" X 7'0"		GLASS/ALUM	ALUM		SL	FIXED/SLIDING SEE DOOR ELEV
2	3'0"X7'0"	1 3/4"	WOOD	ALUM		SW	
3	2' 10" X 7'0"	1 3/8"	WOOD			SW	
4	2' 10" X 7'0"	1 3/8"	WOOD			PK	TO PROVIDE 32" CLR. OPENING
5	2' 4" X 7'0"	1 3/8"	METAL			PK	LOUVERED
6	2' 8" X 7'0"	1 3/8"	METAL			BF	FRAMELESS
7	1'-6" X 7'0"	1 3/8"				PK	
8	3'0"X 7'0"	1 3/8"	METAL			BF	FRAMELESS
9	2'-4"X7'0"	1 3/8"	METAL			BF	LOUVERED
10	3'0"X7'0"	1 3/4"	METAL			SW	SELF-CLOSING
11	3'-0"X7'0"	1 3/4"	METAL			SW	SELF-CLOSING
12	3'-8"X7'0"	1 3/4"	METAL			SW	
13	2'-2"X7'0"	1 3/4"	METAL			BF	LOUVERED

NOTE: ALL EXTERIOR DOORS UNDER SEPARATE PERMIT

WINDOW SCHEDULE:

#	SIZE	HEAD	GLASS	TYPE	FINISH	NOTES
A	8' 4 3/4" X 7' 2"	7' 2"	IMPACT	FIXED	ALUM	
B	6' 11 7/8" x 7' 2"	7' 2"	IMPACT	FIXED/SL	ALUM	
C	3' 1" x 7' 2"	7' 2"	IMPACT	FIXED/CA	ALUM	
D	2' 0" x 3' 6 7/8"	2' 0"	IMPACT	CASE	ALUM	

ALL WINDOWS TO BE UNDER SEPARATE PERMIT

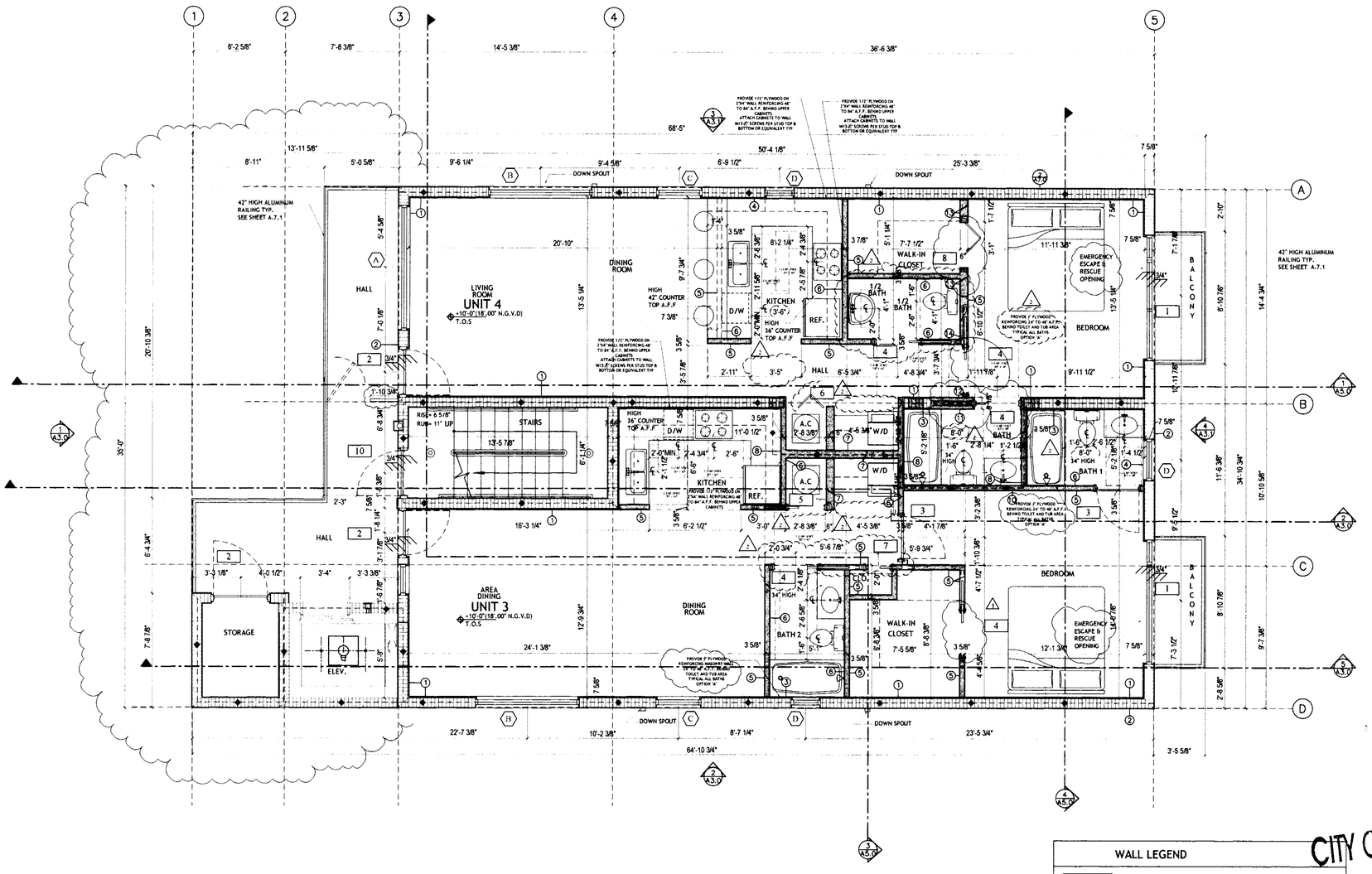

SECOND FLOOR PLAN

SCALE: 1/4" = 1'-0"

WALL LEGEND

- MASONRY 8" -1HR FIRE RATED
- PARTITION WALL
- PARTITION - 3-5/8" STUD - SEE A7.0 FOR MATERIAL FINISH 1HR FIRE RATED WALL
- MASONRY - 8" CMU WALL
- REINFORCED PARTITION 3-5/8" OR 6" STUD SEE TYP. PARTITION WALL DETAIL A-7.0

KEY NOTES

- WALL TYPE SEE SHEET A-7.0
- DOOR TYPE SHEE SHEET A-6.1
- WINDOW TYPE SEE SHEET A-6.0

3D DESIGN INC
ANTHONY LEON
ARCHITECTURE
4500 BISCAYNE BLVD. SUITE #604 MIAMI, FL 33137 T.305.438.9377 F.305.438.9378

SEAL

NEW BUILDING FOR
1529 JEFFERSON AVE
MIAMI BEACH, FL
33139

VOID
CITY OF MIAMI BEACH
By: Ueda 5/25/07

VOID

A 2.2

JUNE 6, 2006

DOOR SCHEDULE:

#	SIZE	THICK	MATERIAL	FRAME	GLASS	TYPE	NOTES
1	6'-8 3/4" X 7'0"		GLASS/ALUM.	ALUM		SL	FIXED/SLIDING SEE DOOR ELEV
2	3'0"X7'0"	1 3/4"	WOOD	ALUM		SW	
3	2'-10" X 7'0"	1 3/8"	WOOD			SW	
4	2'-10" X 7'0"	1 3/8"	WOOD			PK	TO PROVIDE 32" CLR. OPENING
5	2'-8" X 7'-0"	1 3/8"	METAL			BF	FRAMELESS
6	4'-8" X 7'0"	1 3/8"	METAL			BF	FRAMELESS
7	2'-X 7'0"	1 3/8"	METAL			BF	FRAMELESS
8	3'0"X 7'0"	1 3/8"	METAL			BF	FRAMELESS
9	2'-3"X7'0"	1 3/8"	METAL			BF	FRAMELESS
10	3'0"X7'0"	1 3/4"	METAL			SW	SELF-CLOSING
11	3'-0"X7'0"	1 3/4"	METAL			SW	SELF-CLOSING
12	3'-8"X7'0"	1 3/4"	METAL			SW	

NOTE: ALL EXTERIOR DOORS UNDER SEPARATE PERMIT

WINDOW SCHEDULE:

#	SIZE	HEAD	GLASS	TYPE	FINISH	NOTES
A	8'-4 3/4" X 7'-2"	7'-2"	IMPACT	FIXED	ALUM	
B	6'-11 7/8" x 7'-2"	7'-2"	IMPACT	FIXED/SL	ALUM	
C	3'-1" x 7'-2"	7'-2"	IMPACT	FIXED/CA	ALUM	
D	2'-0"x 3'-6 7/8"	2'-0"	IMPACT	CASE	ALUM	

ALL WINDOWS TO BE UNDER SEPARATE PERMIT

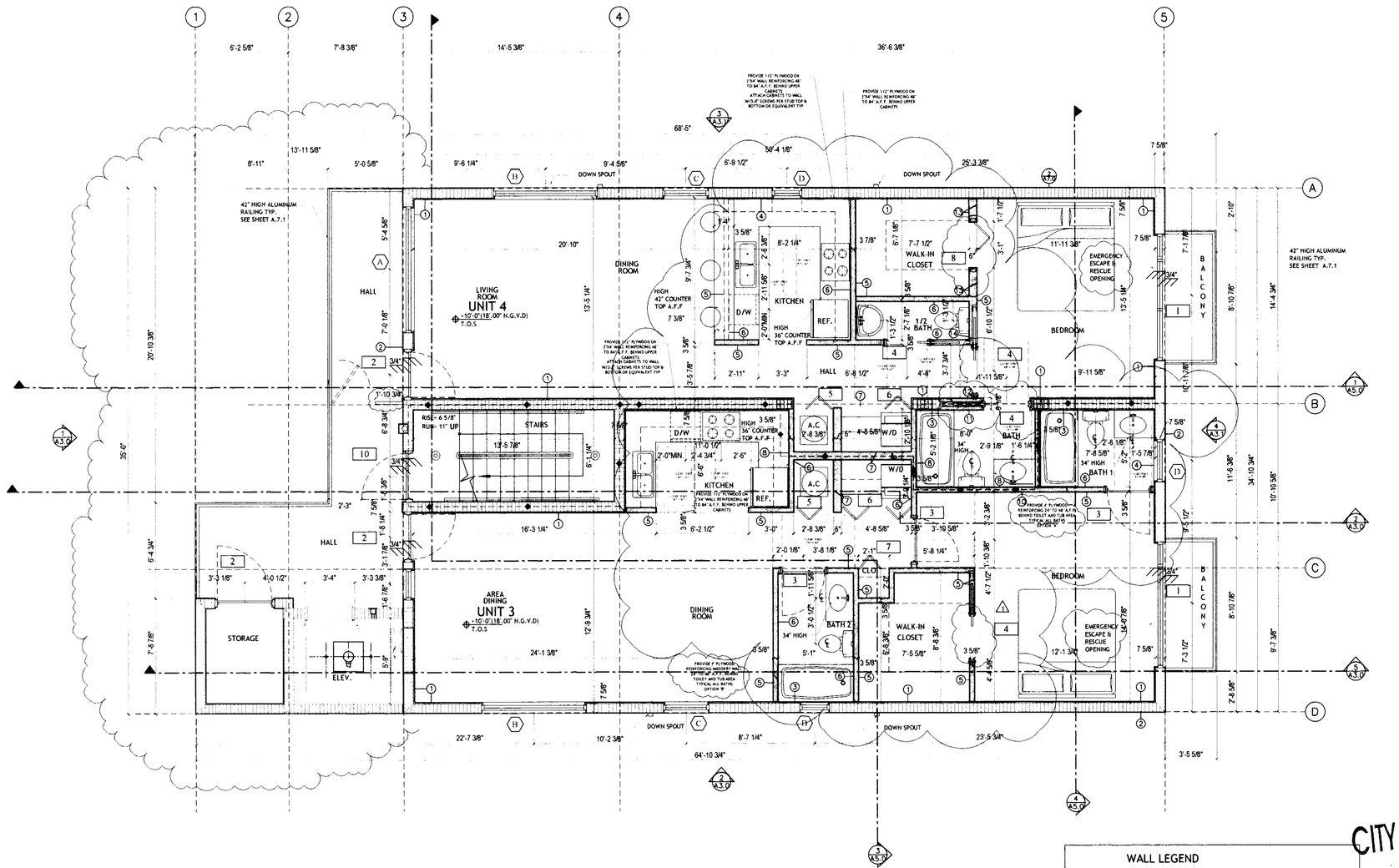

SECOND FLOOR PLAN
SCALE: 1/4" = 1'-0"

WALL LEGEND

- MASONRY 8" -1HR FIRE RATED
- PARTITION WALL
- PARTITION - 3-5/8" STUD - SEE A7.0 FOR MATERIAL FINISH 1HR FIRE RATED WALL
- MASONRY - 8" CMU WALL
- REINFORCED PARTITION 3-5/8" OR 6" STUD SEE TYP. PARTITION WALL DETAIL A-7.0

KEY NOTES

- WALL TYPE SEE SHEET A-7.0
- # DOOR TYPE SHEE SHEET A-6.1
- # WINDOW TYPE SEE SHEET A-6.0

DRAWN BY:

REVISIONS:

1 10.13.06

3DESIGN INC
ANTHONY LEON
ARCHITECTURE
AA26002652
4500 BISCAYNE BLVD. SUITE #204 MIAMI, FL 33137 T 305 458 8577 F 305 458 9578

10.10.06
SEAL

NEW BUILDING
FOR
1529 JEFFERSON AVE
MIAMI BEACH, FL
33139

CITY OF MIAMI BEACH

VOID

A 2.2

JUNE 6, 2006

DRAWN BY:

REVISIONS:

DOOR SCHEDULE:

#	SIZE	THICK	MATERIAL	FRAME	GLASS	TYPE	NOTES
1	6'11" X 7'0"		GLASS/ALUMINUM			SL	FIXED/SLIDING
2	3'0"X7'0"	1 3/4"	WOOD			SW	
3	2'10" X 7'0"	1 3/4"	WOOD			SW	
4	2'8" X 7'0"	1 3/4"	WOOD			PK	
5	2'7 3/8" X 7'0"		METAL			BI	FRAMELESS
6	3'-2-1/4" X 7'0"		METAL			BF	FRAMELESS
7	2' X 7'0"		METAL			BF	FRAMELESS
8	3'9 X 7'0"		METAL			BF	FRAMELESS
9	3'0"X7'0"	1 3/4"	WOOD			SW	
10	3'0"X7'0"	1 3/4"	METAL			SW	
11	2'2 1/2"X7'0"	1 3/4"	METAL			BI	FRAMELESS
12	2'4"X7'0"	1 3/4"	METAL			SW	

NOTE: ALL EXTERIOR DOORS UNDER SEPARATE PERMIT

WINDOW SCHEDULE:

#	SIZE	HEAD	GLASS	TYPE	FINISH	NOTES
A	6'11" X 4'2"		IMPACT	FIXED	ALUM	
B	7'0" x 7'0"	7'0"	IMPACT	FIXED	ALUM	
C	3'1" x 7'0"	3'1"	IMPACT	FIXED	ALUM	
D	2'0" x 2'2"	2'0"	IMPACT	SH	ALUM	TOP OPERATED

ALL WINDOWS TO BE UNDER SEPARATE PERMIT

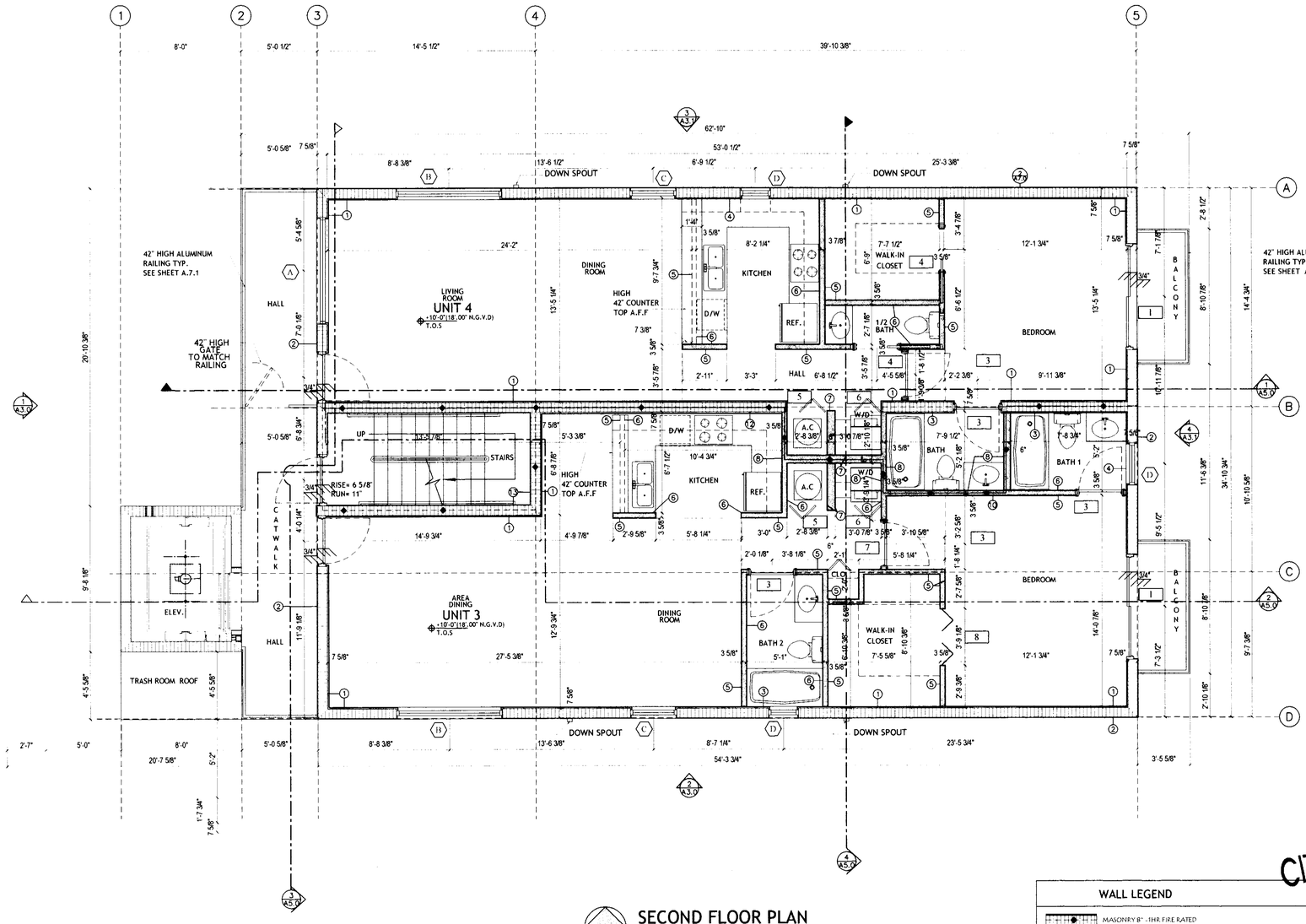

SECOND FLOOR PLAN

SCALE: 1/4" = 1'-0"

WALL LEGEND

- MASONRY 8" - 1HR FIRE RATED
- PARTITION WALL
- PARTITION - 3-5/8" STUD - SEE A7.0 FOR MATERIAL FINISH 1HR FIRE RATED WALL
- MASONRY - 8" CMU WALL

KEY NOTES

- WALL TYPE SEE SHEET A-7.0
- DOOR TYPE SHEE SHEET A-6.1
- WINDOW TYPE SEE SHEET A-6.0

3DESIGN INC.
ANTHONY LEON
ARCHITECTURE
4500 BISCAYNE BLVD. SUITE #604 MIAMI, FL 33137 T 305.438.9377 F 305.438.9378

SEAL

NEW BLGD FOR 1529 JEFFERSON AVE MIAMI BEACH, FL 33139

OFFICE CO...
CITY OF MI...
APPROVED ...
THI...
BUILDING:
ZONING:
ORB/HPB:
CONCURRENCY:
PLUMBING:
ELECTRICAL:
MECHANICAL:
FIRE PREVENTION:
ENGINEERING:
PUBLIC WORKS:
STRUCTURAL:
ACCESSIBILITY:
ELEVATOR:
As per Florida Building Code Section 104.5.
REVIEWED FOR CODE COMPLIANCE

CITY OF MIAMI BEACH

A 2.2

JUNE 6, 2006

DOOR SCHEDULE:

#	SIZE	THICK	MATERIAL	FRAME	GLASS	TYPE	NOTES
1	6'-8-3/4" X 7'0"		GLASS/ALUM.	ALUM		SL	FIXED/SLIDING SEE DOOR ELEV
2	3'0"X7'0"	1 3/4"	WOOD	ALUM		SW	
3	2'-10" X 7'0"	1 3/8"	WOOD			SW	
4	2'-10" X 7'0"	1 3/8"	WOOD			PK	(TO PROVIDE 32" CLR. OPENING)
5	2'-4" X 7'-0"	1 3/8"	METAL			PK	LOUVERED
6	2'-8" X 7'0"	1 3/8"	METAL			BF	FRAMELESS
7	1'-6" X 7'0"	1 3/8"				PK	
8	3'0"X 7'0"	1 3/8"	METAL			BF	FRAMELESS
9	2'-4"X7'0"	1 3/8"	METAL			BF	LOUVERED
10	3'0"X7'0"	1 3/4"	METAL			SW	SELF. CLOSING
11	3'0"X7'0"	1 3/4"	METAL			SW	SELF.-CLOSING
12	3'-8"X7'0"	1 3/4"	METAL			SW	
13	2'-2"X7'0"	1 3/4"	METAL			BF	LOUVERED

NOTE: ALL EXTERIOR DOORS UNDER SEPARATE PERMIT

WINDOW SCHEDULE:

#	SIZE	HEAD	GLASS	TYPE	FINISH	NOTES
A	8'-4 3/4" X 7'-2"	7'-2"	IMPACT	FIXED	ALUM	
B	6'-11 7/8" x 7'-2"	7'-2"	IMPACT	FIXED/SL	ALUM	
C	3'-1" x 7'-2"	7'-2"	IMPACT	FIXED/CA	ALUM	
D	2'-0" x 3'-6 7/8"	2'-0"	IMPACT	CASE	ALUM	

ALL WINDOWS TO BE UNDER SEPARATE PERMIT

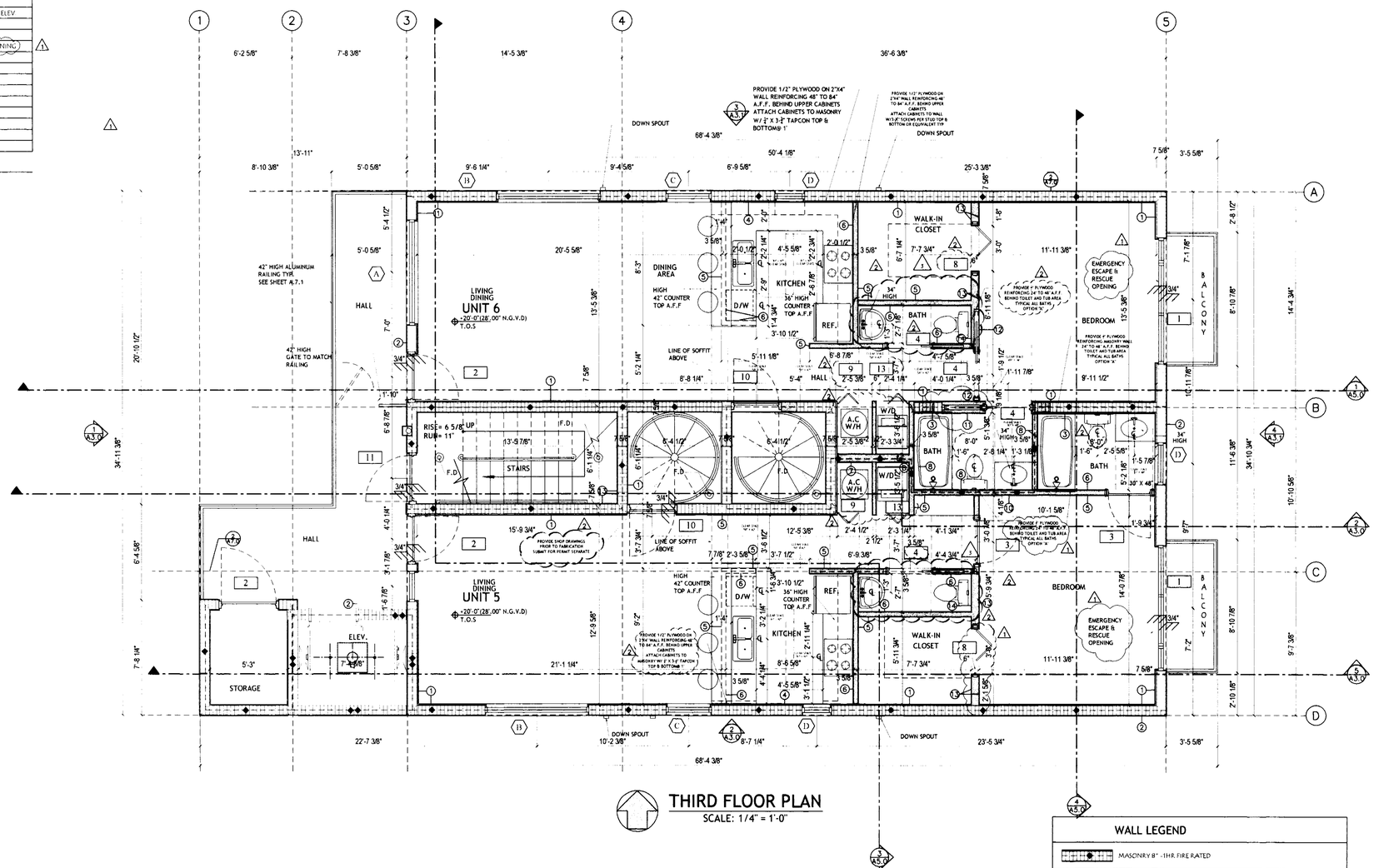

THIRD FLOOR PLAN
SCALE: 1/4" = 1'-0"

WALL LEGEND

- MASONRY 8" -1HR. FIRE RATED
- PARTITION WALL
- PARTITION - 3-5/8" STUD - SEE A7.0 FOR MATERIAL FINISH 1HR. FIRE RATED WALL
- MASONRY - 8" CMU WALL
- REINFORCED PARTITION 3-5/8" OR 6" STUD SEE TYP. PARTITION WALL DETAIL A-7.0

KEY NOTES

- WALL TYPE SEE SHEET A-7.0
- # DOOR TYPE SHEE SHEET A-6.1
- WINDOW TYPE SEE SHEET A-6.0

DRAWN BY:

REVISIONS:

3 03-06-07
2 01-31-07
1 10.13.06

3DESIGN INC.
ANTHONY LEON
AR0026572
ARCHITECTURE
4500 BISCAYNE BLVD. SUITE#204 MIAMI, FL 33137 T.305.458.9377 F.305.458.9579

SEAL

NEW BUILDING
FOR
1529 JEFFERSON AVE
MIAMI BEACH, FL
33139

A2.3

JUNE 6, 2006

DOOR SCHEDULE:

#	SIZE	THICK	MATERIAL	FRAME	GLASS	TYPE	NOTES
1	6'-8-3/4" X 7'0"		GLASS/ALUM	ALUM		SL	FIXED/SLIDING SEE DOOR ELEV
2	3'0"X7'0"	1 3/4"	WOOD	ALUM		SW	
3	2'-10" X 7'-0"	1 3/8"	WOOD			SW	
4	2'-10" X 7'-0"	1 3/8"	WOOD			PK	TO PROVIDE 32" CLR. OPENING
5	2'-4" X 7'-0"	1 3/8"	METAL			PK	LOUVERED
6	2'-8" X 7'-0"	1 3/8"	METAL			BF	FRAMELESS
7	1'-6' X 7'-0"	1 3/8"				PK	
8	3'-0"X 7'-0"	1 3/8"	METAL			BF	FRAMELESS
9	2'-4"X7'0"	1 3/8"	METAL			BF	LOUVERED
10	3'0"X7'0"	1 3/4"	METAL			SW	SELF-CLOSING
11	3'-0"X7'0"	1 3/4"	METAL			SW	SELF-CLOSING
12	3'-8"X7'0"	1 3/4"	METAL			SW	
13	2'-2"X7'0"	1 3/4"	METAL			BF	LOUVERED

NOTE: ALL EXTERIOR DOORS UNDER SEPARATE PERMIT

WINDOW SCHEDULE:

#	SIZE	HEAD	GLASS	TYPE	FINISH	NOTES
A	8'-4 3/4" X 7'-2"	7'-2"	IMPACT	FIXED	ALUM	
B	6'-11 7/8" x 7'-2"	7'-2"	IMPACT	FIXED/SL	ALUM	
C	3'-1" x 7'-2"	7'-2"	IMPACT	FIXED/CA	ALUM	
D	2'-0" x 5'-6 7/8"	2'-0"	IMPACT	CASE	ALUM	

ALL WINDOWS TO BE UNDER SEPARATE PERMIT

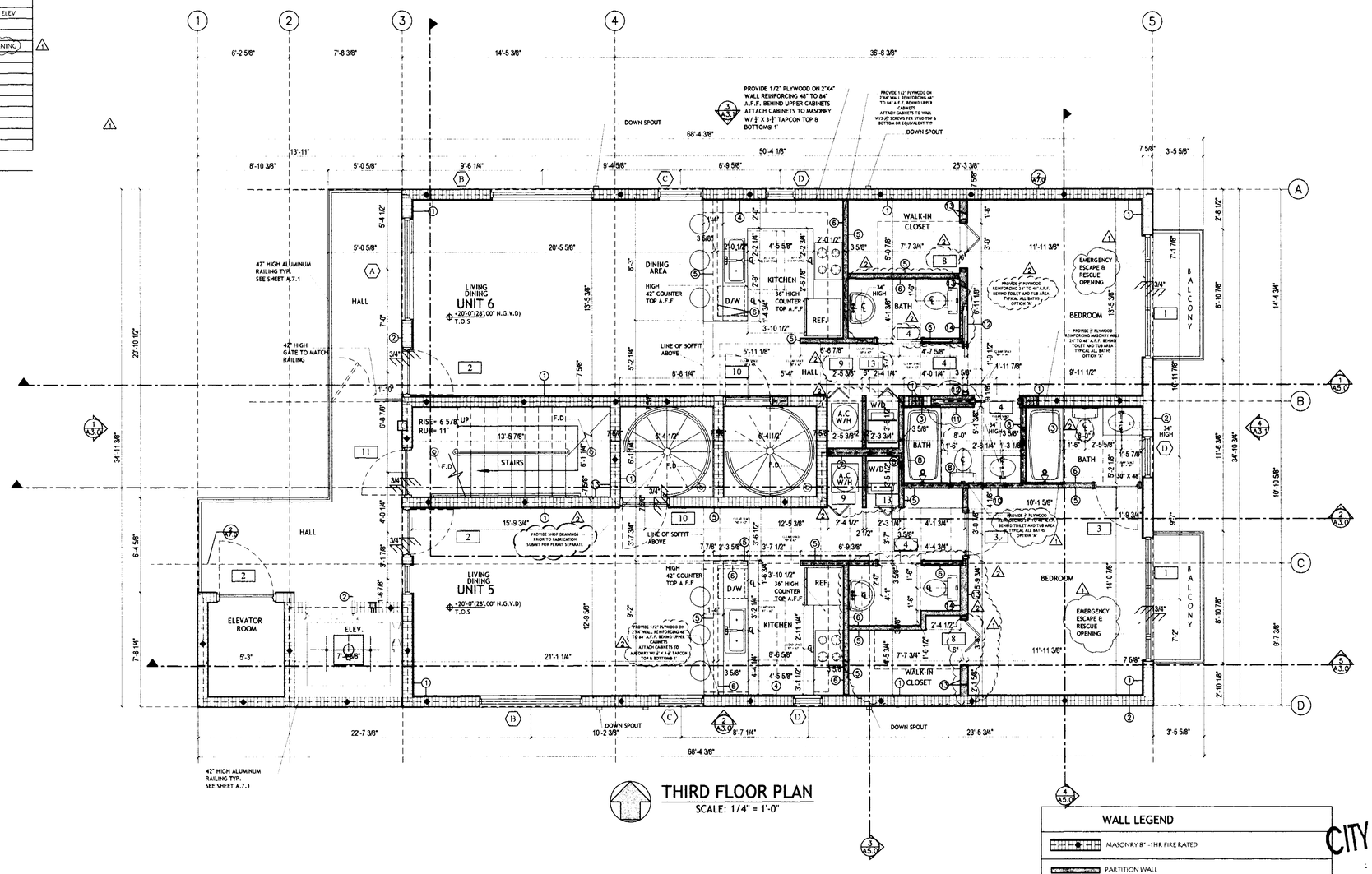

THIRD FLOOR PLAN
SCALE: 1/4" = 1'-0"

WALL LEGEND

- MASONRY 8" - 1HR FIRE RATED
- PARTITION WALL
- PARTITION - 3-5/8" STUD - SEE A7.0 FOR MATERIAL FINISH 1HR FIRE RATED WALL
- MASONRY - 8" CMU WALL
- REINFORCED PARTITION 3-5/8" OR 6" STUD SEE TYP. PARTITION WALL DETAIL A-7.0

KEY NOTES

- (#) WALL TYPE SEE SHEET A-7.0
- [#] DOOR TYPE SHEE SHEET A-6.1
- <#> WINDOW TYPE SEE SHEET A-6.0

DRAWN BY:

REVISIONS:

1 01-31-07
1 10.13.06

3DESIGN INC
ANTHONY LEON
AR0006752
ARCHITECTURE
4500 BISCAYNE BLVD. SUITE#G04 MIAMI, FL 33157 T.305.458.9377 F.305.458.9378

SEAL

NEW BUILDING FOR
1529 JEFFERSON AVE
MIAMI BEACH, FL
33139

VOID

BY:

CITY OF MIAMI BEACH JUN 12 2007

A2.3

JUNE 6, 2006

DOOR SCHEDULE:

#	SIZE	THICK	MATERIAL	FRAME	GLASS	TYPE	NOTES
1	6'-8-3/4" X 7'-0"		GLASS/ALUM	ALUM		SL	FIXED/SLIDING SEE DOOR ELEV
2	3'-0"X7'-0"	1 3/4"	WOOD	ALUM		SW	
3	2'-10" X 7'-0"	1 3/8"	WOOD			SW	
4	2'-10" X 7'-0"	1 3/8"	WOOD			PK	(E) PROVIDE 32" CLR. OPENING
5	2'-8" X 7'-0"	1 3/8"	METAL			BF	FRAMELESS
6	4'-8" X 7'-0"	1 3/8"	METAL			BF	FRAMELESS
7	2'-X 7'-0"	1 3/8"	METAL			BF	FRAMELESS
8	3'-0"X 7'-0"	1 3/8"	METAL			BF	FRAMELESS
9	2'-3"X7'-0"	1 3/8"	METAL			BF	FRAMELESS
10	3'-0"X7'-0"	1 3/4"	METAL			SW	SELF - CLOSING
11	3'-0"X7'-0"	1 3/4"	METAL			SW	SELF - CLOSING
12	3'-8"X7'-0"	1 3/4"	METAL			SW	

NOTE: ALL EXTERIOR DOORS UNDER SEPARATE PERMIT

WINDOW SCHEDULE:

#	SIZE	HEAD	GLASS	TYPE	FINISH	NOTES
A	8'-4 3/4" X 7'-2"	7'-2"	IMPACT	FIXED	ALUM	
B	6'-11 7/8" X 7'-2"	7'-2"	IMPACT	FIXED/SL	ALUM	
C	3'-1" X 7'-2"	7'-2"	IMPACT	FIXED/CA	ALUM	
D	2'-0" x 5'-6 7/8"	2'-0"	IMPACT	CASE	ALUM	

ALL WINDOWS TO BE UNDER SEPARATE PERMIT

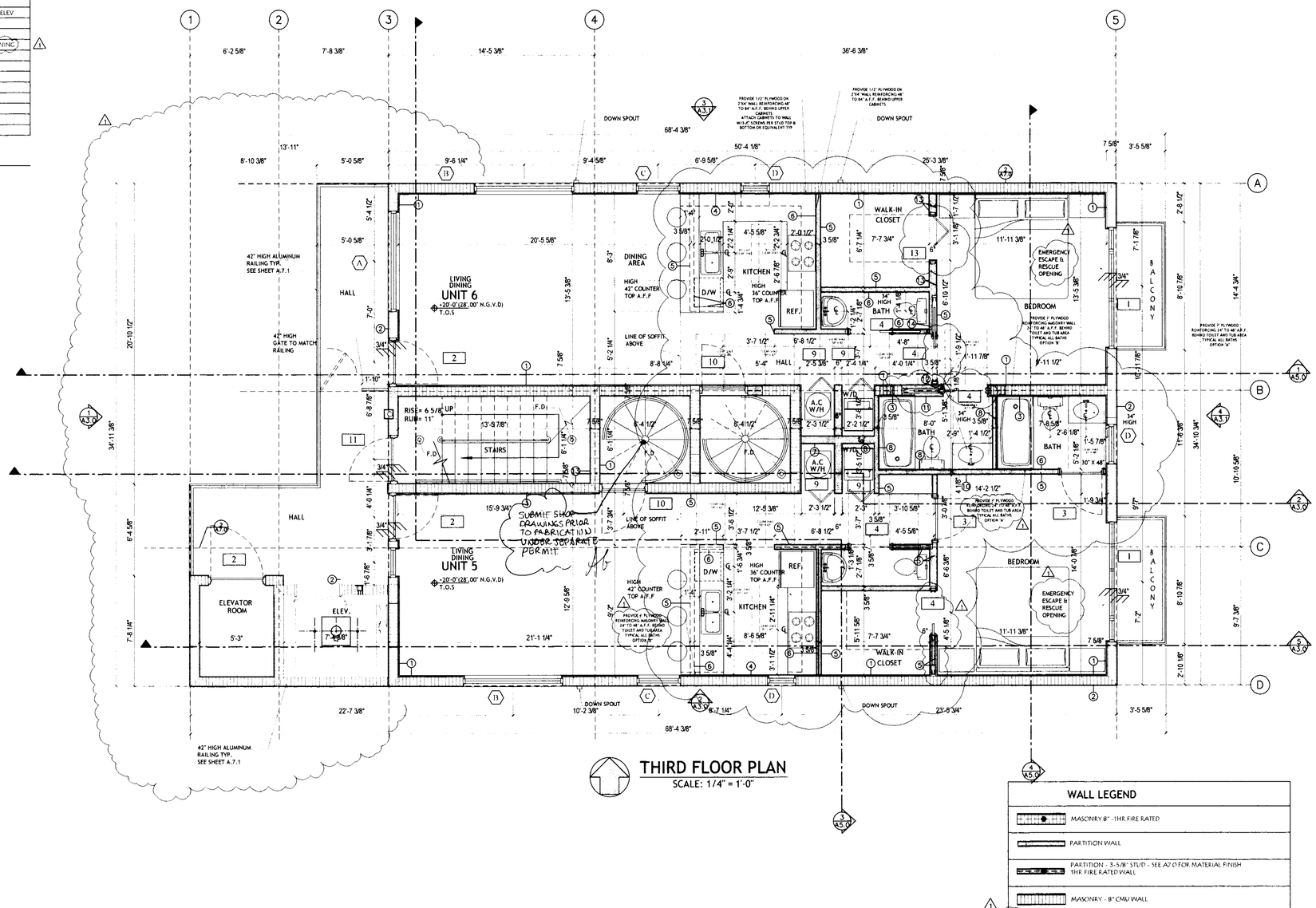

THIRD FLOOR PLAN
SCALE: 1/4" = 1'-0"

WALL LEGEND

- MASONRY 8" - 1HR. FIRE RATED
- PARTITION WALL
- PARTITION - 3-5/8" STUD - SEE A7.0 FOR MATERIAL FINISH 1HR. FIRE RATED WALL
- MASONRY - 8" CMU WALL
- REINFORCED PARTITION 3-5/8" OR 6" STUD SEE TYP. PARTITION WALL DETAIL A-7.0

KEY NOTES

- (#) WALL TYPE SEE SHEET A-7.0
- [#] DOOR TYPE SHEE SHEET A-6.1
- <#> WINDOW TYPE SEE SHEET A-6.0

DRAWN BY:

REVISIONS:

1 10.13.06

3DESIGN INC
ANTHONY LEON
ARCHITECTURE
4500 BISCAYNE BLVD. SUITE#604 MIAMI, FL 33137 T.305.458.9377 F.305.458.9578

SEAL

NEW BUILDING
FOR
1529 JEFFERSON AVE
MIAMI BEACH, FL
33139

CITY OF MIAMI BEACH

VOID

A2.3

JUNE 6, 2006

DOOR SCHEDULE:

#	SIZE	THICK	MATERIAL	FRAME	GLASS	TYPE	NOTES
1	6'11" X 7'0"		GLASS/ALUMINUM			SL	FIXED/SLIDING
2	3'0"X7'0"	1 3/4"	WOOD			SW	
3	2'10" X 7'0"	1 3/4"	WOOD			SW	
4	2'8" X 7'0"	1 3/4"	WOOD			PK	
5	2' 7 3/8" X 7' 0"		METAL			BF	FRAMELESS
6	3' 2-1/4" X 7'0"		METAL			BF	FRAMELESS
7	2' X 7'0"		METAL			BF	FRAMELESS
8	3'9 X 7'0"		METAL			BF	FRAMELESS
9	3'0"X7'0"	1 3/4"	WOOD			SW	
10	3'0"X7'0"	1 3/4"	METAL			SW	
11	2'2 1/2"X7'0"	1 3/4"	METAL			BI	FRAMELESS
12	2'4"X7'0"	1 3/4"	METAL			SW	

NOTE: ALL EXTERIOR DOORS UNDER SEPARATE PERMIT

WINDOW SCHEDULE:

#	SIZE	HEAD	GLASS	TYPE	FINISH	NOTES
A	6' 11" X 4' 2"		IMPACT	FIXED	ALUM	
B	7' 0" x 7' 0"	7' 0"	IMPACT	FIXED	ALUM	
C	3' 1" x 7' 0"	3' 1"	IMPACT	FIXED	ALUM	
D	2' 0" x 2' 2"	2' 0"	IMPACT	SH	ALUM	TOP OPERATED

ALL WINDOWS TO BE UNDER SEPARATE PERMIT

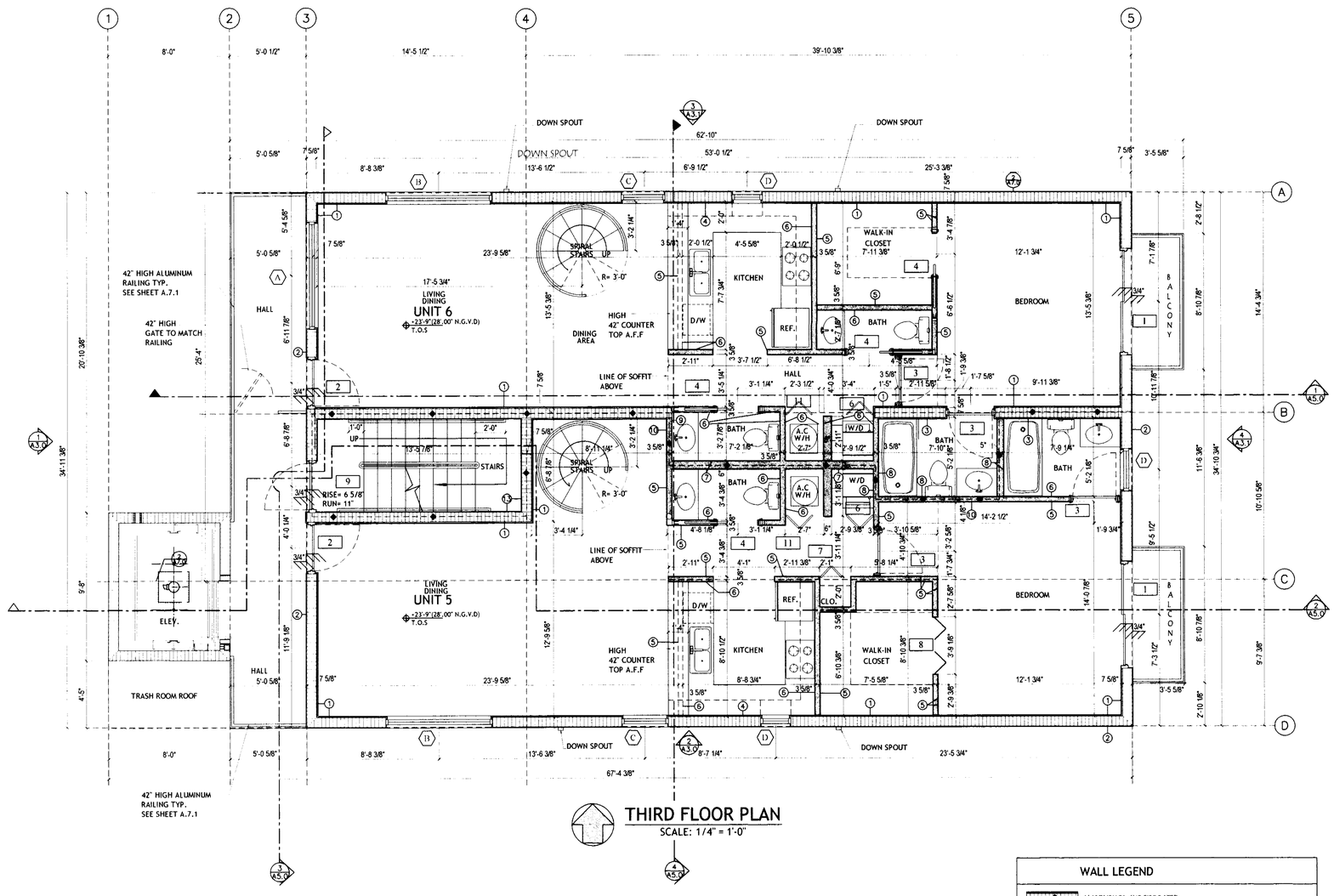

THIRD FLOOR PLAN

SCALE: 1/4" = 1'-0"

WALL LEGEND

- MASONRY 8" -1HR FIRE RATED
- PARTITION WALL
- PARTITION - 3-5/8" STUD - SEE A7.01 FOR MATERIAL FINISH 1HR. FIRE RATED WALL
- MASONRY - 8" CMU WALL

KEY NOTES

- WALL TYPE SEE SHEET A-7.0
- DOOR TYPE SHEE SHEET A-6.1
- WINDOW TYPE SEE SHEET A-6.0

DRAWN BY:

REVISIONS:

3DESIGN INC
ANTHONY LEON
ARCHITECTURE
AR0018752
4500 BISCAYNE BLVD. SUITE#604 MIAMI, FL 33137 T 305 458 9377 F 305 458 9376

SEAL

NEW BLGD
FOR
1529 JEFFERSON AVE
MIAMI BEACH, FL
33139

OFFICE COPY
CITY OF MIAMI BEACH
APPROVED FOR PERMIT BY
THE FOLLOWING:

BUILDING:
ZONING:
ORB/HPB:
CONCURRENCY:
PLUMBING:
ELECTRICAL:
MECHANICAL:
FIRE PREVENTION:
ENGINEERING:
PLANNING:

CITY OF MIAMI BEACH

A2.3

JUNE 6, 2006

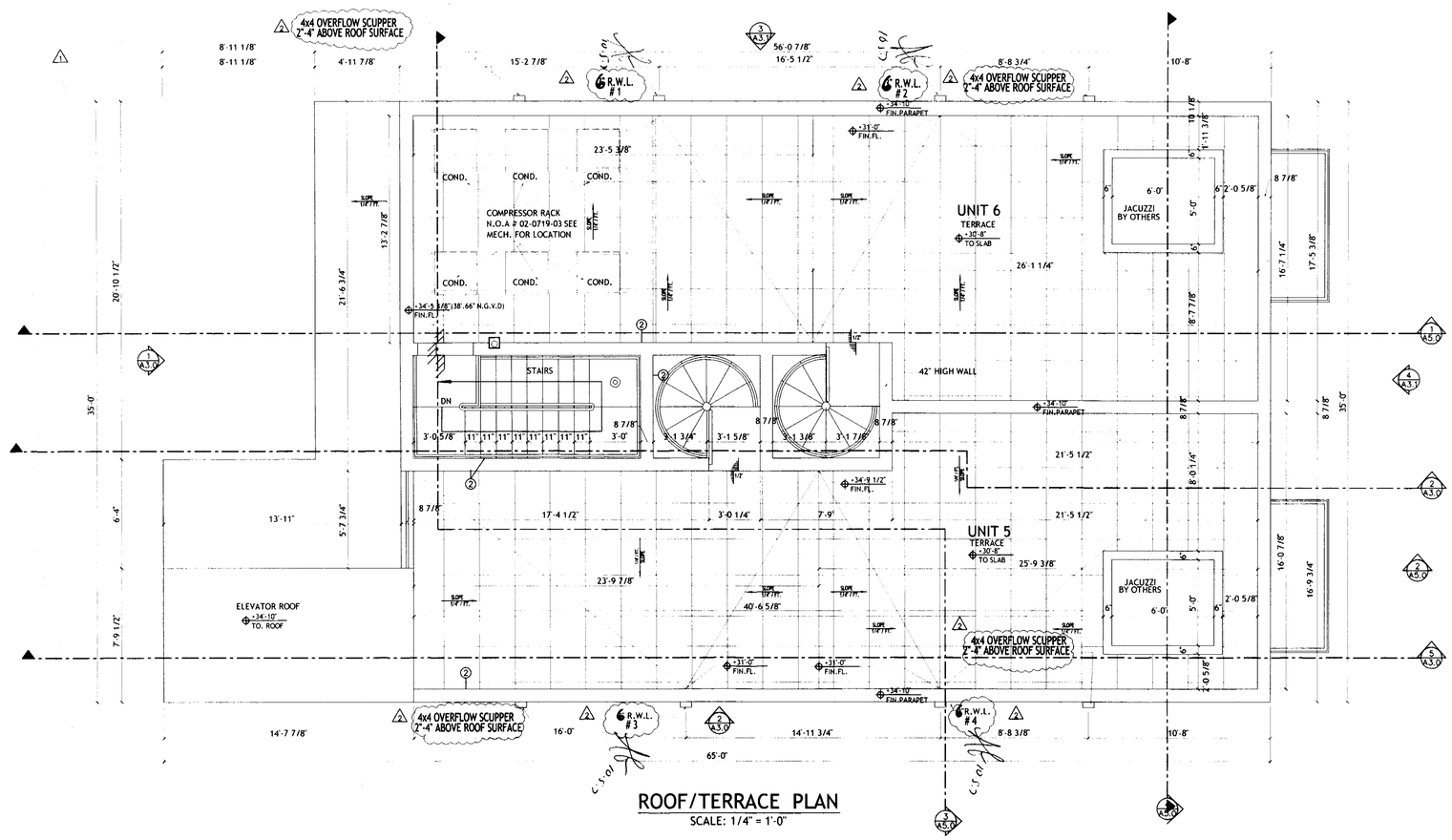

ROOF/TERRACE PLAN

SCALE: 1/4" = 1'-0"

VERTICAL LEADER SIZE CHART		
DRAIN #	DRAINED ROOF AREA	MIN. LEADER AND OVERFLOW SCUPPER DIAMETER
R.W.L. #1	310 SF	2"
R.W.L. #2	417 SF	2"
R.W.L. #3	302 SF	2"
R.W.L. #4	399 SF	2"

WALL LEGEND
MASONRY 8" -1HR FIRE RATED
PARTITION WALL
PARTITION - 3-5/8" STUD - SEE A7.0 FOR MATERIAL FINISH 1HR FIRE RATED WALL
MASONRY - 8" CMU WALL
KEY NOTES
(#) WALL TYPE SEE SHEET A-7.0
DOOR TYPE SHEE SHEET A-6.1
WINDOW TYPE SEE SHEET A-6.0

DRAWN BY:

REVISIONS:

2 06-04-07
1 10.13.06

3DESIGN INC
ARCHITECTURE
ANTHONY LEON
ARCHITECT
4500 BISCAYNE BLVD SUITE#404 MIAMI, FL 33137 T.305.458.9577 F.305.458.9579

SEAL

NEW BUILDING FOR
1529 JEFFERSON AVE
MIAMI BEACH, FL
33139

A-2.4

JUNE 6, 2006

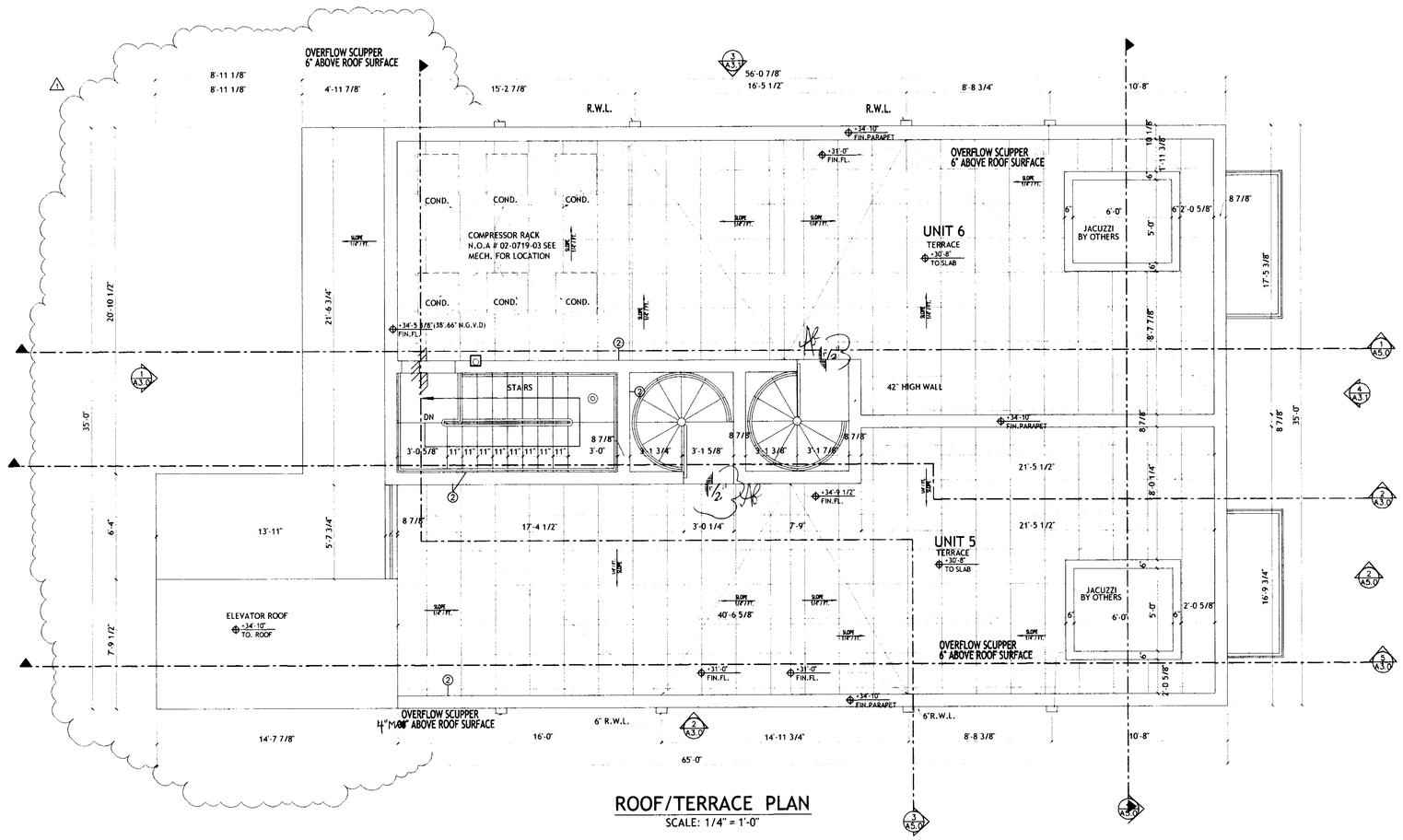

ROOF/TERRACE PLAN

SCALE: 1/4" = 1'-0"



WALL LEGEND	
	MASONRY 8" - 1HR FIRE RATED
	PARTITION WALL
	PARTITION - 3-5/8" STUD - SEE A7.0 FOR MATERIAL FINISH 1HR FIRE RATED WALL
	MASONRY - 8" CMU WALL

KEY NOTES	
#	WALL TYPE SEE SHEET A-7.0
#	DOOR TYPE SHEE SHEET A-6.1
#	WINDOW TYPE SEE SHEET A-6.0

DRAWN BY:

REVISIONS:

1 10.13.06

3DESIGN, INC.
ANTHONY LEON
ARCHITECTURE
4300 BISCAYNE BLVD. SUITE #604 MIAMI, FL 33137 T.305.458.9577 F.305.458.9578

SEAL

NEW BUILDING
FOR
1529 JEFFERSON AVE
MIAMI BEACH, FL
33139

VOID

OFFICE COPY
CITY OF MIAMI BEACH
APPROVED FOR PERMIT BY
THIS DRAWING:
BUILDING: 3/6/07
ZONING: JUN
DRB/HPB:
CONCURRENCY:
PLUMBING:
ELECTRICAL: Slide 5/25/7
MECHANICAL:
FIRE PREVENTION:
ENGINEERING:
PUBLIC WORKS:
STRUCTURAL:

CITY OF MIAMI BEACH

Code Section 104.5.3

A-2.4

JUNE 6, 2006

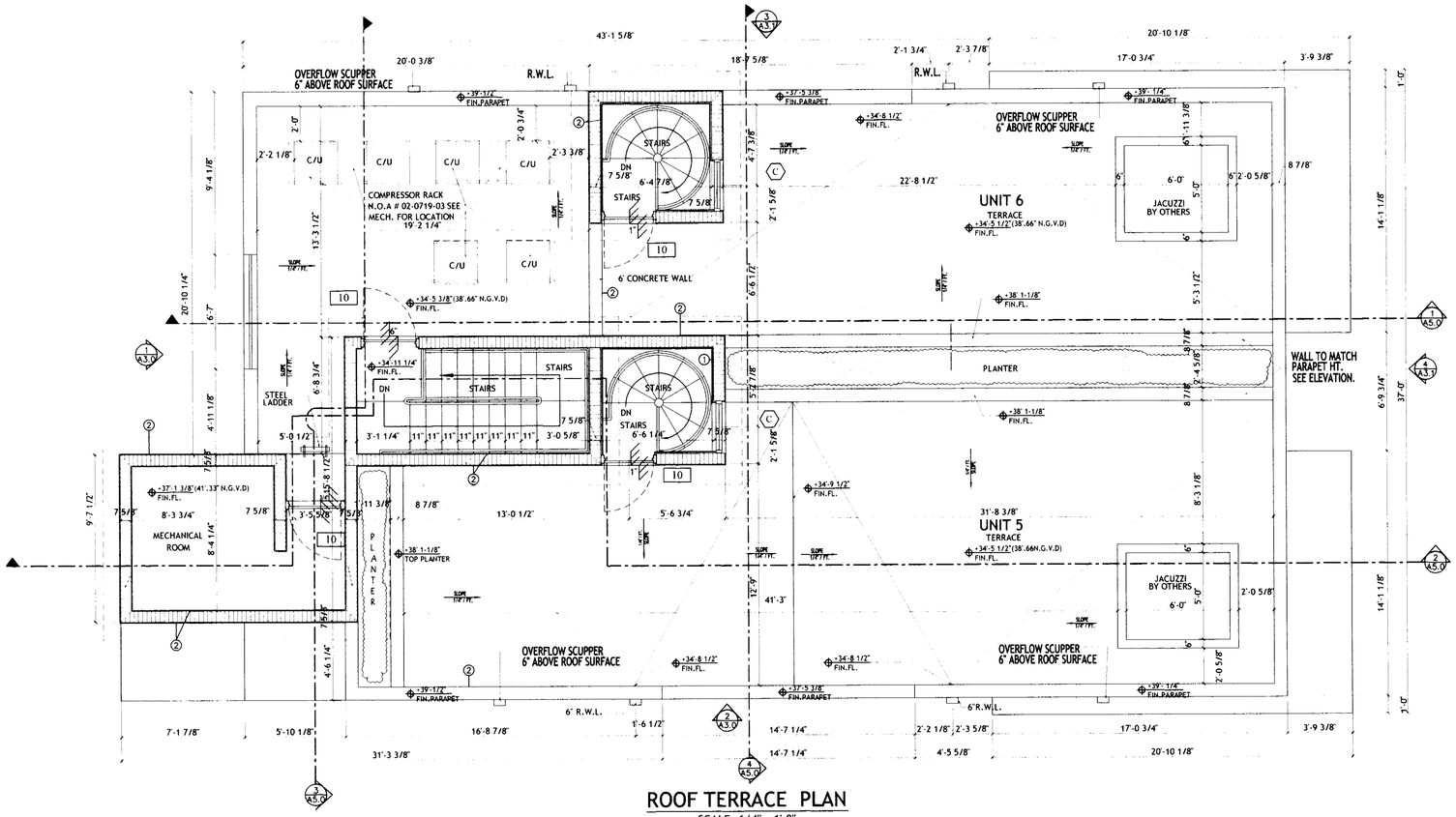

ROOF TERRACE PLAN

SCALE: 1/4" = 1'-0"

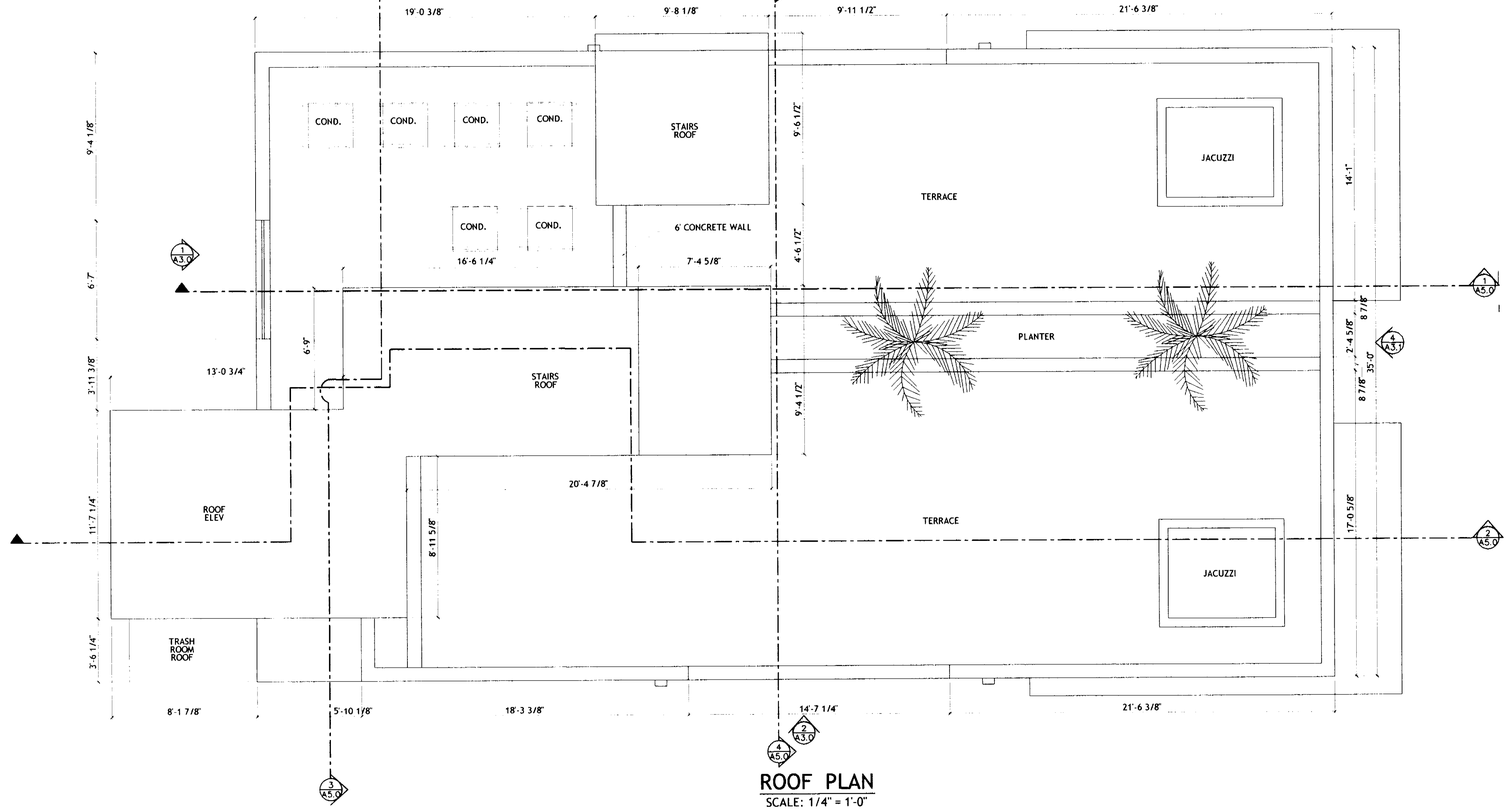

ROOF PLAN

SCALE: 1/4" = 1'-0"

DRAWN BY:

REVISIONS:

3DESIGN INC
ANTHONY LEON
AR0005752
ARCHITECTURE
4300 BISCAYNE BLVD. SUITE #604 MIAMI, FL 33137 T.305.438.9577 F.305.438.9578

SEAL

NEW BLGD
FOR
1529 JEFFERSON AVE
MIAMI BEACH, FL
33139

OFFICE COPY
CITY OF MIAMI BEACH
APPROVED FOR PERMIT BY
THE FOLLOWING:

BUILDING:
ZONING:
DRB/HPB:
CONCURRENCY:
PLUMBING:
ELECTRICAL:
MECHANICAL:
FIRE PREVENTION:
ENGINEERING:
PUBLIC WORKS:
STRUCTURAL:
ACCESSIBILITY:
ELEVATOR:

CITY OF MIAMI BEACH

Florida Building Code Section 104.5.3

WALL LEGEND

- MASONRY 8" - 1HR FIRE RATED
- PARTITION WALL
- PARTITION - 3-5/8" STUD - SEE A7.0 FOR MATERIAL FINISH 1HR FIRE RATED WALL
- MASONRY - 8" CMU WALL

KEY NOTES

- WALL TYPE SEE SHEET A-7.0
- DOOR TYPE SHEE SHEET A-6.1
- WINDOW TYPE SEE SHEET A-6.0

A-2.4

JUNE 6, 2006

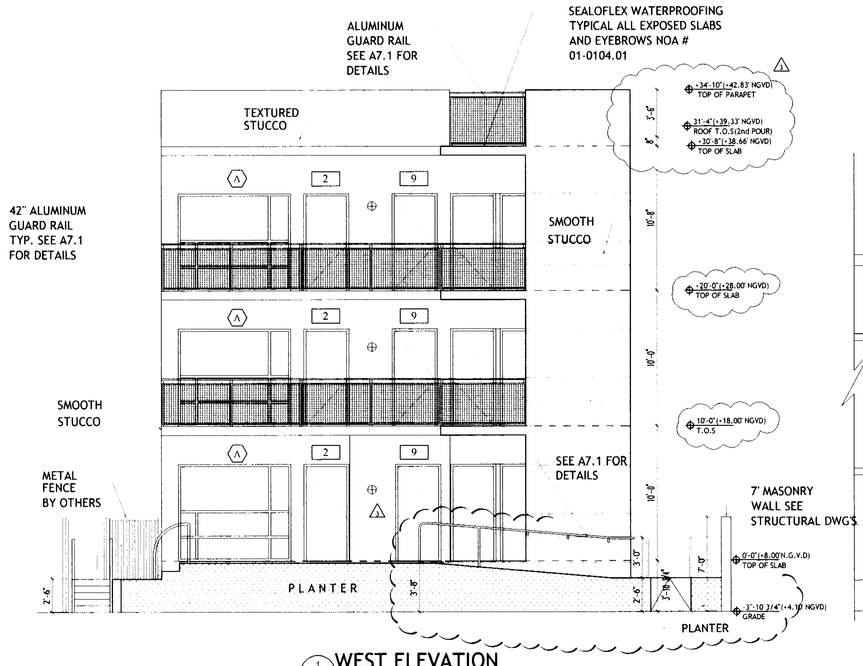

1 A3.0 **WEST ELEVATION**
SCALE: 3/16" = 1'-0"

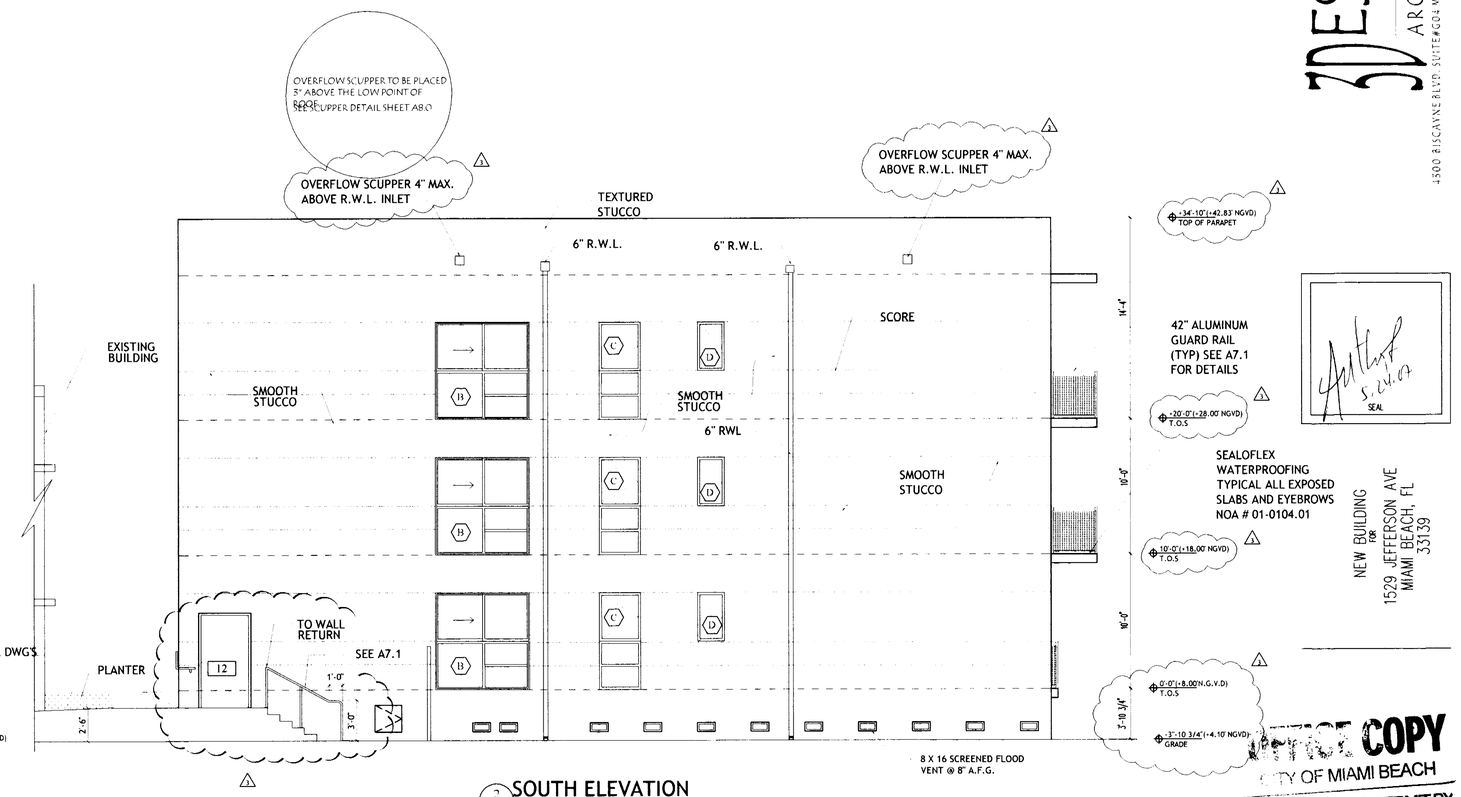

2 A5.0 **SOUTH ELEVATION**
SCALE: 3/16" = 1'-0"

DRAWN BY:

REVISIONS:

1 04-13-07
2 01.31.07
1 10-13-06

3DESIGN INC.
ANTHONY LEON
AR0014572
ARCHITECTURE
4300 BISCAYNE BLVD. SUITE#604 MIAMI, FL 33137 T.305.438.9577 F.305.438.9579

NEW BUILDING FOR 1529 JEFFERSON AVE MIAMI BEACH, FL 33139

SEAL

OFFICE COPY
CITY OF MIAMI BEACH
APPROVED FOR PERMIT BY THE FOLLOWING:
12 JUN
Hide 5/25/7
STRUCTURAL:
ACCESSIBILITY:

A-3.0

JUNE 6, 2006

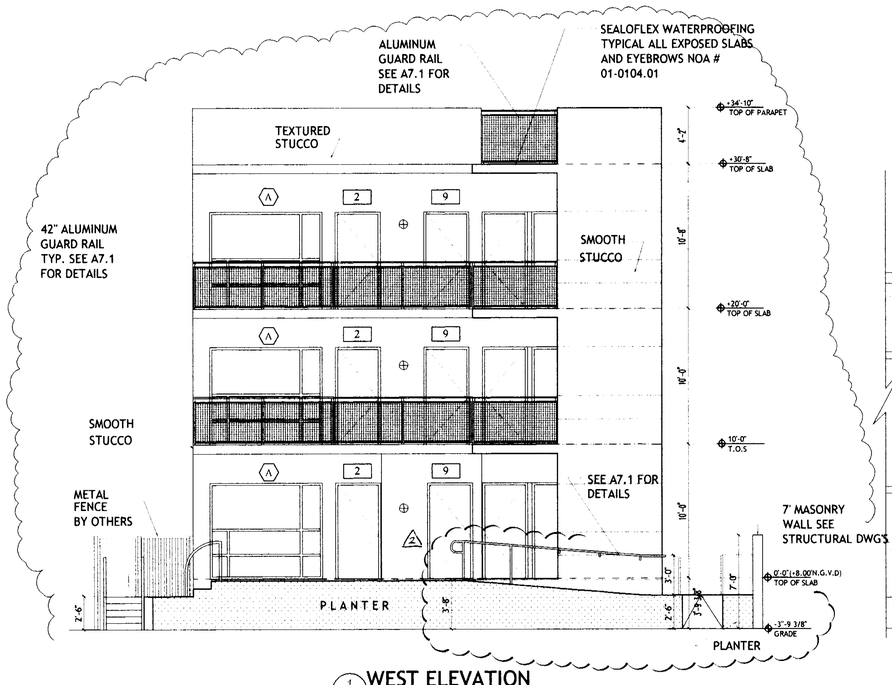

1 A3.0 **WEST ELEVATION**
SCALE: 3/16" = 1'-0"

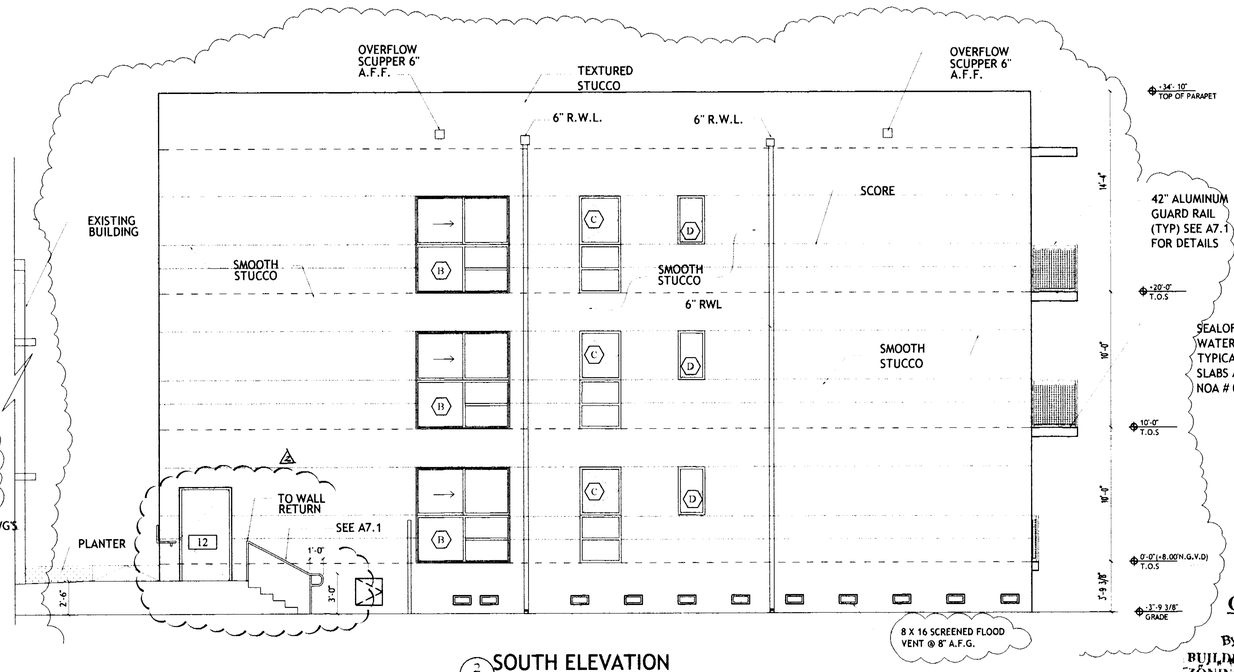

2 A3.0 **SOUTH ELEVATION**
SCALE: 3/16" = 1'-0"

DRAWN BY:

REVISIONS:

2 01.31.07

1 10-13-06

3DESIGN INC
ANTHONY LEON
ARCHITECTURE
A0006752
4500 BISCAYNE BLVD. SUITE#404 MIAMI, FL 33137 T 305.438.9377 F 305.438.9378

SEAL

NEW BUILDING FOR
1529 JEFFERSON AVE
MIAMI BEACH, FL
33139

VOID

CITY OF MIAMI BEACH
APPROVED FOR PERMIT
By: [illegible] 3/6/07

BUILDING:
ZONING:
DRB/HPB:
CONCURRENCY:
PLUMBING:
ELECTRICAL:
MECHANICAL:
FIRE PREVENTION:
ENGINEERING:
PUBLIC WORKS:
STRUCTURAL:
ACCESSIBILITY:
ELEVATOR:

As per Building Code Section 104.5.3
REVIEWED FOR COMPLIANCE

A-3.0

JUNE 6, 2006

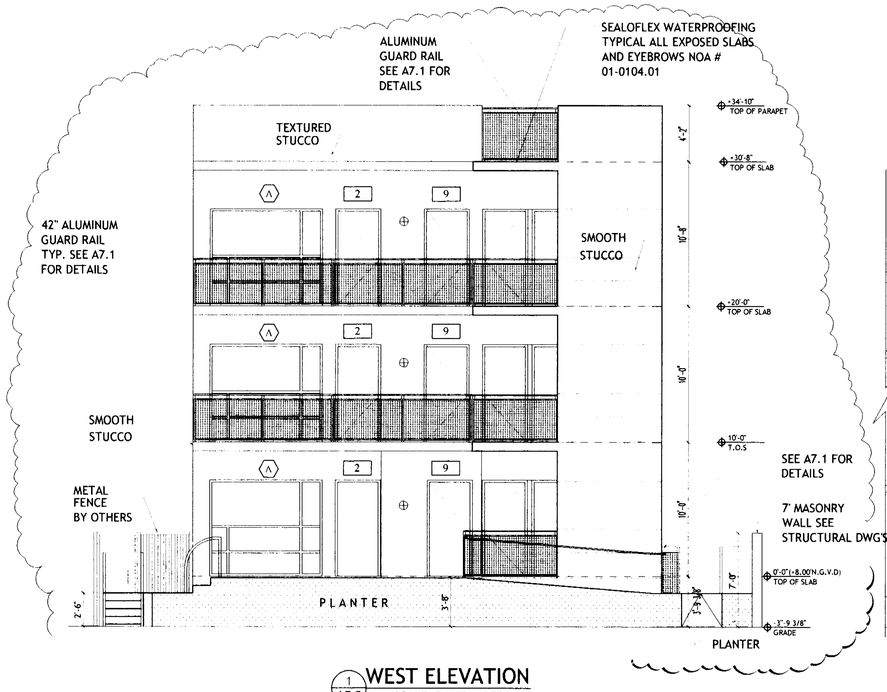

1 A3.0 **WEST ELEVATION**
SCALE: 3/16" = 1'-0"

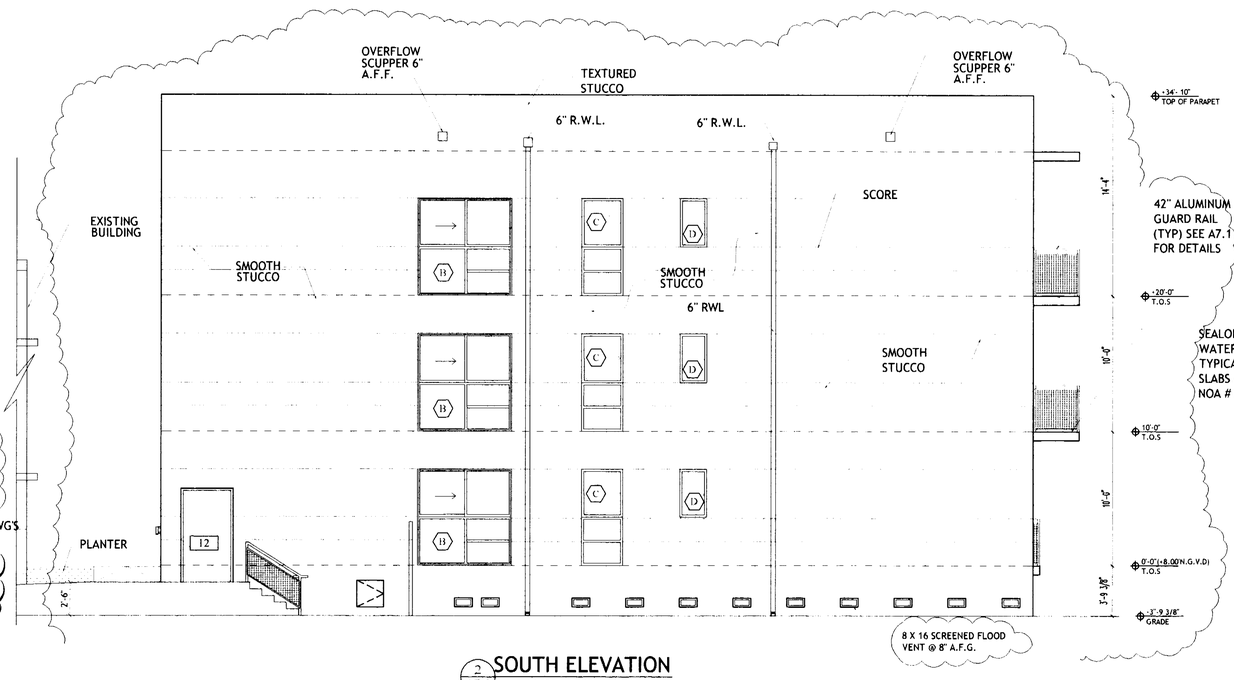

2 A3.0 **SOUTH ELEVATION**
SCALE: 3/16" = 1'-0"

3DESIGN INC
ANTHONY LEON
ARCHITECTURE
4500 BISCAYNE BLVD. SUITE #304 MIAMI, FL 33137 T 305 438 9577 F 305 438 9578

DRAWN BY:

REVISIONS:

1 10-13-06

SEAL

NEW BUILDING FOR
1529 JEFFERSON AVE
MIAMI BEACH, FL
33139

CITY OF MIAMI BEACH

A-3.0

JUNE 6, 2006

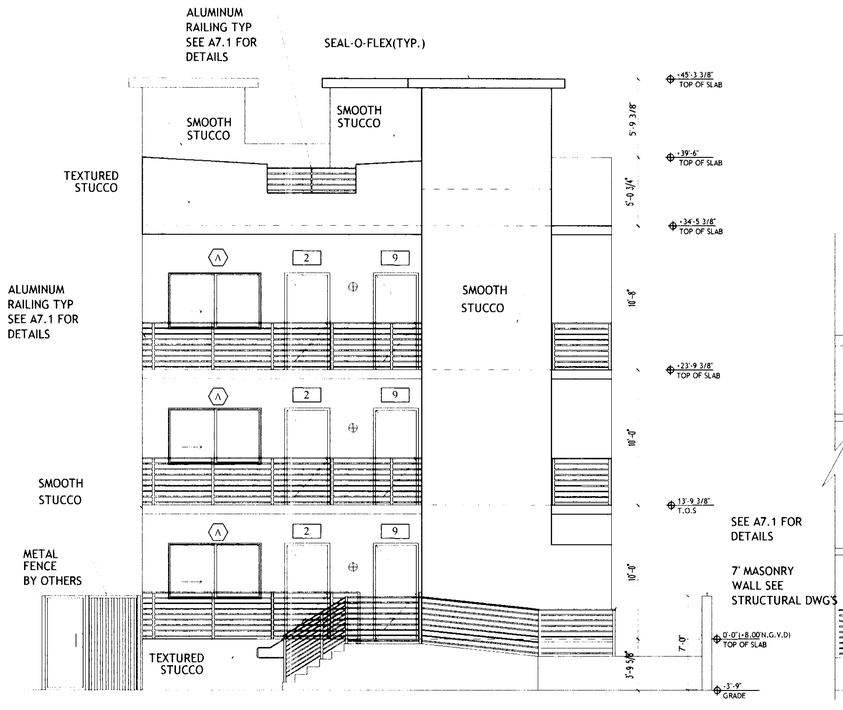

1 A3.0 WEST ELEVATION
SCALE: 3/16" = 1'-0"

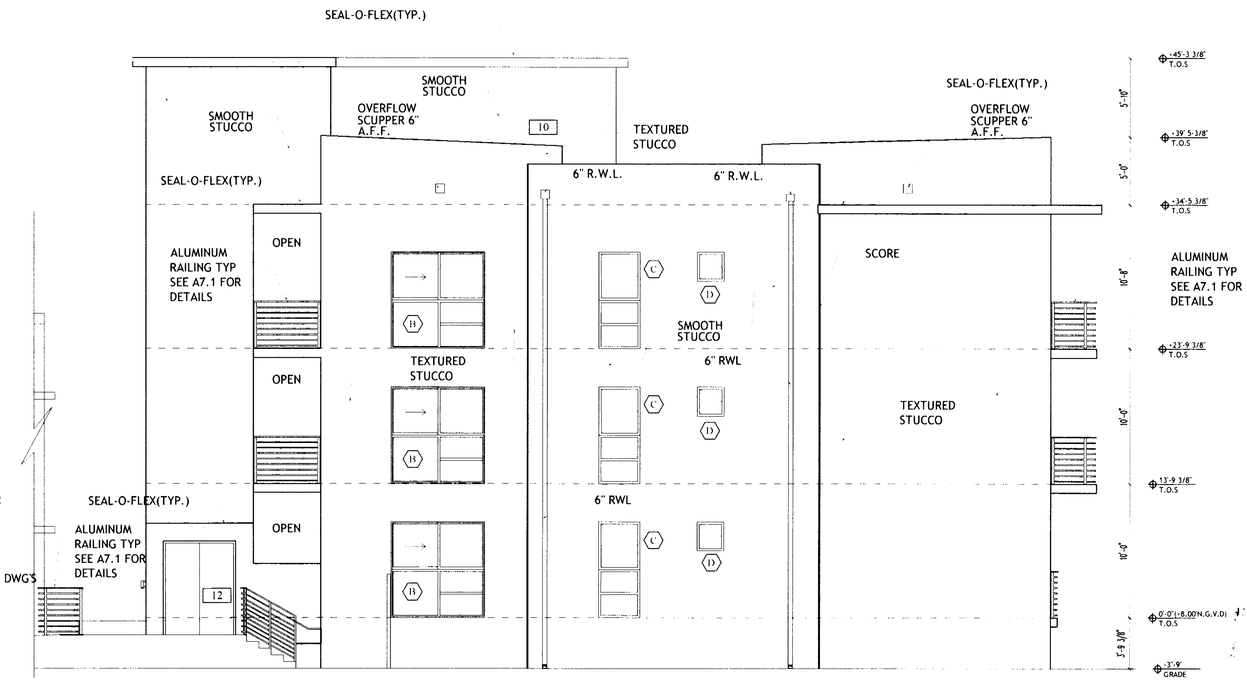

2 A3.0 SOUTH ELEVATION
SCALE: 3/16" = 1'-0"

DRAWN BY:

REVISIONS:

3D DESIGN INC
ANTHONY LEON
ARCHITECTURE
4500 BISCAYNE BLVD SUITE #604 MIAMI, FL 33137 T 305.438.9577 F 305.438.9578

SEAL

NEW BLGD FOR 1529 JEFFERSON AVE MIAMI BEACH, FL 33139

OFFICE COPY
CITY OF MIAMI BEACH
APPROVED FOR PERMIT BY THE FOLLOWING:
BUILDING:
ZONING:
DRB/HPB:
CONCURRENCY:
PLUMBING:
ELECTRICAL:
MECHANICAL:
FIRE PREVENTION:
ENGINEERING:
PUBLIC WORKS:
STRUCTURAL:
ACCESSIBILITY:
As per ... REVIEWED FOR CODE ...

CITY OF MIAMI BEACH

A-3.0
JUNE 6, 2006

DRAWN BY:

REVISIONS:

1 04-13-07
2 01.31.07
3 10-13-06

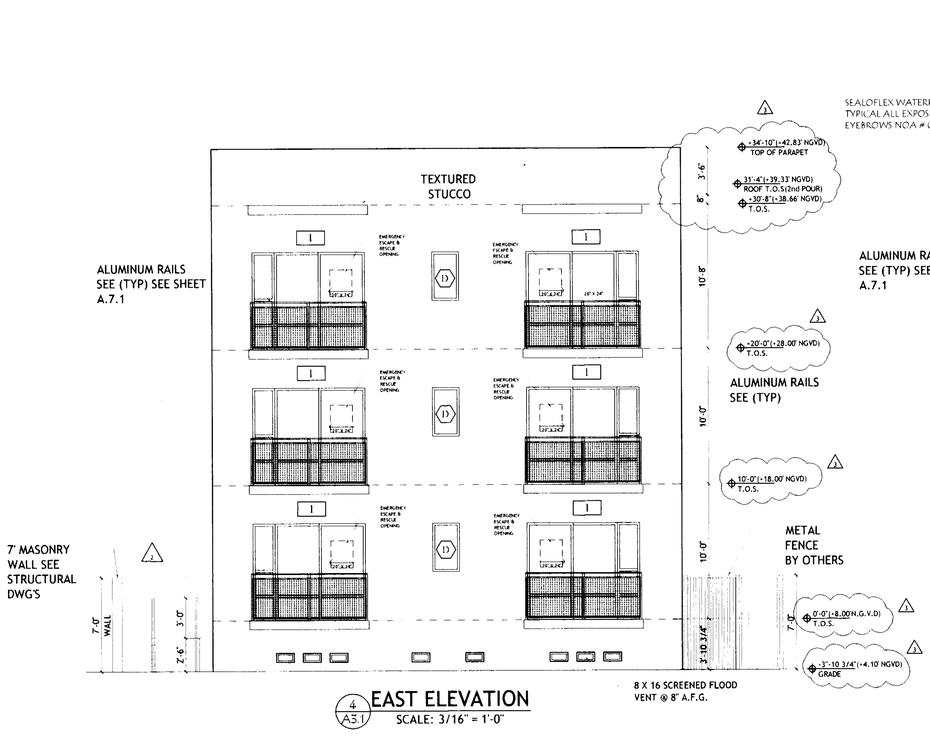

4 A3.1 EAST ELEVATION
SCALE: 3/16" = 1'-0"

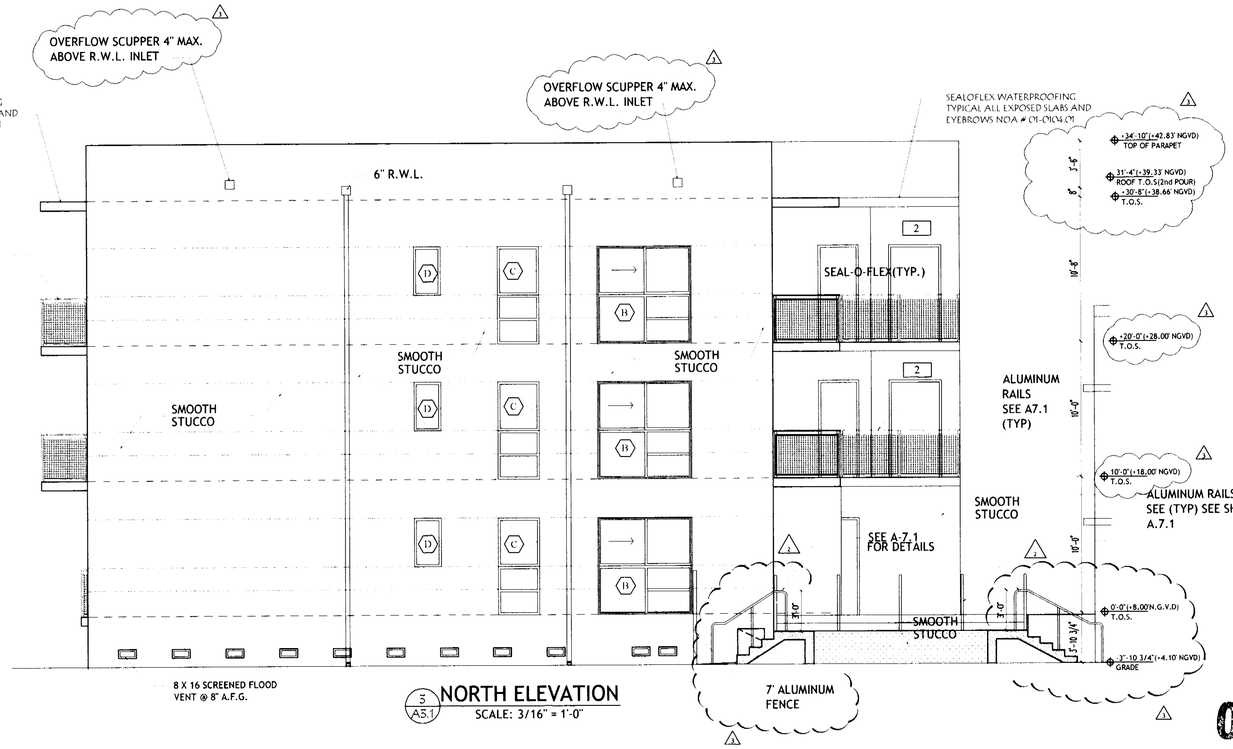

5 A3.1 NORTH ELEVATION
SCALE: 3/16" = 1'-0"

3DESIGN INC.
ANTHONY LEON
AR0016752
ARCHITECTURE
4300 BISCAYNE BLVD. SUITE#G04 MIAMI, FL 33157 T.305.458.9577 F.305.458.9579

SEAL

NEW BUILDING FOR
1529 JEFFERSON AVE
MIAMI BEACH, FL
33139

OFFICE COPY
CITY OF MIAMI BEACH
APPROVED BY
JUN
5/25/07
ENGINEERING
PUBLIC WORKS
STRUCTURAL:
ACCESSIBILITY:

A-3.1

JUNE 6, 2006

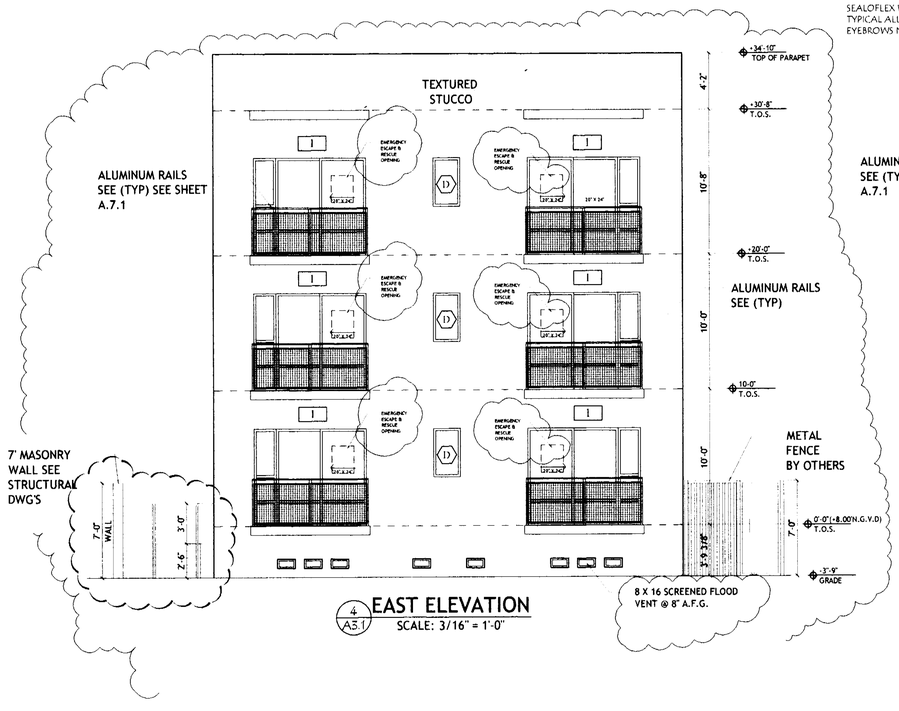

4 A3.1 EAST ELEVATION
SCALE: 3/16" = 1'-0"

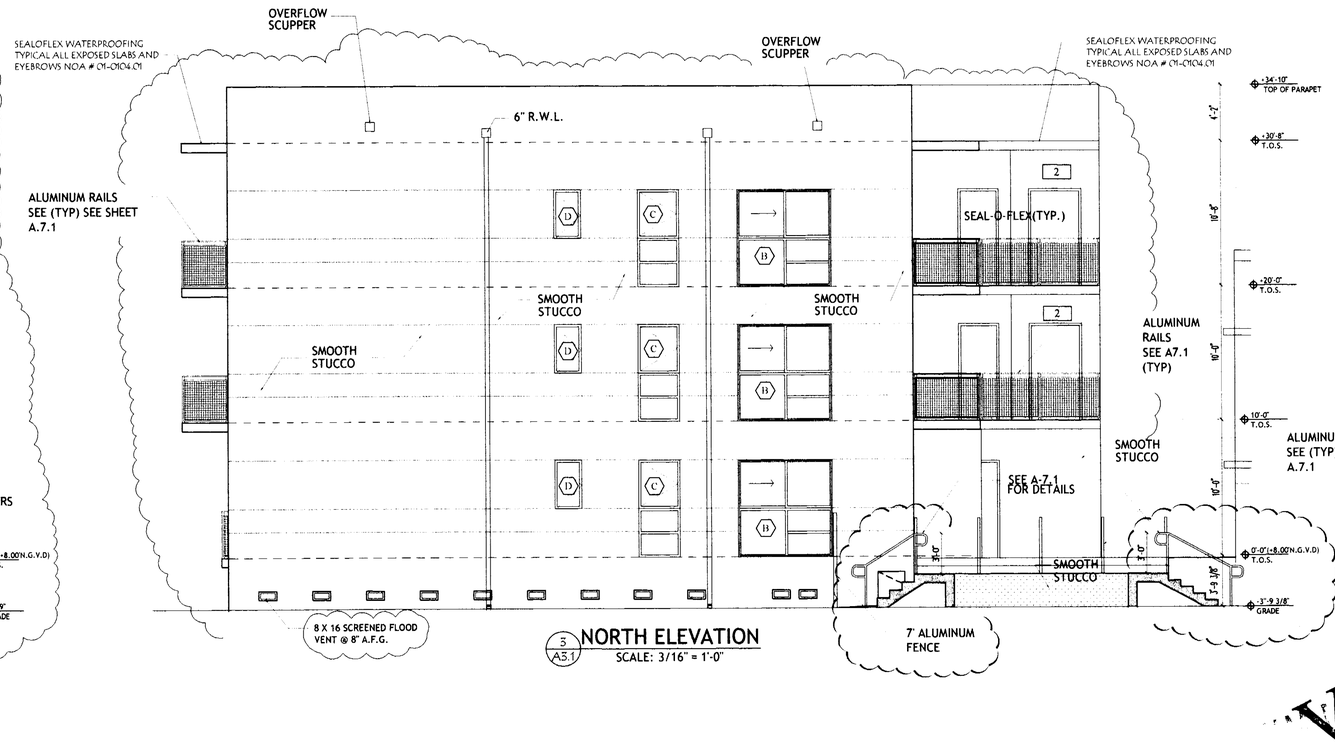

3 A3.1 NORTH ELEVATION
SCALE: 3/16" = 1'-0"

DRAWN BY:

REVISIONS:

2 01.31.07
1 10-13-06

3DESIGN, INC
ANTHONY LEON
AR0005752
ARCHITECTURE
4500 BISCAYNE BLVD. SUITE#604 MIAMI, FL 33137 T.305.458.9577 F.305.458.9578

SEAL
2/14/07

NEW BUILDING FOR
1529 JEFFERSON AVE
MIAMI BEACH, FL
33139

VOID

By: 3/6/07
DRAWN:
CONCURRENT:
PLUMBING:
ELECTRICAL:
MECHANICAL:

A-3.1
JUNE 6, 2006

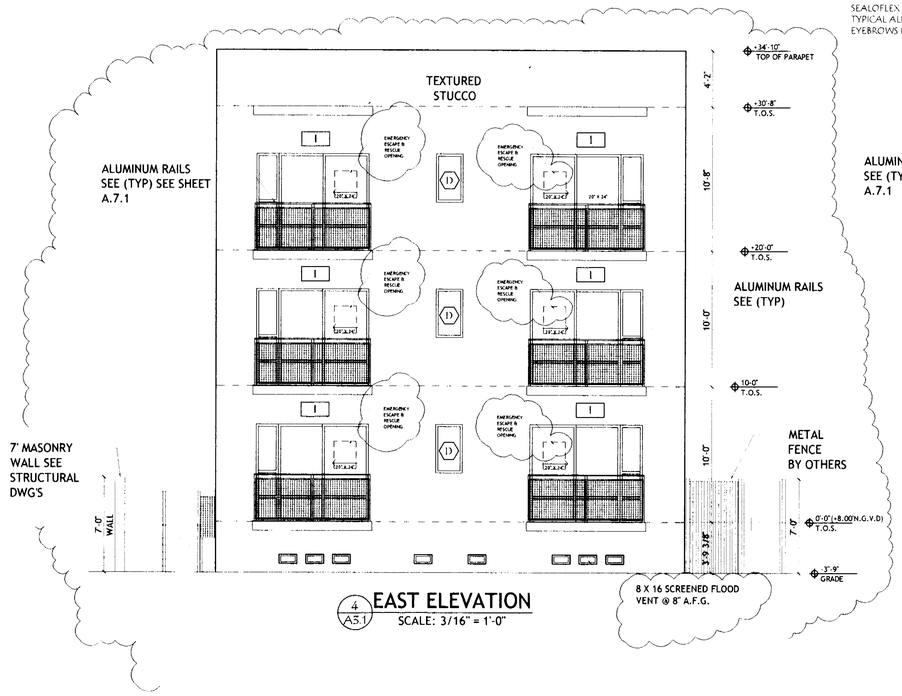

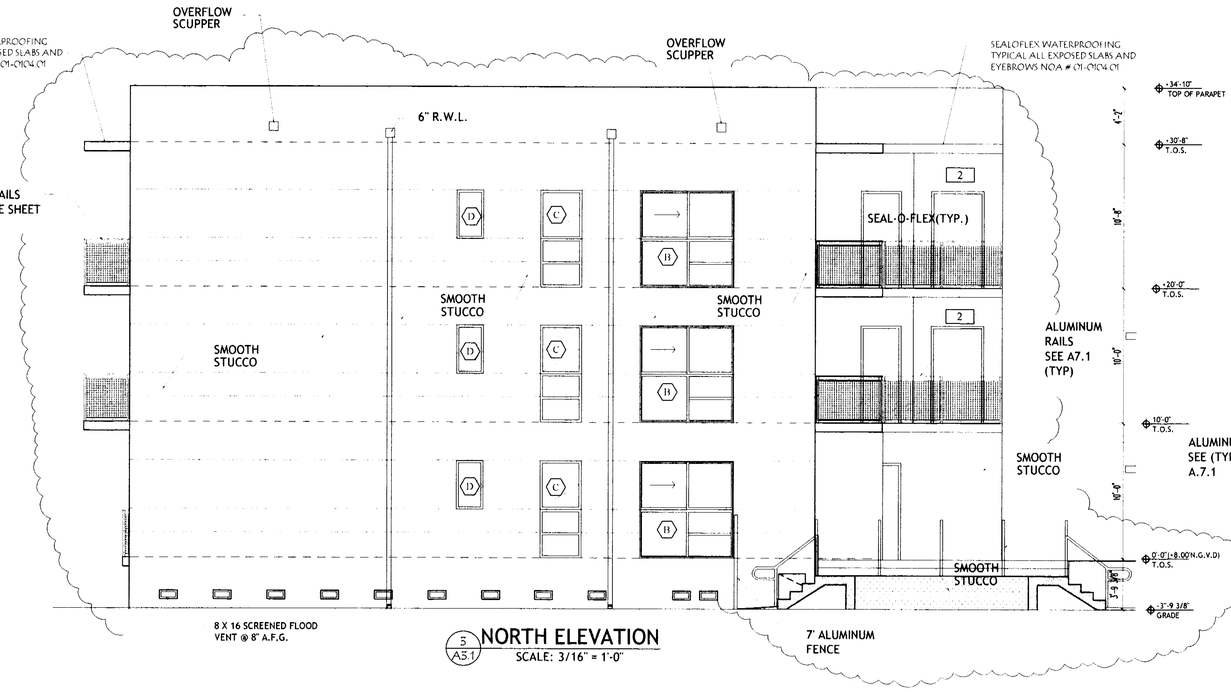

3DESIGN INC.
ANTHONY LEON
AR0006752
ARCHITECTURE
4500 BISCAYNE BLVD. SUITE#604 MIAMI, FL 33137 T.305.438.9577 F.305.438.9578

DRAWN BY:

REVISIONS:

1 10-13-06

10.10.06
SEAL

NEW BUILDING FOR
1529 JEFFERSON AVE
MIAMI BEACH, FL
33139

CITY OF MIAMI BEACH
VOID

A-3.1

JUNE 6, 2006

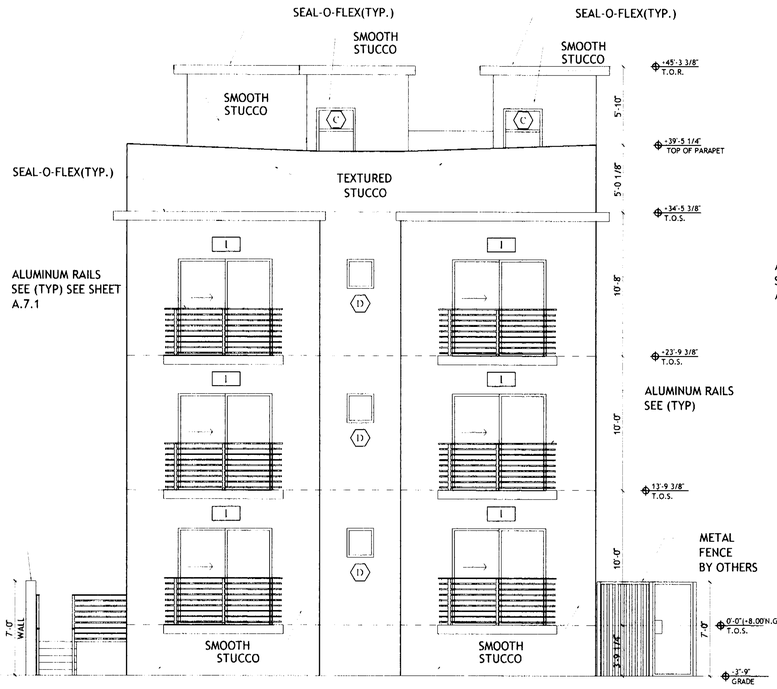

4 A5.1 **EAST ELEVATION**
SCALE: 3/16" = 1'-0"

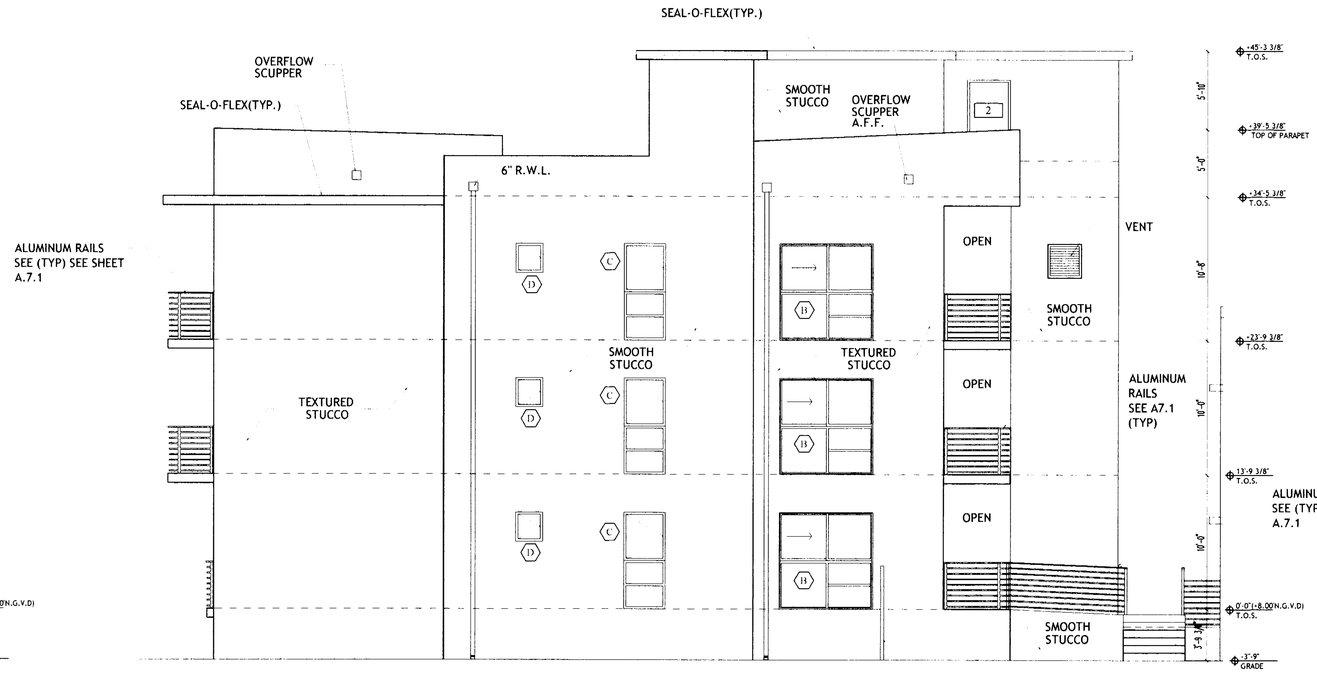

5 A3.1 **NORTH ELEVATION**
SCALE: 3/16" = 1'-0"

DRAWN BY:

REVISIONS:

3DESIGN INC
ANTHONY LEON
AR0017572
ARCHITECTURE
4500 BISCAYNE BLVD. SUITE#404 MIAMI, FL 33137 T.305.438.9377 F.305.438.9378

SEAL

NEW BLDG FOR
1529 JEFFERSON AVE
MIAMI BEACH, FL
33139

OFFICE COPY
CITY OF MIAMI BEACH
APPROVED FOR PERMIT BY
THE FOLLOWING:

BUILDING:
ZONING:
PLANNING:
CONCURRENCY:
PLUMBING:
ELECTRICAL:
MECHANICAL:
FIRE PREVENTION:
ENGINEERING:
PUBLIC WORKS:
STRUCTURAL:
ACCESSIBILITY:
[illegible]:

CITY OF MIAMI BEACH

A-3.1

JUNE 6, 2006

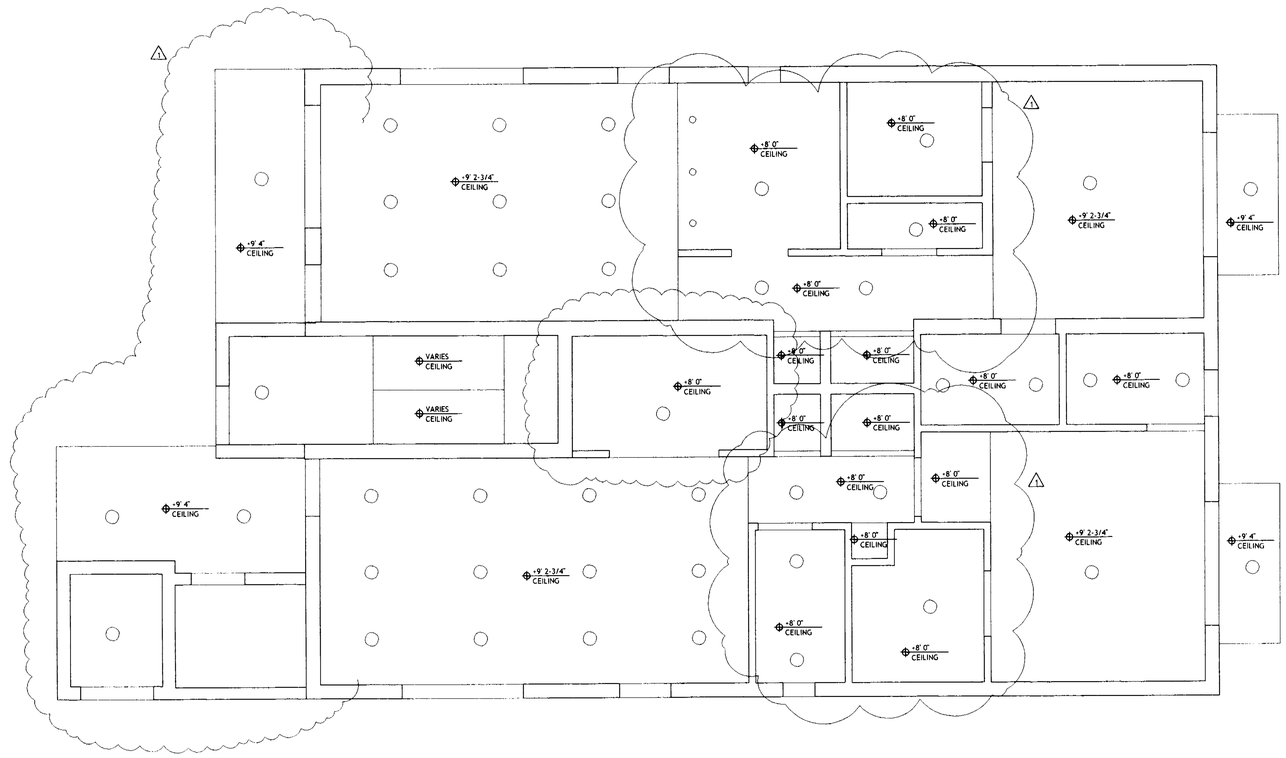

FIRST FLOOR REFLECTED CEILING
SCALE: 1/4" = 1'-0"

DRAWN BY:

REVISIONS:

1 10.13.06

3DESIGN INC
ANTHONY LEON
AR0015752
ARCHITECTURE
4500 BISCAYNE BLVD. SUITE#204 MIAMI, FL 33137 T 305.438.9577 F 305.438.9578

SEAL

NEW BUILDING
FOR
1529 JEFFERSON AVE.
MIAMI BEACH, FL
33139

OFFICE COPY
CITY OF MIAMI BEACH
APPROVED FOR ISSUE BY
THE BUILDING
BUILDING: 5/16/07
ZONING:
DRB/HPB:
CONCURRENCY:
PLUMBING:
ELECTRICAL: 5/25/7
MECHANICAL:
FIRE PREVENTION:
ENGINEERING:
PUBLIC WORKS:
STRUCTURAL:
ACCESS:
LEVATOR:
Code Section 104.5.3
COMPLIANCE

A-4.1

JUNE 6, 2006

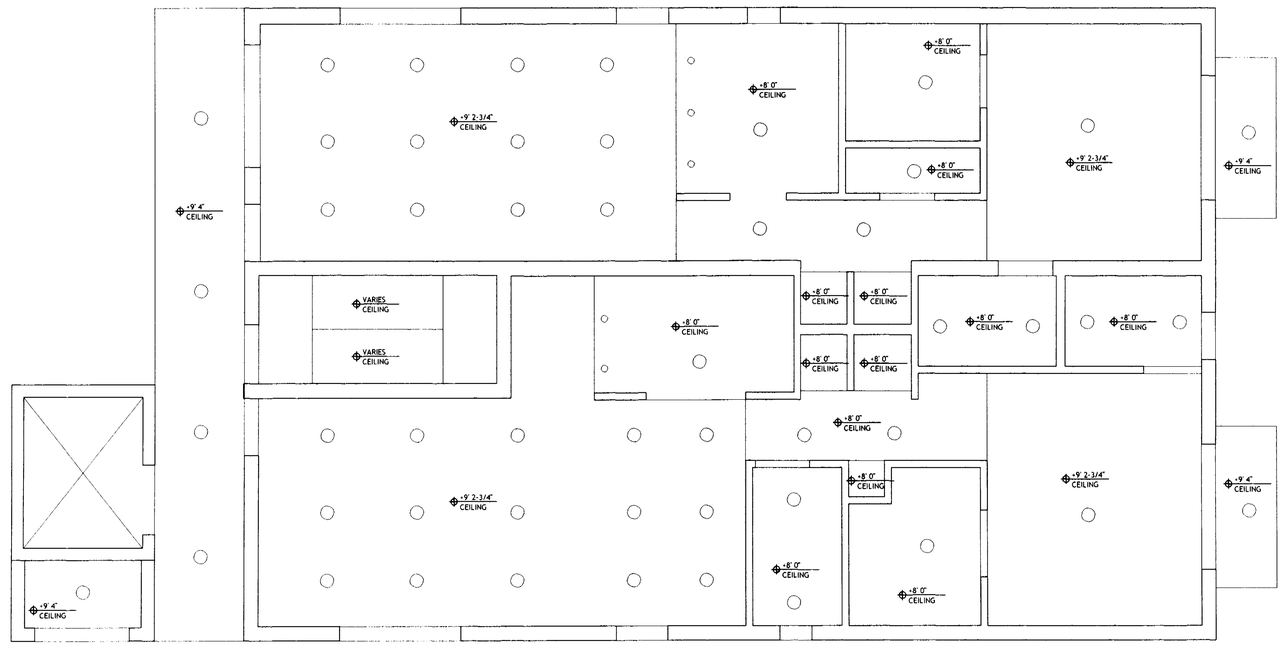

FIRST FLOOR REFLECTED CEILING
SCALE: 1/4" = 1'-0"

DRAWN BY:

REVISIONS:

3D DESIGN, INC
ANTHONY LEON
ARCHITECTURE
4500 BISCAYNE BLVD SUITE#604 MIAMI, FL 33137 T 305.458.9377 F 305.458.9378

SEAL

NEW BLGD
FOR
1529 JEFFERSON AVE
MIAMI BEACH, FL
33139

OFFICE COPY
CITY OF MIAMI BEACH
APPROVED FOR PERMIT BY
THE FOLLOWING:
BUILDING:
ZONING:
DRB/HPB:
CONCURRENCY:
PLUMBING:
ELECTRICAL:
MECHANICAL:
FIRE PREVENTION:
ENGINEERING:
PUBLIC WORKS:
STRUCTURAL:
ACCESSIBILITY:
ELEVATOR:
As per Florida Building Code [illegible] 104.5.3
REVIEWED FOR [illegible]

CITY OF [illegible]

A-4.1

JUNE 6, 2006

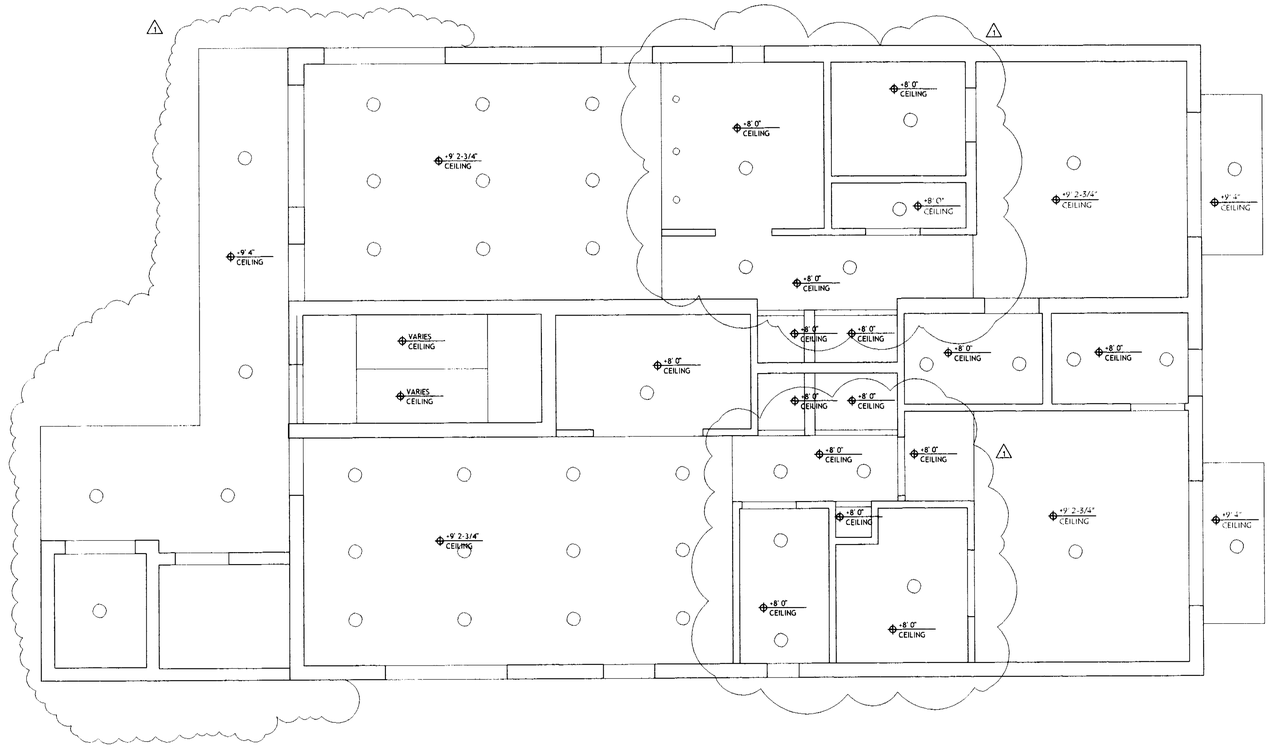
+9' 2-3/4" CEILING
+8' 0" CEILING
+8' 6" CEILING
+9' 4" CEILING
+8' 0" CEILING
+8' 0" CEILING
+8' 0

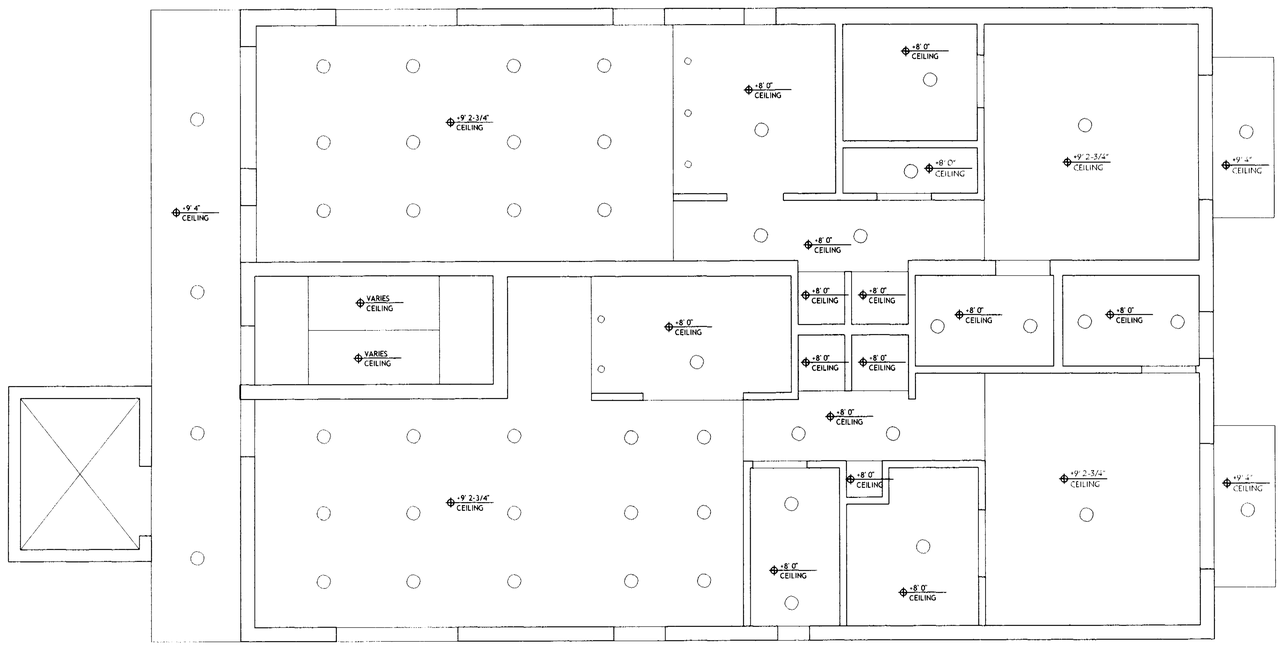

SECOND FLOOR REFLECTED CEILING

SCALE: 1/4" = 1'-0"

DRAWN BY:

REVISIONS:

3DESIGN INC.
ANTHONY LEON
ARCHITECTURE
4500 BISCAYNE BLVD. SUITE #204 MIAMI, FL 33137 T 305.438.3377 F 305.438.9578

SEAL

NEW BLDG
FOR
1529 JEFFERSON AVE
MIAMI BEACH, FL
33139

OFFICE COPY
CITY OF MIAMI BEACH
APPROVED FOR PERMIT BY
THE FOLLOWING:

BUILDING:
ZONING:
DRB/HPB:
CONCURRENCY:
PLUMBING:
ELECTRICAL:
MECHANICAL:
FIRE PREVENTION:
ENGINEERING:
PUBLIC WORKS:
STRUCTURAL:
ACCESSIBILITY:
ELEVATOR:

CITY C

A-4.2

JUNE 6, 2006

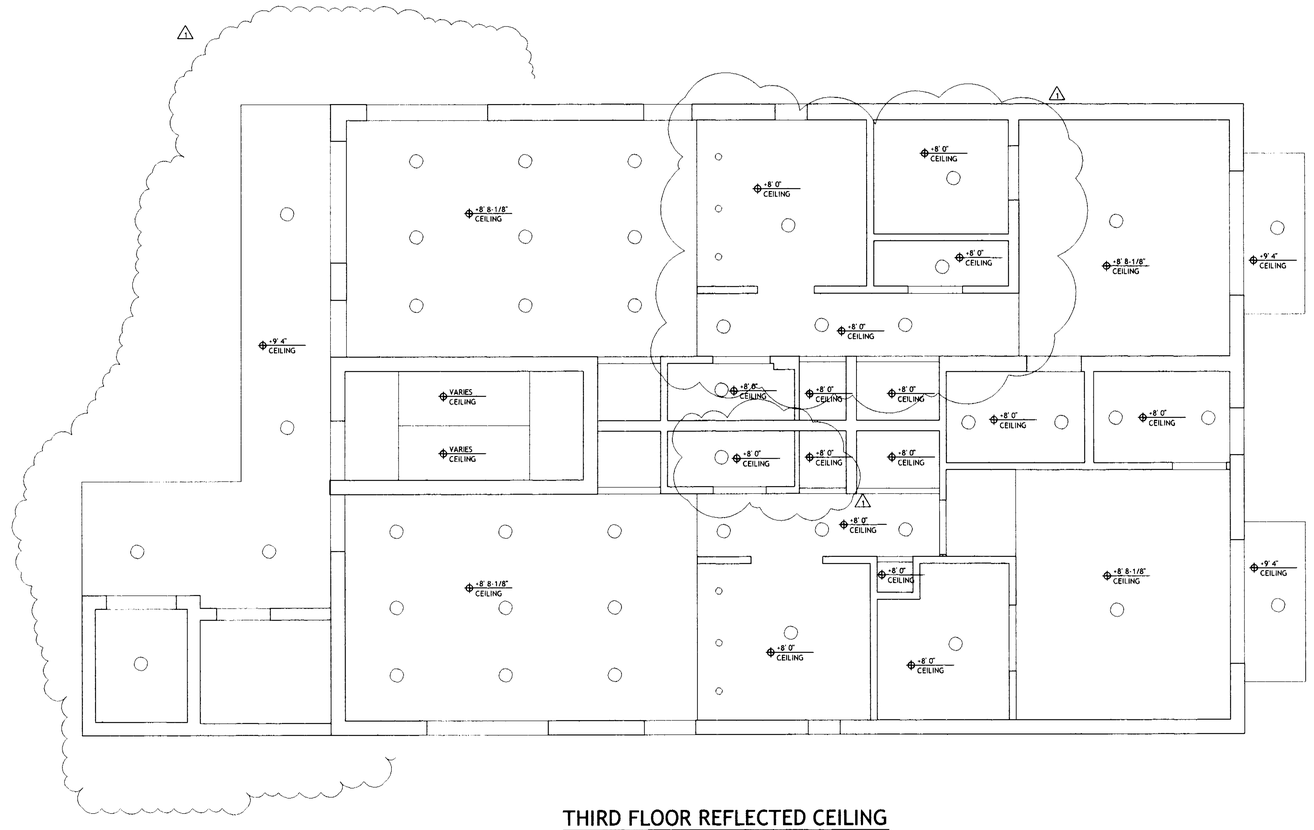

THIRD FLOOR REFLECTED CEILING

SCALE: 1/4" = 1'-0"

DRAWN BY:

REVISIONS:

1 10.13.06

3DESIGN INC
ANTHONY LEON
ARCHITECTURE
AR0006572
4500 BISCAYNE BLVD SUITE#404 MIAMI, FL 33137 T 305 438 9577 F 305 438 9578

SEAL

NEW BUILDING
FOR
1529 JEFFERSON AVE
MIAMI BEACH, FL
33139

OFFICE COPY
CITY OF MIAMI BEACH
APPROVED FOR PERMIT BY
THE FOLLOWING:

BUILDING:
ZONING:
DRB/HPB:
CONCURRENCY:
PLUMBING:
ELECTRICAL:
MECHANICAL:
FIRE PREVENTION:
ENGINEERING:
PUBLIC WORKS:
STRUCTURAL:
CC:
LANDSCAPE:

A-4.3

JUNE 6, 2006

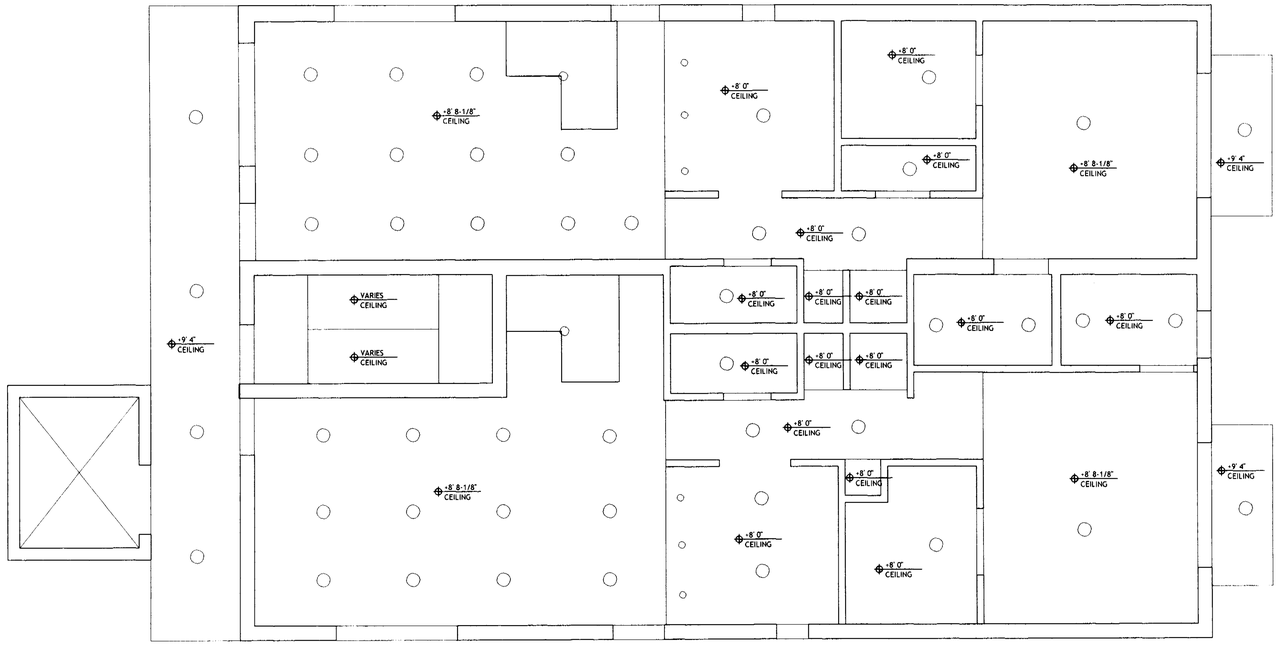

THIRD FLOOR REFLECTED CEILING
SCALE: 1/4" = 1'-0"

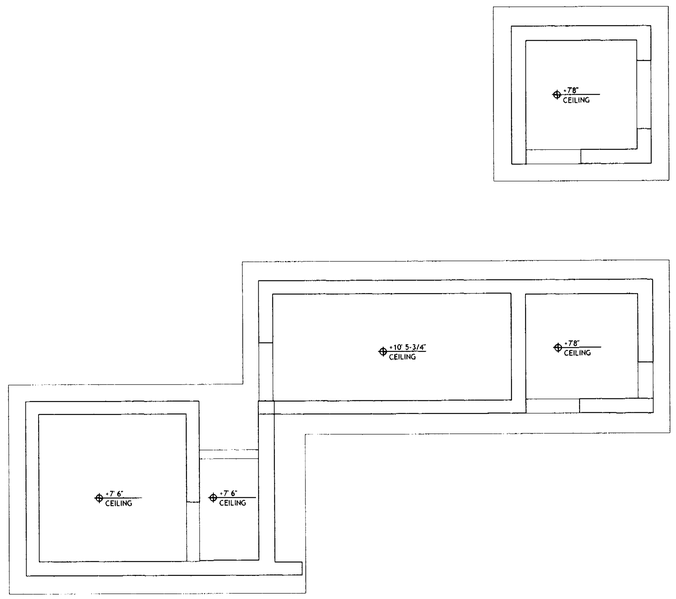

ROOF TERRACE REFLECTED CEILING
SCALE: 1/4" = 1'-0"

DRAWN BY:

REVISIONS:

3DESIGN
ANTHONY LEON
ARCHITECTURE
4500 BISCAYNE BLVD SUITE#604 MIAMI, FL 33137 T 305 438 9577 F 305 438 9578

SEAL

NEW BLGD
FOR
1529 JEFFERSON AVE
MIAMI BEACH, FL
33139

OFFICE COPY
CITY OF MIAMI BEACH
APPROVED FOR PERMIT
THE FOLLOWING:
BUILDING:
ZONING:
PLANNING:
CONCURRENCY:
PLUMBING:
ELECTRICAL:
MECHANICAL:
FIRE PREVENTION:
ENGINEERING:
PUBLIC WORKS:
STRUCTURAL:
ACCESSIBILITY:
ELEVATOR:

CITY OF MIAMI BEACH

A-4.3

JUNE 6, 2006

DRAWN BY:

REVISIONS:

2 04-24-07
1 10.13.06

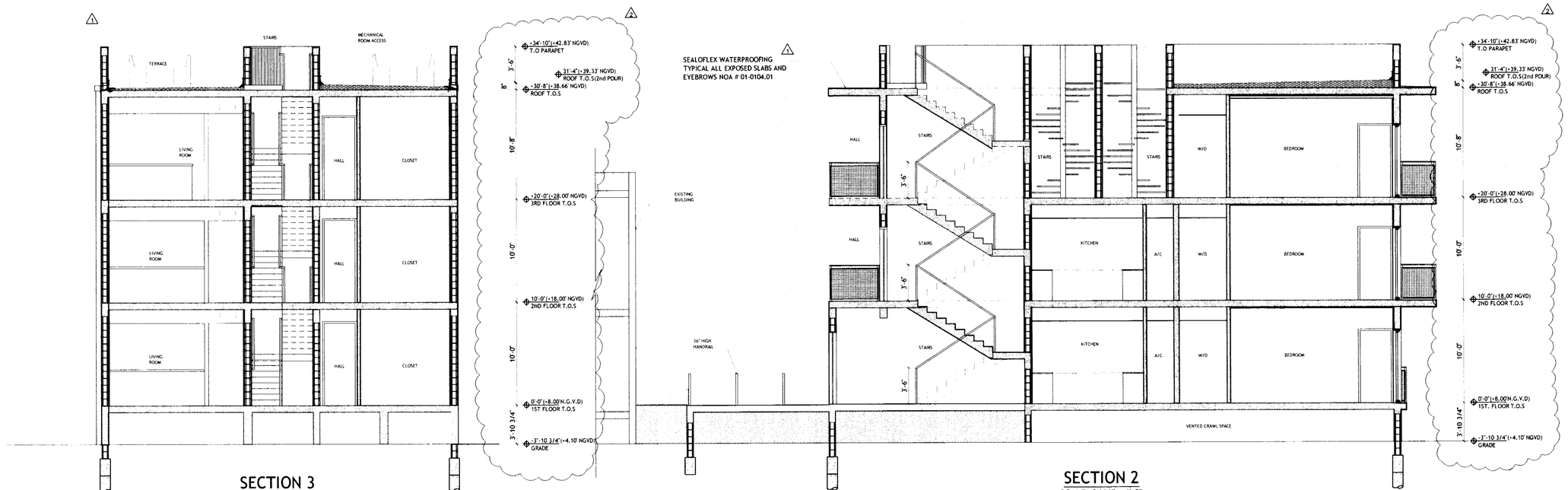

SECTION 3
SCALE: 3/16" = 1'-0"

SECTION 2
SCALE: 3/16" = 1'-0"

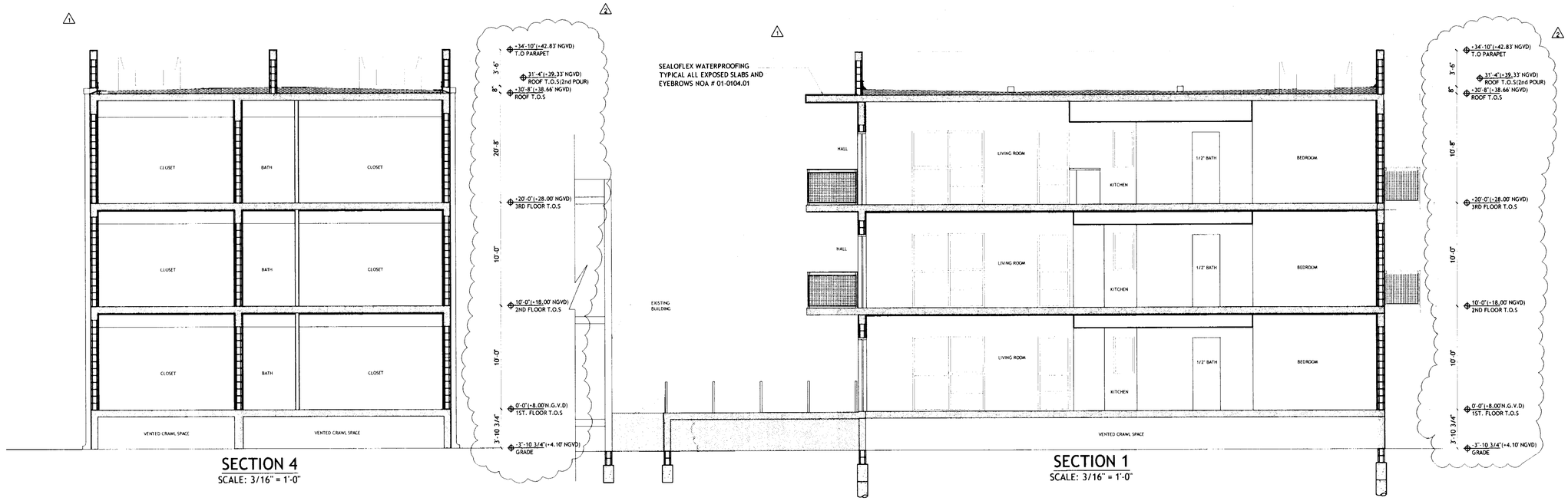

SECTION 4
SCALE: 3/16" = 1'-0"

SECTION 1
SCALE: 3/16" = 1'-0"

3DESIGN INC.
ANTHONY LEON
A0006752
ARCHITECTURE
4300 BISCAYNE BLVD. SUITE #604 MIAMI, FL 33137 T.305.438.9577 F.305.438.9579

SEAL

NEW BUILDING
FOR
1529 JEFFERSON AVE
MIAMI BEACH, FL
33139

OFFICE COPY
CITY OF MIAMI BEACH
APPROVED FOR PERMIT BY
FOR THE FOLLOWING:
BUILDING:
ZONING:
PLANNING:
ELECTRICAL:
MECHANICAL:
FIRE PREVENTION:
ENGINEERING:
PUBLIC WORKS:
STRUCTURAL:
ACCESSIBILITY:

A-5.0

JUNE 6, 2006

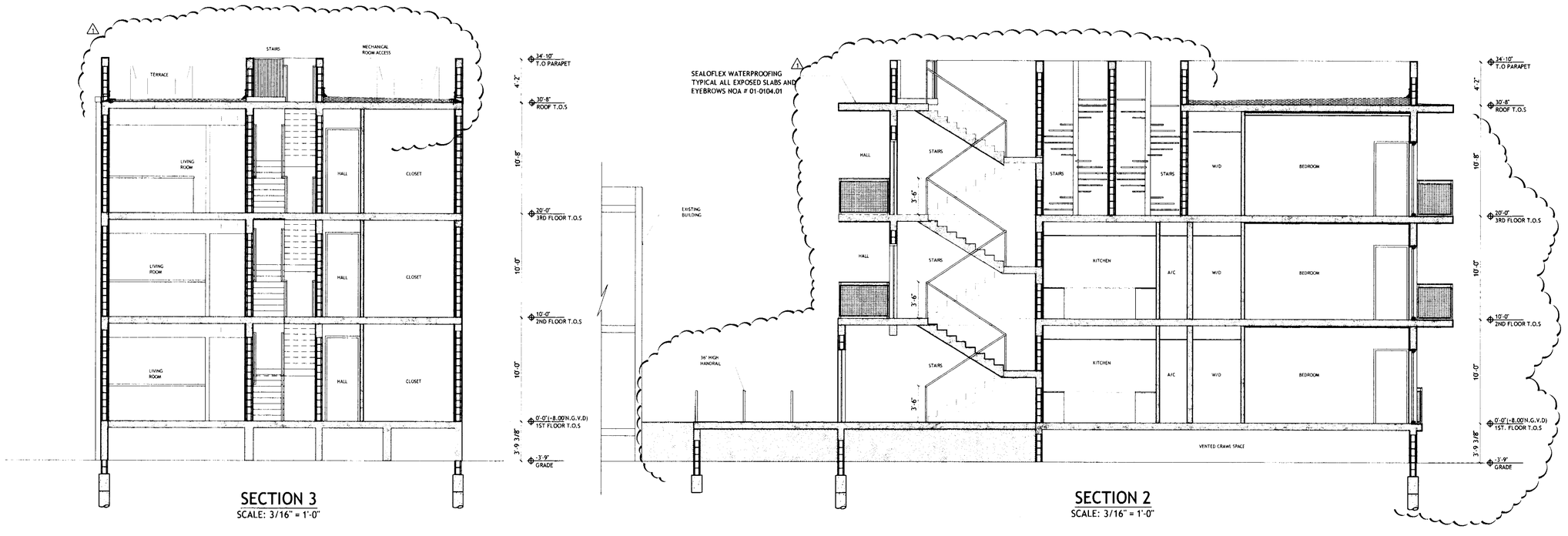

SECTION 3
SCALE: 3/16" = 1'-0"

SECTION 2
SCALE: 3/16" = 1'-0"

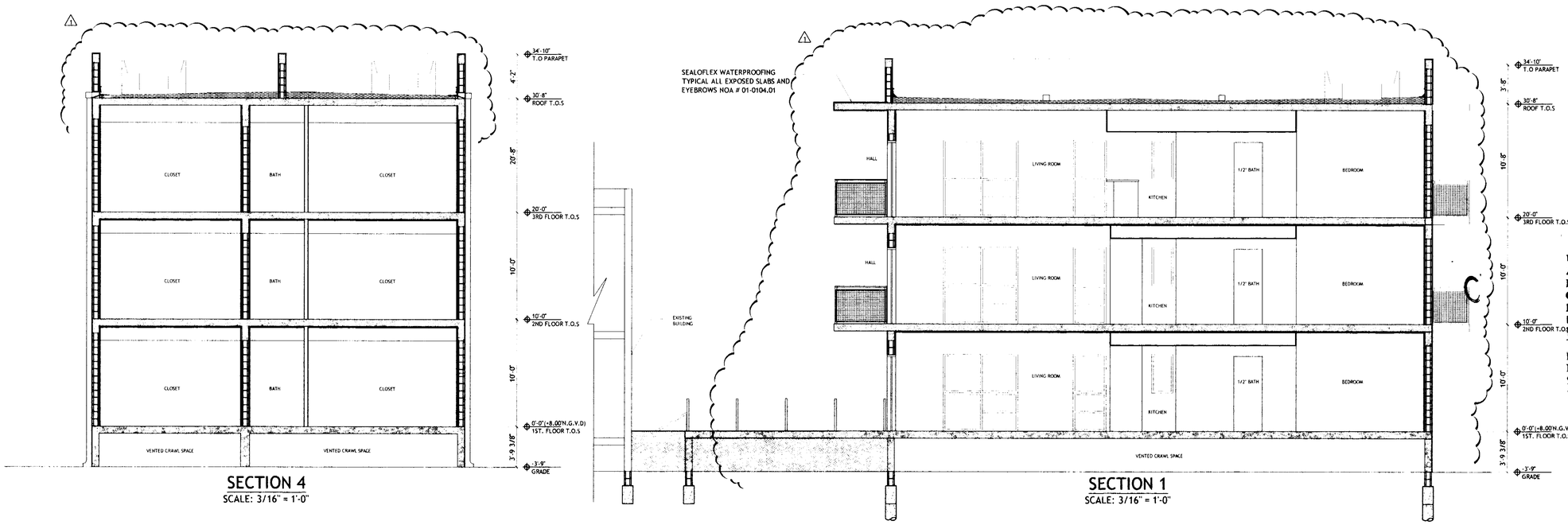

SECTION 4
SCALE: 3/16" = 1'-0"

SECTION 1
SCALE: 3/16" = 1'-0"

DRAWN BY:

REVISIONS:

1 10.13.06

3DESIGN
ANTHONY LEON
AR0006752
ARCHITECTURE
4500 BISCAYNE BLVD SUITE#404 MIAMI, FL 33137 T 305 438 9577 F 305 438 9578

10.10.06
SEAL

NEW BUILDING
FOR
1529 JEFFERSON AVE
MIAMI BEACH, FL
33139

VOID
CERTIFIED COPY
CITY OF MIAMI BEACH
APPROVED FOR PERMIT BY
THE FOLLOWING:
BUILDING: mw 3/6/07
ZONING:
DRB/HPB:
CONCURRENCY:
PLUMBING:
ELECTRICAL:
MECHANICAL:
FIRE PREVENTION:
ENGINEERING:
PUBLIC WORKS:
STRUCTURAL:
ACCESSIBILITY:
LEVATOR:
As per

A-5.0

JUNE 6, 2006

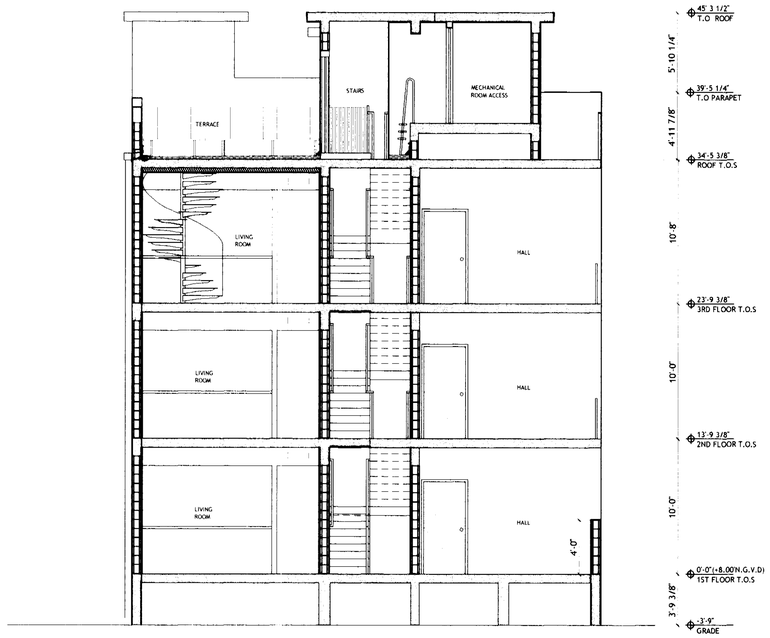

SECTION 3
SCALE: 3/16" = 1'-0"

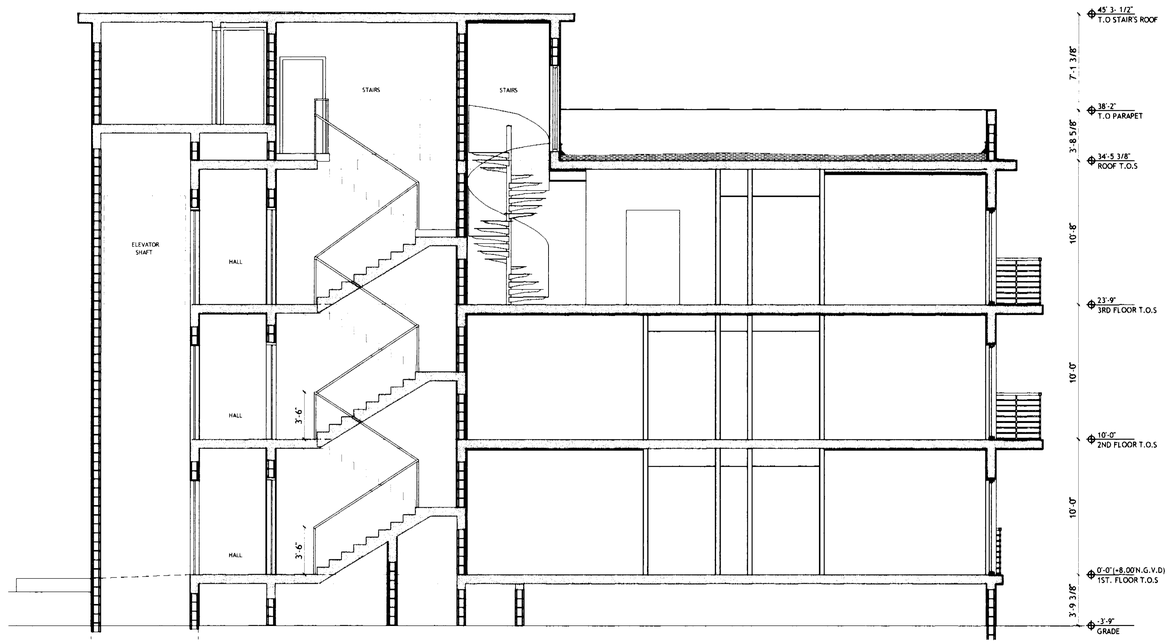

SECTION 2
SCALE: 3/16" = 1'-0"

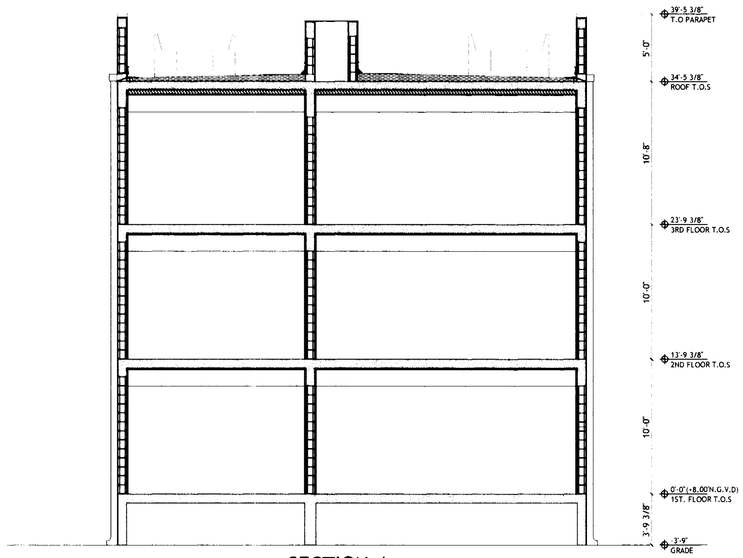

SECTION 4
SCALE: 3/16" = 1'-0"

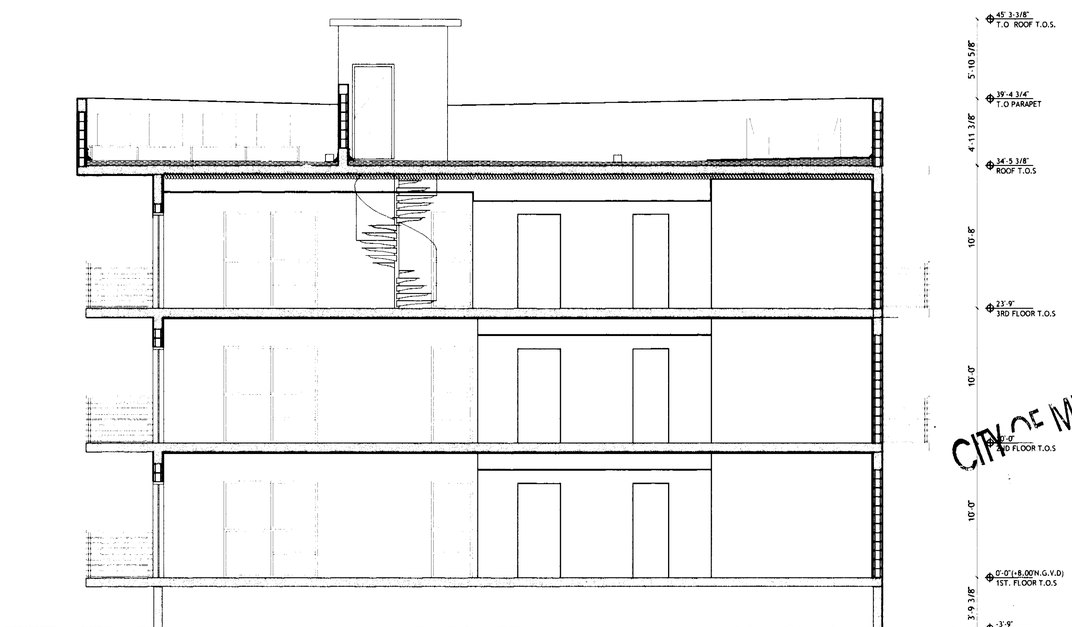

SECTION 1
SCALE: 3/16" = 1'-0"

DRAWN BY:

REVISIONS:

3DESIGN INC.
ANTHONY LEON
ARCHITECTURE
4300 BISCAYNE BLVD. SUITE#G04 MIAMI, FL 33137 T.305.438.9577 F.305.438.9578

SEAL

NEW BLGD
FOR
1529 JEFFERSON AVE
MIAMI BEACH, FL
33139

OFFICE CO...
CITY OF MIA...
APPROVED FOR ...
THE FOLLOWING
BUILDING:
ZONING:
DRAWN:
CONCURRENCY:
PLUMBING:
ELECTRICAL:
MECHANICAL:
FIRE PREVENTION:
ENGINEERING:
PUBLIC WORKS:
STRUCTURAL:

CITY OF MIAMI BEACH

...Building Code Section ...

A-5.0

JUNE 6, 2006

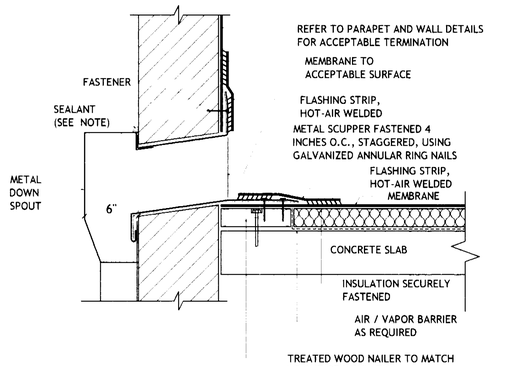

THRU-WALL RAINWATER LEADER

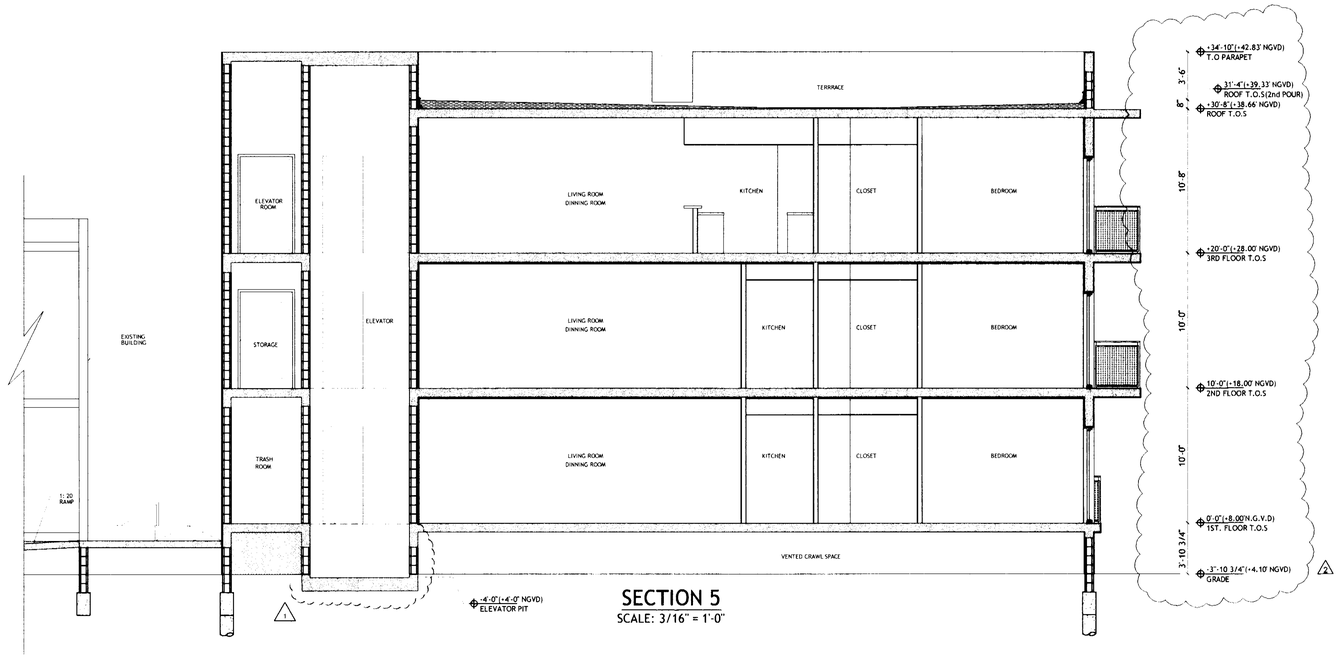

SECTION 5
SCALE: 3/16" = 1'-0"

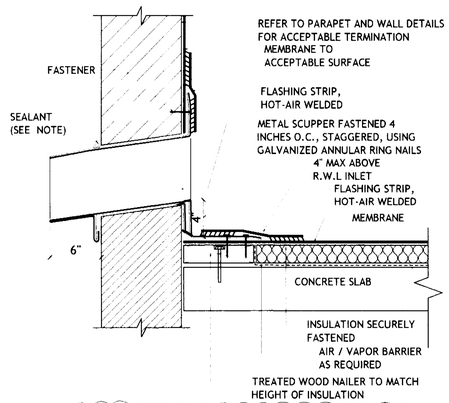

THRU-WALL OVER FLOW SCUPPER

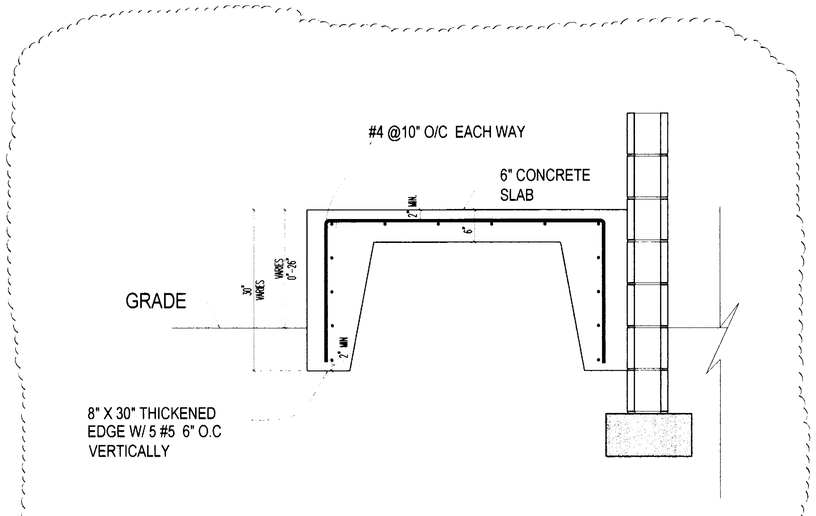

RAMP & SLOPED WALKWAYS
SCALE N.T.S

DRAWN BY:
REVISIONS:
04-24-07
01-31-07

3DESIGN, INC.
ANTHONY LEON
AR0006752
ARCHITECTURE
4300 BISCAYNE BLVD. SUITE#G04 MIAMI, FL 33137 T.305.438.9377 F.305.438.9379

5.24.07
SEAL

NEW BUILDING FOR
1529 JEFFERSON AVE
MIAMI BEACH, FL
33139

OFFICE COPY
CITY OF MIAMI BEACH
APPROVED FOR PERMIT BY THE FOLLOWING:
BUILDING:
ZONE:
PLANNING:
FIRE PREVENTION:
ENGINEERING:
PUBLIC WORKS:
STRUCTURAL:
ACCESSIBILITY:
JUN 2007
5/25/07

A-5.1
JUNE 6, 2006

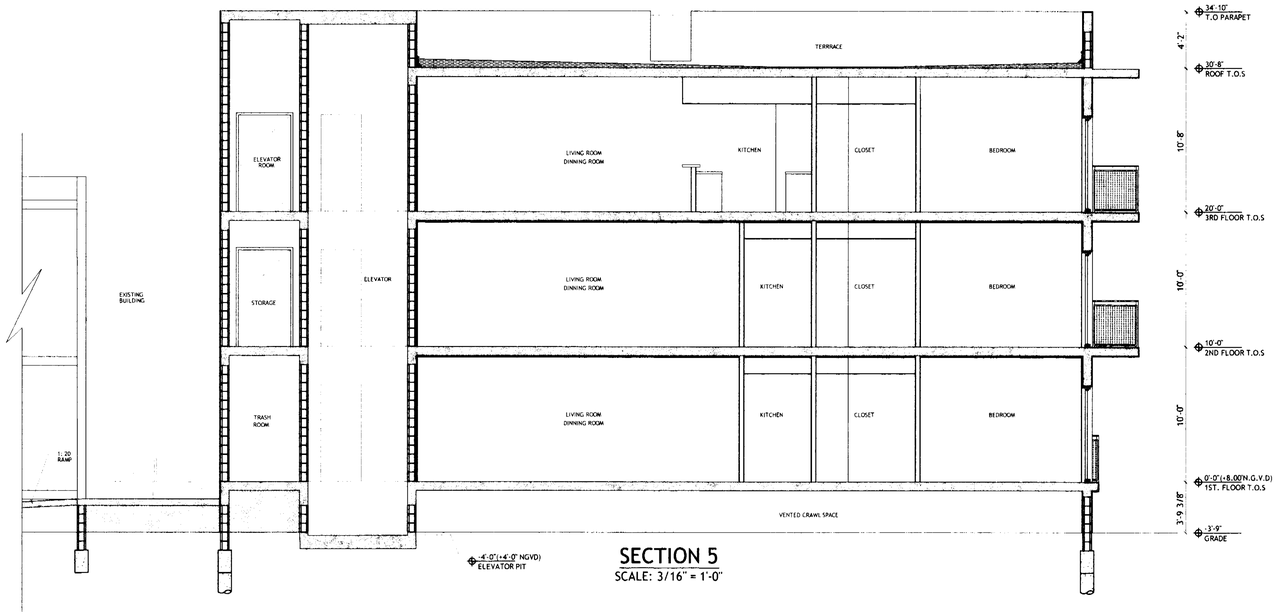

SECTION 5
SCALE: 3/16" = 1'-0"

DRAWN BY:

REVISIONS:

3DESIGN INC
ANTHONY LEON
ARCHITECTURE
4500 BISCAYNE BLVD SUITE#604 MIAMI, FL 33137 T 305.438.9377 F 305.438.9578

10.16.06
SEAL

NEW BUILDING
FOR
1529 JEFFERSON AVE
MIAMI BEACH, FL
33139

VOID

CITY OF MIAMI BEACH
APPROVED FOR PERMIT BY
THE FOLLOWING:
BUILDING: 3/6/07
ZONING:
DRB/HPB:
CONCURRENCY:
PLUMBING:
ELECTRICAL:
MECHANICAL:
FIRE PREVENTION:
ENGINEERING:
PUBLIC WORKS:
STRUCTURAL:
ACCESSIBILITY:
ELEVATOR:
As per Building Code Section 104.5.3
REVISIONS:

A-5.1
JUNE 6, 2006

1

WINDOW SCHEDULE:

#	SIZE	HEAD	GLASS	TYPE	FINISH	NOTES
A	8'-4 3/4" X 7'-2"	7'-2"	IMPACT	FIXED	ALUM	
B	6'-11 7/8" x 7'-2"	7'-2"	IMPACT	FIXED/SL	ALUM	
C	3'-1" x 7'-2"	7'-2"	IMPACT	FIXED/CA	ALUM	
D	2'-0" x 5'-6 7/8"	2'-0"	IMPACT	CASE	ALUM	

ALL WINDOWS TO BE UNDER SEPARATE PERMIT

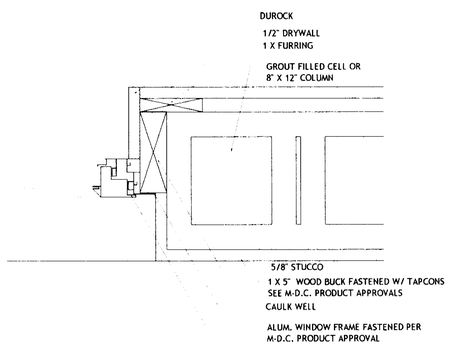

1/A6.0 TYP. WINDOW JAMB & HEAD DETAIL
SCALE: 3" = 1'-0"

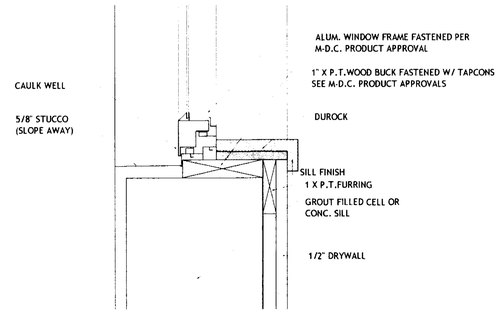

2/A6.0 TYP WINDOW SILL DETAIL
3" = 1'-0"

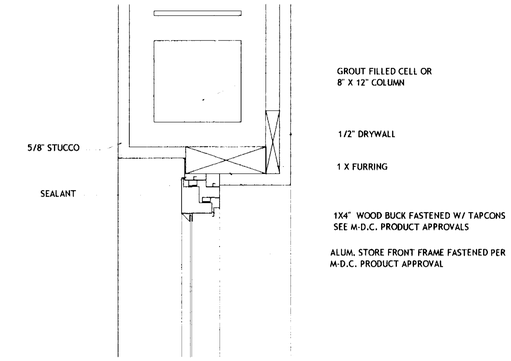

3/A6.0 TPY WINDOW JAMB DETAIL
SCALE: 3" = 1'-0"

1

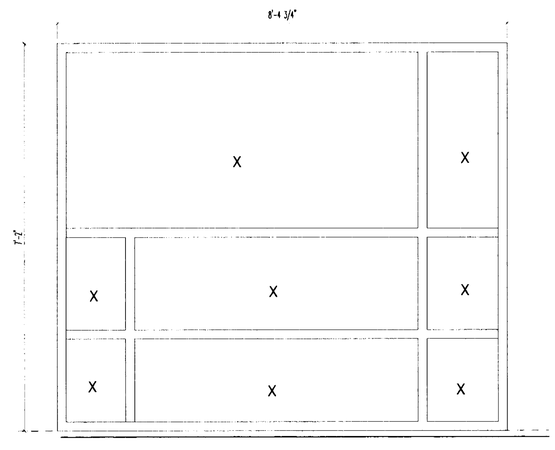

WINDOW A
SCALE: 3/4" = 1'-0"

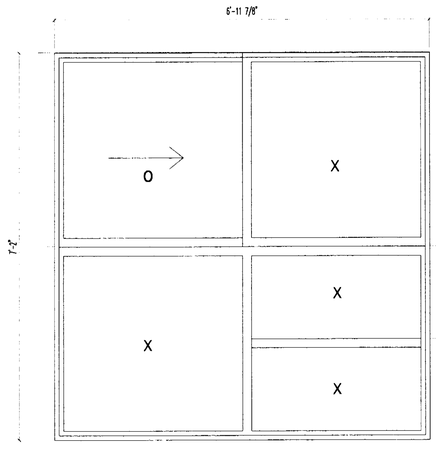

WINDOW B
SCALE: 3/4" = 1'-0"

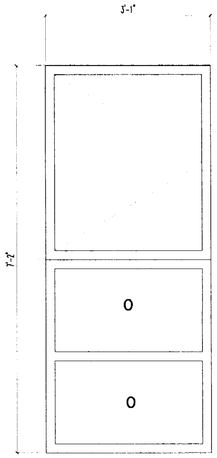

WINDOW C
SCALE: 3/4" = 1'-0"

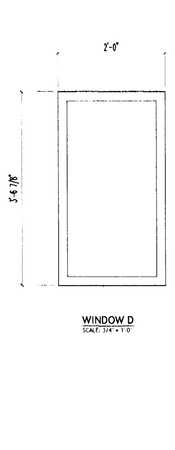

WINDOW D
SCALE: 3/4" = 1'-0"

DRAWN BY:

REVISIONS:

1 10-13-06

3DESIGN INC
ARCHITECTURE
ANTHONY LEON
ARCHITECT
4500 BISCAYNE BLVD. SUITE #204 MIAMI, FL 33137 T.305.458.9377 F.305.458.9578

SEAL

NEW BUILDING
FOR
1529 JEFFERSON AVE
MIAMI BEACH, FL
33139

tag 5/16/07
JUN 12 2007

Linda 5/25/07

A-6.0

JUNE 6, 2006

WINDOW SCHEDULE:

#	SIZE	HEAD	GLASS	TYPE	FINISH	NOTES
A	6'-11" X 4'-2"		IMPACT	FIXED	ALUM	
B	7'-0" x 7'-0"	7'-0"	IMPACT	FIXED	ALUM	
C	3'-1" x 7'-0"	3'-1"	IMPACT	FIXED	ALUM	
D	2'-0" x 2'-2"	2'-0"	IMPACT	SH	ALUM	TOP OPERATED

ALL WINDOWS TO BE UNDER SEPARATE PERMIT

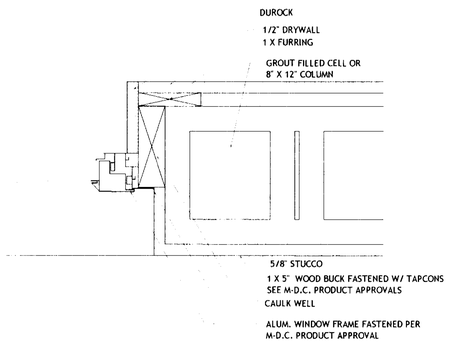

1 A6.0 TYP. WINDOW JAMB & HEAD DETAIL
SCALE: 3" = 1'-0"

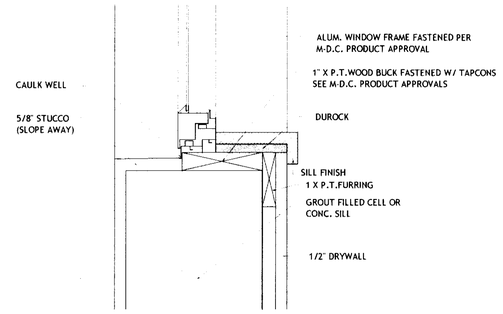

2 A6.0 TYP WINDOW SILL DETAIL
3" = 1'-0"

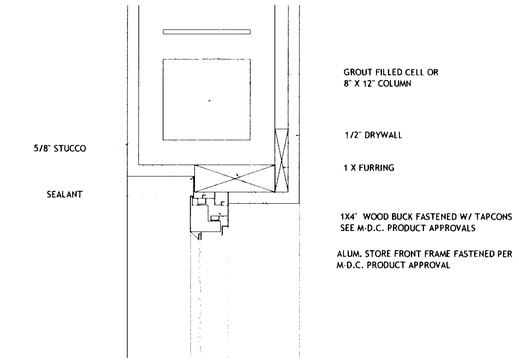

3 A6.0 TPY WINDOW JAMB DETAIL
SCALE: 3" = 1'-0"

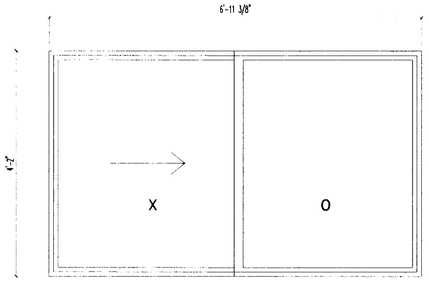

WINDOW A
SCALE: 3/4" = 1'-0"

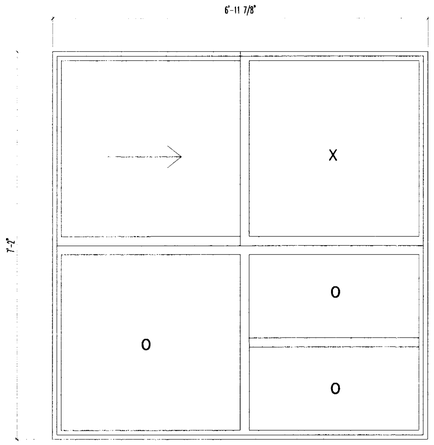

WINDOW B
SCALE: 3/4" = 1'-0"

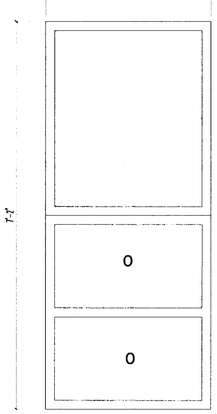

WINDOW C
SCALE: 3/4" = 1'-0"

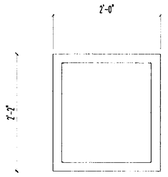

WINDOW D
SCALE: 3/4" = 1'-0"

DRAWN BY:

REVISIONS:

3DESIGN INC.
ANTHONY LEON
AR0006752
ARCHITECTURE
4300 BISCAYNE BLVD. SUITE#604 MIAMI, FL 33137 T 305.438.9377 F 305.438.9378

SEAL

NEW BLGD
FOR
1529 JEFFERSON AVE
MIAMI BEACH, FL
33139

OFFICE COPY
CITY OF MIAMI BEACH
APPROVED FOR PERMIT BY
THE FOLLOWING:
BUILDING:
ZONING:
ORB/HPB:
CONCURRENCY:
PLUMBING:
ELECTRICAL:
MECHANICAL:
FIRE PREVENTION:
ENGINEERING:
PUBLIC WORKS:
STRUCTURAL:
ACCESSIBILITY:
ELEVATOR:
Florida Building Code Sec.

A-6.0
JUNE 6, 2006

DOOR SCHEDULE:

#	SIZE	THICK	MATERIAL	FRAME	GLASS	TYPE	NOTES
1	6'-8 3/4" X 7'0"		GLASS/ALUM	ALUM		SL	FIXED/SLIDING SEE DOOR ELEV
2	3'0"X7'0"	1 3/4"	WOOD	ALUM		SW	
3	2'-10" X 7'0"	1 3/8"	WOOD			SW	
4	2'-10" X 7'0"	1 3/8"	WOOD			PK	TO PROVIDE 32" CLR. OPENING
5	2'-4" X 7'-0"	1 3/8"	METAL			PK	LOUVERED
6	2'-8" X 7'0"	1 3/8"	METAL			BF	FRAMELESS
7	1'-6" X 7'0"	1 3/8"				PK	
8	3'0"X 7'0"	1 3/8"	METAL			BF	FRAMELESS
9	2'-4"X7'0"	1 3/8"	METAL			BF	LOUVERED
10	3'0"X7'0"	1 3/4"	METAL			SW	SELF-CLOSING
11	3'0"X7'0"	1 3/4"	METAL			SW	SELF-CLOSING
12	5'-8"X7'0"	1 3/4"	METAL			SW	
13	2'-2"X7'0"	1 3/4"	METAL			BF	LOUVERED

NOTE: ALL EXTERIOR DOORS UNDER SEPARATE PERMIT

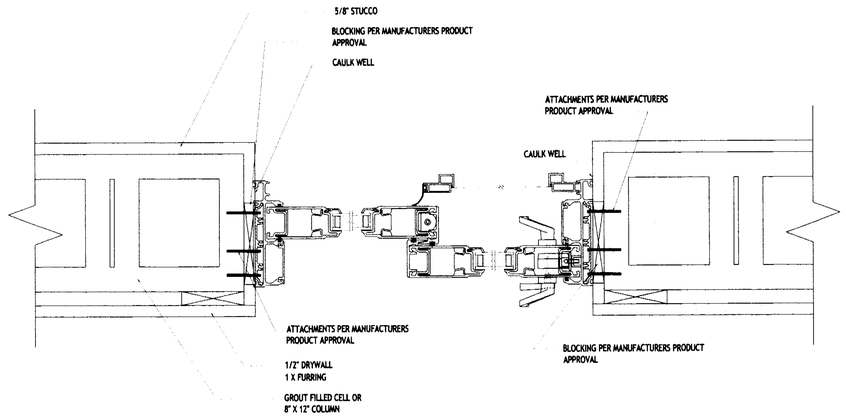

4/A8.7 FIXED & SLIDING GLASS DOOR JAMB DETAIL
SCALE: 3" = 1'-0"

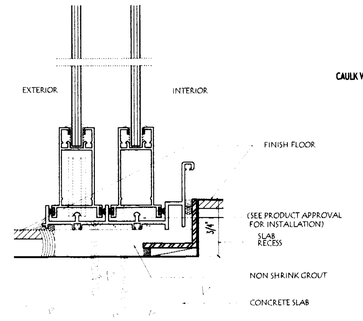

DOOR SILL DETAIL
SCALE: 6" = 1'-0"

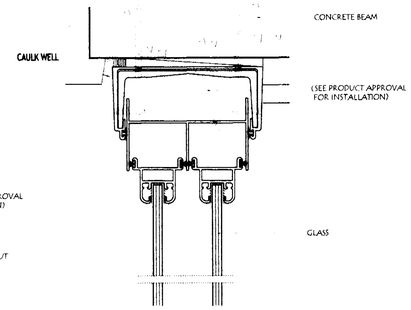

DOOR HEAD DETAIL
SCALE: 6" = 1'-0"

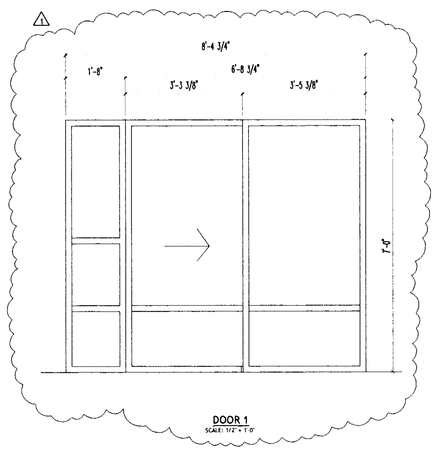

DOOR 1
SCALE: 1/2" = 1'-0"

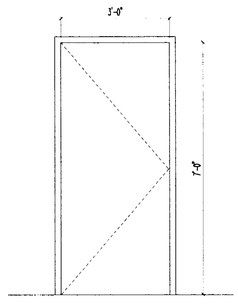

DOOR 2
SCALE: 1/2" = 1'-0"

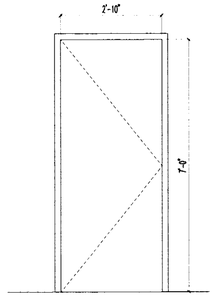

DOOR 3
SCALE: 1/2" = 1'-0"

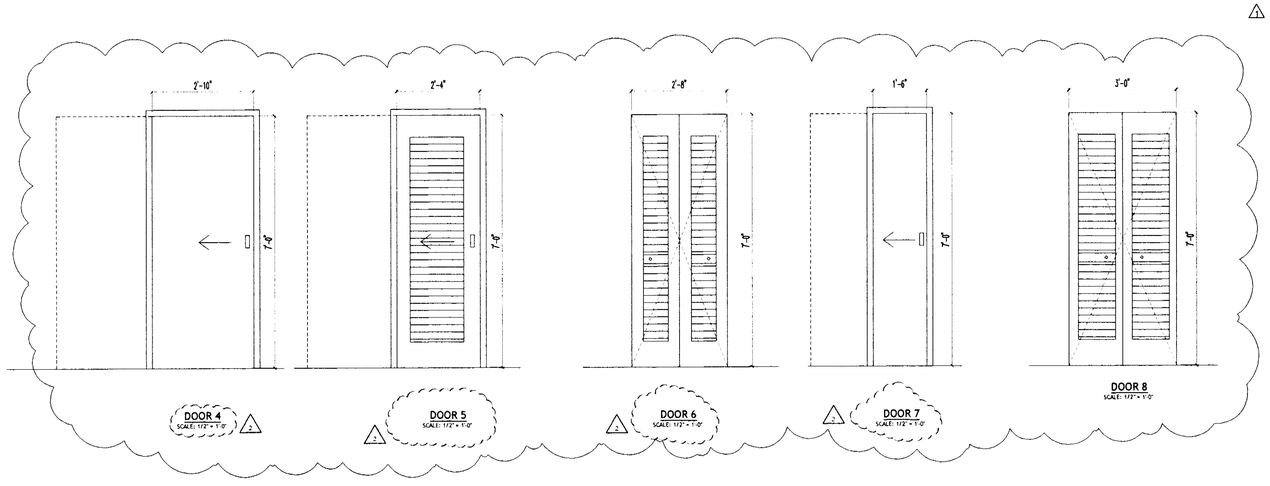

DOOR 4
SCALE: 1/2" = 1'-0"

DOOR 5
SCALE: 1/2" = 1'-0"

DOOR 6
SCALE: 1/2" = 1'-0"

DOOR 7
SCALE: 1/2" = 1'-0"

DOOR 8
SCALE: 1/2" = 1'-0"

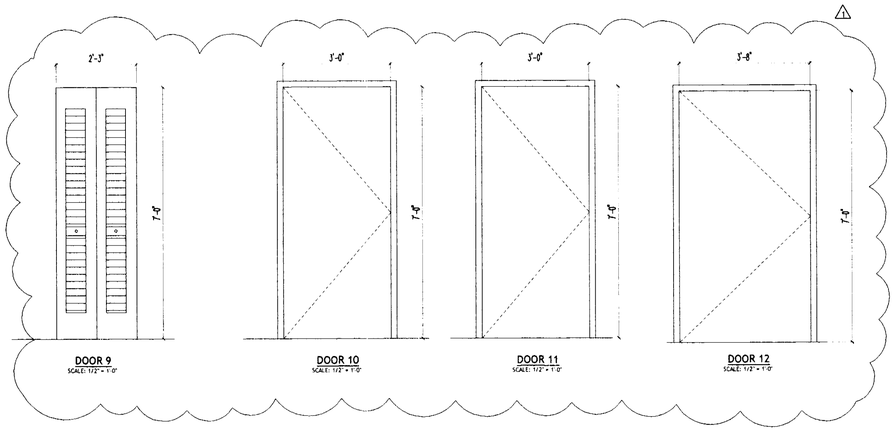

DOOR 9
SCALE: 1/2" = 1'-0"

DOOR 10
SCALE: 1/2" = 1'-0"

DOOR 11
SCALE: 1/2" = 1'-0"

DOOR 12
SCALE: 1/2" = 1'-0"

DRAWN BY:

REVISIONS:

2 01-31-07

1 10.13.06

2DESIGN INC
ANTHONY LEON
AR0007572
ARCHITECTURE
4500 BISCAYNE BLVD. SUITE#004 MIAMI, FL 33137 T 305 438 9377 F 305 438 9378

SEAL

NEW BUILDING
FOR
1529 JEFFERSON AVE
MIAMI BEACH, FL
33139

OFFICE COPY
CITY OF MIAMI BEACH
APPROVED FOR PERMIT BY
THE FOLLOWING:

BUILDING:	3/06/07
ZONING:	
DRB/HPB:	
CONCURRENCY:	
PLUMBING:	
ELECTRICAL:	5/25/07
MECHANICAL:	
FIRE PROTECTION:	
ENGINEERING:	
PUBLIC WORKS:	
STRUCTURAL:	
CCE:	
ALLEN:	
ASST. DIR.:	

A-6.1

JUNE 6, 2006

DOOR SCHEDULE:

#	SIZE	THICK	MATERIAL	FRAME	GLASS	TYPE	NOTES
1	6'-8-3/4" X 7'0"		GLASS/ALUM	ALUM		SL	FIXED/SLIDING SEE DOOR ELEV
2	3'0"X7'0"	1 3/4"	WOOD	ALUM		SW	
3	2'-10" X 7'0"	1 3/8"	WOOD			SW	
4	2'-10" X 7'0"	1 3/8"	WOOD			PK	TO PROVIDE 32" CLR. OPENING
5	2'-8" X 7' 0"	1 3/8"	METAL			BF	FRAMELESS
6	4'-8" X 7'0"	1 3/8"	METAL			BF	FRAMELESS
7	2' X 7'0"	1 3/8"	METAL			BF	FRAMELESS
8	3'0"X 7'0"	1 3/8"	METAL			BF	FRAMELESS
9	2'-3"X7'0"	1 3/8"	METAL			BF	FRAMELESS
10	3'0"X7'0"	1 3/4"	METAL			SW	SELF-CLOSING
11	3'0"X7'0"	1 3/4"	METAL			SW	SELF-CLOSING
12	3'-8"X7'0"	1 3/4"	METAL			SW	

NOTE: ALL EXTERIOR DOORS UNDER SEPARATE PERMIT

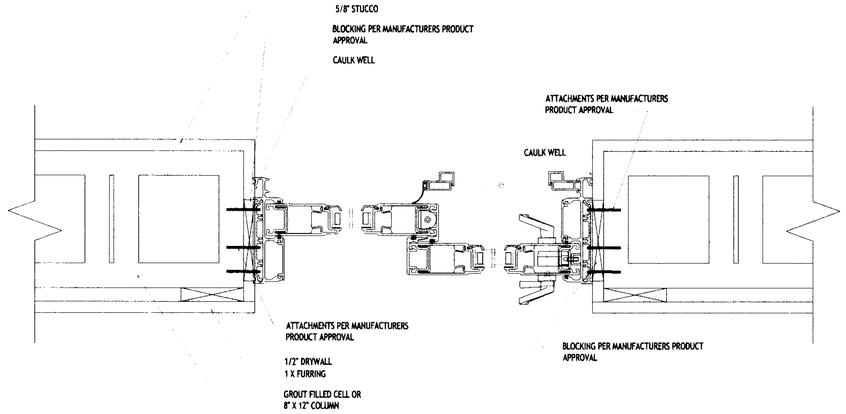

4/A8.2 FIXED & SLIDING GLASS DOOR JAMB DETAIL
SCALE: 3" = 1'-0"

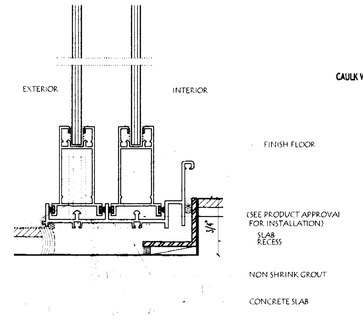

DOOR SILL DETAIL
SCALE: 6" = 1'-0"

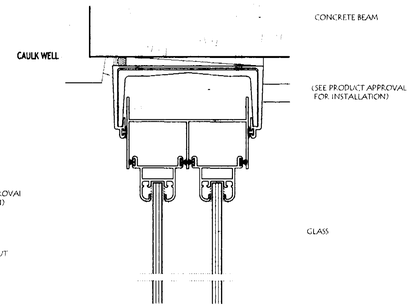

DOOR HEAD DETAIL
SCALE: 6" = 1'-0"

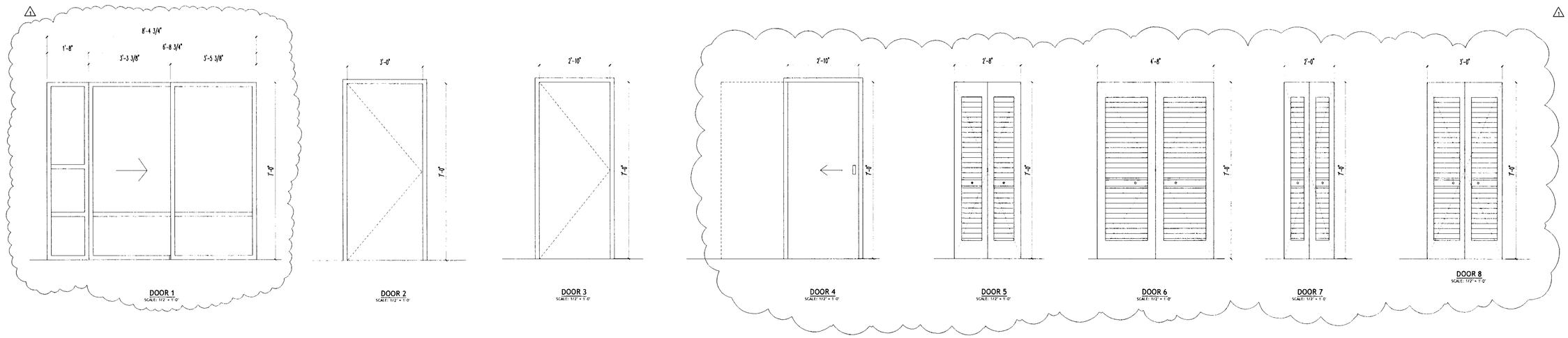

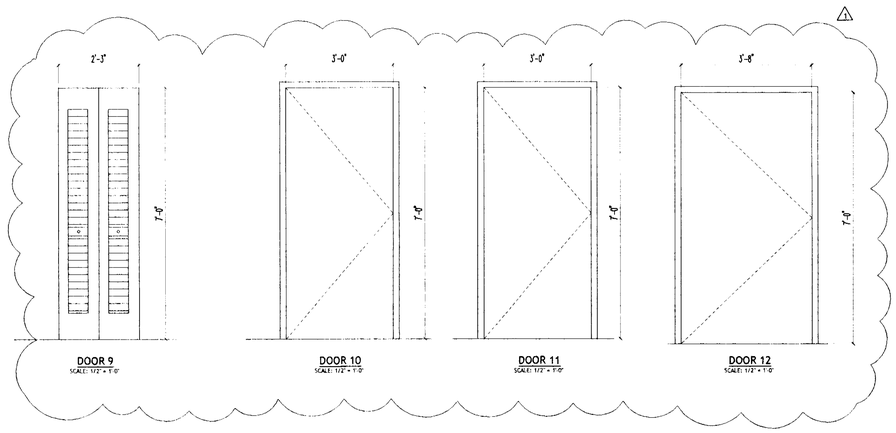

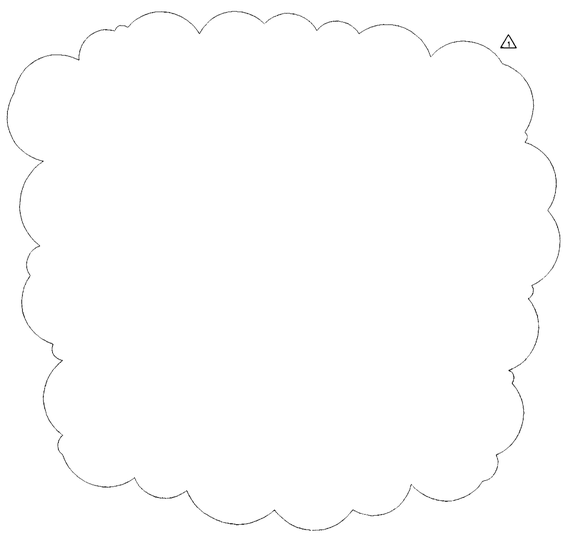

DRAWN BY:

REVISIONS:

△ 10.13.06

3DESIGN, INC
ANTHONY LEON
ARCHITECTURE
AR0013572
4500 BISCAYNE BLVD. SUITE#604 MIAMI, FL 33137 T.305.458.9577 F.305.458.9578

SEAL

NEW BUILDING
FOR
1529 JEFFERSON AVE
MIAMI BEACH, FL
33139

CITY OF MIAMI BEACH
REVIEWED

A-6.1

JUNE 6, 2006

DOOR SCHEDULE:

#	SIZE	THICK.	MATERIAL	FRAME	GLASS	TYPE	NOTES
1	6'11" X 7'0"		GLASS/ALUMINUM			SL	FIXED/SLIDING
2	3'0"X7'0"	1 3/4"	WOOD			SW	
3	2'10" X 7'0"	1 3/4"	WOOD			SW	
4	2'8" X 7'0"	1 3/4"	WOOD			PK	
5	2' 7 3/8" X 7' 0"		METAL			BF	FRAMELESS
6	3' 2-1/4" X 7'0"		METAL			BF	FRAMELESS
7	2' X 7'0"		METAL			BF	FRAMELESS
8	3'9 X 7'0"		METAL			BF	FRAMELESS
9	3'0"X7'0"	1 3/4"	WOOD			SW	
10	3'0"X7'0"	1 3/4"	METAL			SW	
11	2'2 1/2"X7'0"	1 3/4"	METAL			BI	FRAMELESS
12	2'4"X7'0"	1 3/4"	METAL			SW	

NOTE: ALL EXTERIOR DOORS UNDER SEPARATE PERMIT

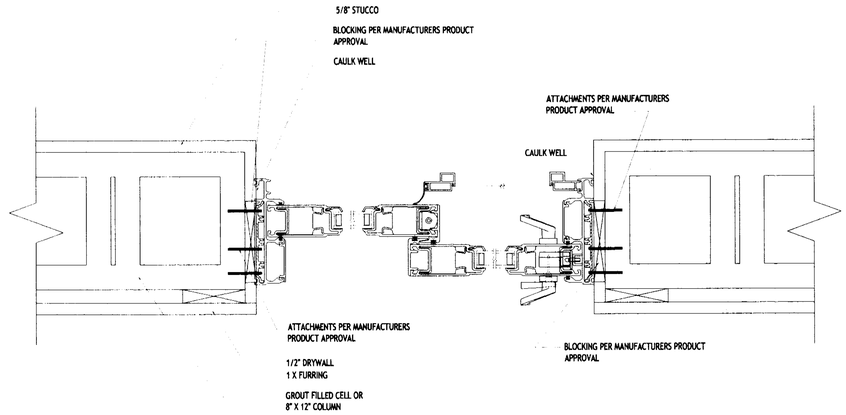

4 / A8.2 FIXED & SLIDING GLASS DOOR JAMB DETAIL
SCALE: 3" = 1'-0"

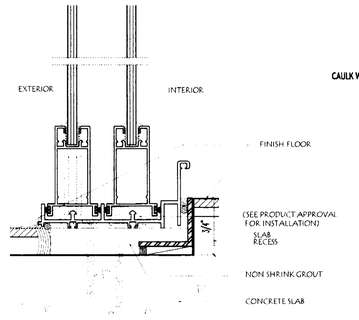

DOOR SILL DETAIL
SCALE: 6" = 1'-0"

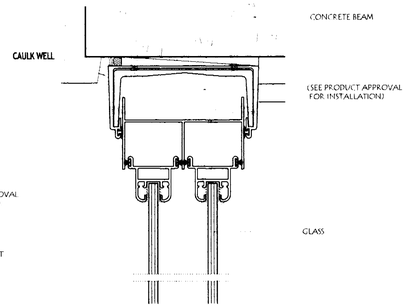

DOOR HEAD DETAIL
SCALE: 6" = 1'-0"

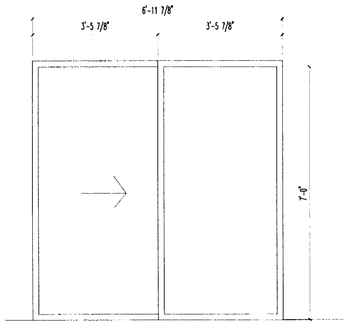

DOOR 1
SCALE: 1/2" = 1'-0"

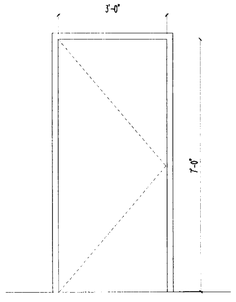

DOOR 2
SCALE: 1/2" = 1'-0"

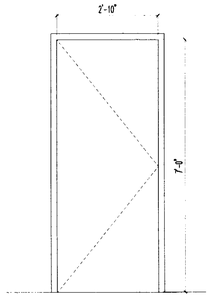

DOOR 3
SCALE: 1/2" = 1'-0"

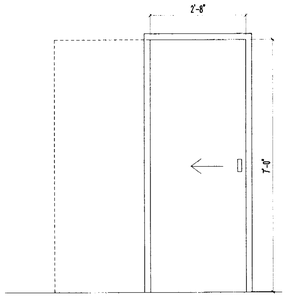

DOOR 4
SCALE: 1/2" = 1'-0"

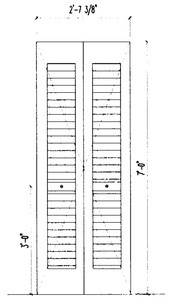

DOOR 5
SCALE: 1/2" = 1'-0"

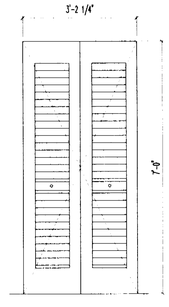

DOOR 6
SCALE: 1/2" = 1'-0"

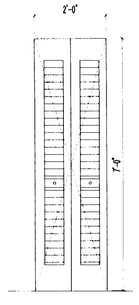

DOOR 7
SCALE: 1/2" = 1'-0"

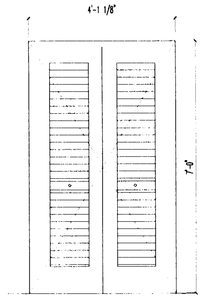

DOOR 8
SCALE: 1/2" = 1'-0"

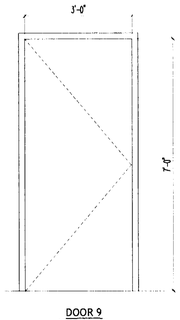

DOOR 9
SCALE: 1/2" = 1'-0"

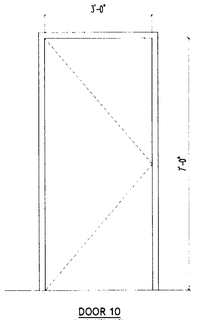

DOOR 10
SCALE: 1/2" = 1'-0"

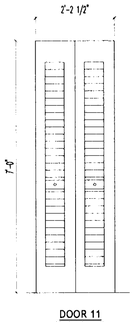

DOOR 11
SCALE: 1/2" = 1'-0"

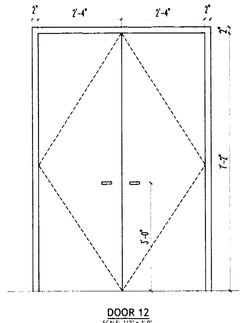

DOOR 12
SCALE: 1/2" = 1'-0"

DRAWN BY:

REVISIONS:

3DESIGN INC
ANTHONY LEON
ARCHITECT
AR0009754
4500 BISCAYNE BLVD. SUITE#604 MIAMI, FL 33137 T.305.438.9577 F.305.438.9578

SEAL

NEW BLDG
FOR
1529 JEFFERSON AVE
MIAMI BEACH, FL
33139

OFFICE COPY
CITY OF MIAMI BEACH
APPROVED FOR PERMIT BY
THE FOLLOWING:

BUILDING:
ZONING:
DRB/HPB:
CONCURRENCY:
PLUMBING:
ELECTRICAL:
MECHANICAL:
FIRE PREVENTION:
ENGINEERING:
PUBLIC WORKS:
STRUCTURAL:
ACCESSIBILITY:
ELEVATOR:

Florida Building Code Sec.

CITY

A-6.1

JUNE 6, 2006

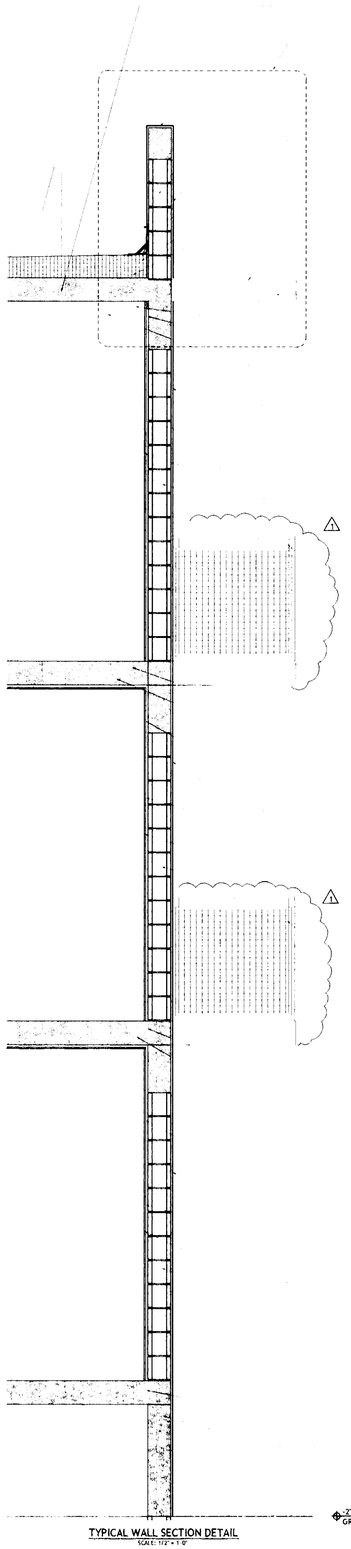

SLABS 1 HR RATED PER FBC TABLE 709.3.1

SEE DETAIL 1

PARAPET

34' 10" TOP. PARAPET

5/8" STUCCO
8" CMU WALL
5/8" STUCCO
FLASHING DETAIL

BUILT-UP ROOF

R-19 NAILABLE TAPERED INSULATION TO PROVIDE SLOPE MIN. 3" THICK

ALL CONC. BALCONIES AND EXTERIOR WALKWAYS TO BE SEALED W/ SEALOFLEX TYPICAL SEE ATTACHED N.O.A. 01-0104.01

30'-8" TOP. ROOF T.O.S

CONCRETE SLAB (SEE STRUCTURAL DRAWINGS)

R-19 INSULATION

3/4" P.T. FURRING STRIP @ 16" O.C.

1/2" DRYWALL

5/8" STUCCO

R-5 FOILBACK PAPER

1/2" DRYWALL

8" CMU WALL

1

METALLIC RAILING, SEE SHEET A7.1

23' 9" 3RD FLOOR T.O.S

SLABS 1 HR RATED PER FBC TABLE 709.3.1

CONCRETE SALAB(SEE STRUCTURAL DRAWINGS)

3/4" P.T. FURRING STRIP @ 16" O.C.

5/8" STUCCO

R-5 FOILBACK PAPER

1/2" DRYWALL

8" CMU WALL

1

METALLIC RAILING, SEE SHEET A7.1

13' 9" 2ND FLOOR T.O.S

SLABS 1 HR RATED PER FBC TABLE 709.3.1

CONCRETE SALAB(SEE STRUCTURAL DRAWINGS)

3/4" P.T. FURRING STRIP @ 16" O.C.

5/8" STUCCO

R-5 FOILBACK PAPER

1/2" DRYWALL

8" CMU WALL

0'-0"(8.00' N.G.V.D) 1ST. FLOOR T.O.S

SLABS 1 HR RATED PER FBC TABLE 709.3.1

CONCRETE SLAB OVER 6 MIL MIN. VAPOR BARRIER (SEE STRUCTURAL DRAWINGS / NOTES)

-2'-11"(5.09' N.G.V.D) GROUND

TYPICAL WALL SECTION DETAIL
SCALE: 1/2" = 1'-0"

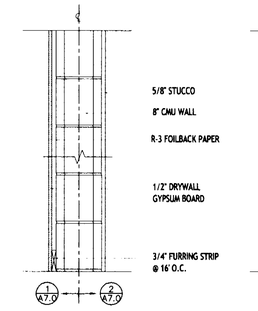

5/8" STUCCO
8" CMU WALL
R-3 FOILBACK PAPER
1/2" DRYWALL GYPSUM BOARD
3/4" FURRING STRIP @ 16" O.C.

1 A7.0 2 A7.0

WALL TYPES
SCALE: 1" = 1'-0"

SEE UL# HW-D-0023 FOR FIRE JOINT DETAIL ON SHEET A-8.0
1 HR FIRE RATED WALL

1

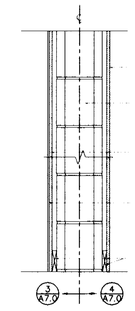

1/2" GREENBOARD WATER RESISTANT
8" CMU WALL
1/2" DUROCK CEMENT BACKER BOARD TYP. ON ALL TUBS/SHOWERS
1/4" TILE
3/4" FURRING STRIP @ 16" O.C.

3 A7.0 4 A7.0

WALL TYPES
SCALE: 1" = 1'-0"

SEE UL# HW-D-0023 FOR FIRE JOINT DETAIL ON SHEET A-8.0
1 HR FIRE RATED WALL

1

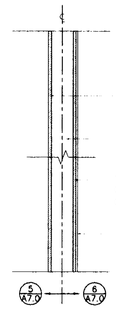

1/2" DRYWALL GYPSUM BOARD
3-5/8" STEEL STUD MIN. 20 GA @ 16" O.C.
1/2" DUROCK CEMENT BACKER BOARD TYP. ON ALL TUBS/SHOWERS
1/4" TILE

5 A7.0 6 A7.0

WALL TYPES
SCALE: 1" = 1'-0"

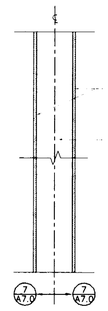

1/2" GREENBOARD WATER RESISTANT
6" STEEL STUD MIN. 20 GA @ 16" O.C.

7 A7.0 7 A7.0

WALL TYPES
SCALE: 1" = 1'-0"

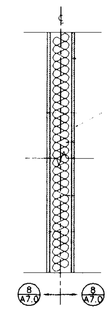

1/2" DUROCK CEMENT BACKER BOARD TYP. ON ALL TUBS/SHOWERS
1/4" TILE
3-5/8" STEEL STUD MIN. 20 GA @ 16" O.C.
3" THERMAFIBER SAFB
1/2" DUROCK CEMENT BACKER BOARD TYP. ON ALL TUBS/SHOWERS

8 A7.0 8 A7.0

WALL TYPES
SCALE: 1" = 1'-0"
SEE UL# U-407
1 HR FIRE RATED WALL

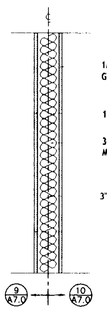

1/2" DRYWALL GYPSUM BOARD
1/4" TILE
3-5/8" STEEL STUD MIN. 20 GA @ 16" O.C.
3" THERMAFIBER SAFB
1/2" DUROCK CEMENT BACKER BOARD TYP. ON ALL TUBS/SHOWERS

9 A7.0 10 A7.0

WALL TYPES
SCALE: 1" = 1'-0"
SEE UL# U-404
1 HR FIRE RATED WALL

1

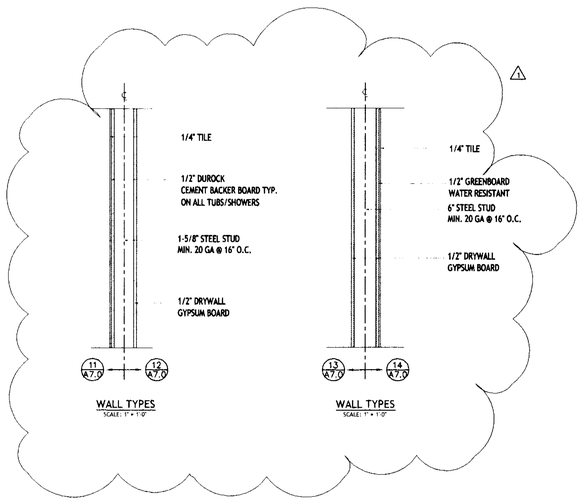

1/4" TILE
1/2" DUROCK CEMENT BACKER BOARD TYP. ON ALL TUBS/SHOWERS
1-5/8" STEEL STUD MIN. 20 GA @ 16" O.C.
1/2" DRYWALL GYPSUM BOARD

11 A7.0 12 A7.0

WALL TYPES
SCALE: 1" = 1'-0"

1/4" TILE
1/2" GREENBOARD WATER RESISTANT
6" STEEL STUD MIN. 20 GA @ 16" O.C.
1/2" DRYWALL GYPSUM BOARD

13 A7.0 14 A7.0

WALL TYPES
SCALE: 1" = 1'-0"

TABLE 709.3.1
MINIMUM EQUIVALENT THICKNESS[1] (in) OF BEARING OR NONBEARING CONCRETE MASONRY WALLS[2, 3, 4]

TYPE OF AGGREGATE	FIRE RESISTANCE RATING (hours)														
	0.50	0.75	1	1.25	1.50	1.75	2	2.25	2.50	2.75	3	3.25	3.50	3.75	4
Pumice or Expanded Slag	1.5	1.9	2.1	2.5	2.7	3.0	3.2	3.4	3.6	3.8	4.0	4.2	4.4	4.5	4.7
Expanded Shale, Clay or Slate	1.8	2.2	2.6	2.9	3.3	3.4	3.6	3.8	4.0	4.2	4.4	4.6	4.8	4.9	5.1
Limestone, Cinders, or Unexpanded Slag	1.9	2.3	2.7	3.1	3.4	3.7	4.0	4.3	4.5	4.8	5.0	5.2	5.5	5.7	5.9
Calcareous Gravel	2.0	2.4	2.8	3.2	3.6	3.9	4.2	4.5	4.8	5.0	5.3	5.5	5.8	6.0	6.2
Siliceous Gravel	2.1	2.6	3.0	3.5	3.9	4.2	4.5	4.8	5.1	5.4	5.7	6.0	6.2	6.5	6.7

For SI: 1 in. = 25.4 mm

Notes:
1. Equivalent thickness is the average thickness of the solid material in the unit. Determine the equivalent thickness in accordance with ASTM C 140.
2. Values between those shown in the table can be determined by direct interpolation.
3. Where combustible members are framed into the wall, the thickness of solid material between the end of each member and the opposite face of the wall, or between members set in from opposite sides, shall not be less than 93% of the thickness shown in the table.
4. Requirements of ASTM C 55, ASTM C 73 or ASTM C 90 shall apply.

METAL FLASHING
METAL COUNTER FLASHING
4" CANT STRIP
BUILT-UP GRAVEL ROOF
TILE
R-19 TAPER NAILABLE INSULATION

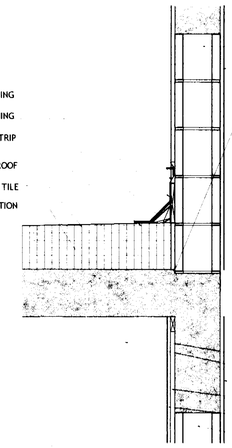

8" CMU
5/8" STUCCO
3/4" CONSTRUCTION JOINT TYPICAL @ SLABS & WALLS
SEALOFLEX WATERPROOFING TYPICAL ALL EXPOSED SLABS AND EYEBROWS NOA # 01-0104.01
3/4" P.T. FURRING STRIP @ 16" O.C.
1/2" DRYWALL
5/8" STUCCO
R-5 FOILBACK PAPER
1/2" DRYWALL
8" CMU WALL

DETAIL 1
SCALE: 1" = 1'-0"

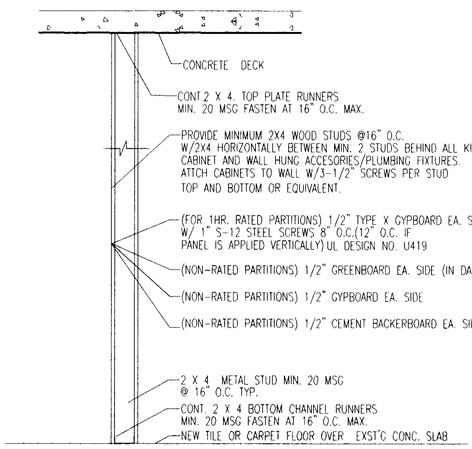

CONCRETE DECK
CONT. 2 X 4. TOP PLATE RUNNERS MIN. 20 MSG FASTEN AT 16" O.C. MAX.
PROVIDE MINIMUM 2X4 WOOD STUDS @16" O.C. W/2X4 HORIZONTALLY BETWEEN MIN. 2 STUDS BEHIND ALL KITCHEN CABINET AND WALL HUNG ACCESORIES/PLUMBING FIXTURES. ATTCH CABINETS TO WALL W/3-1/2" SCREWS PER STUD TOP AND BOTTOM OR EQUIVALENT.
(FOR 1HR. RATED PARTITIONS) 1/2" TYPE X GYPBOARD EA. SIDE W/ 1" S-12 STEEL SCREWS 8" O.C.(12" O.C. IF PANEL IS APPLIED VERTICALLY) UL DESIGN NO. U419
(NON-RATED PARTITIONS) 1/2" GREENBOARD EA. SIDE (IN DAMP AREAS)
(NON-RATED PARTITIONS) 1/2" GYPBOARD EA. SIDE
(NON-RATED PARTITIONS) 1/2" CEMENT BACKERBOARD EA. SIDE (IN WET AREAS)
2 X 4 METAL STUD MIN. 20 MSG @ 16" O.C. TYP.
CONT. 2 X 4 BOTTOM CHANNEL RUNNERS MIN. 20 MSG FASTEN AT 16" O.C. MAX.
NEW TILE OR CARPET FLOOR OVER EXST'G CONC. SLAB

TYPICAL PARTITION WALL DETAIL
SCALE: 1" = 1'-0"

NOTES: TYPICALLY 1/2" GREEN BOARD IS USED IN DAMP AREAS (KITCHEN, BATH & LAUNDRY)
TYPICALLY 1/2" CEMENT BACKER BOARD IS USED IN WET AREAS (TUB & SHOWER SURROUNDS)
TYPICALLY 5/8" STUCCO IS USED ON MASONRY UNITS FACING THE EXTERIOR
TYPICALLY 1/2" TYPE 'X' RATED GYPSUM BOARD IS USED IN 1 HR. RATED PARTITION WALLS

DRAWN BY:

REVISIONS:
1 10.13.06

3DESIGN INC
ANTHONY LEON
ARCHITECTURE
AA0005752
4500 BISCAYNE BLVD. SUITE#404 MIAMI, FL 33137 T 305.458.9577 F 305.458.9578

SEAL

NEW BUILDING FOR
1529 JEFFERSON AVE
MIAMI BEACH, FL
33139

OFFICE COPY
CITY OF MIAMI BEACH
APPROVED FOR PERMIT BY THE FOLLOWING:

BUILDING:	
ZONING:	JUN 2 7 2007
DRB/HPB:	
CONCURRENCY:	
PLUMBING:	
ELECTRICAL:	5/25/07
MECHANICAL:	
FIRE PREVENTION:	
ENGINEERING:	
PUBLIC WORKS:	
STRUCTURAL:	
ACCESS:	
LEVAC:	
ASPHALT:	

A-7.0

JUNE 6, 2006

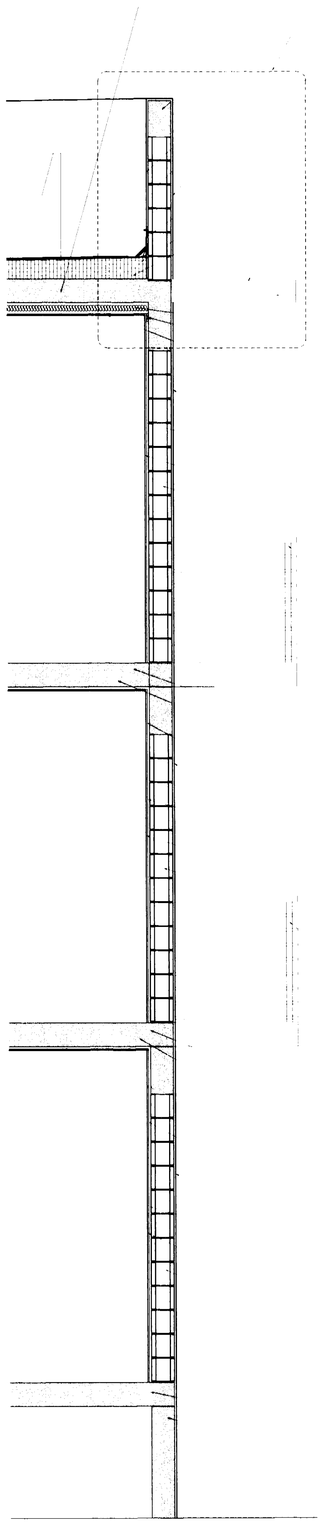

SLABS 1 HR RATED PER FBC TABLE 709.3.1

SEE DETAIL 1

PARAPET

39' 5" TOP. PARAPET

5/8" STUCCO

8" CMU WALL

5/8" STUCCO

FLASHING DETAIL

BUILT-UP ROOF

R-19 NAILABLE TAPERED INSULATION TO PROVIDE SLOPE MIN. 3" THICK

ALL CONC. BALCONIES AND EXTERIOR WALKWAYS TO BE SEALED W/ SEALOFLEX TYPICAL SEE ATTACHED N.O.A. 01-0104.01

34' 6" TOP. ROOF T.O.S

CONCRETE SLAB (SEE STRUCTURAL DRAWINGS)

R-19 INSULATION

3/4" P.T. FURRING STRIP @ 16" O.C.

1/2" DRYWALL

5/8" STUCCO

R-5 FOILBACK PAPER

1/2" DRYWALL

8" CMU WALL

METALLIC RAILING, SEE SHEET A7.1

23' 9" 3RD FLOOR T.O.S

SLABS 1 HR RATED PER FBC TABLE 709.3.1

CONCRETE SALAB(SEE STRUCTURAL DRAWINGS)

3/4" P.T. FURRING STRIP @ 16" O.C.

5/8" STUCCO

R-5 FOILBACK PAPER

1/2" DRYWALL

8" CMU WALL

METALLIC RAILING, SEE SHEET A7.1

13' 9" 2ND FLOOR T.O.S

SLABS 1 HR RATED PER FBC TABLE 709.3.1

CONCRETE SALAB(SEE STRUCTURAL DRAWINGS)

3/4" P.T. FURRING STRIP @ 16" O.C.

5/8" STUCCO

R-5 FOILBACK PAPER

1/2" DRYWALL

8" CMU WALL

0'-0" (8.00' N.G.V.D) 1ST. FLOOR T.O.S

SLABS 1 HR RATED PER FBC TABLE 709.3.1

CONCRETE SLAB OVER 6 MIL MIN. VAPOR BARRIER (SEE STRUCTURAL DRAWINGS / NOTES)

-2'-11"(5.09' N.G.V.D) GROUND

TYPICAL WALL SECTION DETAIL

SCALE: 1/2" = 1'-0"

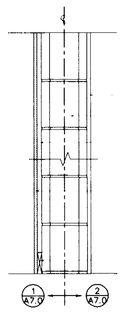

5/8" STUCCO

8" CMU WALL

R-3 FOILBACK PAPER

1/2" DRYWALL GYPSUM BOARD

3/4" FURRING STRIP @ 16" O.C.

1 A7.0 2 A7.0

WALL TYPES

SCALE: 1" = 1'-0"

SEE UL# HW-D-0023 FOR FIRE JOINT DETAIL ON SHEET A-8.0

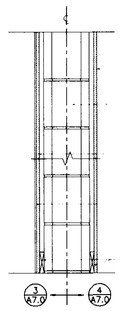

1/2" GREENBOARD WATER RESISTANT

8" CMU WALL

1/2" DUROCK CEMENT BACKER BOARD TYP. ON ALL TUBS/SHOWERS

1/4" TILE

3/4" FURRING STRIP @ 16" O.C.

3 A7.0 4 A7.0

WALL TYPES

SCALE: 1" = 1'-0"

SEE UL# HW-D-0023 FOR FIRE JOINT DETAIL ON SHEET A-8.0

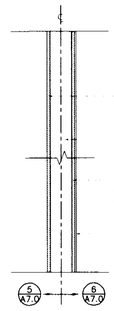

1/2" DRYWALL GYPSUM BOARD

3-5/8" STEEL STUD MIN. 20 GA @ 16" O.C.

1/2" DUROCK CEMENT BACKER BOARD TYP. ON ALL TUBS/SHOWERS

1/4" TILE

5 A7.0 6 A7.0

WALL TYPES

SCALE: 1" = 1'-0"

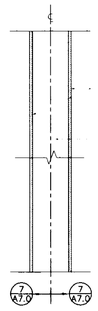

1/2" GREENBOARD WATER RESISTANT

6" STEEL STUD MIN. 20 GA @ 16" O.C.

7 A7.0 7 A7.0

WALL TYPES

SCALE: 1" = 1'-0"

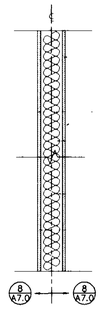

1/2" DUROCK CEMENT BACKER BOARD TYP. ON ALL TUBS/SHOWERS

1/4" TILE

3-5/8" STEEL STUD MIN. 20 GA @ 16" O.C.

3" THERMAFIBER SAFB

1/2" DUROCK CEMENT BACKER BOARD TYP. ON ALL TUBS/SHOWERS

8 A7.0 8 A7.0

WALL TYPES

SCALE: 1" = 1'-0"

SEE UL# U-407

1 HR FIRE RATED WALL

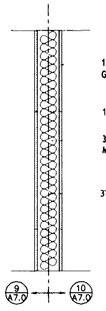

1/2" DRYWALL GYPSUM BOARD

1/4" TILE

3-5/8" STEEL STUD MIN. 20 GA @ 16" O.C.

3" THERMAFIBER SAFB

1/2" DUROCK CEMENT BACKER BOARD TYP. ON ALL TUBS/SHOWERS

9 A7.0 10 A7.0

WALL TYPES

SCALE: 1" = 1'-0"

SEE UL# U-404

1 HR FIRE RATED WALL

TABLE 709.3.1
MINIMUM EQUIVALENT THICKNESS[1] (In) OF BEARING OR NONBEARING CONCRETE MASONRY WALLS[2, 3, 4]

TYPE OF AGGREGATE	FIRE RESISTANCE RATING (hours)														
	0.50	0.75	1	1.25	1.50	1.75	2	2.25	2.50	2.75	3	3.25	3.50	3.75	4
Pumice or Expanded Slag	1.5	1.9	2.1	2.5	2.7	3.0	3.2	3.4	3.6	3.8	4.0	4.2	4.4	4.5	4.7
Expanded Shale, Clay or Slate	1.8	2.2	2.6	2.9	3.3	3.4	3.6	3.8	4.0	4.2	4.4	4.6	4.8	4.9	5.1
Limestone, Cinders, or Unexpanded Slag	1.9	2.3	2.7	3.1	3.4	3.7	4.0	4.3	4.5	4.8	5.0	5.2	5.5	5.7	5.9
Calcareous Gravel	2.0	2.4	2.8	3.2	3.6	3.9	4.2	4.5	4.8	5.0	5.3	5.5	5.8	6.0	6.2
Siliceous Gravel	2.1	2.6	3.0	3.5	3.9	4.2	4.5	4.8	5.1	5.4	5.7	6.0	6.2	6.5	6.7

For SI: 1 in. = 25.4 mm

Notes:

1. Equivalent thickness is the average thickness of the solid material in the unit. Determine the equivalent thickness in accordance with ASTM C 140.
2. Values between those shown in the table can be determined by direct interpolation.
3. Where combustible members are framed into the wall, the thickness of solid material between the end of each member and the opposite face of the wall, or between members set in from opposite sides, shall not be less than 93% of the thickness shown in the table.
4. Requirements of ASTM C 55, ASTM C 73 or ASTM C 90 shall apply.

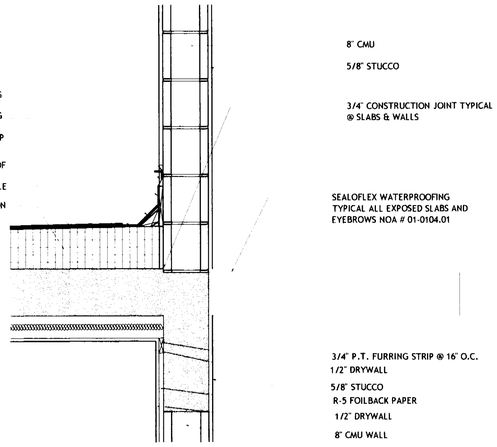

METAL FLASHING

METAL COUNTER FLASHING

4" CANT STRIP

BUILT-UP GRAVEL ROOF

TILE

R-19 TAPER NAILABLE INSULATION

8" CMU

5/8" STUCCO

3/4" CONSTRUCTION JOINT TYPICAL @ SLABS & WALLS

SEALOFLEX WATERPROOFING TYPICAL ALL EXPOSED SLABS AND EYEBROWS NOA # 01-0104.01

3/4" P.T. FURRING STRIP @ 16" O.C.

1/2" DRYWALL

5/8" STUCCO

R-5 FOILBACK PAPER

1/2" DRYWALL

8" CMU WALL

DETAIL 1

SCALE: 1" = 1'-0"

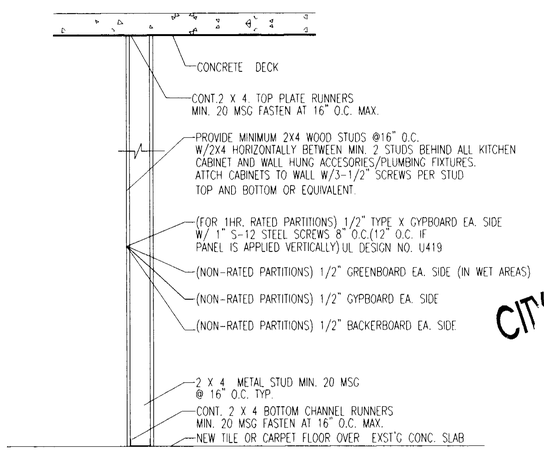

CONCRETE DECK

CONT.2 X 4. TOP PLATE RUNNERS MIN. 20 MSG FASTEN AT 16" O.C. MAX.

PROVIDE MINIMUM 2X4 WOOD STUDS @16" O.C. W/2X4 HORIZONTALLY BETWEEN MIN. 2 STUDS BEHIND ALL KITCHEN CABINET AND WALL HUNG ACCESORIES/PLUMBING FIXTURES. ATTCH CABINETS TO WALL W/3-1/2" SCREWS PER STUD TOP AND BOTTOM OR EQUIVALENT.

(FOR 1HR. RATED PARTITIONS) 1/2" TYPE X GYPBOARD EA. SIDE W/ 1" S-12 STEEL SCREWS 8" O.C.(12" O.C. IF PANEL IS APPLIED VERTICALLY) UL DESIGN NO. U419

(NON-RATED PARTITIONS) 1/2" GREENBOARD EA. SIDE (IN WET AREAS)

(NON-RATED PARTITIONS) 1/2" GYPBOARD EA. SIDE

(NON-RATED PARTITIONS) 1/2" BACKERBOARD EA. SIDE

2 X 4 METAL STUD MIN. 20 MSG @ 16" O.C. TYP.

CONT. 2 X 4 BOTTOM CHANNEL RUNNERS MIN. 20 MSG FASTEN AT 16" O.C. MAX.

NEW TILE OR CARPET FLOOR OVER EXST'G CONC. SLAB

TYPICAL PARTITION WALL DETAIL

SCALE: 1" = 1'-0"

NOTES: TYPICALLY 1/2" GREEN BOARD IS USED IN WET AREAS (KITCHEN, BATH & LAUNDRY)
TYPICALLY 1/2" CEMENT BACKER BOARD IS USED IN WET AREAS (TUB & SHOWER SURROUNDS)
TYPICALLY 5/8" STUCCO IS USED ON MASONRY UNITS FACING THE EXTERIOR
TYPICALLY 1/2" TYPE 'X' RATED GYPSUM BOARD IS USED IN 1 HR. RATED PARTITION WALLS

3DESIGN INC
ANTHONY LEON ARCHITECTS
4500 BISCAYNE BLVD. SUITE#604 MIAMI, FL 33137 T.305.438.9377 F.305.438.9378

DRAWN BY:

REVISIONS:

SEAL

NEW BLGD FOR 1529 JEFFERSON AVE MIAMI BEACH, FL 33139

OFFICE COPY
CITY OF MIAMI BEACH
APPROVED FOR PERMIT BY THE FOLLOWING:

BUILDING:
ZONING:
DRB/HPB:
CONCURRENCY:
PLUMBING:
ELECTRICAL:
MECHANICAL:
FIRE PREVENTION:
ENGINEERING:
PUBLIC WORKS:
STRUCTURAL:
ACCESSIBILITY:
ELEVATOR:

As per Florida Building Code 2004
REVIEWED BY: NODE 05

CITY OF MIAMI BEACH

A-7.0

JUNE 6, 2006

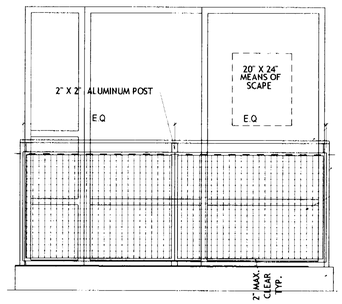

EAST ELEV. TYPICAL RAIL
SCALE: 1/2" = 1'-0"

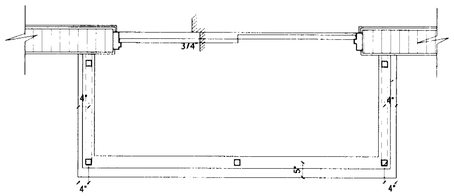

EAST ELEV. TYPICAL RAIL PLAN
SCALE: 1/2" = 1'-0"

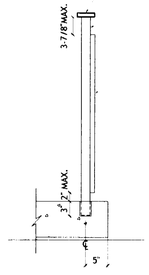

4"X1" ALUMINUM GUARD RAIL

2"X2" ALUMINUM POST

DECORATIVE PERFORATED METAL PLUS REF. 29 (3/8" SQ X1/2" STRT) PROVIDE SHOP DWG'S TO ARCH/ENG. PRIOR TO FABRICATION. COLOR TO BE METALLIC GRAY

ALUMINUM GUARDRAIL DETAIL
SCALE: 3/4" = 1'-0"

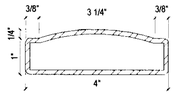

ALUMINUM GUARDRAIL PROFILE DETAIL
SCALE: 6" = 1'-0"

4" X 1" ALUMINUM GUARDRAIL

2" X 2" ALUMINUM POST

DECORATIVE PERFORATED METAL PLUS REF. 29 (3/8" SQ X1/2" STRT) PROVIDE SHOP DWG'S TO ARCH/ENG. PRIOR TO FABRICATION. COLOR TO BE METALLIC GRAY

STUCCO

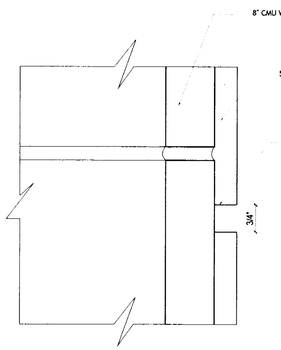

SCORE STUCCO DETAIL
SCALE: 6" = 1'-0"

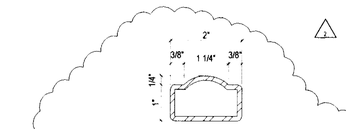

ALUMINUM HANDRAIL PROFILE DETAIL
SCALE: 6" = 1'-0"
EXTERIOR ONLY

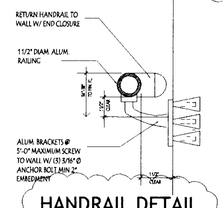

HANDRAIL DETAIL
SCALE: 1/2" = 1'-0"
INTERIOR ONLY

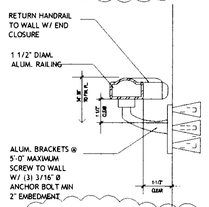

HANDRAIL DETAIL
SCALE: 1/2" = 1'-0"
EXTERIOR ONLY

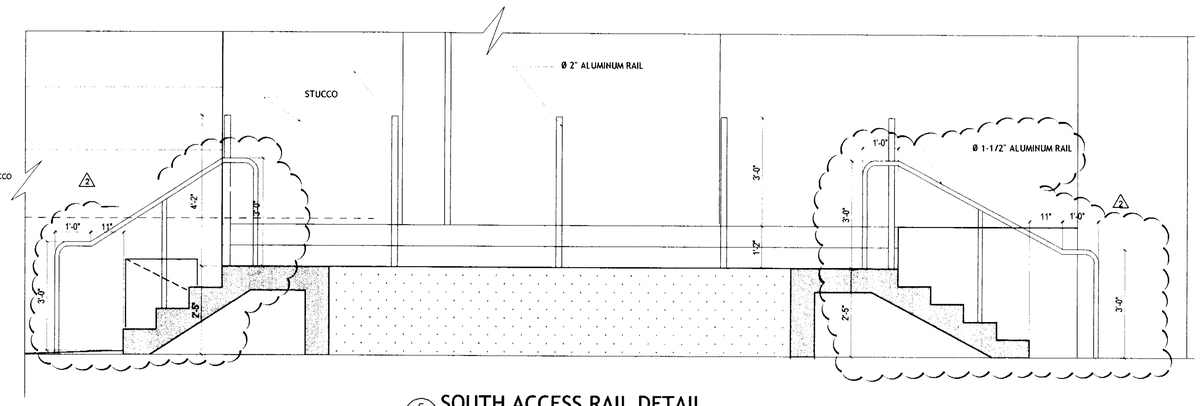

5 A7.1 SOUTH ACCESS RAIL DETAIL
SCALE: 1/2" = 1'-0"

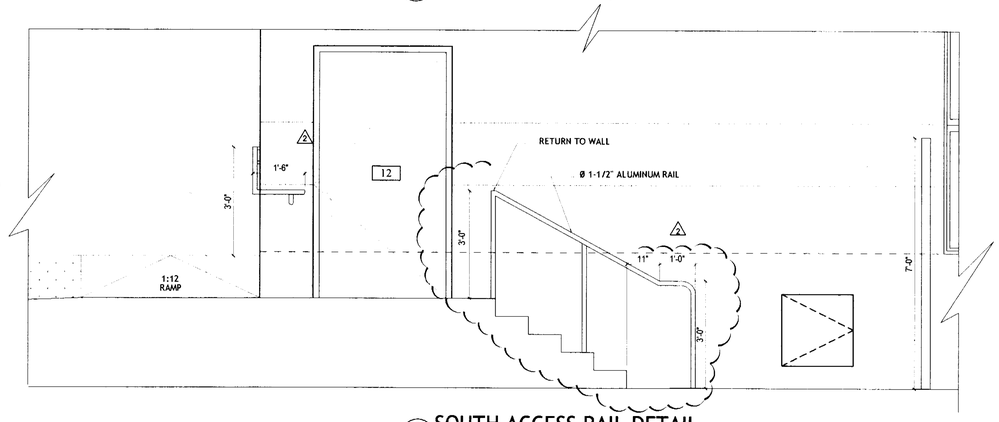

6 A7.1 SOUTH ACCESS RAIL DETAIL
SCALE: 1/2" = 1'-0"

4" X 1" ALUMINUM GUARDRAIL
2" X 2" ALUMINUM POST

DECORATIVE PERFORATED METAL PLUS REF. 29 (3/8" SQ X1/2" STRT) PROVIDE SHOP DWG'S TO ARCH/ENG. PRIOR TO FABRICATION. COLOR TO BE METALLIC GRAY

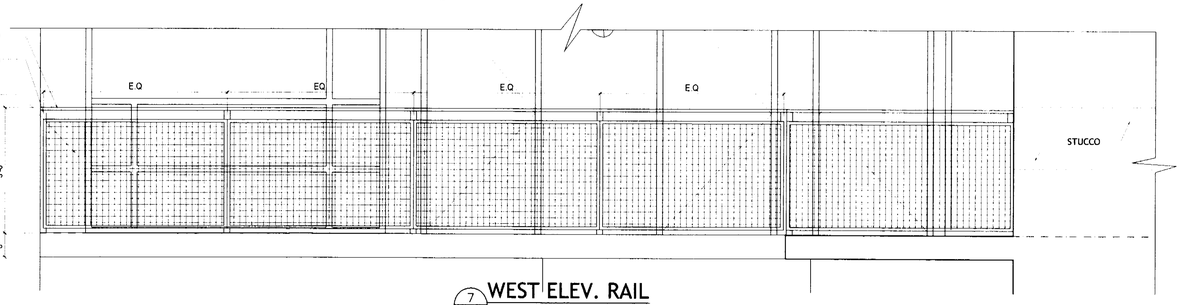

7 A7.1 WEST ELEV. RAIL
SCALE: 1/2" = 1'-0"

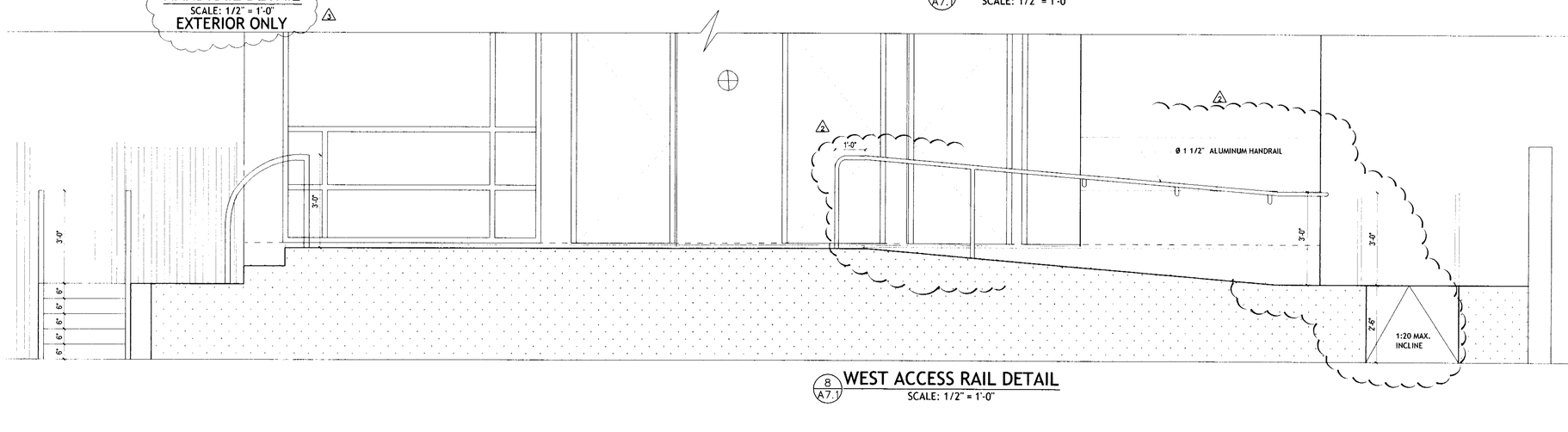

8 A7.1 WEST ACCESS RAIL DETAIL
SCALE: 1/2" = 1'-0"

DRAWN BY:

REVISIONS:
1 04-24-07
2 01.31.07
3 10.13.06

3DESIGN INC
ANTHONY LEON
ARCHITECTURE
AR0026725
4500 BISCAYNE BLVD SUITE#604 MIAMI, FL 33137 T.305.438.9577 F.305.438.9579

SEAL

NEW BUILDING FOR
1529 JEFFERSON AVE
MIAMI BEACH, FL
33139

OFFICE COPY
CITY OF MIAMI BEACH
APPROVED FOR PERMIT BY THE FOLLOWING:
ARCHITECTURAL: JUN 12 2006
PLANNING:
MECHANICAL:
FIRE PREVENTION
ENGINEERING:
PUBLIC WORKS:
STRUCTURAL:
ACCESSIBILITY:

A-7.1
JUNE 6, 2006

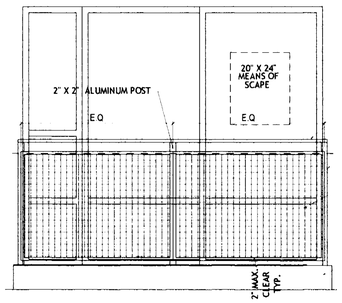

4" X 1" ALUMINUM GUARDRAIL

2" X 2" ALUMINUM POST

DECORATIVE PERFORATED METAL PLUS REF. 29 (3/8" SQ X1/2" STRT)
PROVIDE SHOP DWG'S TO ARCH/ENG. PRIOR TO FABRICATION. COLOR TO BE METALLIC GRAY

STUCCO

EAST ELEV. TYPICAL RAIL
SCALE: 1/2" = 1'-0"

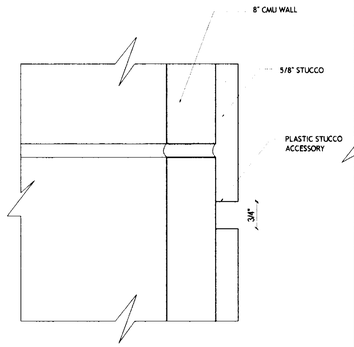

SCORE STUCCO DETAIL
SCALE: 6" = 1'-0"

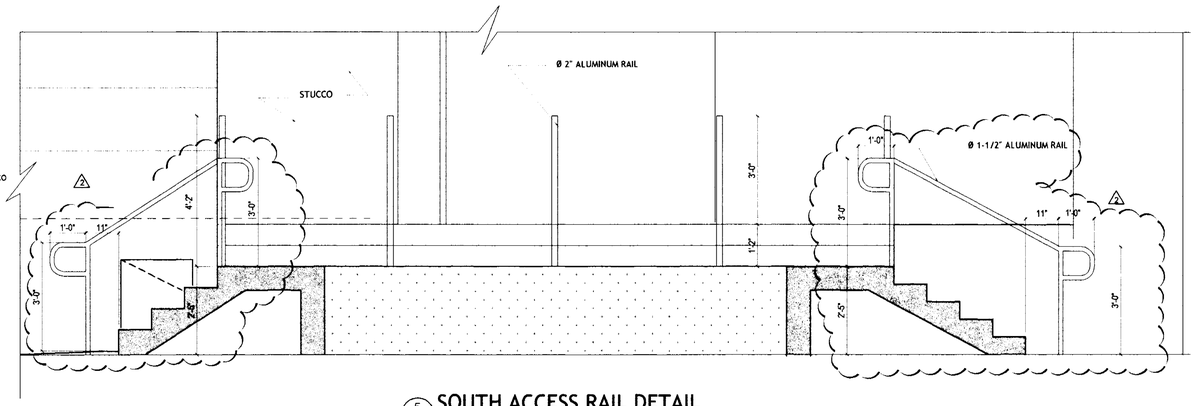

5 A7.1 SOUTH ACCESS RAIL DETAIL
SCALE: 1/2" = 1'-0"

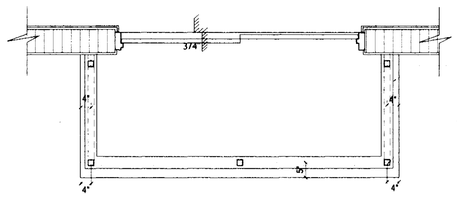

4" X 1" ALUMINUM GUARDRAIL

2" X 2" ALUMINUM POST

EAST ELEV. TYPICAL RAIL PLAN
SCALE: 1/2" = 1'-0"

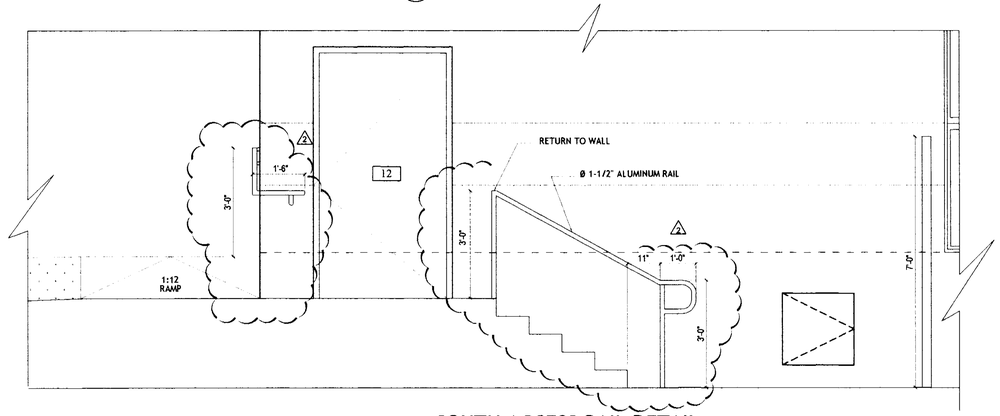

6 A7.1 SOUTH ACCESS RAIL DETAIL
SCALE: 1/2" = 1'-0"

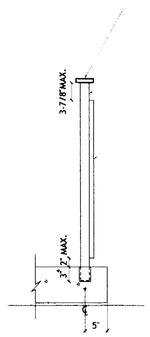

4"X1" ALUMINUM GUARD RAIL

2"X2" ALUMINUM POST

DECORATIVE PERFORATED METAL PLUS REF. 29 (3/8" SQ X1/2" STRT)
PROVIDE SHOP DWG'S TO ARCH/ENG. PRIOR TO FABRICATION. COLOR TO BE METALLIC GRAY

ALUMINUM GUARDRAIL DETAIL
SCALE: 3/4" = 1'-0"

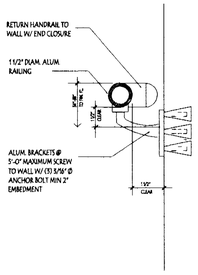

HANDRAIL DETAIL
SCALE: 1/2" = 1'-0"

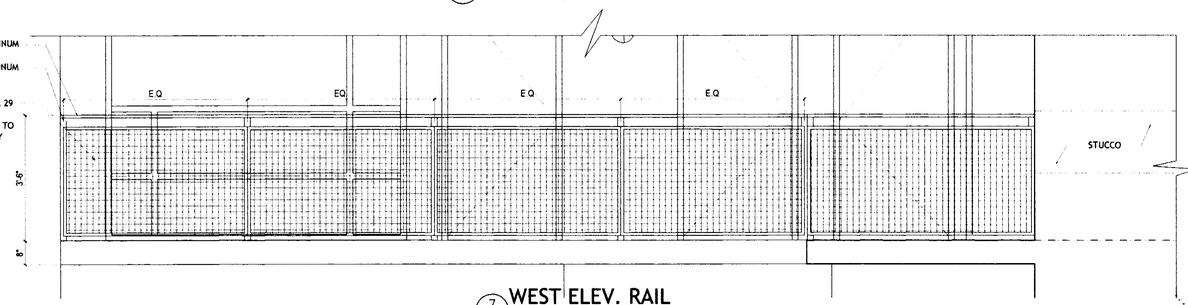

DECORATIVE PERFORATED METAL PLUS REF. 29 (3/8" SQ X1/2" STRT)
PROVIDE SHOP DWG'S TO ARCH/ENG. PRIOR TO FABRICATION. COLOR TO BE METALLIC GRAY

7 A7.1 WEST ELEV. RAIL
SCALE: 1/2" = 1'-0"

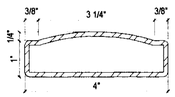

ALUMINUM GUARDRAIL PROFILE DETAIL
SCALE: 6" = 1'-0"

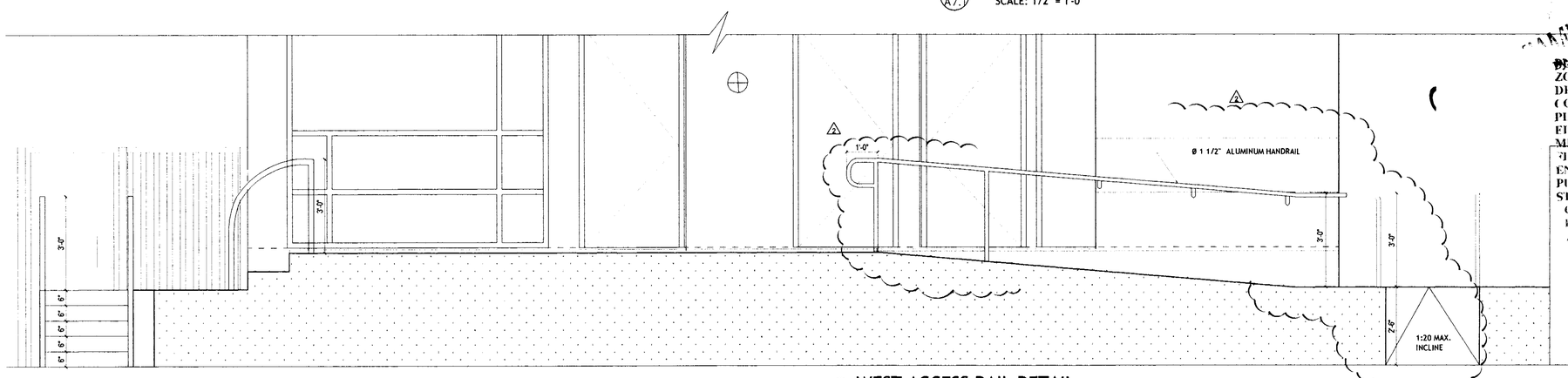

8 A7.1 WEST ACCESS RAIL DETAIL
SCALE: 1/2" = 1'-0"

DRAWN BY:

REVISIONS:

2 01.31.07
1 10.13.06

3DESIGN INC
ANTHONY LEON
A00016752
ARCHITECTURE
4300 BISCAYNE BLVD. SUITE #G04 MIAMI, FL 33137 T.305.438.9377 F.305.438.9378

SEAL

NEW BUILDING FOR
1529 JEFFERSON AVE
MIAMI BEACH, FL
33139

VOID
OFFICE COPY
CITY OF MIAMI BEACH
APPROVED FOR PERMIT BY THE FOLLOWING:
BUILDING: 3/6/07
ZONING:
DRB/HPB:
CONCURRENCY:
PLUMBING:
ELECTRICAL:
MECHANICAL:
FIRE PREVENTION:
ENGINEERING:
PUBLIC WORKS:
STR:

A-7.1

JUNE 6, 2006

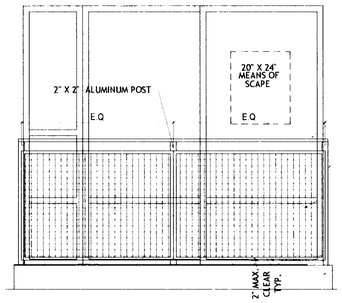

EAST ELEV. TYPICAL RAIL
SCALE: 1/2" = 1'-0"

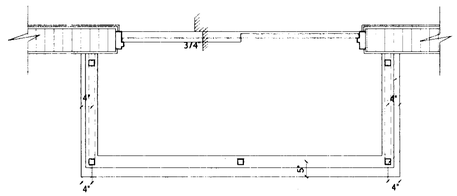

EAST ELEV. TYPICAL RAIL PLAN
SCALE: 1/2" = 1'-0"

4" X 1" ALUMINUM GUARDRAIL

2" X 2" ALUMINUM POST

DECORATIVE PERFORATED METAL PLUS REF. 29 (3/8" SQ X1/2" STRT) PROVIDE SHOP DWG'S TO ARCH/ENG. PRIOR TO FABRICATION. COLOR TO BE METALLIC GRAY

STUCCO

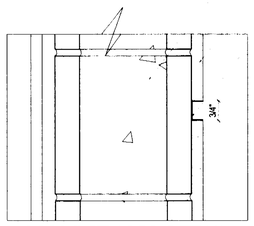

SCORE STUCCO DETAIL
SCALE: 3" = 1'-0"

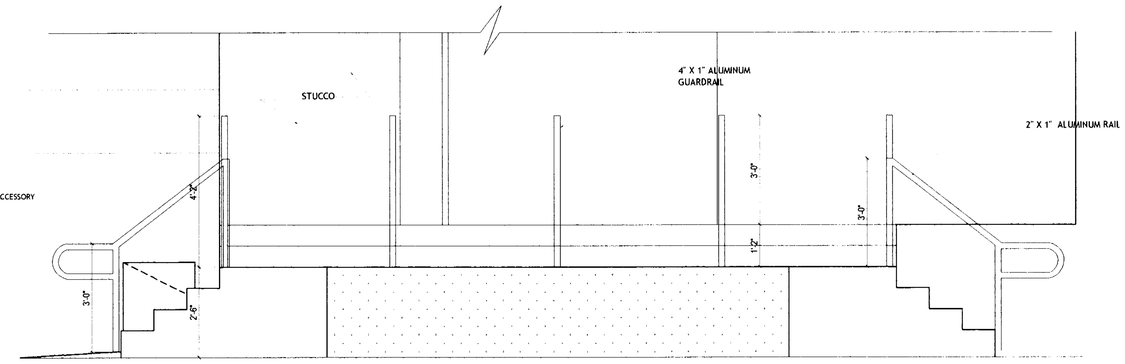

(5/A7.1) SOUTH ACCESS RAIL DETAIL
SCALE: 1/2" = 1'-0"

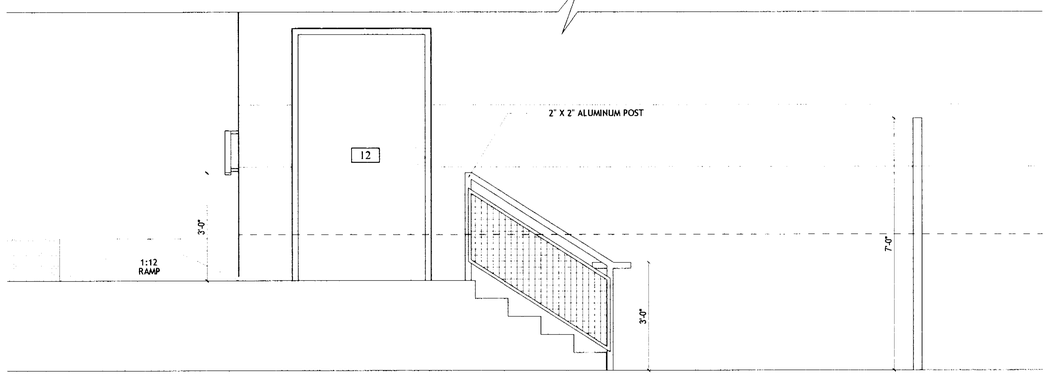

(6/A7.1) SOUTH ACCESS RAIL DETAIL
SCALE: 1/2" = 1'-0"

4"X1" ALUMINUM GUARD RAIL

2"X2" ALUMINUM POST

DECORATIVE PERFORATED METAL PLUS REF. 29 (3/8" SQ X1/2" STRT) PROVIDE SHOP DWG'S TO ARCH/ENG. PRIOR TO FABRICATION. COLOR TO BE METALLIC GRAY

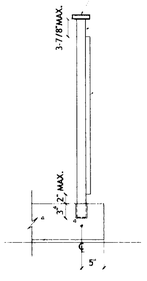

ALUMINUM GUARDRAIL DETAIL
SCALE: 3/4" = 1'-0"

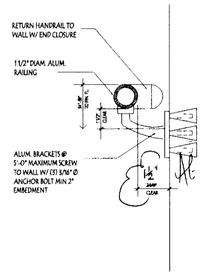

HANDRAIL DETAIL
SCALE: 1/2" = 1'-0"

4" X 1" ALUMINUM GUARDRAIL
2" X 2" ALUMINUM POST

DECORATIVE PERFORATED METAL PLUS REF. 29 (3/8" SQ X1/2" STRT) PROVIDE SHOP DWG'S TO ARCH/ENG. PRIOR TO FABRICATION. COLOR TO BE METALLIC GRAY

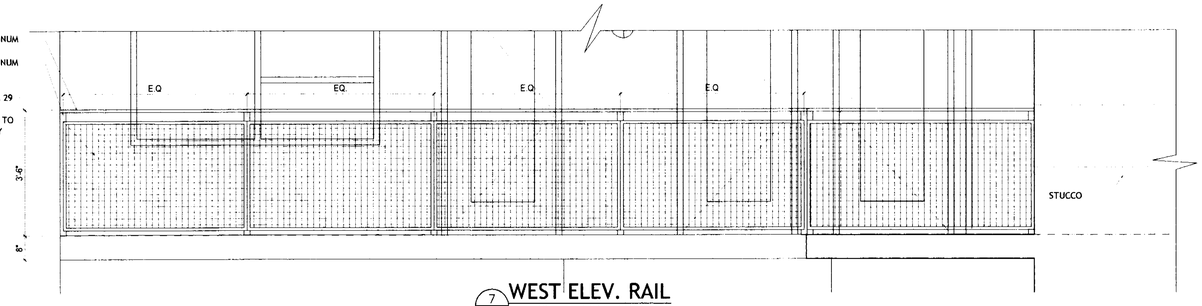

(7/A7.1) WEST ELEV. RAIL
SCALE: 1/2" = 1'-0"

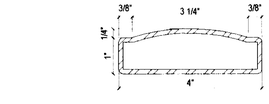

ALUMINUM GUARDRAIL PROFILE DETAIL
SCALE: 6" = 1'-0"

DECORATIVE PERFORATED METAL PLUS REF. 29 (3/8" SQ X1/2" STRT) PROVIDE SHOP DWG'S TO ARCH/ENG. PRIOR TO FABRICATION. COLOR TO BE METALLIC GRAY

2" X 2" ALUMINUM GUARDRAIL

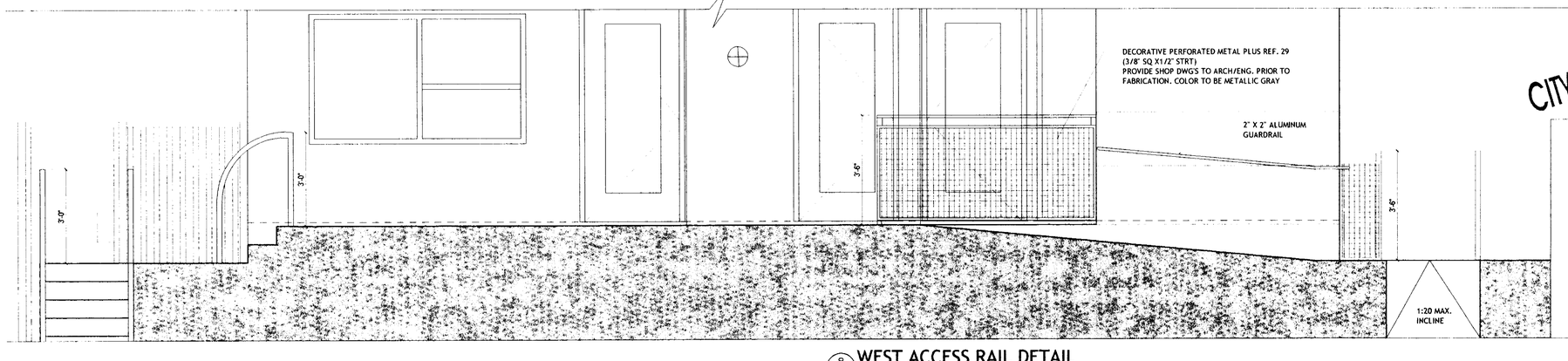

(8/A7.1) WEST ACCESS RAIL DETAIL
SCALE: 1/2" = 1'-0"

DRAWN BY:

REVISIONS:

1 10.13.06

3DESIGN INC
ANTHONY LEON
ARCHITECTURE
AA0006752
4500 BISCAYNE BLVD. SUITE#604 MIAMI, FL 33137 T:305.458.9377 F:305.458.9578

10.16.06
SEAL

NEW BUILDING FOR
1529 JEFFERSON AVE
MIAMI BEACH, FL
33139

CITY OF MIAMI BEACH

VOID

A-7.1

JUNE 6, 2006

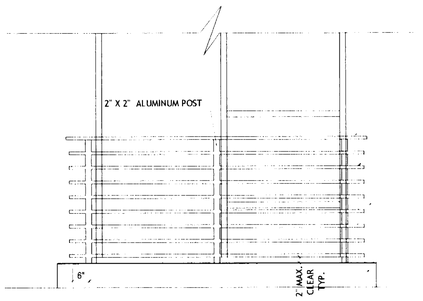

4" X 1" ALUMINUM GUARDRAIL

2" X 1" ALUMINUM RAIL

ATTACH VERTICAL MEMBER TO WALL PAINT TO MATCH ALUM.

STUCCO

EAST ELEV. TYPICAL RAIL
SCALE: 1/2" = 1'-0"

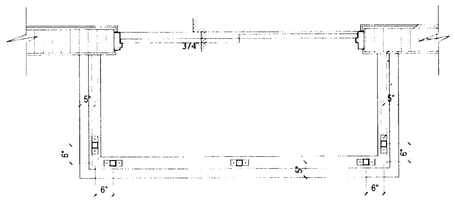

ATTACH VERTICAL MEMBER TO WALL PAINT TO MATCH ALUM.

2" X 1" ALUMINUM RAIL

4" X 1" ALUMINUM GUARDRAIL

2" X 2" ALUMINUM POST

EAST ELEV. TYPICAL RAIL PLAN
SCALE: 1/2" = 1'-0"

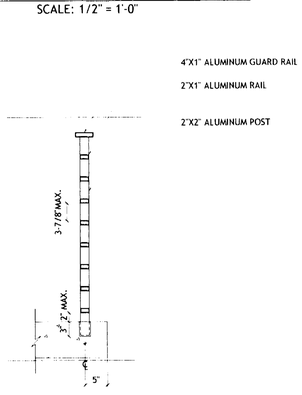

4"X1" ALUMINUM GUARD RAIL

2"X1" ALUMINUM RAIL

2"X2" ALUMINUM POST

ALUMINUM GUARDRAIL DETAIL
SCALE: 3/4" = 1'-0"

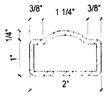

ALUMINUM HANDRAIL PROFILE DETAIL
SCALE: 6" = 1'-0"

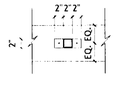

ALUMINUM POST ATTACHMENT
SCALE: 3/4" = 1'-0"

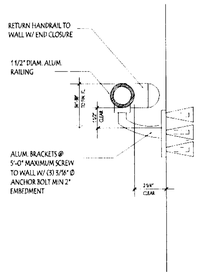

HANDRAIL DETAIL
SCALE: 1/2" = 1'-0"

8" CMU WALL

5/8" STUCCO

PLASTIC STUCCO ACCESSORY

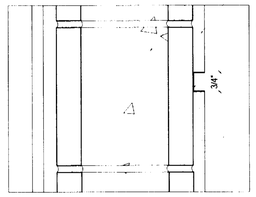

SCORE STUCCO DETAIL
SCALE: 3" = 1'-0"

2" X2" ALUMINUM POST

4" X 1" ALUMINUM GUARDRAIL

2" X 1" ALUMINUM RAIL

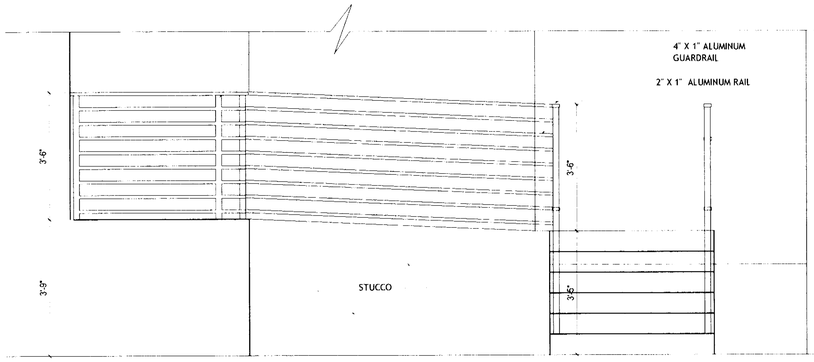

5 A7.1 SOUTH ACCESS RAIL DETAIL
SCALE: 1/2" = 1'-0"

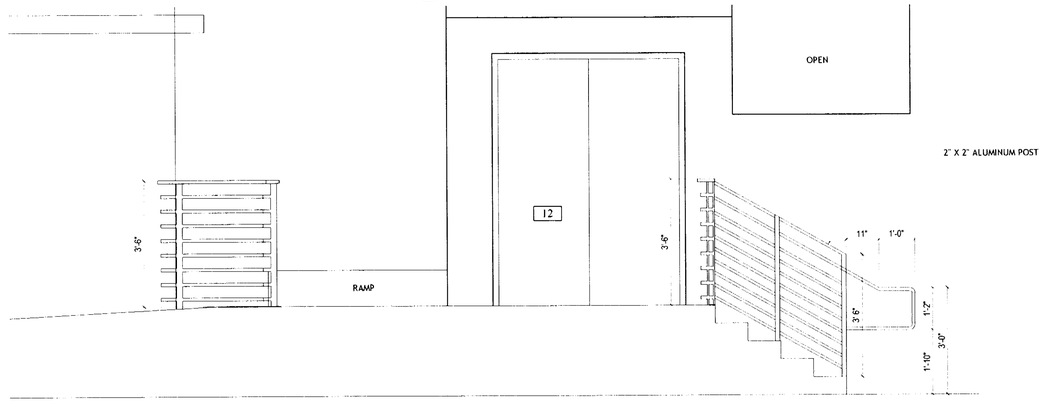

2" X 2" ALUMINUM POST

6 A7.1 SOUTH ACCESS RAIL DETAIL
SCALE: 1/2" = 1'-0"

2" X2" ALUMINUM POST SPACED TO REJECT A 4" DIAMETER SPHERE

4" X 1" ALUMINUM GUARDRAIL

2" X 1" ALUMINUM RAIL

ATTACH VERTICAL MEMBER TO WALL PAINT TO MATCH ALUM.

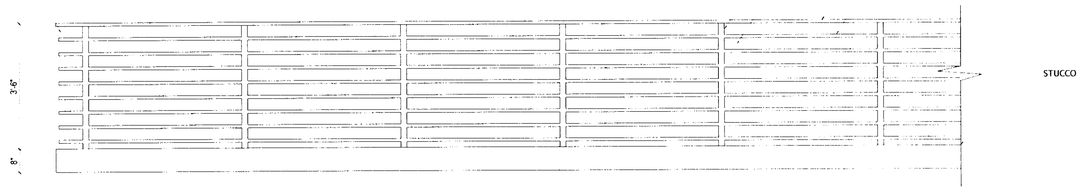

7 A7.1 WEST ELEV. RAIL
SCALE: 1/2" = 1'-0"

ATTACH VERTICAL MEMBER TO WALL PAINT TO MATCH ALUM.

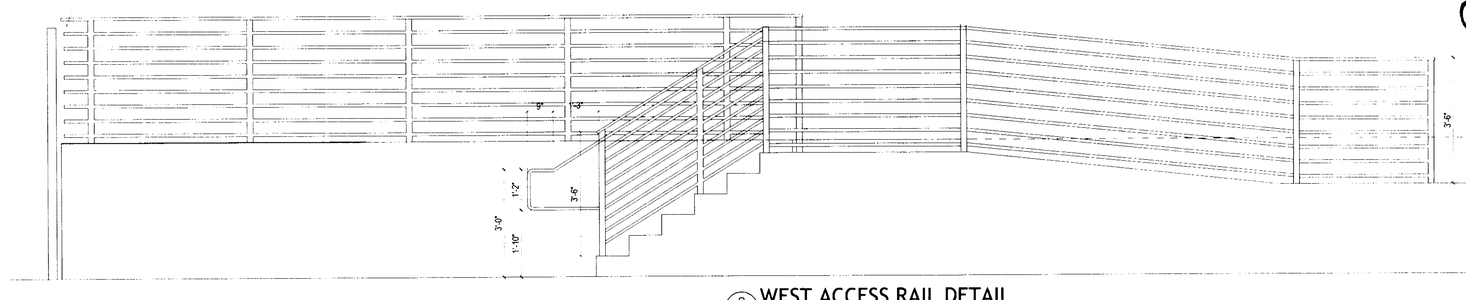

8 A7.1 WEST ACCESS RAIL DETAIL
SCALE: 1/2" = 1'-0"

DRAWN BY:

REVISIONS:

3DESIGN INC
ANTHONY LEON
ARCHITECTURE
ARCHITECTS
4500 BISCAYNE BLVD. SUITE#304 MIAMI, FL 33137 T 305 438 9577 F 305 438 9578

SEAL

NEW BLDG
FOR
1529 JEFFERSON AVE
MIAMI BEACH, FL
33139

OFFICE COPY
CITY OF MIAMI BEACH
APPROVED FOR PERMIT BY
THE FOLLOWING:

BUILDING:
ZONING:
ORB/HPB:
ENGINEERING:
PLUMBING:
ELECTRICAL:
MECHANICAL:
FIRE PREVENTION:
ENGINEERING:
PUBLIC WORKS:
STRUCTURAL:
ACCESSIBILITY:
ELEVATOR:

As per Florida Building Code Section 107
REVIEWED FOR CODE COMPL[illegible]

CITY OF MIAMI BEACH

A-7.1

JUNE 6, 2006

Design No. U404

Bearing Wall Rating — 1 and 2 Hr (See Items 2, 3 and 5)
Nonbearing Wall Rating — 1 and 2 Hr (See Items 2, 3 and 5)

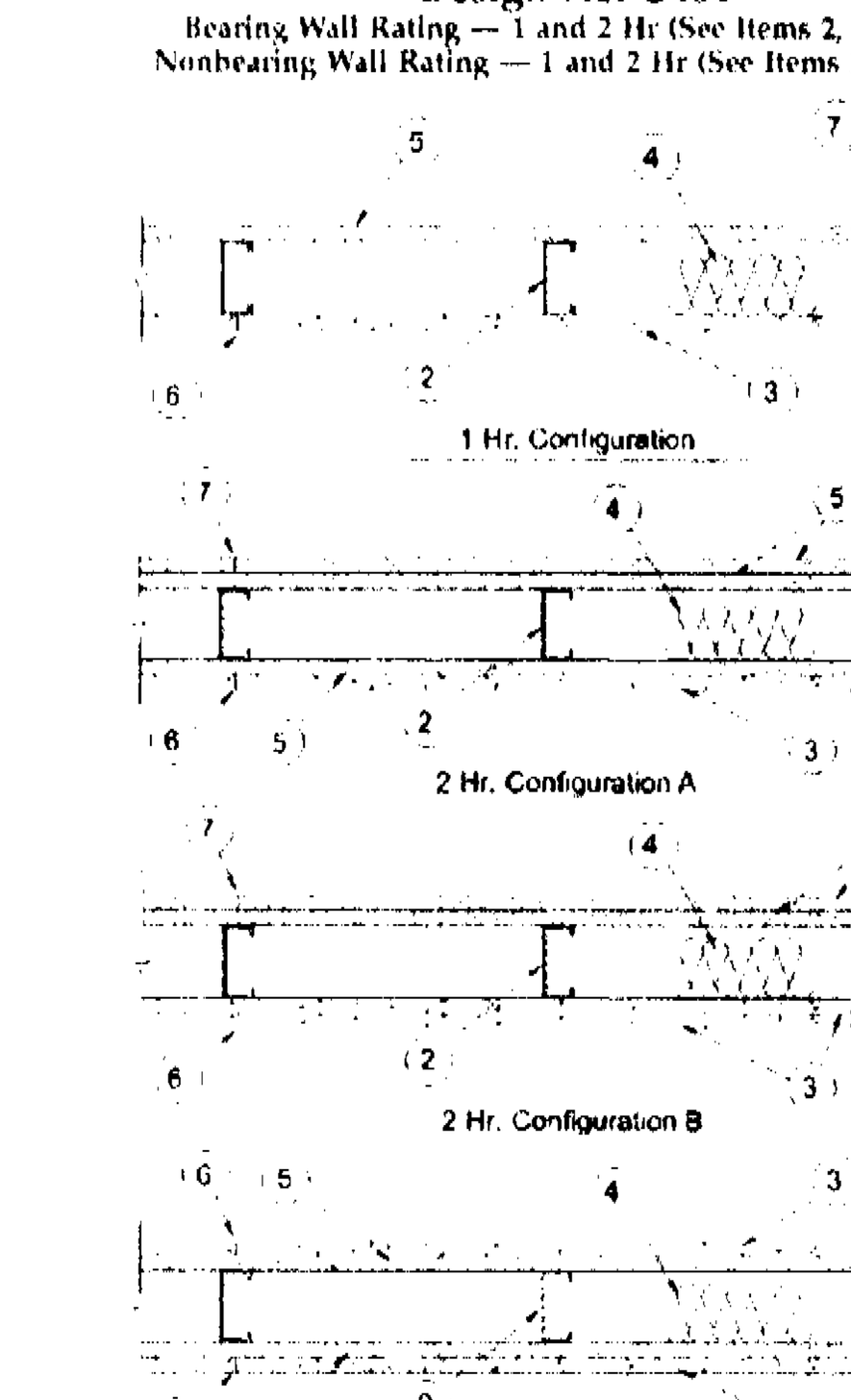

1. **Steel Floor and Ceiling Runners** — (Not Shown) — Channel shaped, 3-1/2 in. wide by 1-1/4 in. deep, fabricated from min 20 MSG (0.0329 in., min bare metal thickness) galvanized steel. Attached to floor and ceiling with steel fasteners spaced 24 in. OC max.
2. **Steel Studs** — 3-1/2 in. wide, fabricated from min 20 MSG (0.0329 in., min bare metal thickness) galvanized steel, spaced max 16 in. OC. For bearing walls, studs shall be designed in accordance with the current edition of the Specification for the Design of Cold-Formed Steel Structural Members by the American Iron and Steel Institute. All design details enhancing the structural integrity of the bearing wall assembly, including the axial design load of the studs, shall be as specified by the steel stud designer and/or producer and shall meet the requirements of all applicable local code agencies. Steel studs attached to floor and ceiling runners with 3/8 in. long Type S-12 steel screws on both sides of the studs or by welded or bolted connections designed in accordance with the AISI specifications. For nonbearing walls, studs to be cut 3/8 to 3/4 in. less than assembly height and friction-fitted into floor and ceiling runners.
3. **Cementitious Backer Units*** — 1/2 in. or 5/8 in. thick, applied vertically or horizontally with vertical joints centered over studs. Fastened to studs and runners with corrosion resistant, chamfered, ribbed wafer head screws with a minimum head diameter of .400 inch. For nonbearing systems, fastened to studs and bottom runners with the uppermost screws placed 1/2 in. to 2 in. below the bottom edge of the leg of the top runner. Horizontal joints need not be backed by framing. **1 Hr System** - Screws shall be min 1-1/4 in. long and spaced a max of 8 in. OC. All vertical joints staggered one stud cavity from gypsum board vertical joints on the opposite side of studs. Horizontal edge joints and horizontal butt joints on opposite sides of studs need not be staggered. **2-Hr System** - For the base layer in Configuration B, the screws shall be min 1-1/4 in. long and spaced a max of 12 in. OC. For the face layers, screws shall be 1-5/8 in. long and spaced a max of 8 in. OC. All face layer joints offset min 12 in. from underlying base layer joints. Joints in either layer need not be staggered from joints on the opposite side of the wall.
   UNITED STATES GYPSUM CO — DUROCK Exterior Cement Board, or DUROCK Brand Cement Board.
4. **Batts and Blankets*** — Min 3 in. thick mineral wool insulation batts, friction-fitted between studs.
   THERMAFIBER INC — Type SAFB.
5. **Gypsum Board*** — 5/8 in. thick, with square or tapered edges, applied vertically or horizontally with vertical joints centered over studs. Horizontal joints need not be backed by framing. Fastened with Type S-12 screws. **1-Hr System** - For vertical application, fastened to studs and runners with 1 in. long screws spaced max 8 in. OC at vertical edges and spaced max 12 in. OC in the field. For horizontal application, fastened to studs and runners with 1 in. long screws spaced max 8 in. OC. Vertical joints staggered one stud cavity from cement board vertical joints on opposite side of studs. Horizontal edge joints and horizontal butt joints on opposite sides of studs need not be staggered. **2-Hr System** - Base layer with an overlying gypsum board face layer, fastened with 1 in. long screws spaced max 16 in. OC to studs and runners. Base layer with an overlying cement board face layer, fastened with 1 in. long screws spaced max 12 in. OC to studs and runners. Face layers fastened with 1-5/8 in. long screws spaced max 16 in. OC to studs and runners with screws offset 8 in. from face layer screws. Face layer joints offset min 12 in. from base layer joints. Joints in either layer need not be staggered from joints on the opposite side of the wall.
   CANADIAN GYPSUM COMPANY — Types AR, C, IP-AR, IP-X1, IP-X2, IPC-AR, SCX, SHX, WRC or WRX.
   UNITED STATES GYPSUM CO — Type AR, C, FRX-G, IP-AR, IP-X1, IP-X2, IPC-AR, SCX, SHX, WRC or WRX.
   USG MEXICO S A DE C V — Types AR, C, IP-AR, IP-X1, IP-X2, IPC-AR, SCX, SHX, WRC, WRX.
6. **Joints** — Covered with glass fiber mesh tape and latex modified Portland cement mortar or basecoat, or Type I organic adhesive.
7. **Joints** — When tapered edge gypsum board is used, face layer joints covered with joint compound and paper tape. As an alternate, gypsum veneer plaster may be applied to the entire surface of Classified veneer baseboard with joints reinforced. When square-edge gypsum board is used, treatment of joints is optional.
8. **Vapor Retarder, Water Barrier or Weather Resistive Barrier** — (Optional — Not shown) — As required.

*Bearing the UL Classification Mark

Design No. U407

Bearing Wall Rating — 1 Hr
Nonbearing Wall Rating — 1 Hr

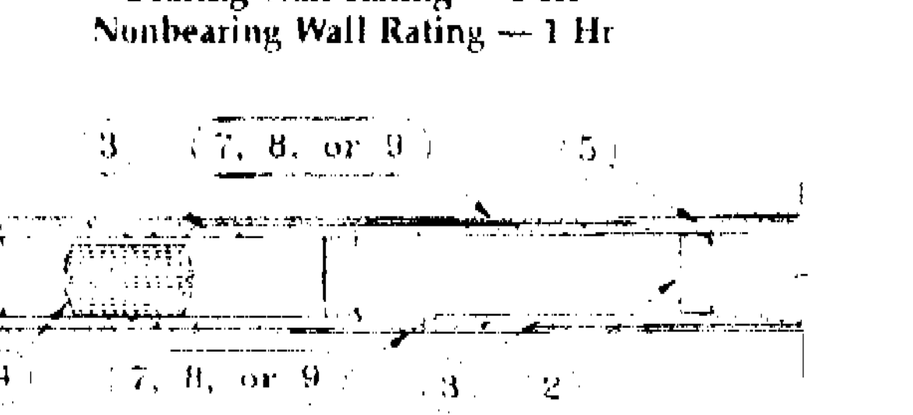

1. **Steel Floor and Ceiling Runners** — (Not Shown) — Channel shaped, 3-1/2 in. wide by 1-1/2 in. deep, fabricated from min 20 MSG (0.0329 in., min. bare metal thickness) corrosion protected steel. Attached to floor and ceiling with steel fasteners spaced 24 in. OC max.
2. **Steel Studs** — 3-1/2 in. wide, fabricated from min 20 MSG (0.0329 in., min. bare metal thickness) corrosion protected steel. Studs shall be designed in accordance with the current edition of the Specification for the Design of Cold-Formed Steel Structural Members by the American Iron and Steel Institute. All design details enhancing the structural integrity of the wall assembly, including the axial design load of the studs, shall be as specified by the steel designer and/or producer and shall meet the requirements of all applicable local code agencies. Studs spaced 16 in. OC max. Steel studs attached to floor and ceiling runners with 1/2 in. long Type S-12 steel screws on both sides of the studs or by welded or bolted connections designed in accordance with the AISI specifications (bearing walls). Studs to be cut 3/4 in. less than assembly height and friction-fitted into floor and ceiling runners (nonbearing walls).
3. **Cementitious Backer Units*** — Nom 5/8 in. thick boards, square edge, attached to studs with 1-1/4 in. long corrosion resistant, wafer head Type S12 steel screws spaced 8 in. OC along the steel studs and 12 in. OC along the top and bottom of the wall. Boards applied either horizontally or vertically. When applied vertically, side joints to be centered over studs; when applied horizontally, butt joints centered over studs. Joint treatment as described in Item 5.
   UNITED STATES GYPSUM CO —DUROCK Exterior Cement Board or DUROCK Brand Cement Board.
4. **Batts and Blankets*** — Nom 3 in. thick mineral wool insulation batts, friction-fitted between studs and ceiling and floor runners.
   USG INTERIORS INC —Type SAFB
5. **Wall and Partition Facings and Accessories*** — Intended as a base preparation for ceramic tile, Item 7, or exterior finish systems, Item 8. USG Exterior Basecoat applied in two coats to joints and screw heads; 2 in. wide fiberglass mesh centered over joints and embedded in first layer of USG Exterior Basecoat.
   UNITED STATES GYPSUM CO — USG Exterior Basecoat
5A. **Joint Tape and Compound** — (Not shown) — As an alternate to Item 5. Intended as a base prepration for veneer plaster, Item 9. USG Plaster Bonder applied over joint, under joint compound. Joints then treated with setting type compound and paper tape.
6. **Vapor Permeable Water Barrier** — (Optional — Not shown) — As required.
7. **Ceramic Tile** — Ceramic tile adhered to cementitious backer units with mortar or adhesive. Tile joints filled with grout.
8. **Exterior Finish System** — In lieu of Item 7 — The exterior finish system consists of the following components.
   A. **Foamed Plastic*** — Aged expanded polystyrene (EPS) board per ASTM C578, with a nom density not less than 1 pcf, R-value 3.8 min per inch, with a flame spread of less than 25 and a smoke developed of less than 450, adhered to the cementitious backer units (Item 3) with USG Exterior Insulation Board Adhesive. See **Foamed Plastic (BRYX and/or CCVW) Categories** for names of Classified companies.
   B. **Wall and Partition Facings and Accessories*** — Min 3/32 in. thick, applied over the cementitious backer units (Item 3) or the insulation board (Item 8A), to embed an open-weave fiberglass mesh (mesh weighing not less than 4.5 oz per sq yd, treated for alkaline resistance). Instructions provided with the product shall be consulted regarding limitations on the use of the product.
      UNITED STATES GYPSUM CO —USG Exterior Basecoat
   C. **Wall and Partition Facings and Accessories*** — Min 1/16 in. thick, applied over USG Exterior Basecoat (Item 8B). Instructions provided with the product shall be consulted regarding limitations on the use of the product.
      UNITED STATES GYPSUM CO —USG Exterior Textured Finish or USG Exterior Stone Finish
9. **Veneer Plaster** — In lieu of Item 7 — Nom 3/32 in. thick gypsum veneer plaster applied to the surface of the cementitious backer units (Item 3). Surface of cementitious backer units must be treated with USG Plaster Bonder prior to the application of the veneer plaster.

*Bearing the UL Classification Mark

System No. HW-S-0004

Assembly Ratings — 1 & 2 Hr (See Items 2, 3B & 3C)
Joint Width — 1 In. Max

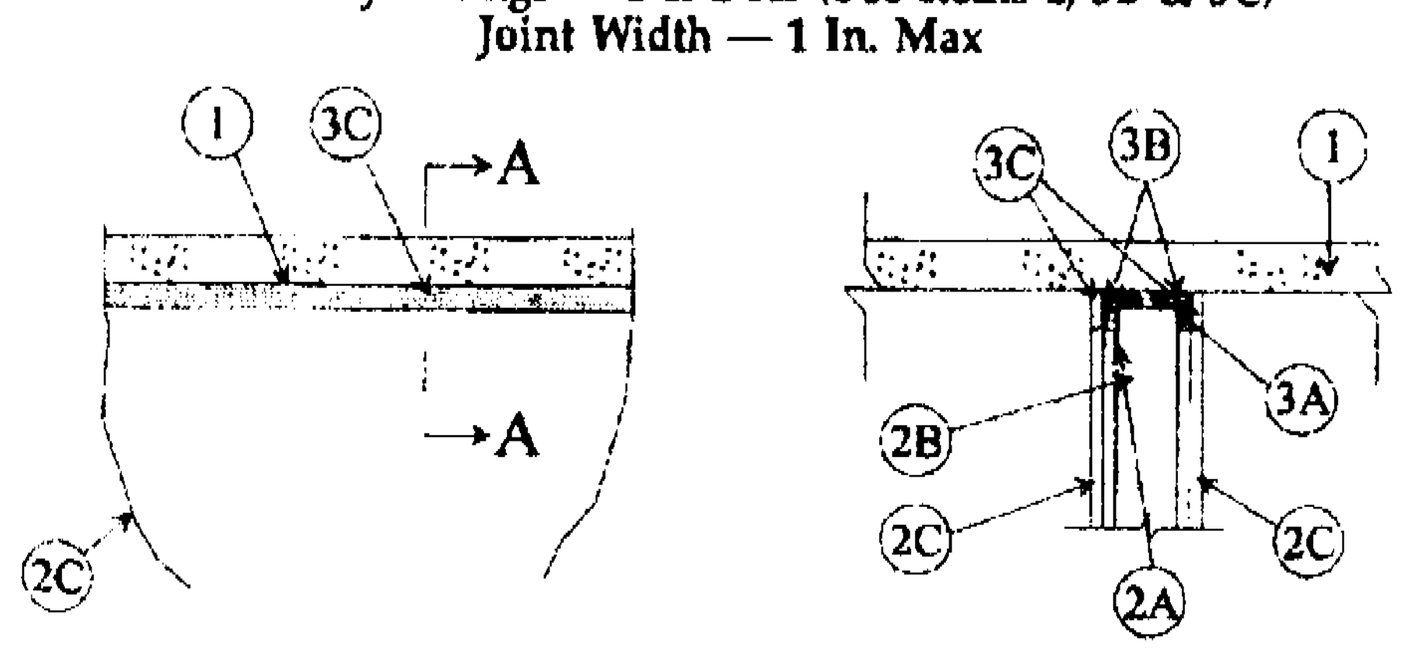

1. **Floor Assembly** — Min 4-1/2 in. thick steel-reinforced lightweight or normal weight (100-150 pcf) structural concrete.
2. **Wall Assembly** — The 1 or 2 hr fire rated gypsum wallboard/stud wall assembly shall be constructed of the materials and in the manner described in the individual U400-Series Wall or Partition Design in the UL Fire Resistance Directory and shall include the following construction features:
   A. **Steel Floor And Ceiling Runners** — Top and bottom runners of wall assembly shall consist of min 5/8 in. wide by 3 in. deep corrosion protected min 25 MSG steel channels. Floor runner secured with steel fasteners spaced max 24 in. O.C. The ceiling runner is installed within the u-shaped deflection plate (item 3A) with a nom 1 in. gap is maintained between the top of the ceiling runner and the top of the deflection plate.
   B. **Studs** — Min 3-5/8 in. wide by 1-1/4 in. deep corrosion protected min 25 MSG steel channels. Steel stud spacing not to exceed 24 in. O.C.
   C. **Wallboard, Gypsum*** — 5/8 in. thick, 4 ft wide with square or tapered edges. Wallboard sheets installed vertically on both sides of stud framing with joints centered over studs. A max 1 in. gap is maintained between the top of the wallboard and the bottom of the concrete floor. The gypsum wallboard type, thickness, number of layers and fastener types shall be as specified in the individual U400-Series Design in the UL Fire Resistance Directory.
3. **Joint System** — Max separation between bottom of floor and top of wall is 1 in. The joint system consists of a deflection plate, packing material and caulk, as follows:
   A. **Deflection Plate** — A nom 4 in. wide by 3 in. deep, min 24 gauge steel u-shaped channel. The deflection plate is attached to the concrete floor with masonry anchors at a max 24 in. O.C. The steel ceiling runner (item 2A) is installed within the deflection plate to maintain a nom 1 in. gap between the top of the ceiling runner and the top of the deflection plate. The ceiling runner is not fastened to the deflection plate.
   B. **Packing Material** — The following packing materials are used:
      Mineral Wool — A 1 in. thickness by 4 in. wide section of min 4 pcf density mineral wool batt insulation is fitted into the 1 in. gap within the deflection plate between the top of the ceiling runner and the deflection plate.
      Polyethylene Backer Rod (2 hr rated system only) — A nom 1-1/4 in. diam polyethylene backer rod friction-fitted into the gap between the top of the gypsum wallboard and the bottom of the concrete deck on both sides of the wall and recessed from each surface of wall to accommodate the required thickness of fill material.
   C. **Fill, Void or Cavity Material*** — A min 5/8 in. thickness of fill material for 1 hr rated systems and a min 1/2 in. thickness of fill material for 2 hr rated systems installed on each side of the wall between the top of the wallboard and bottom of the concrete floor.
      MINNESOTA MINING & MFG CO —CP-25 WB+

*Bearing the UL Classification Marking

System No. HW-D-0023

Assembly Ratings — 2 Hr
L Rating at Ambinet — Less than 1 CFM/Lin Ft.
L Rating a 400 F — Less than 1 CFM/Lin Ft.
Nominal Joint Width — 1 In.
Class II Movement Capabilities — 18.75% Compression Or Extension.

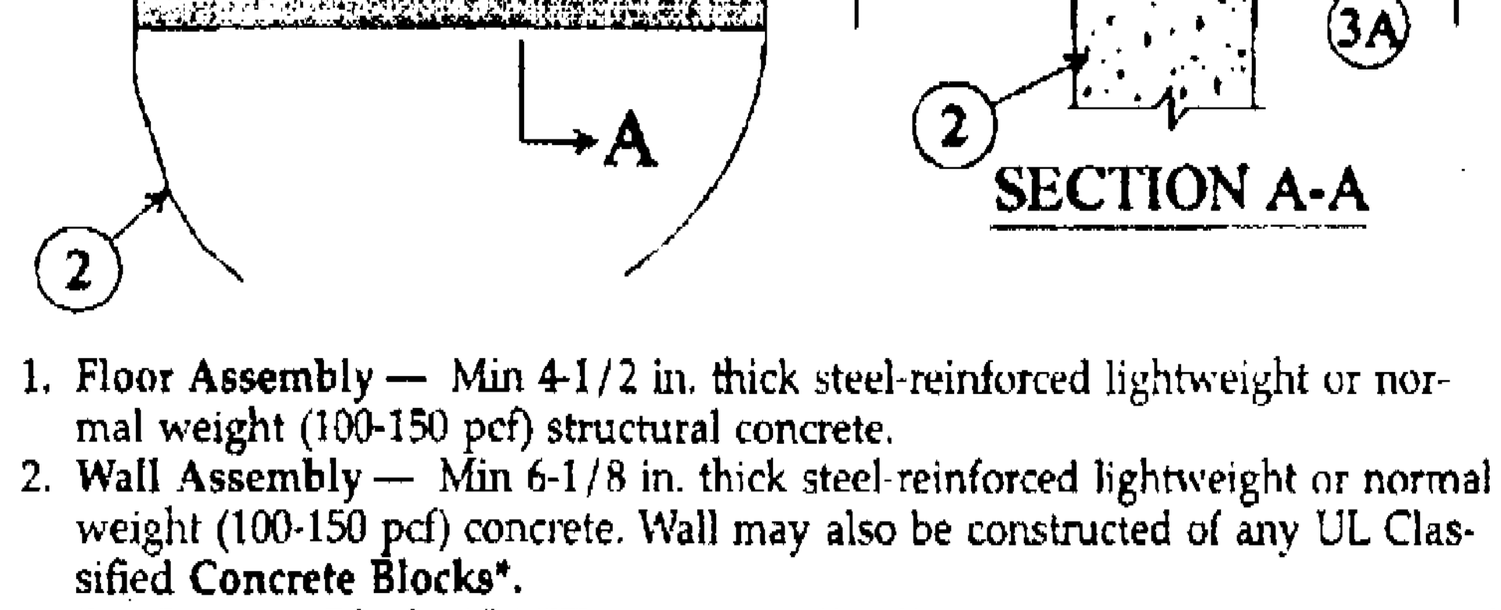

1. **Floor Assembly** — Min 4-1/2 in. thick steel-reinforced lightweight or normal weight (100-150 pcf) structural concrete.
2. **Wall Assembly** — Min 6-1/8 in. thick steel-reinforced lightweight or normal weight (100-150 pcf) concrete. Wall may also be constructed of any UL Classified **Concrete Blocks***.
   See **Concrete Blocks** (CAZT) category in Fire Resistance Directory for names of manufacturers.
3. **Joint System** — **Max separation between bottom of floor and top of wall is 1 in. The joint system is designed to accommodate a max 18.75 percent compression or extension from its installed width.** The joint system consists of a forming material and a fill material, as follows:
   A. **Forming Material*** — Min 6-1/8 in. thickness of min 8.0 pcf density mineral wool batt insulation, cut to a min 1-3/8 in. height, compressed and firmly packed into the gap between the top of wall and bottom of the floor as a permanent form.
      FIBREX INSULATIONS INC —FBX Safing Insulation
      OWENS CORNING HT INC, DIV OF
      OWENS CORNING --Safing Insulation/MW
      ROCK WOOL MANUFACTURING CO —Delta Board
      THERMAFIBER L L C —Type SAF
   B. **Fill, Void or Cavity Material*** — Min 1/16 in. (dry, 1/8 in. wet) thickness of fill material sprayed or brushed on each side of the wall between the top of the wallboard and the bottom of the floor to completely cover mineral wool and overlap a min of 1 in. onto wall and floor on both sides of wall.
      MINNESOTA MINING & MFG CO —Firedam Spray

*Bearing the UL Classification Marking

System No. C-AJ-1013

(Formerly System No. 130)
F Rating — 1 Hr
T Rating — 0 Hr
L Rating At Ambient — Less Than 1 CFM/sq ft (See Item 4)
L Rating At 400 F — Less Than 1 CFM/sq ft (See Item 4)

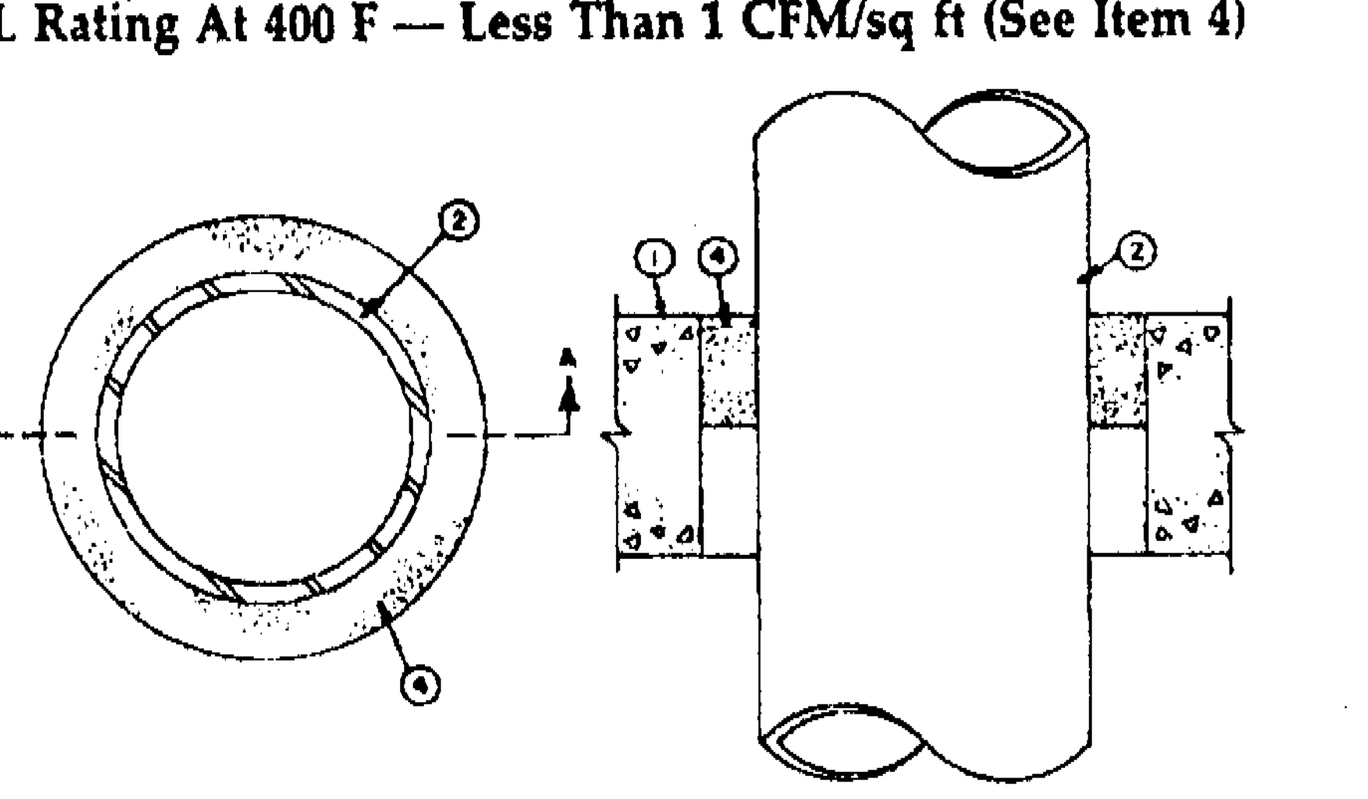

1. **Floor or Wall Assembly** — Min 5 in. thick reinforced normal weight (140-155) pcf) concrete. Wall may also be constructed of any UL Classified Concrete Blocks*. Max diam of opening is 6 in.
   See **Concrete Block** (CAZT) category in the Fire Resistance Directory.
2. **Through Penetrants** — One metallic pipe, or conduit to be centered within the firestop system. Pipe or conduit to be rigidly supported on both sides of floor or wall assembly. The following types and sizes of metallic pipes or conduits may be used:
   A. **Steel Pipe** — Nom 4 in. diam (or smaller) Schedule 5 (or heavier) steel pipe. A nom annular space of 3/4 in. is required within the firestop system.
   B. **Conduit** — Nom 4 in. diam (or smaller) steel electrical metallic tubing or steel conduit. A nom annular space of 3/4 in. is required within the firestop system.
3. **Packing Material** — (Not Shown) — Nom 1 in. diam open cell polyurethane foam backer rod friction-fitted into the opening as a permanent form. Packing material to be recessed from top surface of floor or from both surfaces of wall as required to accommodate the required thickness of fill material.
4. **Fill, Void or Cavity Material* — Sealant** — Min 3/4 in. thickness of fill material applied within annulus, flush with top surface of floor or with both surfaces of wall.
   MINNESOTA MINING & MFG CO —Types FB-2000 or FB-2000+. (Note: L Ratings apply only when FB-2000+ is used.)

*Bearing the UL Classification Marking

System No. C-AJ-2241

F Rating — 1 Hr
T Rating — 1 Hr

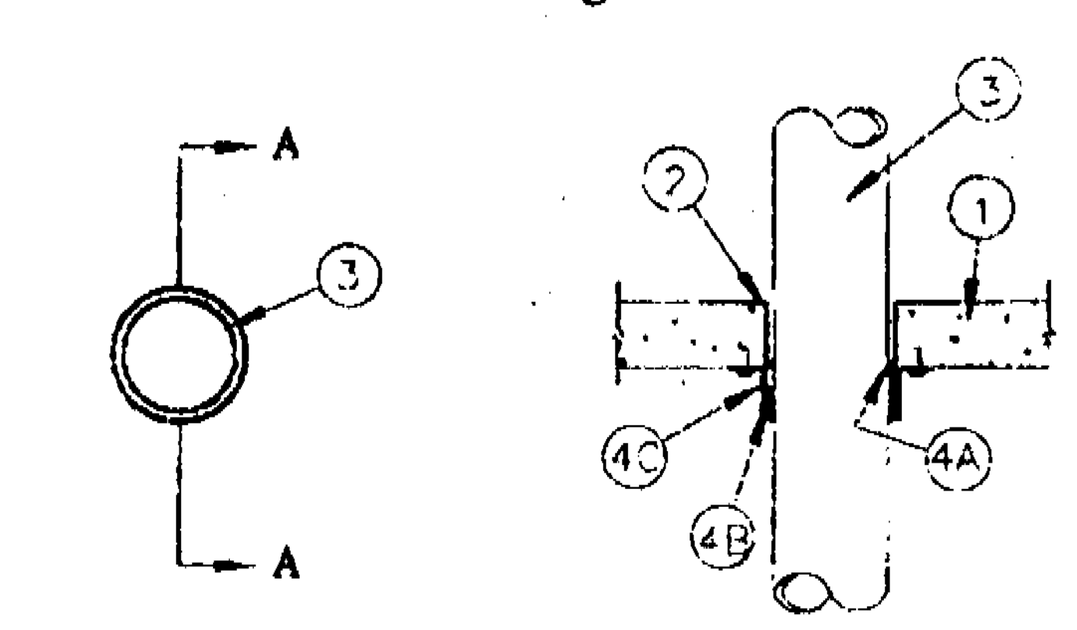

1. **Floor or Wall Assembly** — Min 2-1/2 in. thick reinforced lightweight or normal weight (100-150 pcf) concrete. Wall may also be constructed of any UL Classified **Concrete Blocks***. For nom 2-1/2 in. diam and smaller pipes and conduits, diam of opening shall be 1/2 in. larger than nom pipe diam. For pipes and conduits greater than nom 2-1/2 in. diam of opening shall be 1 in. larger than nom pipe diam.
   See **Concrete Block** (CAZT) category in the Fire Resistance Directory for names of manufacturers.
2. **Steel Sleeve** — (Optional) — Nom 5 in. diam (or smaller) Schedule 10 (or heavier) steel sleeve cast or grouted into floor or wall assembly.
3. **Through Penetrants** — One nonmetallic pipe or conduit to be centered within opening with a nom annular space between pipe or conduit and periphery of opening of 1/8 in. for nom 2-1/2 in. diam and smaller pipes and conduits and 1/4 in. pipes and conduits greater than nom 2-1/2 in. Pipe or conduit to be rigidly supported on both sides of the floor or wall assembly. The following types and sizes of nonmetallic pipes may be used:
   A. **Polyvinyl Chloride (PVC) Pipe** — Nom 4 in. diam (or smaller) Schedule 40 solid core or cellular core PVC pipe for use in closed (process or supply) or vented (drain, waste or vent) piping systems.
   B. **Rigid Nonmetallic Conduit++** — Nom 4 in. diam (or smaller) Schedule 40 PVC conduit installed in accordance with Article 347 of the National Electrical Code (NFPA No. 70).
   C. **Chlorinated Polyvinyl Chloride (CPVC) Pipe** — Nom 4 in. diam (or smaller) SDR17 CPVC pipe for use in closed (process or supply) or vented (drain, waste or vent) piping systems.
   D. **Acrylonitrile Butadiene Styrene (ABS) Pipe** — Nom 4 in. diam (or smaller) Schedule 40 solid core or cellular core ABS pipe for use in closed (process or supply) or vented (drain, waste or vent) piping systems.
   E. **Fire Retardant Polypropylene (FRPP) Pipe** — Nom 4 in. diam (or smaller) Schedule 40 FRPP pipe for use in closed (process or supply) or vented (drain, waste or vent) piping systems.
4. **Firestop System** — The details of the firestop system shall be as follows:
   A. **Fill, Void or Cavity Materials* — Caulk** — Min 1/4 in. thickness of caulk applied within annular space, flush with bottom of floor or both sides of wall.
      MINNESOTA MINING & MFG CO —CP 25WB+ Caulk
   A1. **Fill, Void or Cavity Materials* — Sealant (Optional, Not Shown)** — For floor assemblies, an additional min 1/2 in. thickness of sealant may be applied within the annular space flush with top surface of floor.
      MINNESOTA MINING & MFG CO —FB-1000 NS Sealant
   B. **Fill, Void or Cavity Materials* — Wrap Strip** — Nom 1/8 in. thick intumescent material supplied in 2 in. wide strips. Wrap strip tightly wrapped around nonmetallic pipe with continuous layers and butted tightly against the bottom surface of the floor or both surfaces of the wall. For nom 2 in. diam (and smaller) pipes, one layer is required. For nom 2-1/2 in. and 3 in. diam pipes, two layers are required. For nom 3-1/2 in. and 4 in. diam pipes, three layers are required. Wrap strip layers temporarily held in position using aluminum foil tape, steel wire tie, or equivalent.
      MINNESOTA MINING & MFG CO —Ultra GS
   C. **Steel Collar** — Nom 2 in. deep collar with 1-1/4 in. wide by 2 in. long anchor tabs and min 1/2 in. long tabs to retain wrap strip layers.

      Coils of precut 0.016 in. thick (28 gauge) galv sheet steel available from wrap strip manufacturer. As an alternate, collar may be field-fabricated from min 0.016 in. thick (28 gauge) galv sheet steel in accordance with instruction sheet supplied by wrap strip manufacturer. Steel collar with anchor tabs bent outward 90 degree, wrapped tightly around wrap strip layers with min 1 in. overlap at seam. Anchor tabs to be pressed tightly against floor or wall surface(s), and collar to be compressed around wrap strip layers using a min 1/2 in. wide by 0.028 in. thick stainless steel band clamp at the collar midheight. As an alternate to the band clamp, collar for systems with three or more layers of wrap strip may be fastened together along the overlapping seam with three No. 6 by 3/8 in. long self-tapping steel screws. Collar to be secured to floor or wall surface(s) with 1/4 in. diam by min 1-1/2 in. long steel expansion bolts in conjunction with steel nuts and min 1-1/4 in. diam steel fender washers. Min of two, three or four anchor bolts symmetrically located, for nom 2 in. diam (and smaller), nom 3 in. diam (and smaller) and nom 4 in. diam (and smaller), pipes, respectively.

*Bearing the UL Classification Marking
++Bearing the UL Listing Mark

DRAWN BY:

REVISIONS:

3DESIGN, INC.
ANTHONY LEON
AR0015752
ARCHITECTURE
4500 BISCAYNE BLVD. SUITE#G04 MIAMI, FL 33137 T.305.458.9377 F.305.458.9378

SEAL

NEW BLGD
FOR
1529 JEFFERSON AVE
MIAMI BEACH, FL
33139

OFFICE C...
CITY OF MIA...
APPROVED FOR PER...
THE FOLLOWING
BUILDING: 3/6/07
ZONING: JUN ...
DRB/HPB:
CONCURRENCY:
PLUMBING: 5/25/07
ELECTRICAL:
MECHANICAL:
FIRE PREVENTION:
ENGINEERING:
PUBLIC WORKS:
STRUCTURAL:
ACCESSIBILITY:
ELEVATOR:
As per Florida Building Code Section 104...
REVIEWED ... CODE COMPL...

A-8.0

JUNE 6, 2006

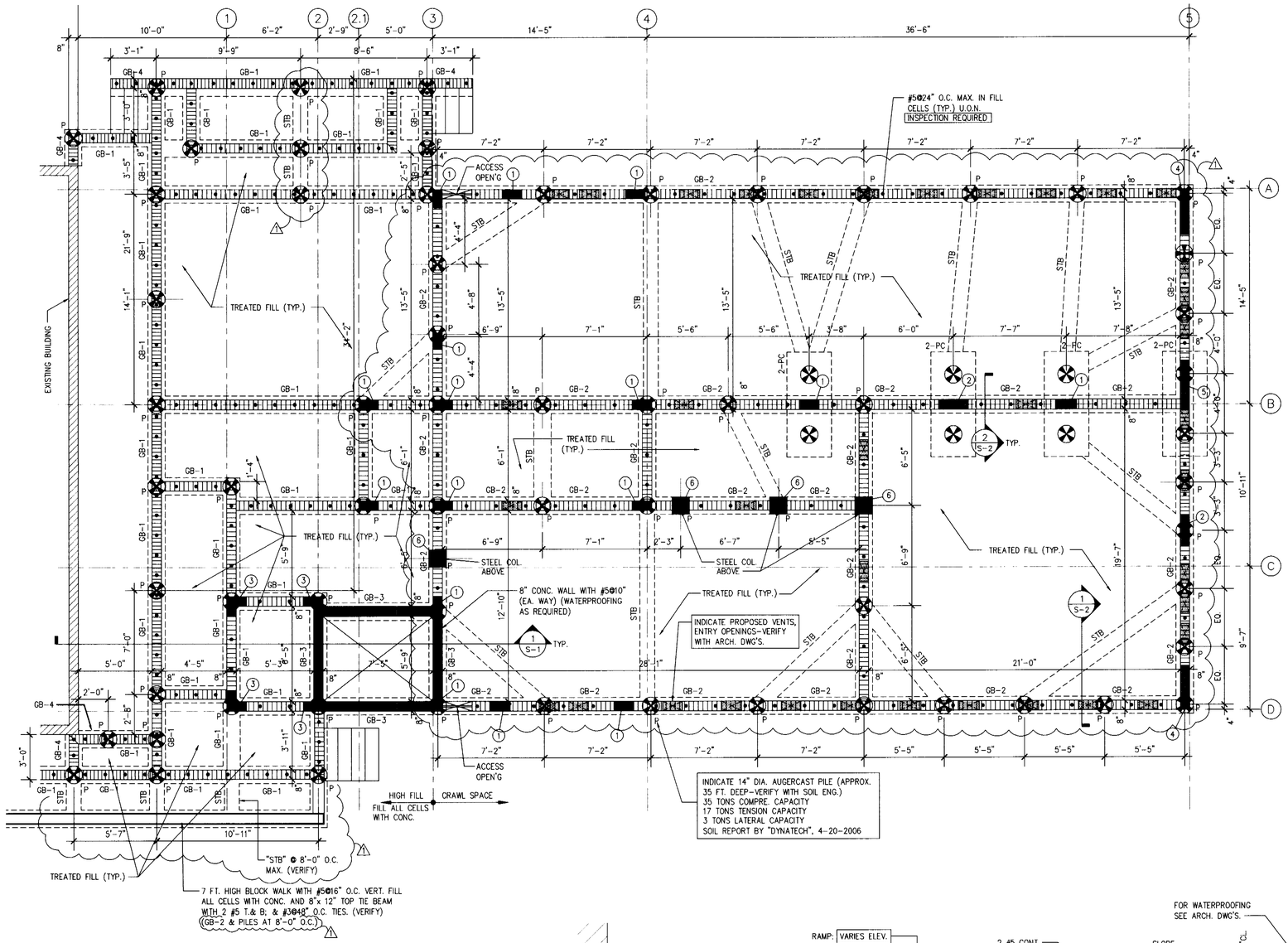

FOUNDATION & CRAWL SPACE WALLS FRAMING PLAN

SCALE: 1/4" = 1'-0"

NOTE:

1- VERIFY DIMENSIONS, ELEVATIONS, STEPS, SLOPES, ETC. WITH ARCHITECTURAL DRAWINGS PRIOR TO ANY WORK.

2- FOR VENTILATION/ENTRY OPENINGS - SEE ARCHITECTURAL DRAWINGS.

3- FILL ALL BLOCK CELLS WITH CONCRETE & PROVIDE WATERPROOFING AT ELEVATED PLANTERS & ELEVATED DECK LOCATIONS.

4- FOR COLUMNS LAYOUT REQUIREMENTS SEE FIRST FLOOR PLAN.

5- TOP OF GRADE BEAMS -MIN. 8" BELOW GRADE (MIN. -3'-1⅜")

NOTE:

TERMITE PROTECTION SHALL BE PROVIDE BY REGISTERED TERMITICIDES AS A PREVENTIVE TREATMENT TO NEW CONSTRUCTION F.B.C. 2004 (SEE SECTION 202, REGISTERED TERMITICIDE). UPON COMPLETION OF THE APPLICATION OF THE TERMITE PROTECTIVE TREATMENT, A CERTIFICATE OF COMPLIANCE SHALL BE ISSUED TO THE BUILDING DEPARTMENT BY THE LICENSED PEST CONTROL COMPANY THAT CONTAINS THE FOLLOWING STATEMENT: "THE BUILDING HAS RECEIVED A COMPLETE TREATMENT FOR THE PREVENTION OF SUBTERRANEAN TERMITES. TREATMENT IS IN ACCORDANCE WITH THE RULES AND LAWS ESTABLISHED BY THE FLORIDA DEPARTMENT OF AGRICULTURE AND CONSUMER SERVICES."

GRADE BEAM SCHEDULE

MARK	SIZE W.	SIZE D.	LONGITUDINAL REINF. TOP	LONGITUDINAL REINF. BOTTOM	STIRRUPS SIZE	STIRRUPS SPACING	REMARKS
GB-1	14"	24"	3 # 6	3 # 6	# 3	10"	
GB-2	14"	30"	3 # 6	3 # 6	# 3	8"	2 # 6@1/2 DEPTH
GB-3	14"	30"	3 # 7	3 # 7	# 3	10"	2 # 7@1/2 DEPTH
GB-4	14"	24"	3 # 6	3 # 6	# 3	8"	2 # 6@1/2 DEPTH/ CANTILEVER
STB	12"	24"	2 # 6	2 # 6	# 3	48"	STRAP BEAM

1- CONTRACTOR TO VERIFY BEAM SIZES & ELEVATIONS WITH ARCHITECTURAL DRAWINGS PRIOR TO ANY WORK. REPORT DISCREPANCIES FOR ACTION. ⚠1

2- TOP OF EXTERIOR GRADE BEAMS MINIMUM 12" BELOW GRADE.

COLUMN SCHEDULE

MARK	TYPE	SIZE	REINFORCEMENT	#3 TIES @	REMARKS
1	CONCRETE	8" x 16"	4 # 6	8"	
2	CONCRETE	8" x 24"	6 # 6	8"- 2 SETS	
3	CONCRETE	8" x 16"x 16"	7 # 6	8"- 2 SETS	
4	CONCRETE	8" x 36"	8 # 6	8"- 2 SETS	
5	CONCRETE	8" x 38"+-	8 # 6	8"- 2 SETS	
6	CONCRETE	14" x 14"	8 # 6	8"	
				⚠1	

1- VERIFY COLUMNS DIMENSION SIZES AND LOCATION WITH ARCHITECTURAL DWG'S. PRIOR TO ANY WORK

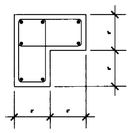

COL. # 3 DETAIL

SCALE: 3/4" = 1'-0"

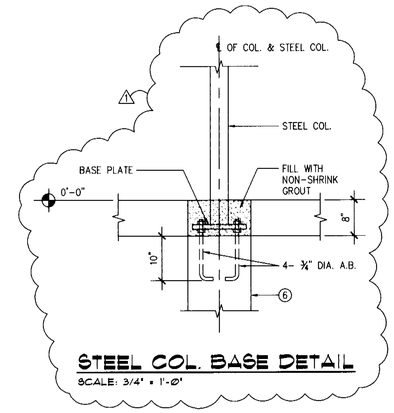

STEEL COL. BASE DETAIL

SCALE: 3/4" = 1'-0"

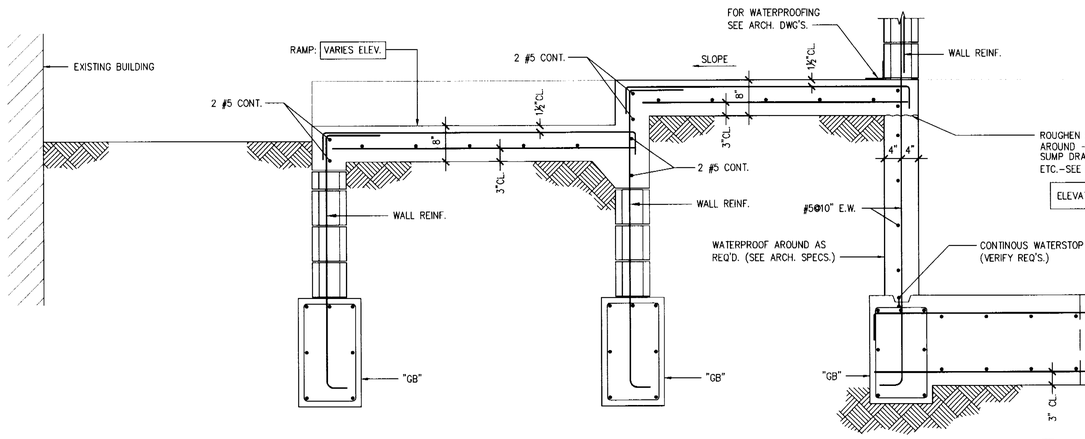

SECTION 1/S-1

SCALE: 3/4" = 1'-0"

DRAWN BY: SL
12-10-06
REVISIONS:
⚠1 2-08-07 BLDG. DEPT. COMMENT

2DESIGN INC.
ANTHONY LEON
AR0005752
ARCHITECTURE
4300 BISCAYNE BLVD. SUITE#204 MIAMI, FL 33137 T.305.438.9377 F.305.438.9378

SEAL

NEW BLDG. FOR 1529 JEFFERSON AVE. MIAMI BEACH, FL 33139

OFFICE COPY
CITY OF MIAMI BEACH
APPROVED FOR PERMIT BY THE FOLLOWING:
BUILDING:
ZONING:
DRB/HPB: JUN 12 2007
CONCURRENCY:
PLUMBING:
ELECTRICAL:
MECHANICAL:
FIRE PREV.
ENGINEER
PUBLIC WKS.
STRUCTURAL
ACCESSIBILITY
ELEVATOR
As per Florida Building Code Section 104.5.3
NOTES:

Sam Lyubkin, P.E.
Consulting Engineer
Forum Building 2632 Hollywood Boulevard
Suite 103 Hollywood, Florida 33020
(954) 922-8845
P.E. #34306

TO THE BEST OF THE ENGINEER'S KNOWLEDGE, THE PLANS AND SPECIFICATIONS BY THE ENGINEER FOR THIS BUILDING COMPLY WITH THE MINIMUM APPLICABLE BUILDING CODE

S-1
OF 8

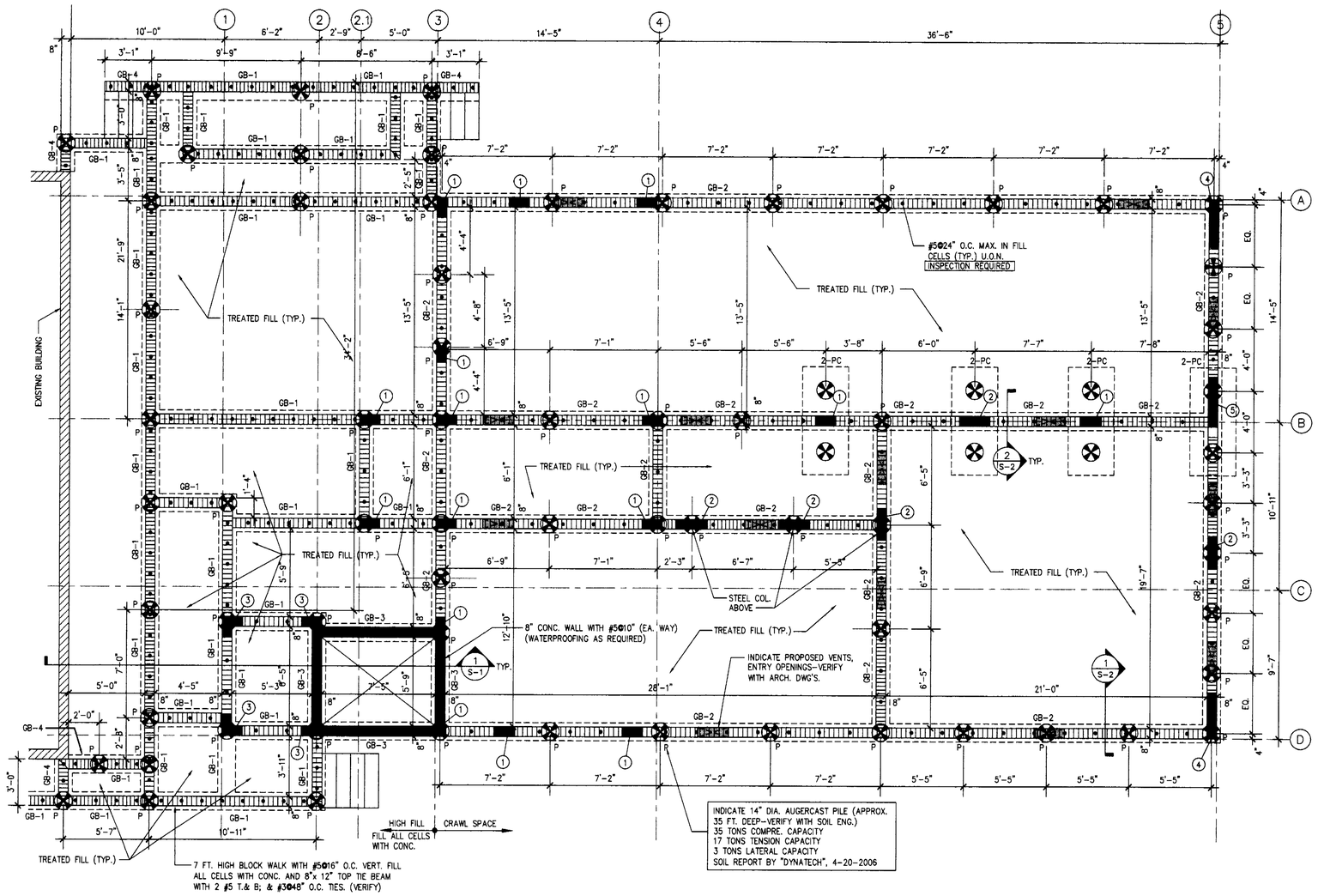

FOUNDATION & CRAWL SPACE WALLS FRAMING PLAN

SCALE: 1/4" = 1'-0"

NOTE:

1– VERIFY DIMENSIONS, ELEVATIONS, STEPS, SLOPES, ETC. WITH ARCHITECTURAL DRAWINGS PRIOR TO ANY WORK.

2– FOR VENTILATION/ENTRY OPENINGS – SEE ARCHITECTURAL DRAWINGS.

3– FILL ALL BLOCK CELLS WITH CONCRETE & PROVIDE WATERPROOFING AT ELEVATED PLANTERS & ELEVATED DECK LOCATIONS.

4– FOR COLUMNS LAYOUT REQUIREMENTS SEE FIRST FLOOR PLAN.

5– TOP OF GRADE BEAMS –MIN. 8" BELOW GRADE.

NOTE:

TERMITE PROTECTION SHALL BE PROVIDE BY REGISTERED TERMITICIDES AS A PREVENTIVE TREATMENT TO NEW CONSTRUCTION F.B.C. 2004 (SEE SECTION 202, REGISTERED TERMITICIDE). UPON COMPLETION OF THE APPLICATION OF THE TERMITE PROTECTIVE TREATMENT, A CERTIFICATE OF COMPLIANCE SHALL BE ISSUED TO THE BUILDING DEPARTMENT BY THE LICENSED PEST CONTROL COMPANY THAT CONTAINS THE FOLLOWING STATEMENT: "THE BUILDING HAS RECEIVED A COMPLETE TREATMENT FOR THE PREVENTION OF SUBTERRANEAN TERMITES. TREATMENT IS IN ACCORDANCE WITH THE RULES AND LAWS ESTABLISHED BY THE FLORIDA DEPARTMENT OF AGRICULTURE AND CONSUMER SERVICES."

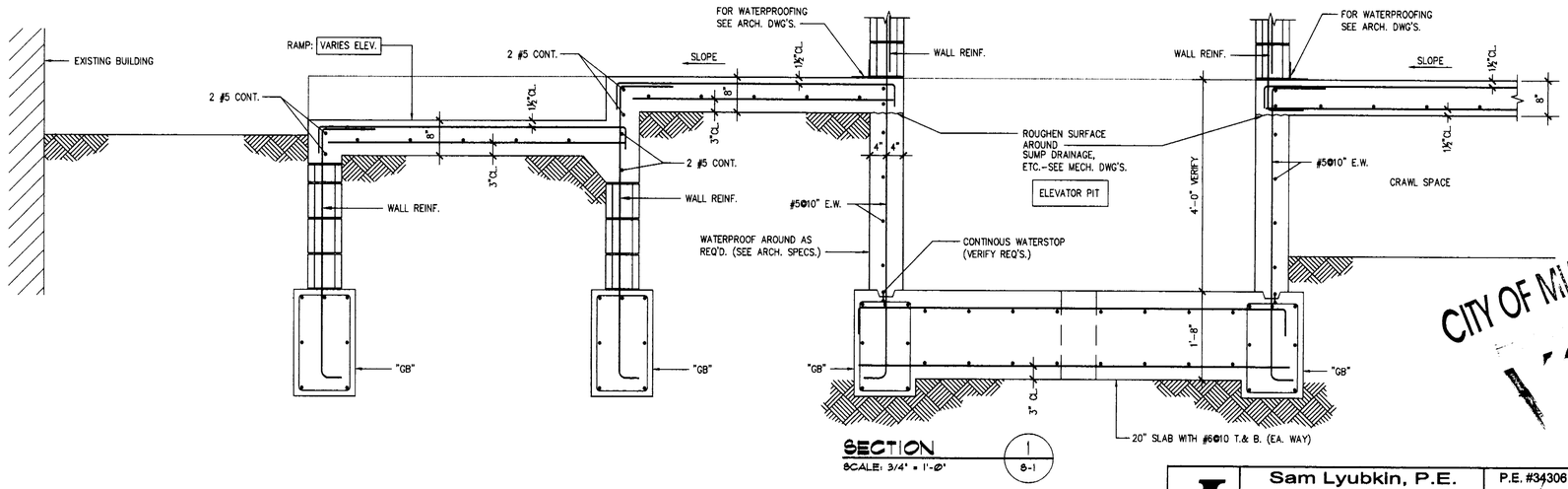

SECTION 1/S-1

SCALE: 3/4" = 1'-0"

GRADE BEAM SCHEDULE

MARK	SIZE		LONGITUDINAL REINF.		STIRRUPS		REMARKS
	W.	D.	TOP	BOTTOM	SIZE	SPACING	
GB-1	14"	24"	3 # 6	3 # 6	# 3	10"	
GB-2	14"	30"	3 # 6	3 # 6	# 3	8"	2 # 6@1/2 DEPTH
GB-3	14"	30"	3 # 7	3 # 7	# 3	10"	2 # 7@1/2 DEPTH
GB-4	14"	24"	3 # 6	3 # 6	# 3	8"	2 # 6@1/2 DEPTH/ CANTILEVER

1– CONTRACTOR TO VERIFY BEAM SIZES & ELEVATIONS WITH ARCHITECTURAL DRAWINGS PRIOR TO ANY WORK. REPORT DISCREPANCIES FOR ACTION.

2– TOP OF EXTERIOR GRADE BEAMS MINIMUM 12" BELOW GRADE.

COLUMN SCHEDULE

MARK	TYPE	SIZE	REINFORCEMENT	#3 TIES @	REMARKS
1	CONCRETE	8" x 16"	4 # 6	8"	
2	CONCRETE	8" x 24"	6 # 6	8"– 2 SETS	
3	CONCRETE	8" x 16"x 16"	7 # 6	8"– 2 SETS	
4	CONCRETE	8" x 36"	8 # 6	8"– 2 SETS	
5	CONCRETE	8" x 38"+–	8 # 6	8"– 2 SETS	

1– VERIFY COLUMNS DIMENSION SIZES AND LOCATION WITH ARCHITECTURAL DWG'S. PRIOR TO ANY WORK

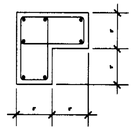

COL. # 3 DETAIL

SCALE: 3/4" = 1'-0"

DRAWN BY:

REVISIONS:

2DESIGN INC
ANTHONY LEON
AR0017052
ARCHITECTURE
4500 BISCAYNE BLVD. SUITE#604 MIAMI, FL 33137 T.305.438.9377 F.305.438.9378

SEAL

NEW BLDG.
FOR
1529 JEFFERSON AVE.
MIAMI BEACH, FL
33139

CITY OF MIAMI BEACH
APPROVED

Sam Lyubkin, P.E.
Consulting Engineer
Forum Building 2632 Hollywood Boulevard
Suite 103 Hollywood, Florida 33020
(954) 922-8845
P.E. #34306

TO THE BEST OF THE ENGINEER'S KNOWLEDGE, THE PLANS AND SPECIFICATIONS BY THE ENGINEER FOR THIS BUILDING COMPLY WITH THE MINIMUM APPLICABLE BUILDING CODES

12-13-2006

S–1
OF 8

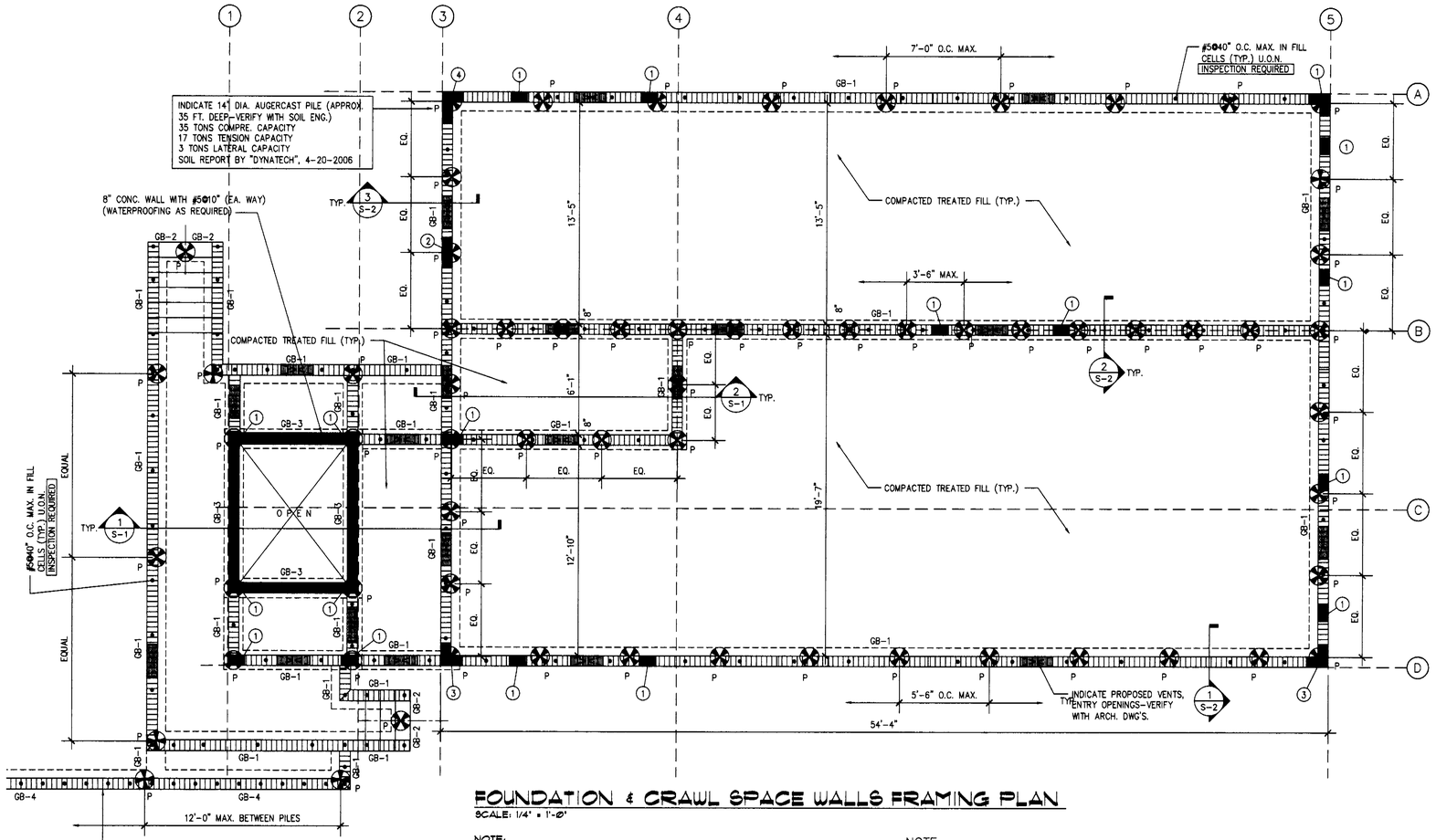

FOUNDATION & CRAWL SPACE WALLS FRAMING PLAN

SCALE: 1/4" = 1'-0"

NOTE:

1- VERIFY DIMENSIONS, ELEVATIONS, STEPS, SLOPES, ETC. WITH ARCHITECTURAL DRAWINGS PRIOR TO ANY WORK.

2- FOR VENTILATION/ENTRY OPENINGS - SEE ARCHITECTURAL DRAWINGS.

3- FILL ALL BLOCK CELLS WITH CONCRETE & PROVIDE WATERPROOFING AT ELEVATED PLANTERS LOCATIONS.

4- FOR COLUMNS LAYOUT REQUIREMENTS SEE FIRST FLOOR WALL OPENINGS.

5- TOP OF GRADE BEAMS -MIN. 8" BELOW GRADE.

NOTE:

TERMITE PROTECTION SHALL BE PROVIDE BY REGISTERED TERMITICIDES AS A PREVENTIVE TREATMENT TO NEW CONSTRUCTION F.B.C. 2004 (SEE SECTION 202, REGISTERED TERMITICIDE). UPON COMPLETION OF THE APPLICATION OF THE TERMITE PROTECTIVE TREATMENT, A CERTIFICATE OF COMPLIANCE SHALL BE ISSUED TO THE BUILDING DEPARTMENT BY THE LICENSED PEST CONTROL COMPANY THAT CONTAINS THE FOLLOWING STATEMENT: "THE BUILDING HAS RECEIVED A COMPLETE TREATMENT FOR THE PREVENTION OF SUBTERRANEAN TERMITES. TREATMENT IS IN ACCORDANCE WITH THE RULES AND LAWS ESTABLISHED BY THE FLORIDA DEPARTMENT OF AGRICULTURE AND CONSUMER SERVICES."

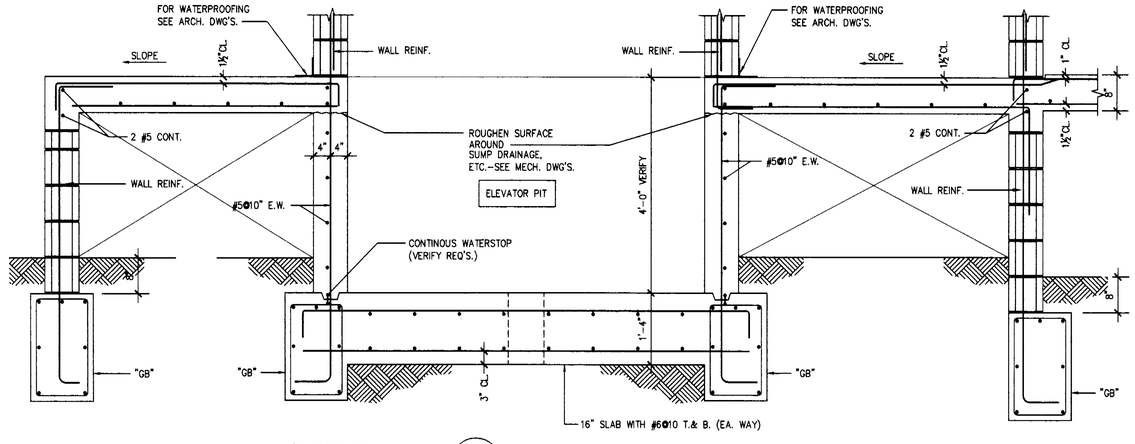

SECTION 1 / S-1

SCALE: 3/4" = 1'-0"

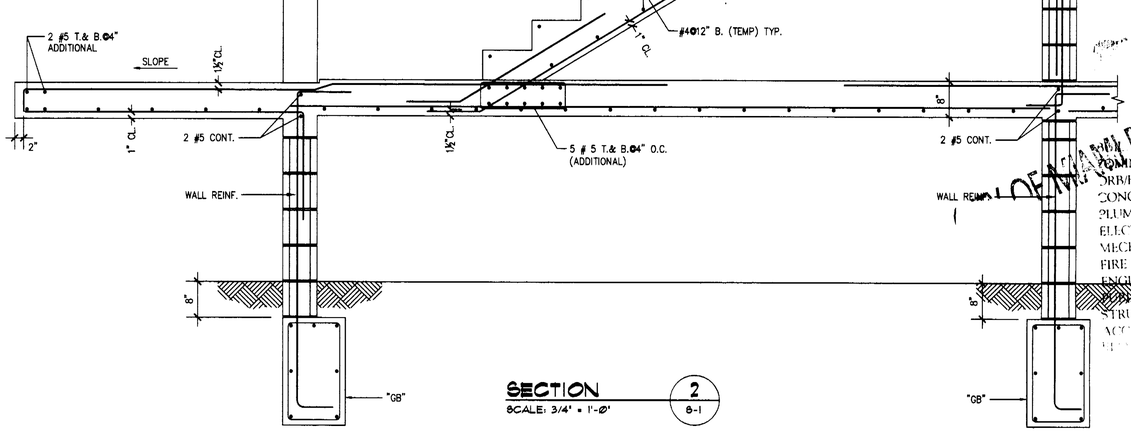

SECTION 2 / S-1

SCALE: 3/4" = 1'-0"

GRADE BEAM SCHEDULE

MARK	SIZE W.	SIZE D.	LONGITUDINAL REINF. TOP	LONGITUDINAL REINF. BOTTOM	STIRRUPS SIZE	STIRRUPS SPACING	REMARKS
GB-1	14"	24"	3 # 6	3 # 6	# 3	10"	
GB-2	14"	24"	3 # 6	3 # 6	# 3	8"	CANTILEVER
GB-3	14"	30"	3 # 7	3 # 7	# 3	10"	2 # 7@1/2 DEPTH
GB-4	14"	24"	3 # 6	3 # 6	# 3	8"	2 # 6@1/2 DEPTH

1- CONTRACTOR TO VERIFY BEAM SIZES & ELEVATIONS WITH ARCHITECTURAL DRAWINGS PRIOR TO ANY WORK. REPORT DISCREPANCIES FOR ACTION.

2- TOP OF EXTERIOR GRADE BEAMS MINIMUM 12" BELOW GRADE.

COLUMN SCHEDULE

MARK	TYPE	SIZE	REINFORCEMENT	#3 TIES @	REMARKS
1	CONCRETE	8" x 16"	4 # 6	8"	
2	CONCRETE	8" x 22"	6 # 6	8"- 2 SETS	
3	CONCRETE	8" x 16"x 16"	7 # 6	8"- 2 SETS	
4	CONCRETE	8" x 16"x 23"	9 # 6	8"- 2 SETS	

1- VERIFY COLUMNS DIMENSION SIZES AND LOCATION WITH ARCHITECTURAL DWG'S. PRIOR TO ANY WORK

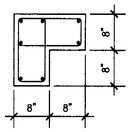

COL. # 3 DETAIL

SCALE: 3/4" = 1'-0"

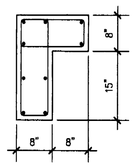

COL. # 4 DETAIL

SCALE: 3/4" = 1'-0"

DRAWN BY:

REVISIONS:

SEAL

3DESIGN, INC.
ANTHONY LEON
AR0006752
ARCHITECTURE
4300 BISCAYNE BLVD. SUITE#GD4 MIAMI, FL 33137 T.305.438.9377 F.305.438.9378

NEW BLDG. FOR 1529 JEFFERSON AVE. MIAMI BEACH, FL 33139

Sam Lyubkin, P.E.
Consulting Engineer
Forum Building 2632 Hollywood Boulevard
Suite 103 Hollywood, Florida 33020
(954) 922-8845
P.E. #34308
TO THE BEST OF THE ENGINEER'S KNOWLEDGE, THE PLANS AND SPECIFICATIONS BY THIS ENGINEER FOR THIS BUILDING COMPLY WITH THE MINIMUM APPLICABLE BUILDING CODES

S-1

OF 8

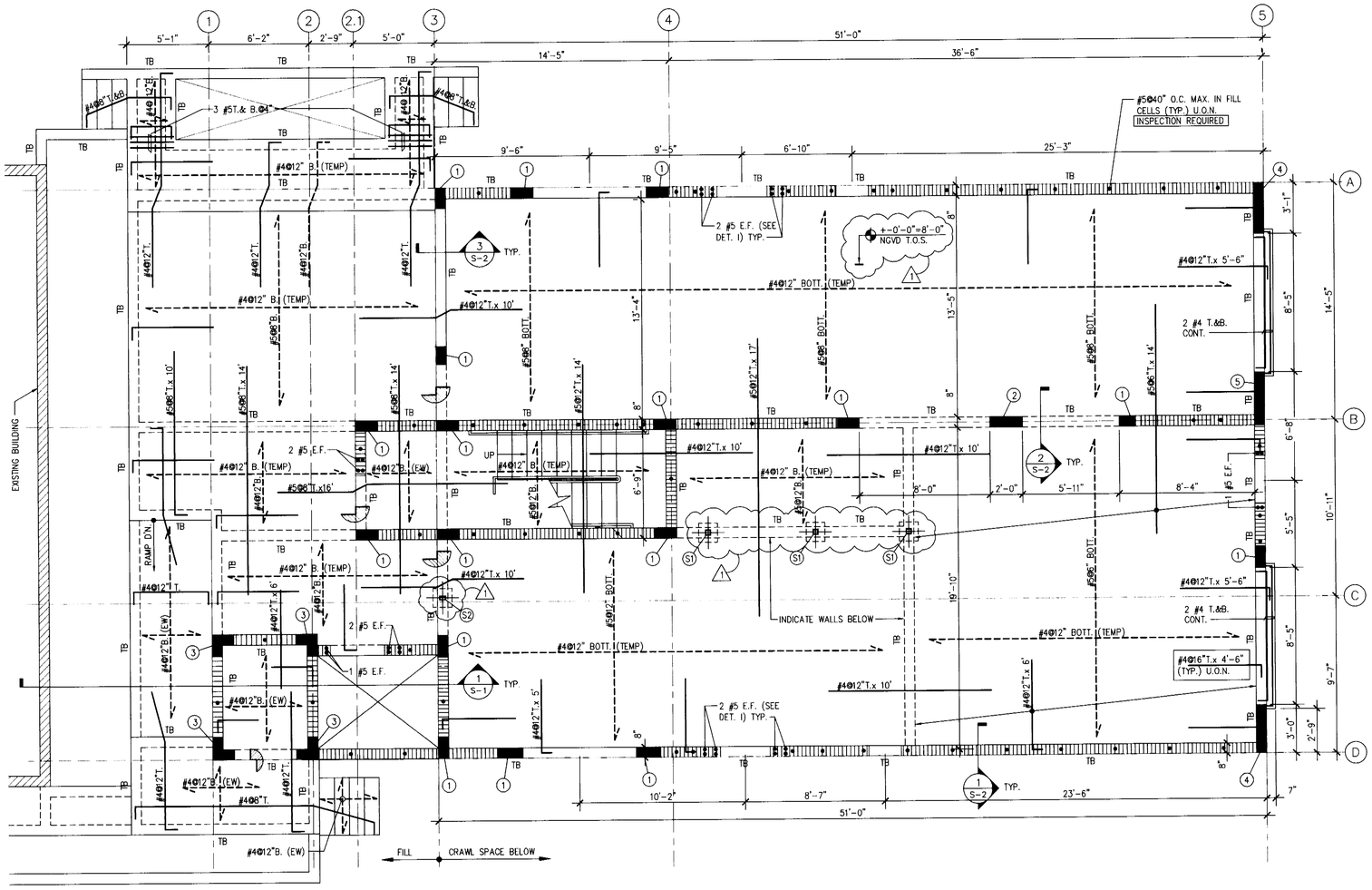

FIRST FLOOR FRAMING PLAN

SCALE: 1/4" = 1'-0"

NOTE:

1- VERIFY DIMENSIONS, ELEVATIONS, STEPS, SLOPES, ETC. WITH ARCHITECTURAL DRAWINGS PRIOR TO ANY WORK.

2- SLAB WITH CRAWL SPACE BELOW TO BE 8" THICK WITH 1" TOP COVER & 2" BOTT. CONC. COVER.
DECK SLAB TO BE 8" THICK WITH 1 ½" TOP CONC. COVER & 3" BOTT. CONC. COVER ON 6 MILL MEMBRANE ON COMPACTED TREATED FILL.

3- WALL REINFORCEMENT - INSPECTION REQUIRED

4- EXTERIOR WALLS TO HAVE ¾" RECESS.

5- DESIGN LOADS: LL= 40 P.S.F. (100 P.S.F. HALLWAYS & DECKS)
ADDITIONAL DL= 35 P.S.F. (85 P.S.F. HALLWAYS & DECKS)

MASONRY WALLS:

1- HORIZONTAL REINFORCING:
PROVIDE STANDARD, TRUSS TYPE GA#9 HORIZONTAL JOINT REINFORCING EVERY 2nd BLOCK COURSE (1'-4" O.C. VERTICALLY) LAPPED 6", PROVIDE SPECIAL HORIZONTAL REINFORCING AT "T" AND "L" INTERSECTION. ANCHOR TO COLUMNS WITH MINIMUM 8" EXTENSION INTO AREA OF POUR.

2- CELL FILLING CONCRETE SHALL BE "PEA ROCK" CONCRETE MIX OR GROUT WITH f'c=5,000 PSI MIN. AT 28 DAYS. (9" SLUMP)

3- PROVIDE CORNER BAR AT ALL BEAM INTERSECTIONS AND CORNERS, CORNERS BARS SHALL BE SAME SIZE AND QUANTITY AS SCHEDULED BEAM REINFORCING EXTENDING 18" IN BOTH DIRECTIONS.

4- INSPECTION REQUIRED.

5- HOLLOW LOAD BEARING MASONRY UNITS SHALL CONFORM TO ASTM C-90, TYPE 1, GRADE N, SQUARE END, WITH A MINIMUM AVERAGE COMPRESSIVE STRENGTH ON NET AREA OF f'm=1500 PSI.

6- MORTAR SHALL CONFORM TO ASTM C-270, TYPE "M" WITH A 28 DAY STRENGTH OF 2,500 PSI.

7- LAY ALL MASONRY WITH FULL FACE HEAD JOINTS AND WITH FACE SHELL MORTAR BEDDING.

8- MASONRY ANCHORAGE TO SUPERSTRUCTURE SHALL BE PROVIDED IN ACCORDANCE WITH STRUCTURAL DRAWINGS AND DETAILS.

9- THE USE OF ADMIXTURES SHALL NOT BE PERMITTED WITHOUT PRIOR REVIEW OF THE ENGINEER.

COLUMN SCHEDULE

MARK	TYPE	SIZE	REINFORCEMENT	#3 TIES @	REMARKS
1	CONCRETE	8" x 16"	4 # 6	8"	
2	CONCRETE	8" x 24"	6 # 6	8"- 2 SETS	
3	CONCRETE	8" x 16"x 16"	7 # 6	8"- 2 SETS	
4	CONCRETE	8" x 36"	8 # 6	8"- 2 SETS	
5	CONCRETE	8" x 38"+-	8 # 6	8"- 2 SETS	
			1		
S1	STEEL	4"x 4"x 3/8"	12"x 12"x 1" BASE PL.	12"x 12"x 1" CAP PL.	
S2	STEEL	4"x 4"x 3/8"	12"x 12"x 1" BASE PL.	8"x 12"x 1" CAP PL.	

1- VERIFY COLUMNS DIMENSION SIZES AND LOCATION WITH ARCHITECTURAL DWG'S. PRIOR TO ANY WORK

2- STEEL COLUMNS TO BE STRUCTURAL TUBE, Fy=46KSI (CONCRETE FILLED)

3- BASE & CAP PLATES TO HAVE 4-3/4" DIA. ANCHOR BOLTS

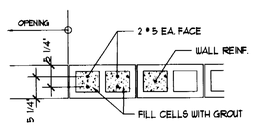

TYP. MASONRY DETAIL "A"
N.T.S.

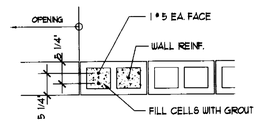

TYP. MASONRY DETAIL "B"
N.T.S.

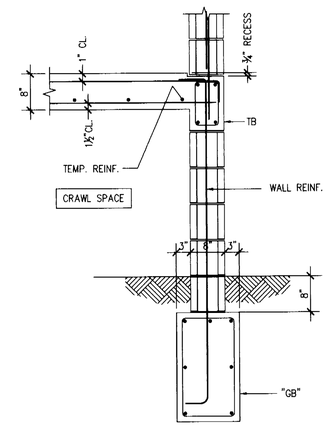

SECTION 1/S-2
SCALE: 3/4" = 1'-0"

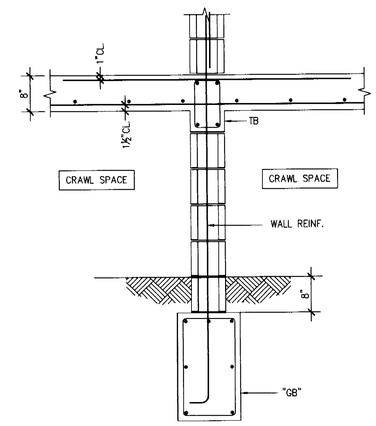

SECTION 2/S-2
SCALE: 3/4" = 1'-0"

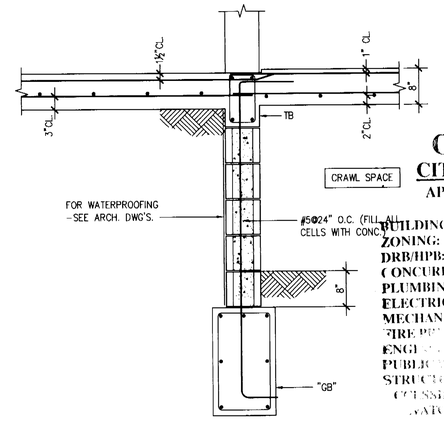

SECTION 3/S-2
SCALE: 3/4" = 1'-0"

DRAWN BY: SL
12-10-06
REVISIONS:
1 2-08-07 BLDG. DEPT. COMMENT

3DESIGN INC
ANTHONY LEON
AR0016752
ARCHITECTURE
4300 BISCAYNE BLVD. SUITE#604 MIAMI, FL 33137 T.305.438.9377 F.305.438.9378

SEAL

NEW BLDG. FOR 1529 JEFFERSON AVE. MIAMI BEACH, FL 33139

OFFICE COPY
CITY OF MIAMI BEACH
APPROVED FOR PERMIT BY THE FOLLOWING:
BUILDING:
ZONING:
DRB/HPB:
CONCURRENCY:
PLUMBING:
ELECTRICAL:
MECHANICAL:
FIRE PR...
ENGI...
PUBLI...
STRUC...
CO...
WATER:
JUN 12 200...
...per Florida P... ...ng Code Section 104.5
SOIL RESIVE... ...ONE COMPLETE...

Sam Lyubkin, P.E.
Consulting Engineer
Forum Building 2632 Hollywood Boulevard
Suite 103 Hollywood, Florida 33020
(954) 922-8845
P.E. #34306

TO THE BEST OF THE ENGINEERS KNOWLEDGE, THE PLANS AND SPECIFICATIONS BY THE ENGINEER FOR THIS BUILDING COMPLY WITH THE MINIMUM APPLICABLE BUILDING CODES.

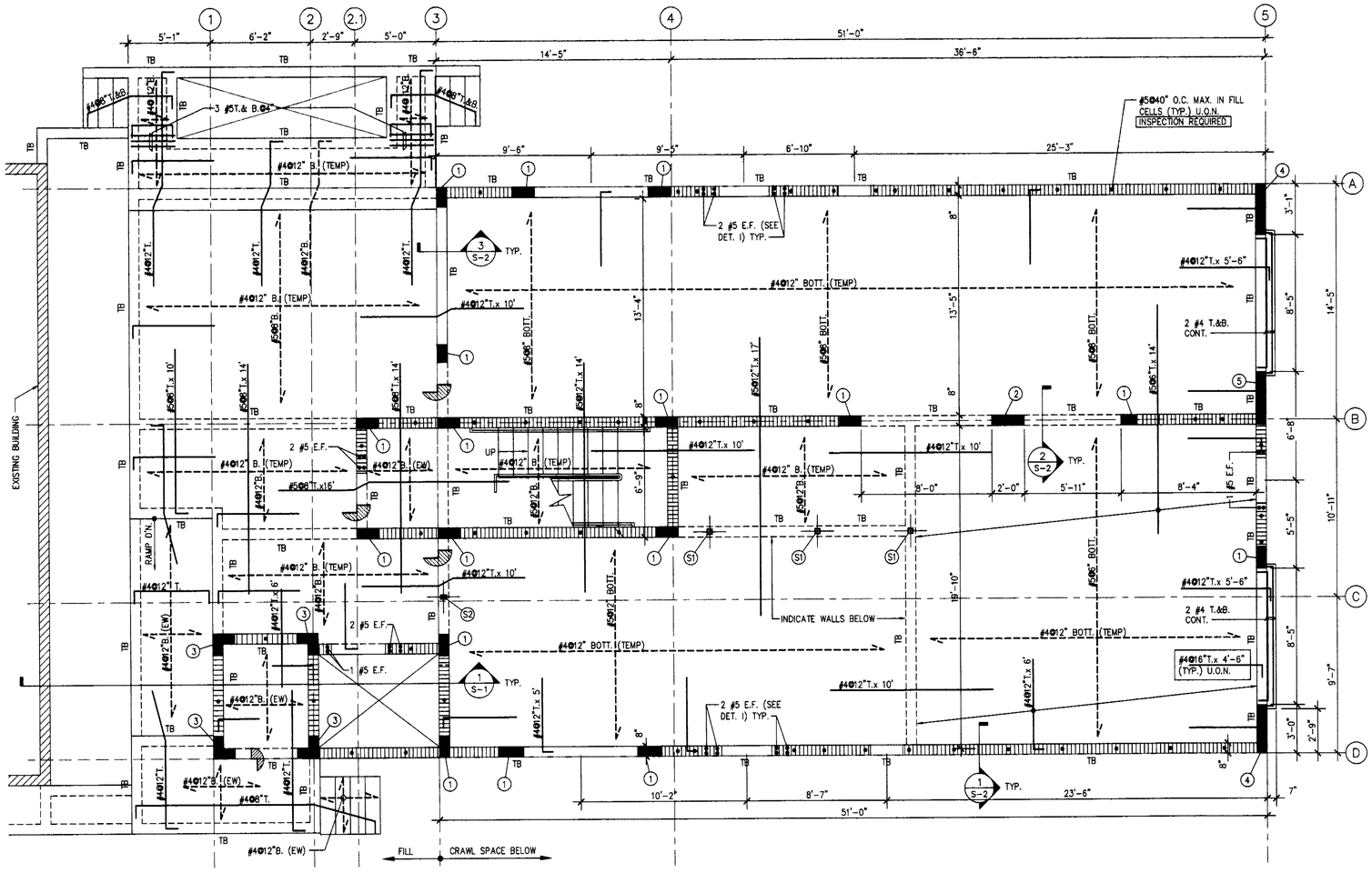

FIRST FLOOR FRAMING PLAN

SCALE: 1/4" = 1'-0"

NOTE:

1- VERIFY DIMENSIONS, ELEVATIONS, STEPS, SLOPES, ETC. WITH ARCHITECTURAL DRAWINGS PRIOR TO ANY WORK.

2- SLAB WITH CRAWL SPACE BELOW TO BE 8" THICK WITH 1" TOP COVER & 2" BOTT. CONC. COVER.
DECK SLAB TO BE 8" THICK WITH 1 ½" TOP CONC. COVER & 3" BOTT. CONC. COVER ON 6 MILL MEMBRANE ON COMPACTED TREATED FILL.

3- WALL REINFORCEMENT - INSPECTION REQUIRED

4- EXTERIOR WALLS TO HAVE ¾" RECESS.

5- DESIGN LOADS: LL= 40 P.S.F. (100 P.S.F. HALLWAYS & DECKS)
ADDITIONAL DL= 35 P.S.F. (85 P.S.F. HALLWAYS & DECKS)

MASONRY WALLS:

1- HORIZONTAL REINFORCING:
PROVIDE STANDARD, TRUSS TYPE GA#9 HORIZONTAL JOINT REINFORCING EVERY 2nd BLOCK COURSE (1'-4" O.C. VERTICALLY) LAPPED 6", PROVIDE SPECIAL HORIZONTAL REINFORCING AT "T" AND "L" INTERSECTION. ANCHOR TO COLUMNS WITH MINIMUM 8" EXTENSION INTO AREA OF POUR.

2- CELL FILLING CONCRETE SHALL BE "PEA ROCK" CONCRETE MIX OR GROUT WITH f'c=5,000 PSI MIN. AT 28 DAYS. (9" SLUMP)

3- PROVIDE CORNER BAR AT ALL BEAM INTERSECTIONS AND CORNERS, CORNERS BARS SHALL BE SAME SIZE AND QUANTITY AS SCHEDULED BEAM REINFORCING EXTENDING 18" IN BOTH DIRECTIONS.

4- INSPECTION REQUIRED.

5- HOLLOW LOAD BEARING MASONRY UNITS SHALL CONFORM TO ASTM C-90, TYPE 1, GRADE N, SQUARE END, WITH A MINIMUM AVERAGE COMPRESSIVE STRENGTH ON NET AREA OF f'm=1500 PSI.

6- MORTAR SHALL CONFORM TO ASTM C-270, TYPE "M" WITH A 28 DAY STRENGTH OF 2,500 PSI.

7- LAY ALL MASONRY WITH FULL FACE HEAD JOINTS AND WITH FACE SHELL MORTAR BEDDING.

8- MASONRY ANCHORAGE TO SUPERSTRUCTURE SHALL BE PROVIDED IN ACCORDANCE WITH STRUCTURAL DRAWINGS AND DETAILS.

9- THE USE OF ADMIXTURES SHALL NOT BE PERMITTED WITHOUT PRIOR REVIEW OF THE ENGINEER.

COLUMN SCHEDULE

MARK	TYPE	SIZE	REINFORCEMENT	#3 TIES @	REMARKS
1	CONCRETE	8" x 16"	4 # 6	8"	
2	CONCRETE	8" x 24"	6 # 6	8"- 2 SETS	
3	CONCRETE	8" x 16"x 16"	7 # 6	8"- 2 SETS	
4	CONCRETE	8" x 36"	8 # 6	8"- 2 SETS	
5	CONCRETE	8" x 38"+-	8 # 6	8"- 2 SETS	
S1	STEEL	4"x 4"x 3/8"	8"x 12"x 1" BASE PL.	12"x 12"x 1" CAP PL.	
S2	STEEL	4"x 4"x 3/8"	8"x 12"x 1" BASE PL.	8"x 12"x 1" CAP PL.	

1- VERIFY COLUMNS DIMENSION SIZES AND LOCATION WITH ARCHITECTURAL DWG'S. PRIOR TO ANY WORK

2- STEEL COLUMNS TO BE STRUCTURAL TUBE, Fy=46KSI (CONCRETE FILLED)

3- BASE & CAP PLATES TO HAVE 4-3/4" DIA. ANCHOR BOLTS

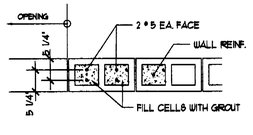

TYP. MASONRY DETAIL "A"
N.T.S.

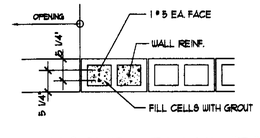

TYP. MASONRY DETAIL "B"
N.T.S.

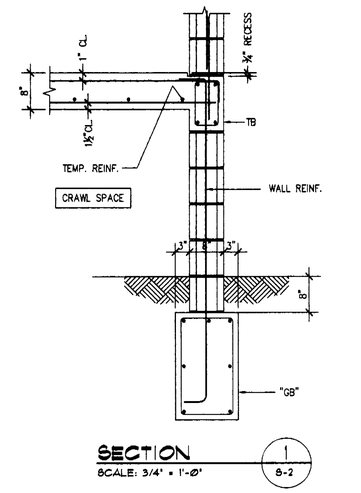

SECTION 1/S-2
SCALE: 3/4" = 1'-0"

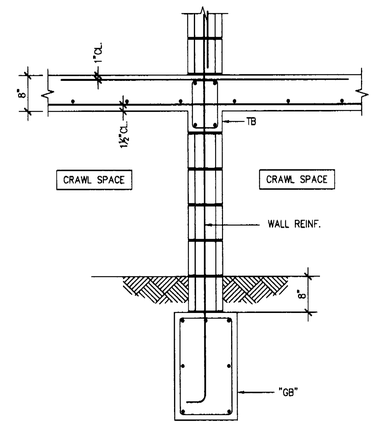

SECTION 2/S-2
SCALE: 3/4" = 1'-0"

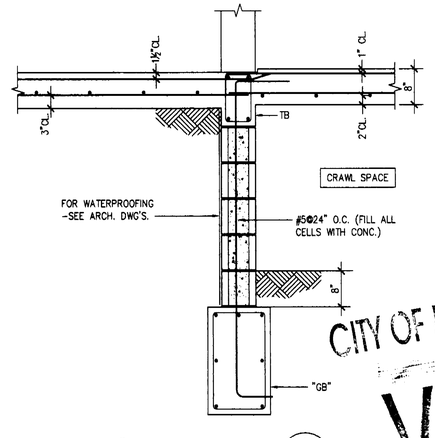

SECTION 3/S-2
SCALE: 3/4" = 1'-0"

CITY OF MIAMI BEACH
VOID

Sam Lyubkin, P.E.
Consulting Engineer
Forum Building 2632 Hollywood Boulevard
Suite 103 Hollywood, Florida 33020
(954) 922-8845
P.E. #34306

TO THE BEST OF THE ENGINEER'S KNOWLEDGE, THE PLANS AND SPECIFICATIONS BY THE ENGINEER FOR THIS BUILDING COMPLY WITH THE MINIMUM APPLICABLE BUILDING CODES.

12-13-06
Seal

DRAWN BY:

REVISIONS:

SEAL

2D DESIGN INC
ANTHONY LEON
AR0006752
ARCHITECTURE
4300 BISCAYNE BLVD. SUITE 604 MIAMI, FL 33137 T.305.438.9377 F.305.438.9378

NEW BLDG. FOR
1529 JEFFERSON AVE.
MIAMI BEACH, FL
33139

S-2
OF 8

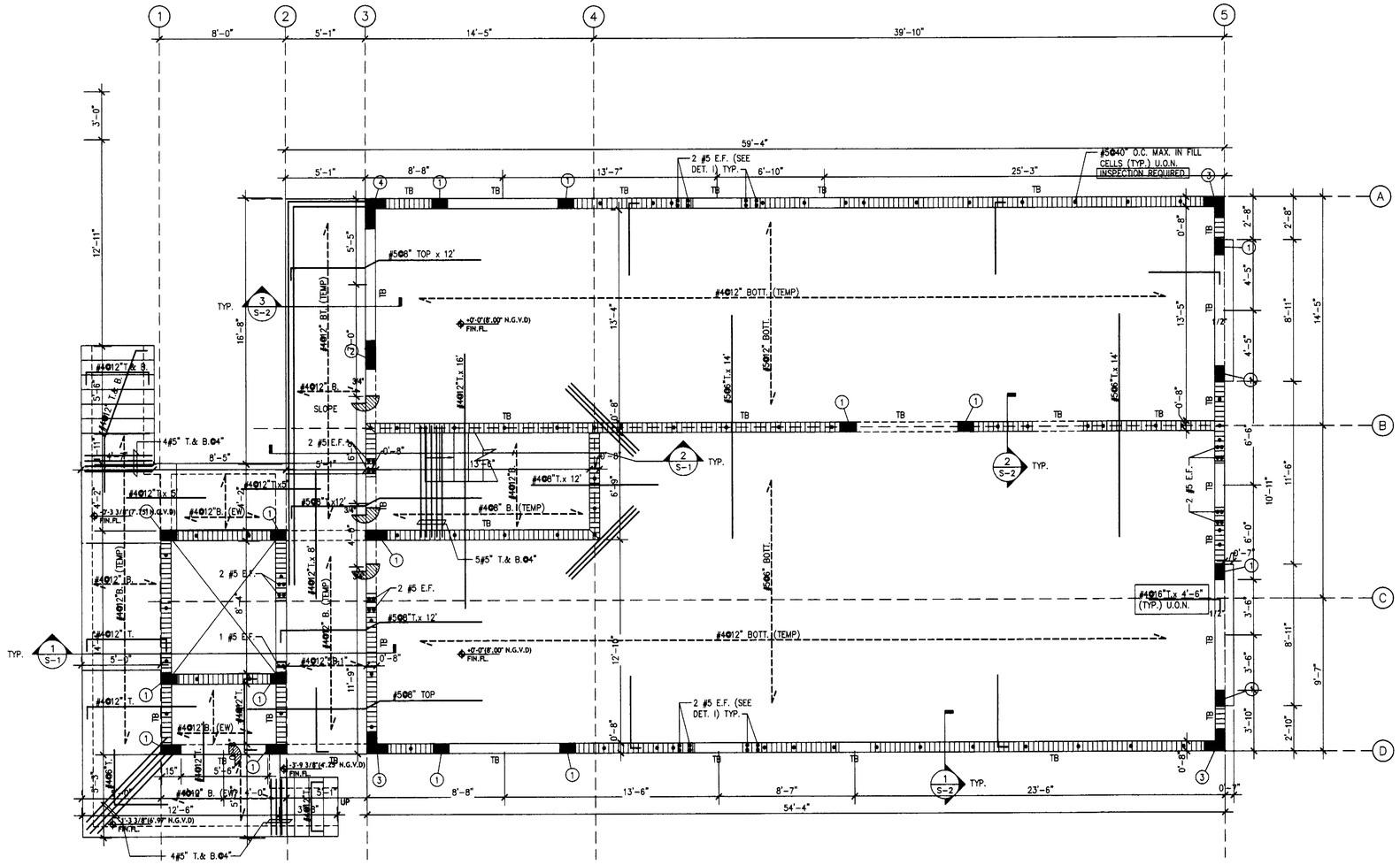

FIRST FLOOR FRAMING PLAN

SCALE: 1/4" = 1'-0"

NOTE:

1- VERIFY DIMENSIONS, ELEVATIONS, STEPS, SLOPES, ETC. WITH ARCHITECTURAL DRAWINGS PRIOR TO ANY WORK.

2- SLAB TO BE 8" THICK (f'c=5 KSI) U.O. NOTED
(1" TOP CONC. COVER SLAB SURFACE,
1 ½" TOP CONC. COVER FOR EXTERIOR SLAB SURFACE AND BOTTOM CONC. COVER)

3- WALL REINFORCEMENT - INSPECTION REQUIRED

4- EXTERIOR WALLS TO HAVE ¾" RECESS.

5- DESIGN LOADS: LL= 40 P.S.F. (100 P.S.F. HALLWAYS)
ADDITIONAL DL= 35 P.S.F.

MASONRY WALLS:

1- HORIZONTAL REINFORCING:
PROVIDE STANDARD, TRUSS TYPE GA#9 HORIZONTAL JOINT REINFORCING EVERY 2nd BLOCK COURSE (1'-4" O.C. VERTICALLY) LAPPED 6", PROVIDE SPECIAL HORIZONTAL REINFORCING AT "T" AND "L" INTERSECTION. ANCHOR TO COLUMNS WITH MINIMUM 8" EXTENSION INTO AREA OF POUR.

2- CELL FILLING CONCRETE SHALL BE "PEA ROCK" CONCRETE MIX OR GROUT WITH f'c=5,000 PSI MIN. AT 28 DAYS. (9" SLUMP)

3- PROVIDE CORNER BAR AT ALL BEAM INTERSECTIONS AND CORNERS, CORNERS BARS SHALL BE SAME SIZE AND QUANTITY AS SCHEDULED BEAM REINFORCING EXTENDING 18" IN BOTH DIRECTIONS.

4- INSPECTION REQUIRED.

5- HOLLOW LOAD BEARING MASONRY UNITS SHALL CONFORM TO ASTM C-90, TYPE 1, GRADE N, SQUARE END, WITH A MINIMUM AVERAGE COMPRESSIVE STRENGTH ON NET AREA OF f'm=1500 PSI.

6- MORTAR SHALL CONFORM TO ASTM C-270, TYPE "M" WITH A 28 DAY STRENGTH OF 2,500 PSI.

7- LAY ALL MASONRY WITH FULL FACE HEAD JOINTS AND WITH FACE SHELL MORTAR BEDDING.

8- MASONRY ANCHORAGE TO SUPERSTRUCTURE SHALL BE PROVIDED IN ACCORDANCE WITH STRUCTURAL DRAWINGS AND DETAILS.

9- THE USE OF ADMIXTURES SHALL NOT BE PERMITTED WITHOUT PRIOR REVIEW OF THE ENGINEER.

COLUMN SCHEDULE

MARK	TYPE	SIZE	REINFORCEMENT	#3 TIES @	REMARKS
1	CONCRETE	8" x 16"	4 # 6	8"	
2	CONCRETE	8" x 22"	6 # 6	8"- 2 SETS	
3	CONCRETE	8" x 16"x 16"	7 # 6	8"- 2 SETS	
4	CONCRETE	8" x 16"x 23"	9 # 6	8"- 2 SETS	

1- VERIFY COLUMNS DIMENSION SIZES AND LOCATION WITH ARCHITECTURAL DWG'S. PRIOR TO ANY WORK

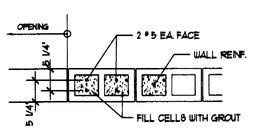

TYP. MASONRY DETAIL "A"
N.T.S.

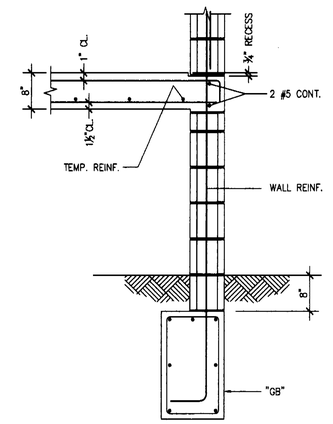

SECTION 1/S-2
SCALE: 3/4" = 1'-0"

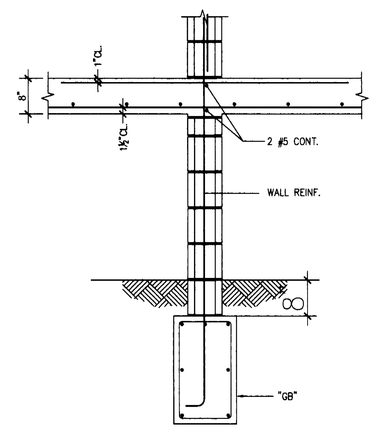

SECTION 2/S-2
SCALE: 3/4" = 1'-0"

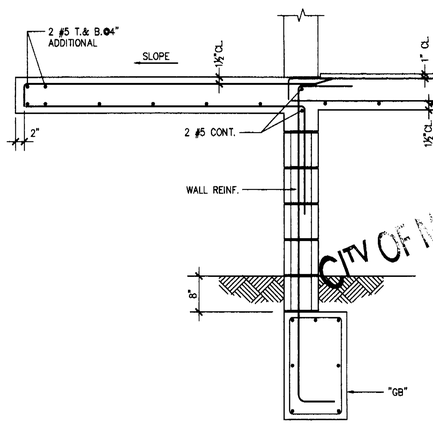

SECTION 3/S-2
SCALE: 3/4" = 1'-0"

CITY OF MIAMI BEACH
APPROVED FOR PERMIT BY THE FOLLOWING:
BUILDING
ORB/HPB
CONCURRENCY
PLUMBING
ELECTRICAL
MECHANICAL
FIRE PREVENT.
ENGINEERING
PUBLIC WORKS
STF
VC

DRAWN BY:

REVISIONS:

SEAL

3D DESIGN INC.
ANTHONY LEON
AR0006752
ARCHITECTURE
4300 BISCAYNE BLVD. SUITE#604 MIAMI, FL 33137 T.305.438.9377 F.305.438.9378

NEW BLDG. FOR
1529 JEFFERSON AVE.
MIAMI BEACH, FL
33139

Sam Lyubkin, P.E.
Consulting Engineer
Forum Building 2632 Hollywood Boulevard
Suite 103 Hollywood, Florida 33020
(954) 922-8845
P.E. #34306

TO THE BEST OF THE ENGINEER'S KNOWLEDGE, THE PLANS AND SPECIFICATIONS BY THE ENGINEER FOR THIS BUILDING COMPLY WITH THE MINIMUM APPLICABLE BUILDING CODES

6-20-06

S-2
OF 8

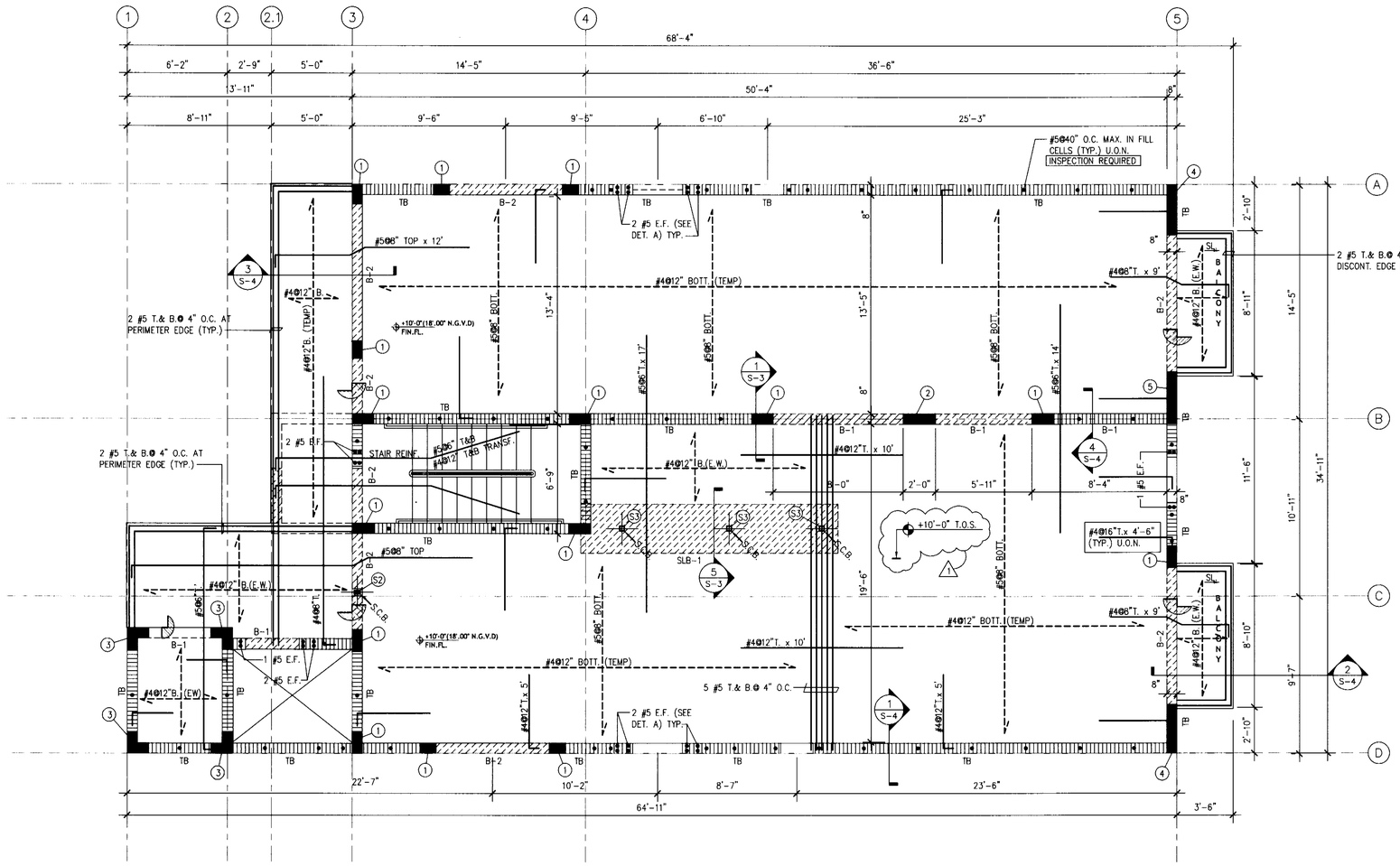

SECOND FLOOR FRAMING PLAN

SCALE: 1/4" = 1'-0"

NOTE:

1- VERIFY DIMENSIONS, ELEVATIONS, STEPS, SLOPES, ETC. WITH ARCHITECTURAL DRAWINGS PRIOR TO ANY WORK.

2- SLAB TO BE 8" THICK (f'c=5 KSI) U.O. NOTED
(1" TOP CONC. COVER SLAB SURFACE AND BOTTOM,
1 ½" TOP & BOTT. CONC. COVER FOR EXTERIOR SLAB SURFACE)

3- WALL REINFORCEMENT - INSPECTION REQUIRED

4- EXTERIOR WALLS TO HAVE ¾" RECESS.

5- DESIGN LOADS: LL= 40 P.S.F. (100 P.S.F. HALLWAYS)
ADDITIONAL DL= 35 P.S.F.

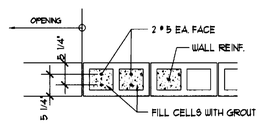

TYP. MASONRY DETAIL "A"
N.T.S.

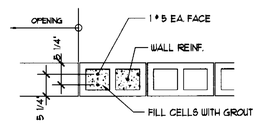

TYP. MASONRY DETAIL "B"
N.T.S.

COLUMN SCHEDULE

MARK	TYPE	SIZE	REINFORCEMENT	#3 TIES @	REMARKS
1	CONCRETE	8" x 16"	4 # 6	8"	
2	CONCRETE	8" x 24"	6 # 6	8"- 2 SETS	
3	CONCRETE	8" x 16"x 16"	7 # 6	8"- 2 SETS	
4	CONCRETE	8" x 36"	8 # 6	8"- 2 SETS	
5	CONCRETE	8" x 38"+-	8 # 6	8"- 2 SETS	
S2	STEEL	4"x 4"x 3/8"	8"x 12"x 1" BASE PL.	8"x 12"x 1" CAP PL.	
S3	STEEL	4"x 4"x 3/8"	12"x 12"x 1" BASE PL.	8"x 12"x 1" CAP PL.	(*) EXCENTRIC

1- VERIFY COLUMNS DIMENSION SIZES AND LOCATION WITH ARCHITECTURAL DWG'S. PRIOR TO ANY WORK

2- STEEL COLUMNS TO BE STRUCTURAL TUBE, Fy=46KSI (CONCRETE FILLED)

3- BASE & CAP PLATES TO HAVE 4-3/4" DIA. ANCHOR BOLTS

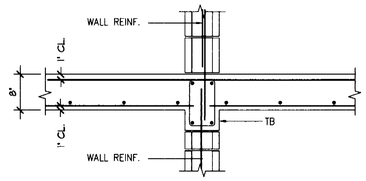

SECTION 1/S-3
SCALE: 3/4" = 1'-0"

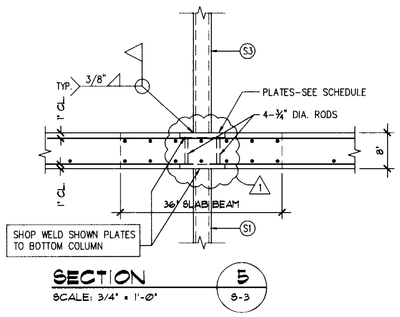

SECTION 5/S-3
SCALE: 3/4" = 1'-0"

DRAWN BY: SL
12-10-06
REVISIONS:
1 2-08-07 BLDG. DEPT. COMMENT

2DESIGN INC
ANTHONY LEON
AR0006752
ARCHITECTURE
4300 BISCAYNE BLVD. SUITE#604 MIAMI, FL 33137 T.305.438.9377 F.305.438.9378

SEAL

NEW BLDG. FOR
1529 JEFFERSON AVE.
MIAMI BEACH, FL
33139

OFFICE COPY
CITY OF MIAMI BEACH
APPROVED FOR PERMIT BY
THE FOLLOWING:

BUILDING:
ZONING: JUN 12 200
DRB/HPB:
CONCURRENCY:
PLUMBING:
ELECTRICAL:
MECHANICAL:
FIRE PREV.:
ENGINEERING:
PUBLIC WORKS:
STRUCTURAL:
ACCESS.:
LEVEL:

As per ... tion 104.5.3
... SUPERVISOR

Sam Lyubkin, P.E.
Consulting Engineer
Forum Building 2632 Hollywood Boulevard
Suite 103 Hollywood, Florida 33020
(954) 922-8845
P.E. #34306

TO THE BEST OF THE ENGINEER'S KNOWLEDGE, THE PLANS AND SPECIFICATIONS BY THE ENGINEER FOR THIS BUILDING COMPLY WITH THE MINIMUM APPLICABLE BUILDING CODES.

S-3
OF 8

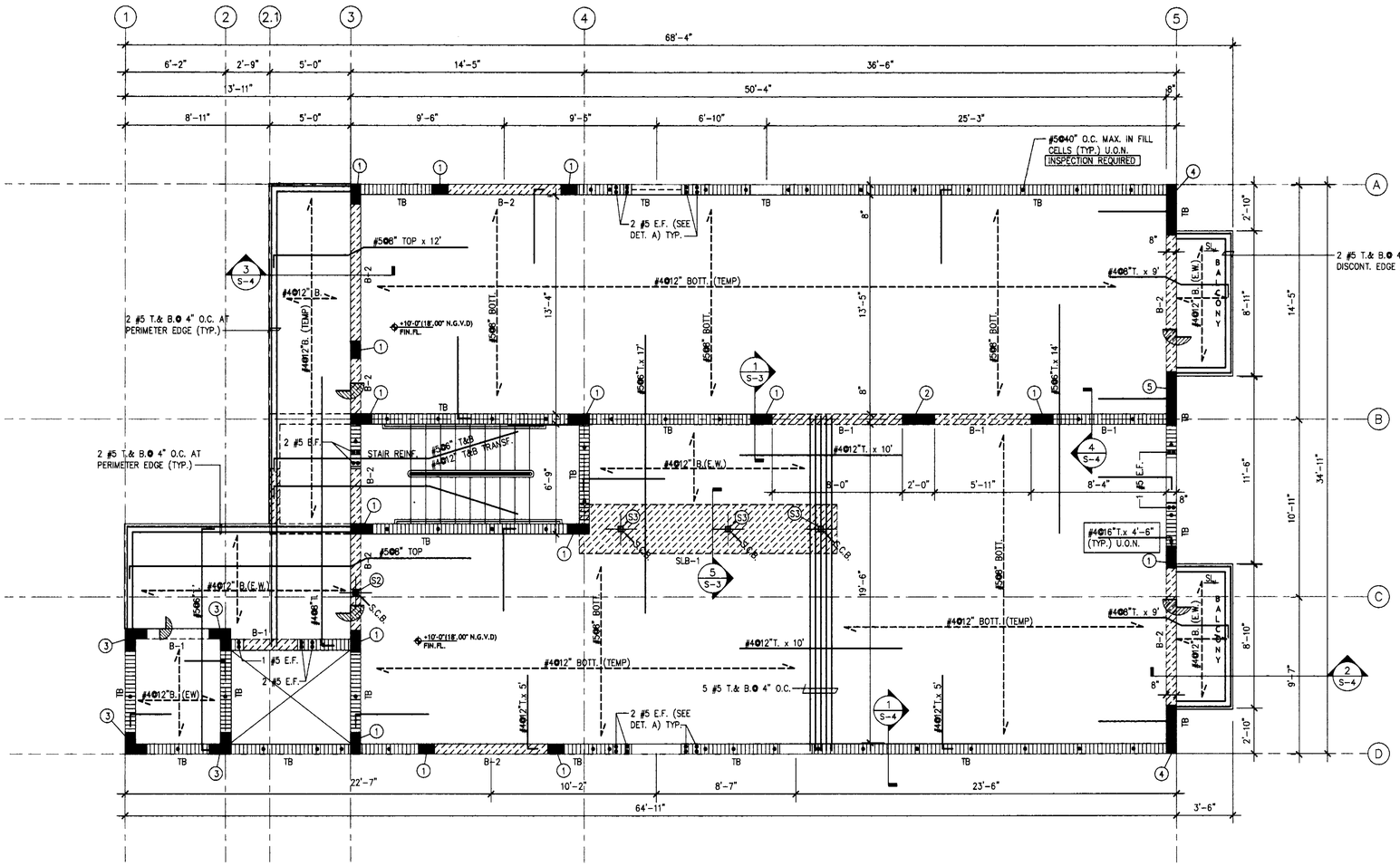

SECOND FLOOR FRAMING PLAN

SCALE: 1/4" = 1'-0"

NOTE:

1- VERIFY DIMENSIONS, ELEVATIONS, STEPS, SLOPES, ETC. WITH ARCHITECTURAL DRAWINGS PRIOR TO ANY WORK.

2- SLAB TO BE 8" THICK ($f'c$=5 KSI) U.O. NOTED (1" TOP CONC. COVER SLAB SURFACE AND BOTTOM, 1 ½" TOP & BOTT. CONC. COVER FOR EXTERIOR SLAB SURFACE)

3- WALL REINFORCEMENT – INSPECTION REQUIRED

4- EXTERIOR WALLS TO HAVE ¾" RECESS.

5- DESIGN LOADS: LL= 40 P.S.F. (100 P.S.F. HALLWAYS) ADDITIONAL DL= 35 P.S.F.

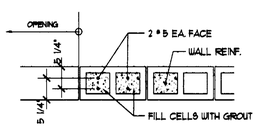

TYP. MASONRY DETAIL "A"
N.T.S.

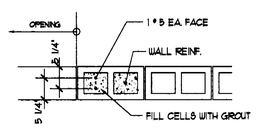

TYP. MASONRY DETAIL "B"
N.T.S.

COLUMN SCHEDULE

MARK	TYPE	SIZE	REINFORCEMENT	#3 TIES @	REMARKS
1	CONCRETE	8" x 16"	4 # 6	8"	
2	CONCRETE	8" x 24"	6 # 6	8"- 2 SETS	
3	CONCRETE	8" x 16"x 16"	7 # 6	8"- 2 SETS	
4	CONCRETE	8" x 36"	8 # 6	8"- 2 SETS	
5	CONCRETE	8" x 38"+-	8 # 6	8"- 2 SETS	
S2	STEEL	4"x 4"x 3/8"	8"x 12"x 1" BASE PL.	8"x 12"x 1" CAP PL.	
S3	STEEL	4"x 4"x 3/8"	12"x 12"x 1" BASE PL.	8"x 12"x 1" CAP PL.	(*) EXCENTRIC

1- VERIFY COLUMNS DIMENSION SIZES AND LOCATION WITH ARCHITECTURAL DWG'S. PRIOR TO ANY WORK

2- STEEL COLUMNS TO BE STRUCTURAL TUBE, Fy=46KSI (CONCRETE FILLED)

3- BASE & CAP PLATES TO HAVE 4-3/4" DIA. ANCHOR BOLTS

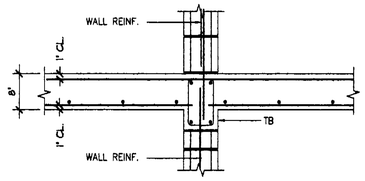

SECTION 1 / S-3
SCALE: 3/4" = 1'-0"

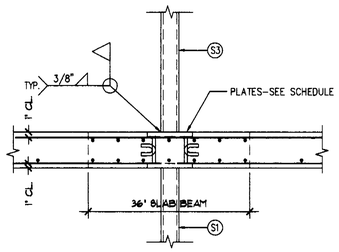

SECTION 5 / S-3
SCALE: 3/4" = 1'-0"

DRAWN BY:

REVISIONS:

SEAL

3DESIGN, INC
ANTHONY LEON
AR0006752
ARCHITECTURE
4300 BISCAYNE BLVD. SUITE#604 MIAMI, FL 33137 T.305.438.9377 F.305.438.9378

NEW BLDG. FOR
1529 JEFFERSON AVE.
MIAMI BEACH, FL
33139

CITY OF MIAMI BEACH
APPROVED

Sam Lyubkin, P.E.
Consulting Engineer
Forum Building 2632 Hollywood Boulevard
Suite 103 Hollywood, Florida 33020
(954) 922-8845
P.E. #34306

TO THE BEST OF THE ENGINEER'S KNOWLEDGE, THE PLANS AND SPECIFICATIONS BY THE ENGINEER FOR THIS BUILDING COMPLY WITH THE MINIMUM APPLICABLE BUILDING CODES

12-13-23
Date

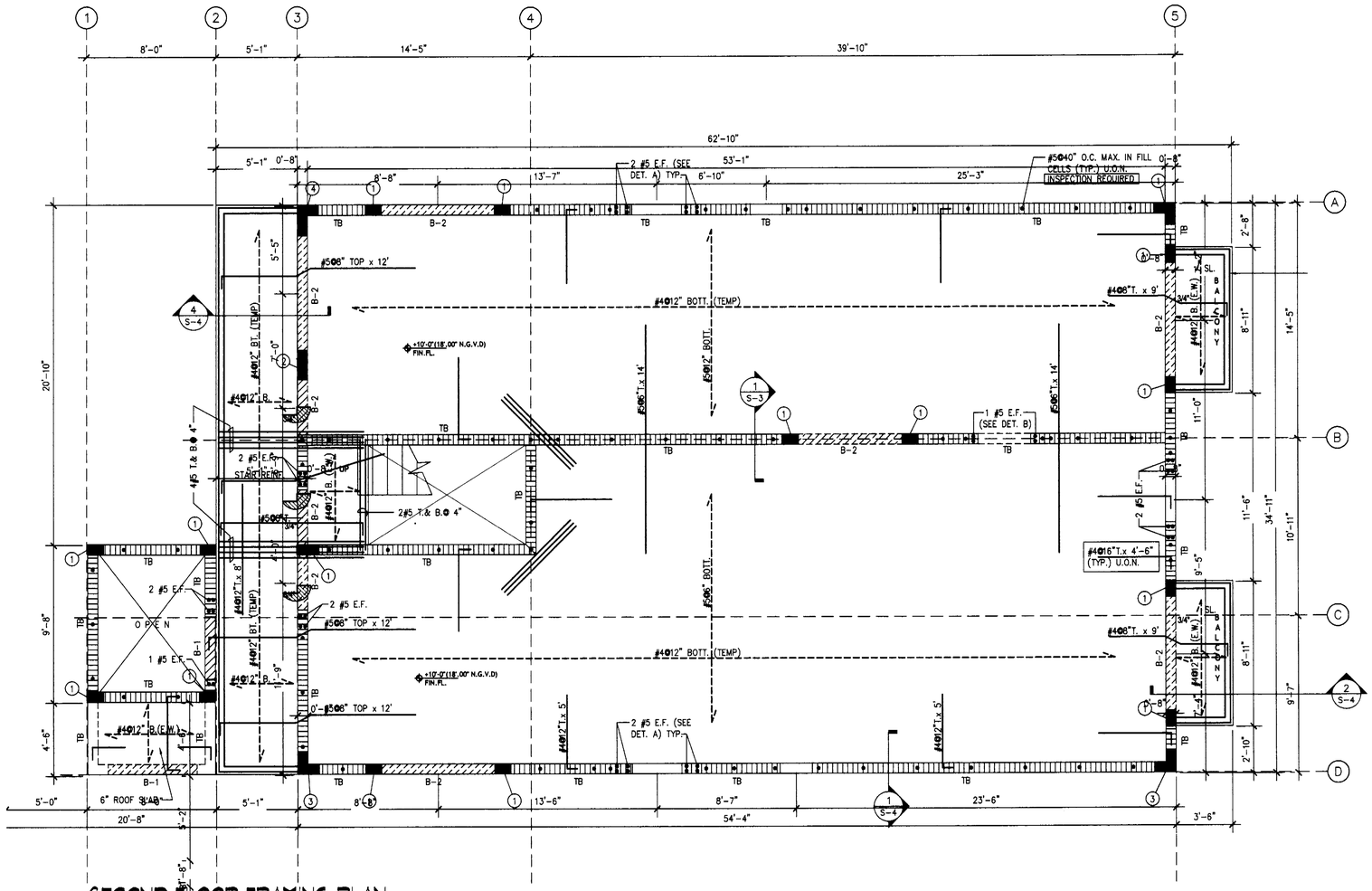

SECOND FLOOR FRAMING PLAN

SCALE: 1/4" = 1'-0"

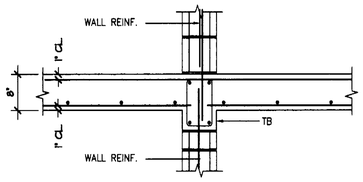

SECTION 1/S-3

SCALE: 3/4" = 1'-0"

NOTE:

1- VERIFY DIMENSIONS, ELEVATIONS, STEPS, SLOPES, ETC. WITH ARCHITECTURAL DRAWINGS PRIOR TO ANY WORK.

2- SLAB TO BE 8" THICK (f'c=5 KSI) U.O. NOTED (1" TOP CONC. COVER SLAB SURFACE AND BOTTOM, 1 ½" TOP & BOTT. CONC. COVER FOR EXTERIOR SLAB SURFACE)

3- WALL REINFORCEMENT - INSPECTION REQUIRED

4- EXTERIOR WALLS TO HAVE ¾" RECESS.

5- DESIGN LOADS: LL= 40 P.S.F. (100 P.S.F. HALLWAYS) ADDITIONAL DL= 35 P.S.F.

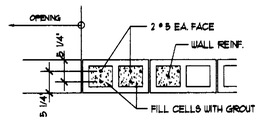

TYP. MASONRY DETAIL "A"

N.T.S.

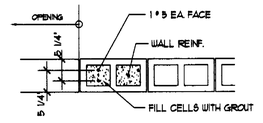

TYP. MASONRY DETAIL "B"

N.T.S.

COLUMN SCHEDULE

MARK	TYPE	SIZE	REINFORCEMENT	#3 TIES @	REMARKS
1	CONCRETE	8" x 16"	4 # 6	8"	
2	CONCRETE	8" x 22"	6 # 6	8"- 2 SETS	
3	CONCRETE	8" x 16"x 16"	7 # 6	8"- 2 SETS	
4	CONCRETE	8" x 16"x 23"	9 # 6	8"- 2 SETS	

1- VERIFY COLUMNS DIMENSION SIZES AND LOCATION WITH ARCHITECTURAL DWG'S. PRIOR TO ANY WORK

DRAWN BY:

REVISIONS:

3DESIGN, INC
ANTHONY LEON
AR0016752
ARCHITECTURE
4300 BISCAYNE BLVD. SUITE#G04 MIAMI, FL 33137 T.305.438.9377 F.305.438.9378

SEAL

NEW BLDG. FOR 1529 JEFFERSON AVE. MIAMI BEACH, FL 33139

OFFICE C...
CITY OF M...
APPROVED ...
THE ...
BUILDING:
ZONING:
DRB/HPB:
CONCURRENC...
PLUMBING:
ELECTRICAL:
MECHANICAL:
FIRE PREVENTION:
ENGINEERING:
PUBLIC WORK:
STRUCTURAL:
ACCESSIBILITY:
ELEVATOR:
As per Flor...
REVIEWED

CIT...

Sam Lyubkin, P.E.
Consulting Engineer
Forum Building 2632 Hollywood Boulevard
Suite 103 Hollywood, Florida 33020
(954) 922-8845

TO THE BEST OF THE ENGINEER'S KNOWLEDGE, THE PLANS AND SPECIFICATIONS BY THE ENGINEER FOR THIS BUILDING COMPLY WITH THE MINIMUM APPLICABLE BUILDING CODES

P.E. #34306

6-20-06

S-3

OF 8

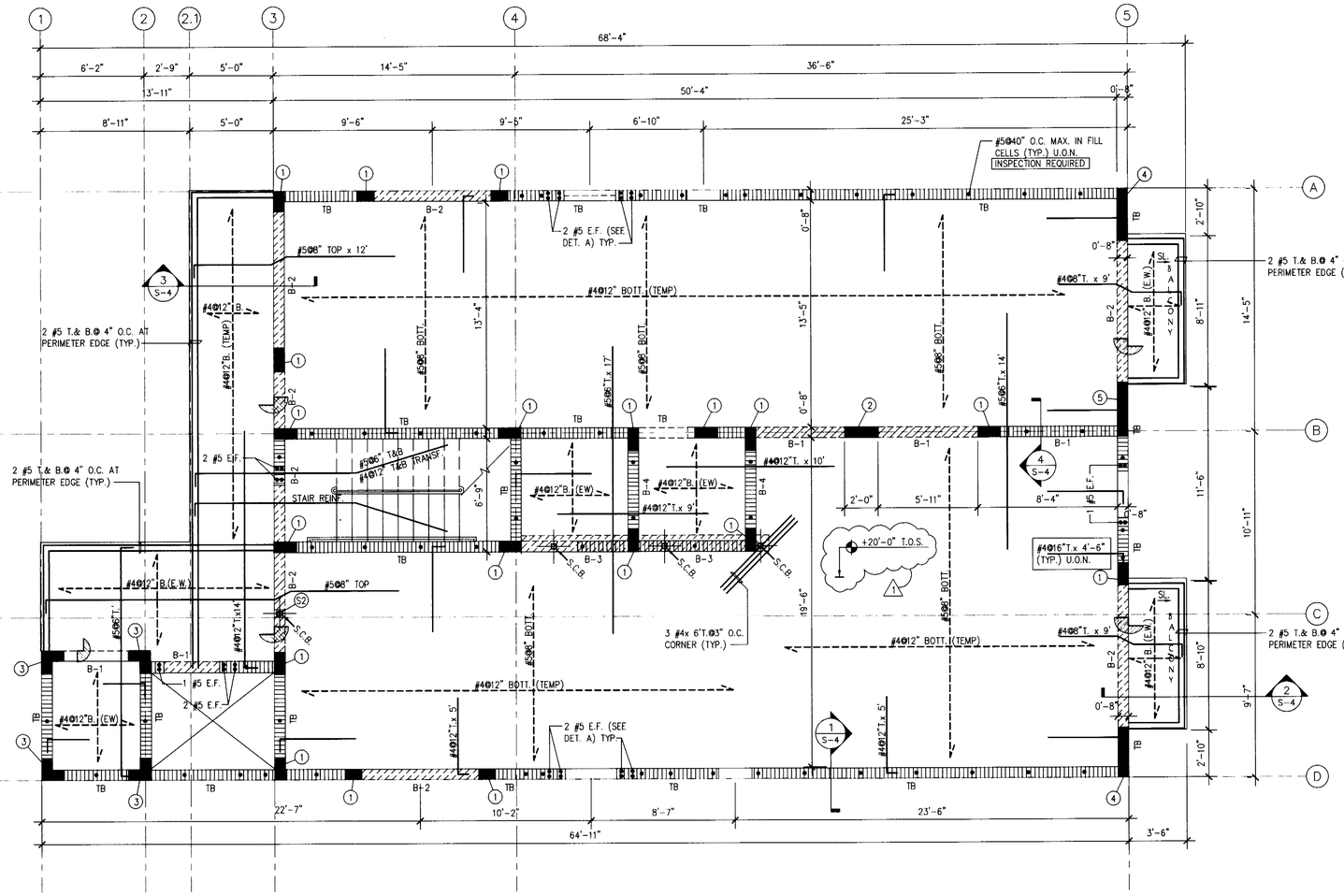

THIRD FLOOR FRAMING PLAN

SCALE: 1/4" = 1'-0"

NOTE:

1- VERIFY DIMENSIONS, ELEVATIONS, STEPS, SLOPES, ETC. WITH ARCHITECTURAL DRAWINGS PRIOR TO ANY WORK.

2- SLAB TO BE 8" THICK ($f'c$=5 KSI) U.O. NOTED
(1" TOP CONC. COVER SLAB SURFACE & BOTTOM,
1 ½" TOP & BOTT. CONC. COVER FOR EXTERIOR SLAB SURFACE

3- WALL REINFORCEMENT - INSPECTION REQUIRED

4- EXTERIOR WALLS TO HAVE ¾" RECESS.

5- DESIGN LOADS: LL= 40 P.S.F. (100 P.S.F. HALLWAYS)
ADDITIONAL DL= 35 P.S.F.

COLUMN SCHEDULE

MARK	TYPE	SIZE	REINFORCEMENT	#3 TIES @	REMARKS
1	CONCRETE	8" x 16"	4 # 6	8"	
2	CONCRETE	8" x 24"	6 # 6	8"- 2 SETS	
3	CONCRETE	8" x 16"x 16"	7 # 6	8"- 2 SETS	
4	CONCRETE	8" x 36"	8 # 6	8"- 2 SETS	
5	CONCRETE	8" x 38"+-	13 # 6	8"- 2 SETS	
S2	STEEL	4"x 4"x 3/8"	8"x 12"x 1" BASE PL.	8"x 12"x 1" CAP PL.	

1- VERIFY COLUMNS DIMENSION SIZES AND LOCATION WITH ARCHITECTURAL DWG'S. PRIOR TO ANY WORK

2- STEEL COLUMNS TO BE STRUCTURAL TUBE, Fy=46KSI (CONCRETE FILLED)

3- BASE & CAP PLATES TO HAVE 4-3/4" DIA. ANCHOR BOLTS

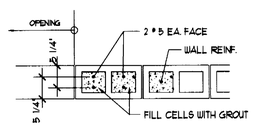

TYP. MASONRY DETAIL "A"
N.T.S.

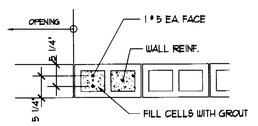

TYP. MASONRY DETAIL "B"
N.T.S.

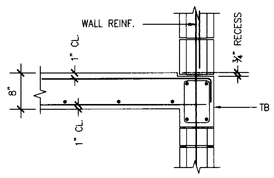

SECTION 1/S-4
SCALE: 3/4" = 1'-0"

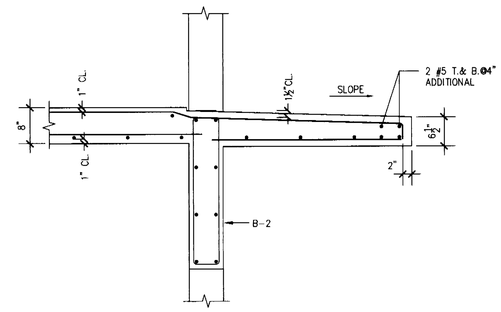

SECTION 2/S-4
SCALE: 3/4" = 1'-0"

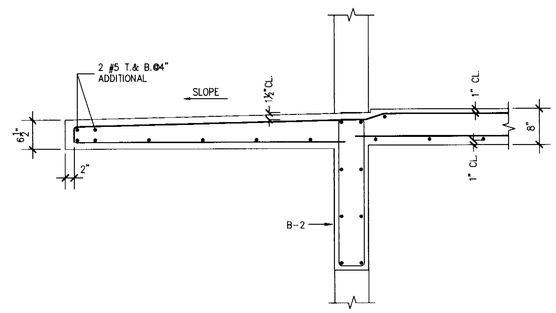

SECTION 3/S-4
SCALE: 3/4" = 1'-0"

3DESIGN INC
ANTHONY LEON
AR0006572
ARCHITECTURE
4300 BISCAYNE BLVD. SUITE#604 MIAMI, FL 33137 T.305.438.9377 F.305.438.9378

DRAWN BY: SL
12-10-06
REVISIONS:
1 2-08-07 BLDG. DEPT. COMMENT

SEAL

NEW BLDG. FOR
1529 JEFFERSON AVE.
MIAMI BEACH, FL
33139

RECEIVED JUN 12 2007

Sam Lyubkin, P.E.
Consulting Engineer
Forum Building 2632 Hollywood Boulevard
Suite 103 Hollywood, Florida 33020
(954) 922-8845
P.E. #34306

TO THE BEST OF THE ENGINEER'S KNOWLEDGE, THE PLANS AND SPECIFICATIONS BY THE ENGINEER FOR THIS BUILDING COMPLY WITH THE MINIMUM APPLICABLE BUILDING CODES

Seal

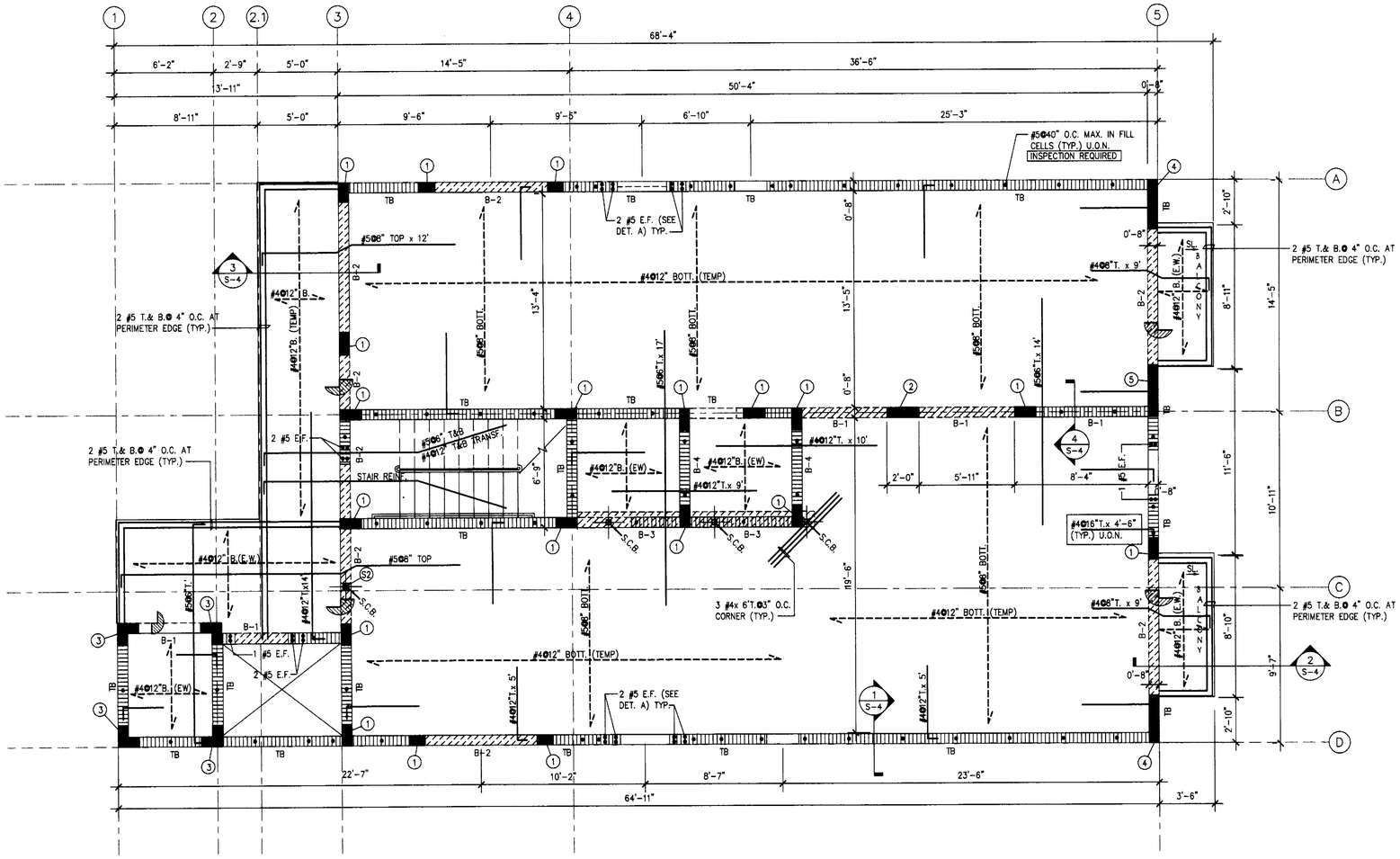

THIRD FLOOR FRAMING PLAN

SCALE: 1/4" = 1'-0"

NOTE:

1- VERIFY DIMENSIONS, ELEVATIONS, STEPS, SLOPES, ETC. WITH ARCHITECTURAL DRAWINGS PRIOR TO ANY WORK.

2- SLAB TO BE 8" THICK ($f'c$=5 KSI) U.O. NOTED (1" TOP CONC. COVER SLAB SURFACE & BOTTOM, 1 ½" TOP & BOTT. CONC. COVER FOR EXTERIOR SLAB SURFACE

3- WALL REINFORCEMENT - INSPECTION REQUIRED

4- EXTERIOR WALLS TO HAVE ¾" RECESS.

5- DESIGN LOADS: LL= 40 P.S.F. (100 P.S.F. HALLWAYS) ADDITIONAL DL= 35 P.S.F.

COLUMN SCHEDULE

MARK	TYPE	SIZE	REINFORCEMENT	#3 TIES @	REMARKS
1	CONCRETE	8" x 16"	4 # 6	8"	
2	CONCRETE	8" x 24"	6 # 6	8"- 2 SETS	
3	CONCRETE	8" x 16"x 16"	7 # 6	8"- 2 SETS	
4	CONCRETE	8" x 36"	8 # 6	8"- 2 SETS	
5	CONCRETE	8" x 38"+-	13 # 6	8"- 2 SETS	
S2	STEEL	4"x 4"x 3/8"	8"x 12"x 1" BASE PL.	8"x 12"x 1" CAP PL.	

1- VERIFY COLUMNS DIMENSION SIZES AND LOCATION WITH ARCHITECTURAL DWG'S. PRIOR TO ANY WORK

2- STEEL COLUMNS TO BE STRUCTURAL TUBE, Fy=46KSI (CONCRETE FILLED)

3- BASE & CAP PLATES TO HAVE 4-3/4" DIA. ANCHOR BOLTS

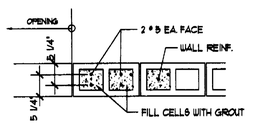

TYP. MASONRY DETAIL "A"

N.T.S.

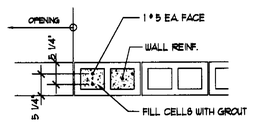

TYP. MASONRY DETAIL "B"

N.T.S.

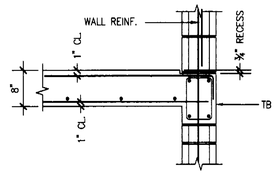

SECTION 1 / S-4

SCALE: 3/4" = 1'-0"

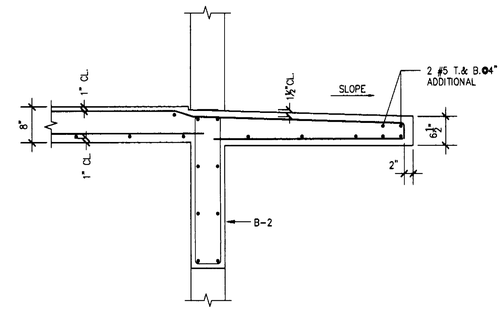

SECTION 2 / S-4

SCALE: 3/4" = 1'-0"

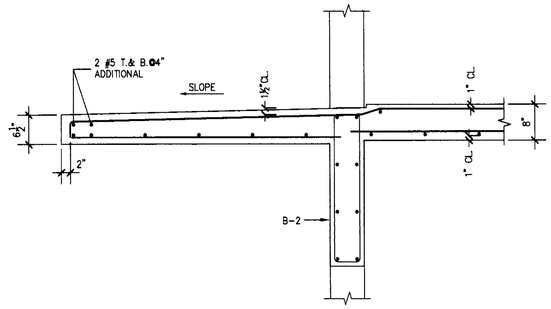

SECTION 3 / S-4

SCALE: 3/4" = 1'-0"

DRAWN BY:

REVISIONS:

SEAL

3DESIGN INC
ANTHONY LEON
AR0006752
ARCHITECTURE
4300 BISCAYNE BLVD. SUITE#G04 MIAMI, FL 33137 T.305.438.9377 F.305.438.9378

NEW BLDG. FOR
1529 JEFFERSON AVE.
MIAMI BEACH, FL
33139

CITY OF MIAMI BEACH

Sam Lyubkin, P.E.
Consulting Engineer
Forum Building 2632 Hollywood Boulevard
Suite 103 Hollywood, Florida 33020
(954) 922-8845
P.E. #34306

TO THE BEST OF THE ENGINEER'S KNOWLEDGE, THE PLANS AND SPECIFICATIONS BY THE ENGINEER FOR THIS BUILDING COMPLY WITH THE MINIMUM APPLICABLE BUILDING CODES

12-13-06

S-4

OF 8

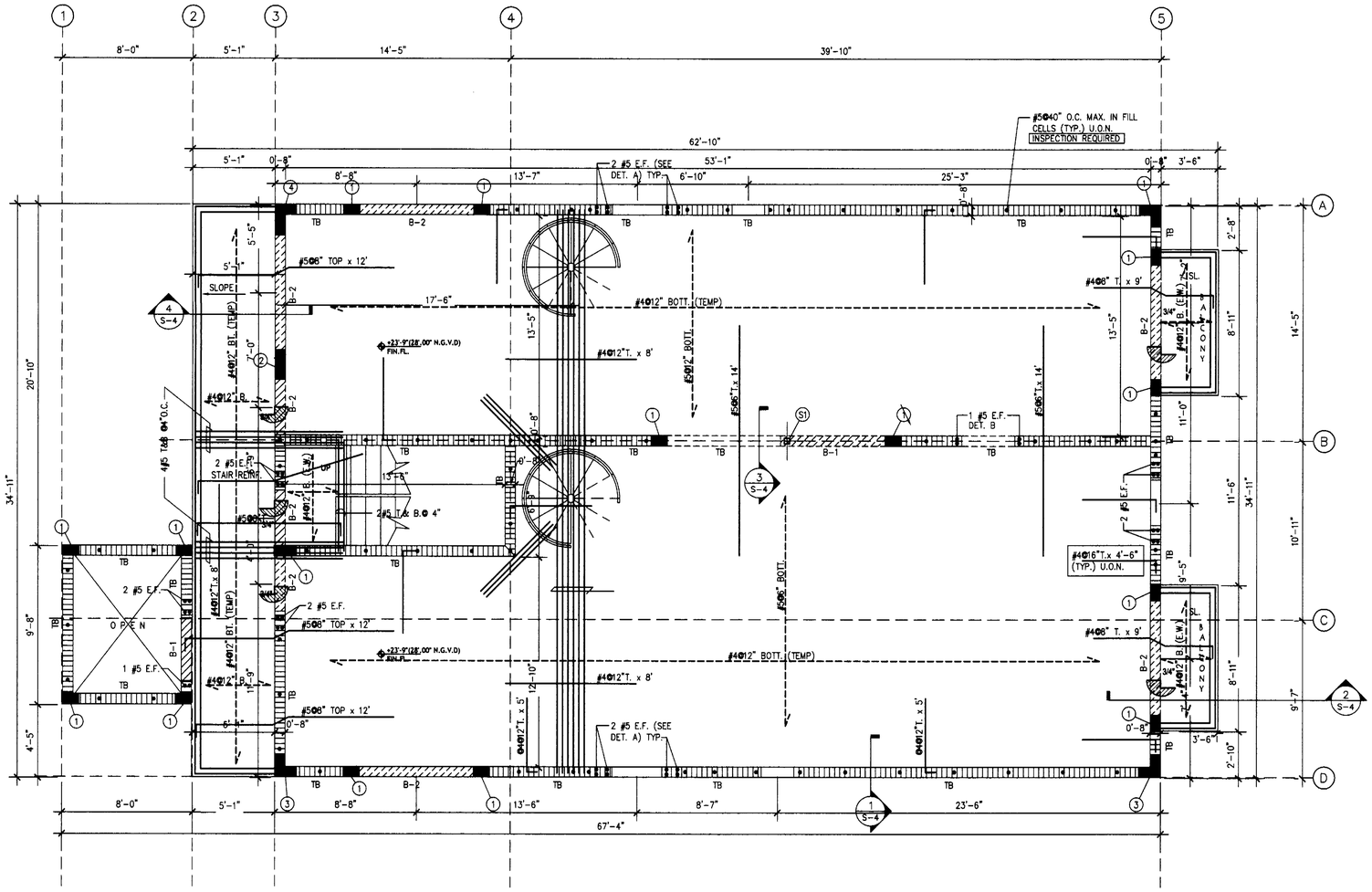

THIRD FLOOR FRAMING PLAN

SCALE: 1/4" = 1'-0"

NOTE:

1- VERIFY DIMENSIONS, ELEVATIONS, STEPS, SLOPES, ETC. WITH ARCHITECTURAL DRAWINGS PRIOR TO ANY WORK.

2- SLAB TO BE 8" THICK (f'c=5 KSI) U.O. NOTED
(1" TOP CONC. COVER SLAB SURFACE & BOTTOM,
1 ½" TOP & BOTT. CONC. COVER FOR EXTERIOR SLAB SURFACE

3- WALL REINFORCEMENT - INSPECTION REQUIRED

4- EXTERIOR WALLS TO HAVE ¾" RECESS.

5- DESIGN LOADS: LL= 40 P.S.F. (100 P.S.F. HALLWAYS)
ADDITIONAL DL= 35 P.S.F.

COLUMN SCHEDULE

MARK	TYPE	SIZE	REINFORCEMENT	#3 TIES @	REMARKS
1	CONCRETE	8" x 16"	4 # 6	8"	
2	CONCRETE	8" x 22"	6 # 6	8"- 2 SETS	
3	CONCRETE	8" x 16"x 16"	7 # 6	8"- 2 SETS	
4	CONCRETE	8" x 16"x 23"	9 # 6	8"- 2 SETS	
S1	STEEL	5"x 5"x 3/8"	8"x 12"x 1" B. PL.	8"x 12"x 1" C. PL.	

1- VERIFY COLUMNS DIMENSION SIZES AND LOCATION WITH ARCHITECTURAL DWG'S. PRIOR TO ANY WORK

2- STEEL COLUMNS TO BE STRUCTURAL TUBE, Fy=46KSI (CONCRETE FILLED)

3- BASE & CAP PLATES TO HAVE 4-3/4" DIA. ANCHOR BOLTS

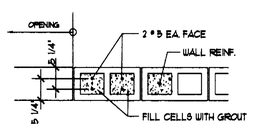

TYP. MASONRY DETAIL "A"
N.T.S.

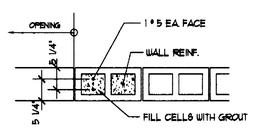

TYP. MASONRY DETAIL "B"
N.T.S.

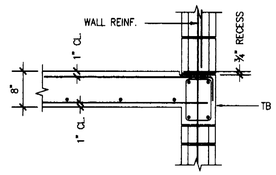

SECTION 1 / S-4
SCALE: 3/4" = 1'-0"

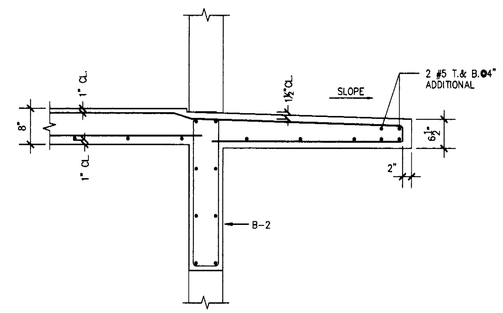

SECTION 2 / S-4
SCALE: 3/4" = 1'-0"

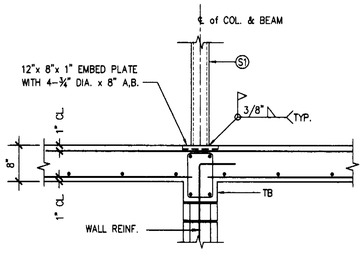

SECTION 3 / S-4
SCALE: 3/4" = 1'-0"

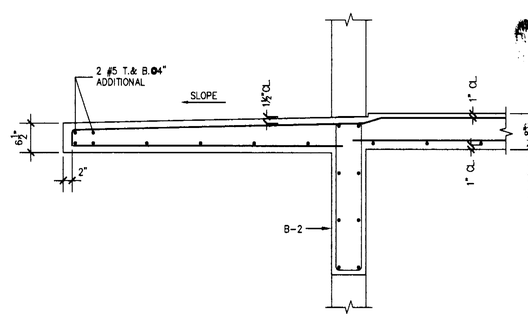

SECTION 4 / S-4
SCALE: 3/4" = 1'-0"

OFFICE COPY
CITY OF MIAMI BEACH
APPROVED FOR PERMIT BY
DRAWING:
PLUMBING:
ELECTRICAL:
MECHANICAL:
FIRE PREVENTION:
ENGINEERING:
PUBLIC WORKS:
STRUCTURAL:
ACCESSIBILITY:
ELEVATOR:
As per Florida Building Code Section 104.5.3
REVIEWED FOR CODE COMPLIANCE

DRAWN BY:

REVISIONS:

SEAL

3DESIGN INC
ANTHONY LEON
ARCHITECTURE
AA0004725
4300 BISCAYNE BLVD. SUITE#G04 MIAMI, FL 33137 T.305.438.9377 F.305.438.9378

NEW BLDG. FOR
1529 JEFFERSON AVE.
MIAMI BEACH, FL
33139

Sam Lyubkin, P.E.
Consulting Engineer
Forum Building 2632 Hollywood Boulevard
Suite 103 Hollywood, Florida 33020
(954) 922-8845
P.E. #34306

TO THE BEST OF THE ENGINEER'S KNOWLEDGE, THE PLANS AND SPECIFICATIONS BY THE ENGINEER FOR THIS BUILDING COMPLY WITH THE MINIMUM APPLICABLE BUILDING CODES

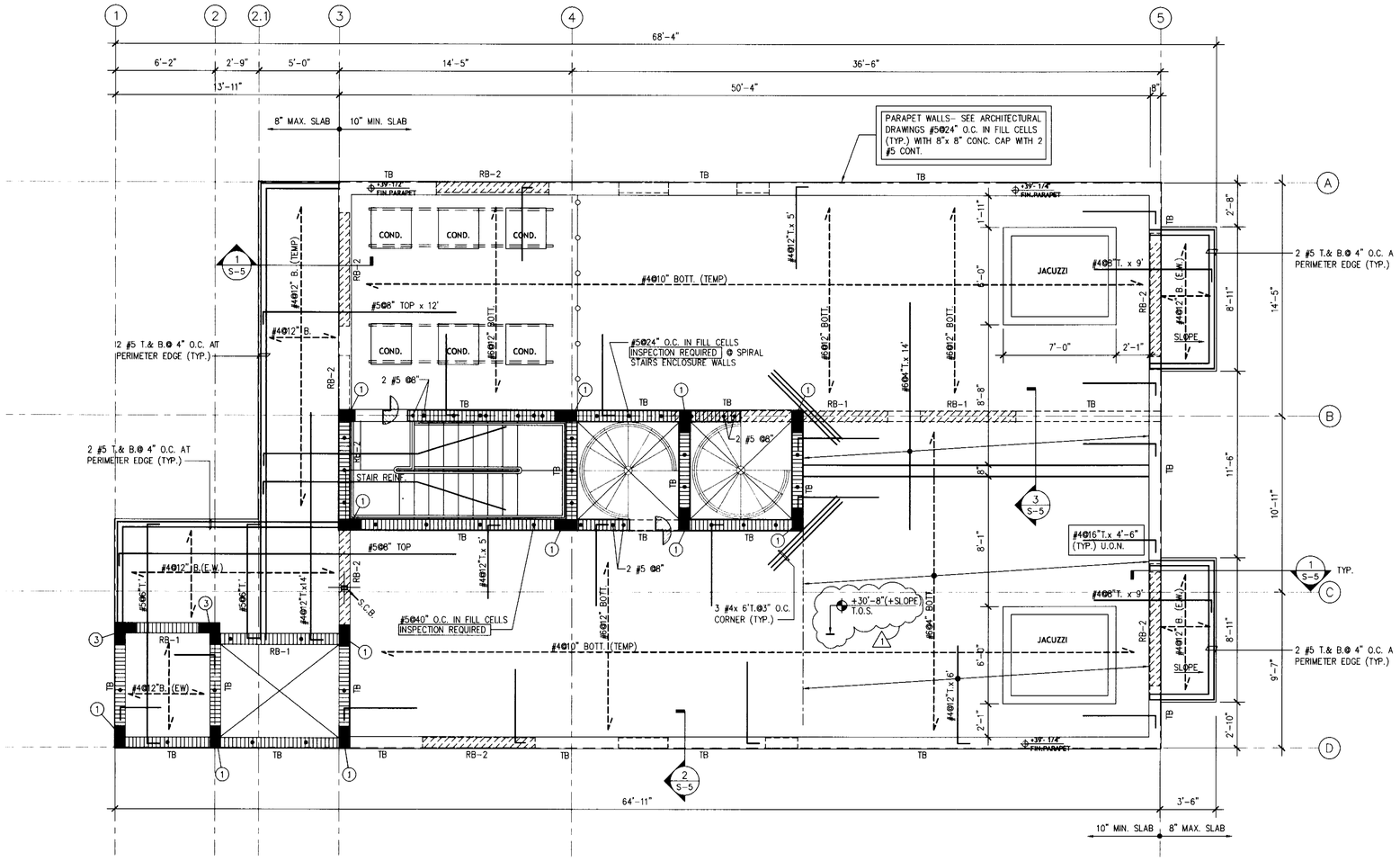

ROOF TERRACE FRAMING PLAN

SCALE: 1/4" = 1'-Ø"

NOTE:

1- VERIFY DIMENSIONS, ELEVATIONS, STEPS, SLOPES, ETC. WITH ARCHITECTURAL DRAWINGS PRIOR TO ANY WORK.

2- SLAB TO BE 10" THICK (f'c=5 KSI) U.O. NOTED:" OVERHANGS (1½" TOP & BOTT. CONC. COVER SLAB SURFACE,, 2" TOP CONC. COVER FOR TERRACE SLAB SURFACE AND 1" BOTTOM CONC. COVER), U. O. NOTED.

3- DESIGN LOADS: LL= 100 P.S.F.
ADDITIONAL DL= 80 P.S.F.
JACUZZI= 300 P.S.F.

4- SEE ARCH. SECTIONS ON SHEET A-5.0 FOR ADDITIONAL INFORMATION.

5- WALL REINFORCEMENT - INSPECTION REQUIRED

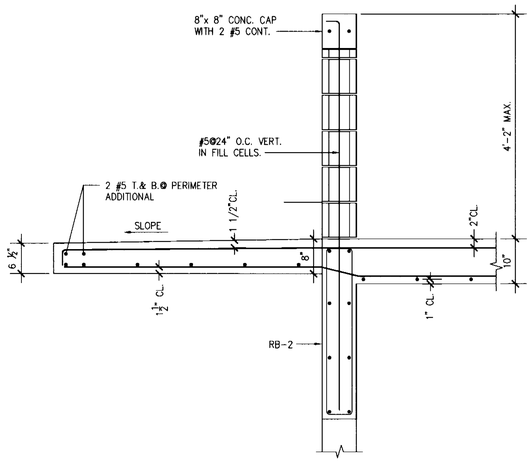

SECTION 1 S-5
SCALE: 3/4" = 1'-Ø"

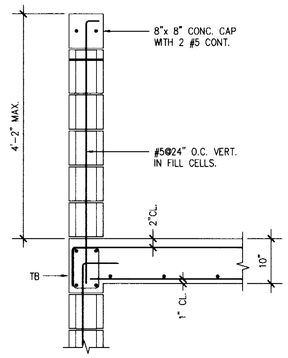

SECTION 2 S-5
SCALE: 3/4" = 1'-Ø"

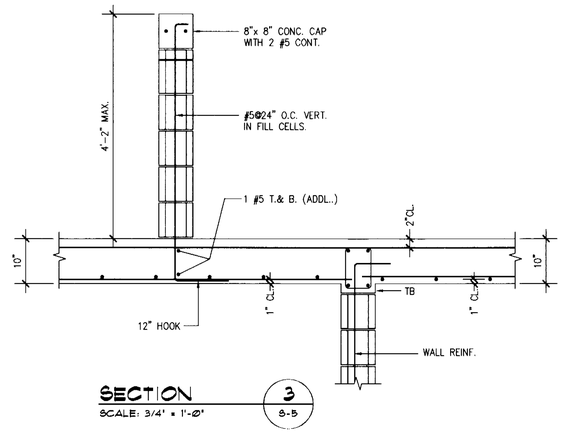

SECTION 3 S-5
SCALE: 3/4" = 1'-Ø"

3DESIGN INC
ANTHONY LEON
AR0016752
ARCHITECTURE
4300 BISCAYNE BLVD. SUITE#604 MIAMI, FL 33137 T.305.438.9377 F.305.438.9378

DRAWN BY: SL
12-10-06
REVISIONS:
1 2-08-07 BLDG. DEPT. COMMENT

SEAL

NEW BLDG. FOR
1529 JEFFERSON AVE.
MIAMI BEACH, FL
33139

RECEIVED JUN 12 2007

Sam Lyubkin, P.E.
Consulting Engineer
Forum Building 2632 Hollywood Boulevard
Suite 103 Hollywood, Florida 33020
(954) 922-8845
P.E. #34306

TO THE BEST OF THE ENGINEER'S KNOWLEDGE, THE PLANS AND SPECIFICATIONS BY THE ENGINEER FOR THIS BUILDING COMPLY WITH THE MINIMUM APPLICABLE BUILDING CODES

6-4-07
Date

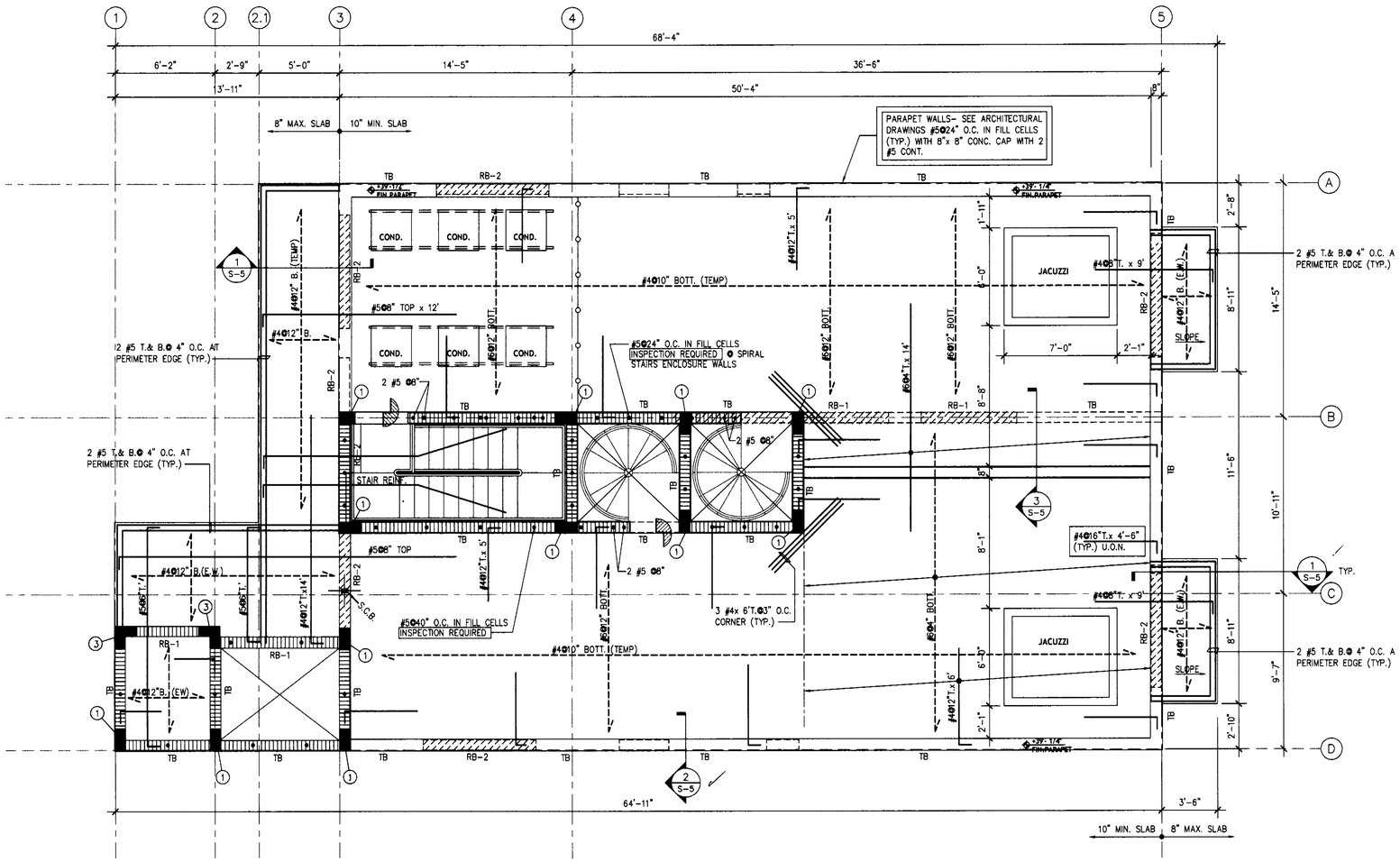

ROOF TERRACE FRAMING PLAN

SCALE: 1/4" = 1'-0"

NOTE:

1- VERIFY DIMENSIONS, ELEVATIONS, STEPS, SLOPES, ETC. WITH ARCHITECTURAL DRAWINGS PRIOR TO ANY WORK.

2- SLAB TO BE 10" THICK (f'c=5 KSI) U.O. NOTED:" OVERHANGS (1½" TOP & BOTT. CONC. COVER SLAB SURFACE, 2" TOP CONC. COVER FOR TERRACE SLAB SURFACE AND 1" BOTTOM CONC. COVER), U. O. NOTED.

3- DESIGN LOADS: LL= 100 P.S.F.
ADDITIONAL DL= 80 P.S.F.
JACUZZI= 300 P.S.F.

4- SEE ARCH. SECTIONS ON SHEET A-5.0 FOR ADDITIONAL INFORMATION.

5- WALL REINFORCEMENT - INSPECTION REQUIRED

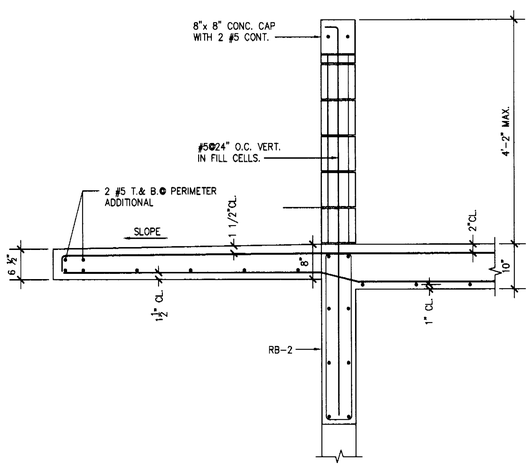

SECTION 1 S-5
SCALE: 3/4" = 1'-0"

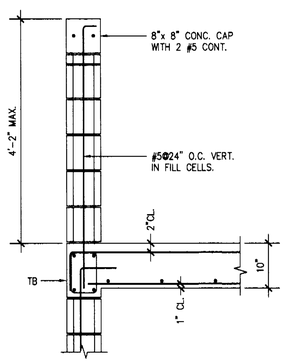

SECTION 2 S-5
SCALE: 3/4" = 1'-0"

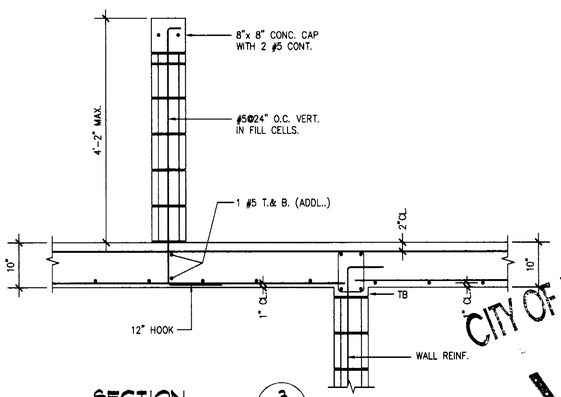

SECTION 3 S-5
SCALE: 3/4" = 1'-0"

CITY OF MIAMI BEACH
VOID

DRAWN BY:

REVISIONS:

3DESIGN, INC
ANTHONY LEON
AR0016752
ARCHITECTURE
4300 BISCAYNE BLVD. SUITE#G04 MIAMI, FL 33137 T.305.438.9377 F.305.438.9378

SEAL

NEW BLDG.
FOR
1529 JEFFERSON AVE.
MIAMI BEACH, FL
33139

Sam Lyubkin, P.E.
Consulting Engineer
Forum Building 2632 Hollywood Boulevard
Suite 103 Hollywood, Florida 33020
(954) 922-8845

TO THE BEST OF THE ENGINEER'S KNOWLEDGE, THE PLANS AND SPECIFICATIONS BY THE ENGINEER FOR THIS BUILDING COMPLY WITH THE MINIMUM APPLICABLE BUILDING CODES

P.E. #34306

12-13-00

S-5
OF 8

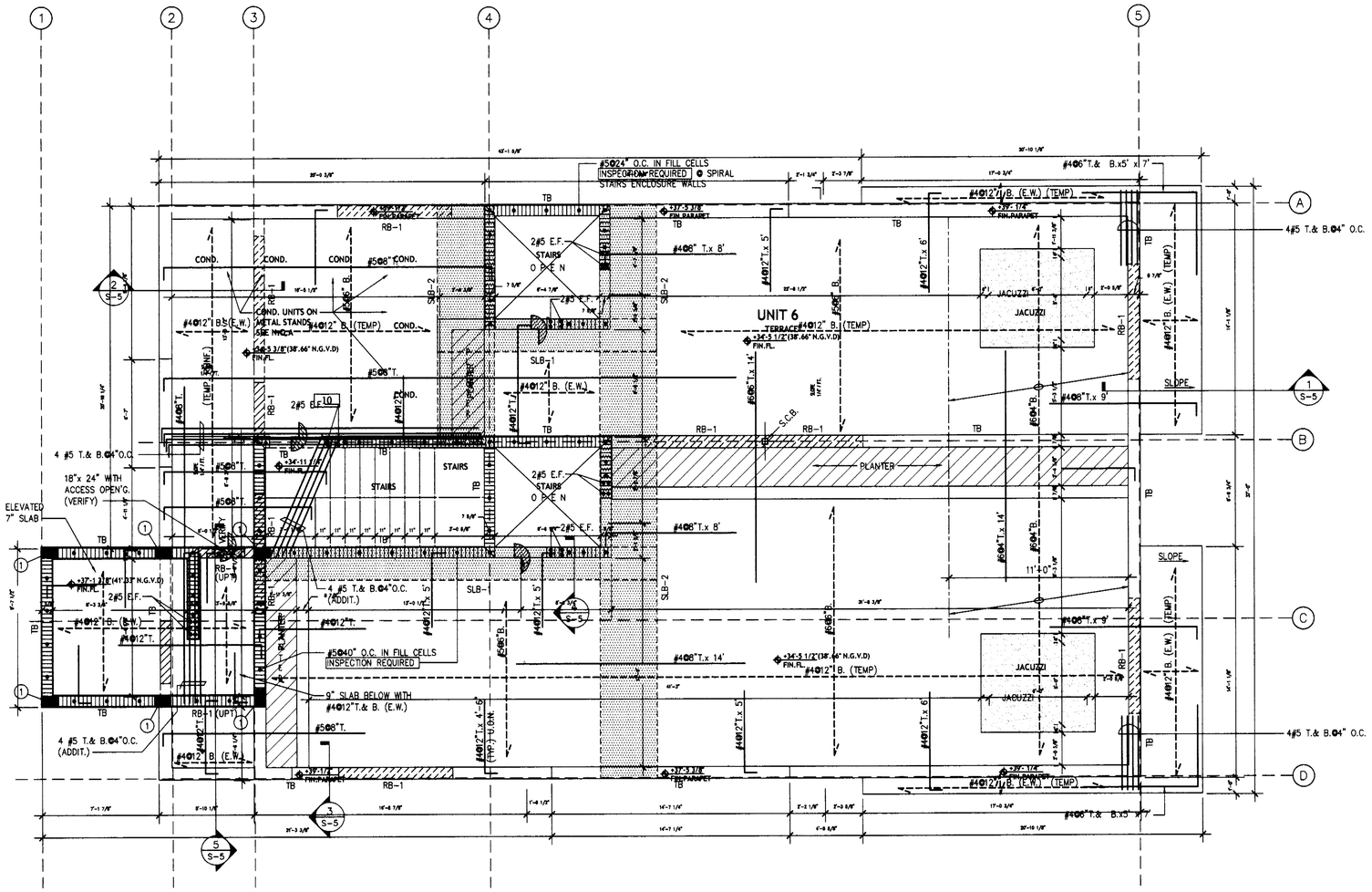

ROOF TERRACE FRAMING PLAN

SCALE: 1/4" = 1'-0"

NOTE:

1– VERIFY DIMENSIONS, ELEVATIONS, STEPS, SLOPES, ETC. WITH ARCHITECTURAL DRAWINGS PRIOR TO ANY WORK.

2– SLAB TO BE 9" THICK ($f'c$=5 KSI) U.O. NOTED
(1½" TOP CONC. COVER SLAB SURFACE,
1 ½" TOP CONC. COVER FOR EXTERIOR SLAB SURFACE AND BOTTOM CONC. COVER)

3– DESIGN LOADS: LL= 100 P.S.F.
ADDITIONAL DL= 80 P.S.F.
JACUZZI= 300 P.S.F.
PLANTER= 400 P.S.F.

4– SEE ARCH. SECTIONS ON SHEET A–5.0 FOR ADDITIONAL INFORMATION.

5– PLANTER WALLS–FILL ALL CELLS WITH CONC. PROVIDE SLAB & WALL WATERPROOFING, DRAINAGE, ETC.–SEE ARCH. DWG'S. & SPEC'S.

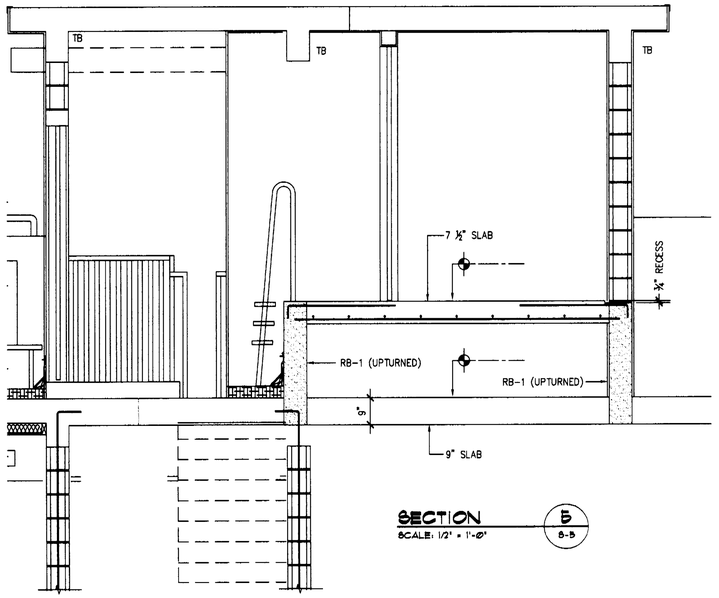

SECTION 5 / S-5
SCALE: 1/2" = 1'-0"

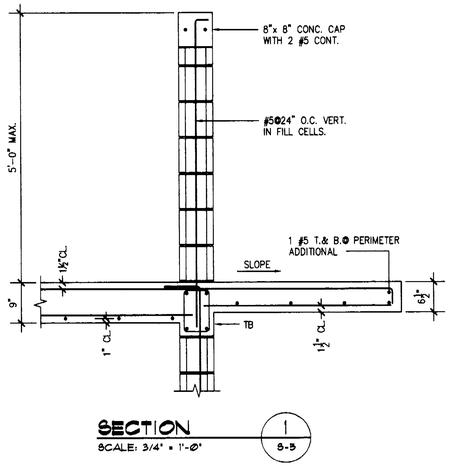

SECTION 1 / S-5
SCALE: 3/4" = 1'-0"

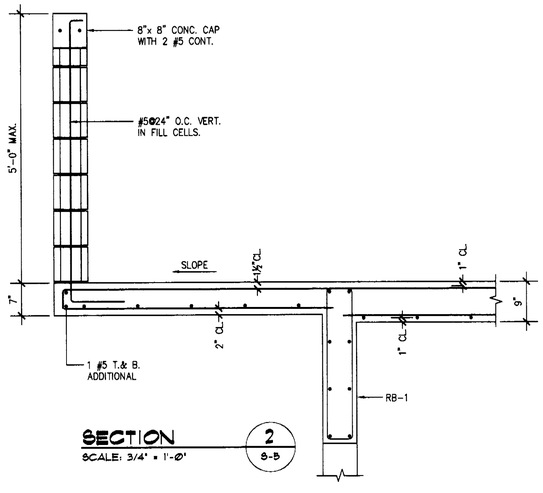

SECTION 2 / S-5
SCALE: 3/4" = 1'-0"

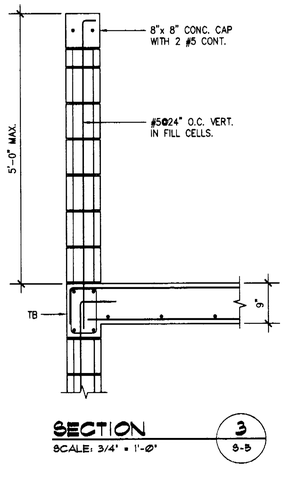

SECTION 3 / S-5
SCALE: 3/4" = 1'-0"

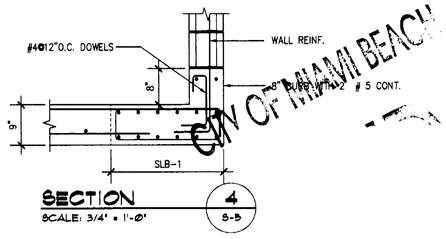

SECTION 4 / S-5
SCALE: 3/4" = 1'-0"

CITY OF MIAMI BEACH

DRAWN BY:

REVISIONS:

SEAL

3D DESIGN INC.
ANTHONY LEON
AR0006752
ARCHITECTURE
4300 BISCAYNE BLVD. SUITE#604 MIAMI, FL 33137 T.305.438.9377 F.305.438.9378

NEW BLDG.
FOR
1529 JEFFERSON AVE.
MIAMI BEACH , FL
33139

Sam Lyubkin, P.E.
Consulting Engineer
Forum Building 2632 Hollywood Boulevard
Suite 103 Hollywood, Florida 33020
(954) 922-8845
P.E. #34306

TO THE BEST OF THE ENGINEER'S KNOWLEDGE, THE PLANS AND SPECIFICATIONS BY THIS ENGINEER FOR THIS BUILDING COMPLY WITH THE MINIMUM APPLICABLE BUILDING CODES

6-20-06
Date

S–5
OF 8

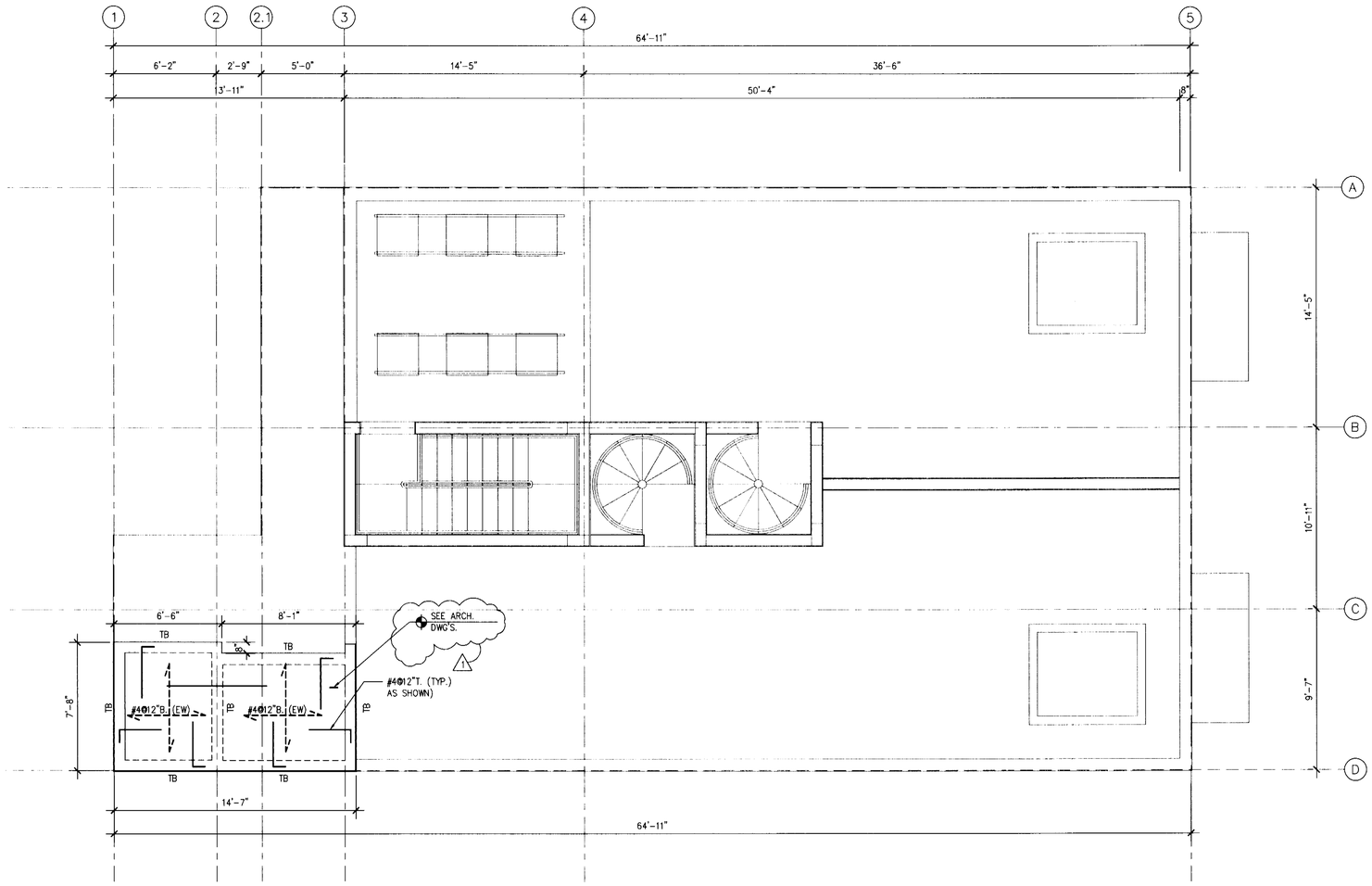

ROOF FRAMING PLAN

SCALE: 1/4" = 1'-0"

NOTE:

1- VERIFY DIMENSIONS, ELEVATIONS, STEPS, SLOPES, ETC. WITH ARCHITECTURAL DRAWINGS PRIOR TO ANY WORK.

2- SLAB TO BE 6" THICK (f'c=5 KSI) U.O. NOTED

3- DESIGN LOADS: LL= 30 P.S.F.
ADDITIONAL DL= 25 P.S.F.

BEAM SCHEDULE

MARK	TOP OF BM. ELEV.	SIZE W.	SIZE D.	LONGITUDINAL REINF. TOP	LONGITUDINAL REINF. BOTTOM	STIRRUPS SIZE	STIRRUPS SPACING	REMARKS
TB	TOP of SLAB	8"	12"	2 # 5	2 # 5	# 3	48"	
B-1	TOP of SLAB	8"	24"	2 # 6	2 # 6	# 3	8"	2 # 6 @ 1/2 DEPTH
B-2	TOP of SLAB	8"	34"+-	2 # 6	2 # 6	# 3	12"	2 # 6 @ 1/3 DEPTH
B-3	TOP of SLAB	12"	16"	3 # 6	3 # 6	# 3	6"	
B-4	TOP of SLAB	8"	16"	2 # 6	2 # 6	# 3	6"	
RB-1	TOP of SLAB	8"	24"	2 # 6	2 # 6	# 3	8"	2 # 6 @ 1/2 DEPTH
RB-2	TOP of SLAB	8"	42"+-	2 # 6	2 # 6	# 3	12"	2 # 6 @ 1/3 DEPTH
SLB-1	TOP of SLAB	36"	8"	7 # 6	7 # 6			SLAB BEAM

1- VERIFY ELEVATIONS, SIZES, ETC. WITH ARCHITECTURAL DRAWINGS PRIOR TO ANY WORK.

2- DROP BOTTOM OF BEAMS TO THE TOP OF OPENING (IF REQUIRED) ADD 2 # 5 FOR EVERY 8" OF DROP. (2" FROM TOP OF OPENING)

GEN. CONTR. TO VERIFY BEAMS ELEV. WITH ARCHITECTURAL DRAWINGS PRIOR TO ANY WORK. REPORT DISCREPANCIES FOR ACTION.

DRAWN BY: SL
12-10-06
REVISIONS:
1 2-08-07 BLDG. DEPT. COMMENT

3D DESIGN INC
ANTHONY LEON
AR0006752
ARCHITECTURE
4300 BISCAYNE BLVD. SUITE#604 MIAMI, FL 33137 T.305 438 9377 F.305 438 9378

SEAL

NEW BLDG. FOR
1529 JEFFERSON AVE.
MIAMI BEACH , FL
33139

RECEIVED JUN 1 2 2008

Sam Lyubkin, P.E.
Consulting Engineer
Forum Building 2632 Hollywood Boulevard
Suite 103 Hollywood, Florida 33020
(954) 922-8845
P.E. #34306

TO THE BEST OF THE ENGINEER'S KNOWLEDGE, THE PLANS AND SPECIFICATIONS BY THE ENGINEER FOR THIS BUILDING COMPLY WITH THE MINIMUM APPLICABLE BUILDING CODES

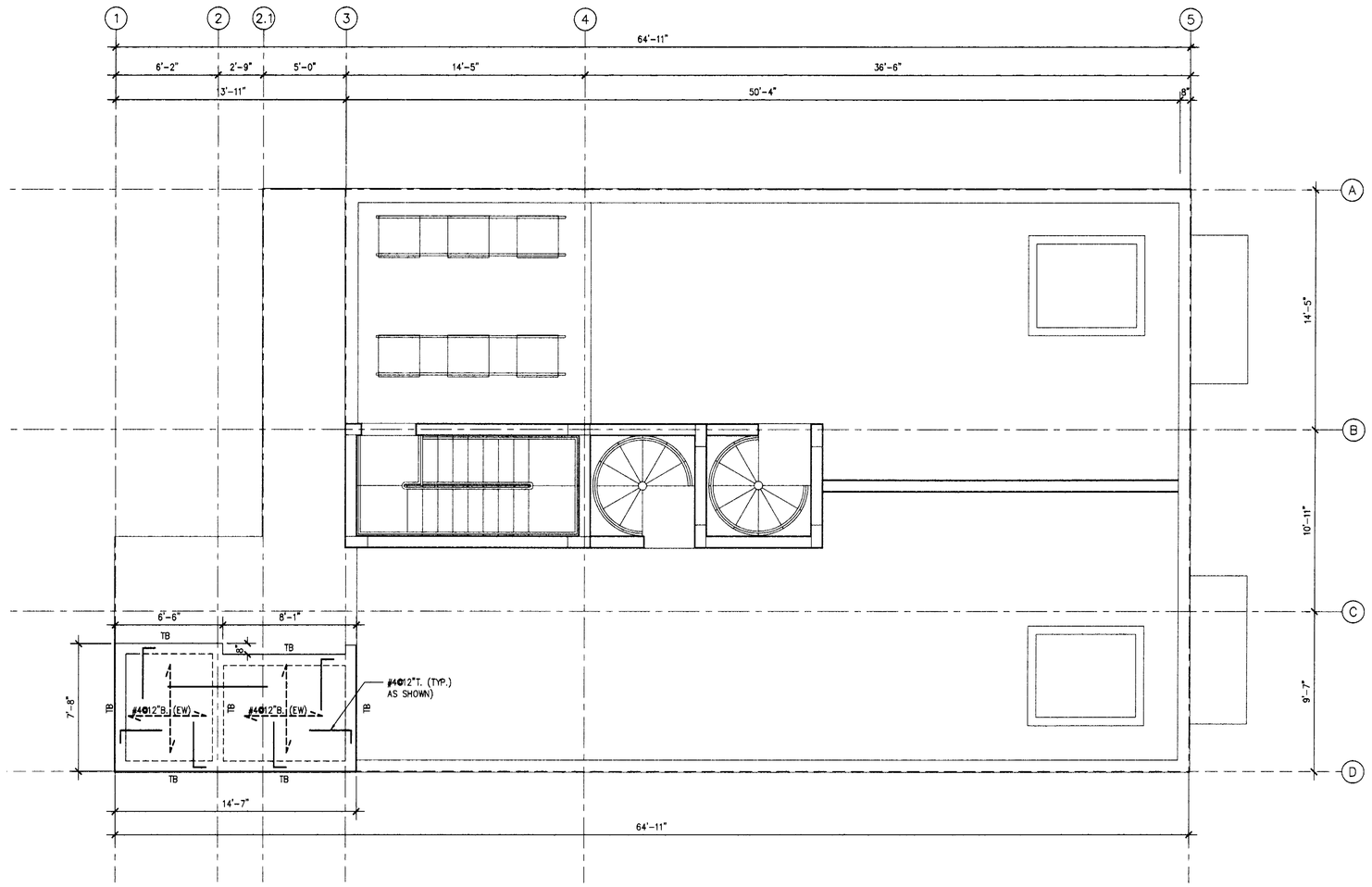

ROOF FRAMING PLAN

SCALE: 1/4" = 1'-0"

NOTE:

1- VERIFY DIMENSIONS, ELEVATIONS, STEPS, SLOPES, ETC. WITH ARCHITECTURAL DRAWINGS PRIOR TO ANY WORK.

2- SLAB TO BE 6" THICK (f'c=5 KSI) U.O. NOTED

3- DESIGN LOADS: LL= 30 P.S.F.
ADDITIONAL DL= 25 P.S.F.

BEAM SCHEDULE

MARK	TOP OF BM. ELEV.	SIZE W.	SIZE D.	LONGITUDINAL REINF. TOP	LONGITUDINAL REINF. BOTTOM	STIRRUPS SIZE	STIRRUPS SPACING	REMARKS
TB	TOP of SLAB	8"	12"	2 # 5	2 # 5	# 3	48"	
B-1	TOP of SLAB	8"	24"	2 # 6	2 # 6	# 3	8"	2 # 6 @ 1/2 DEPTH
B-2	TOP of SLAB	8"	34"+-	2 # 6	2 # 6	# 3	12"	2 # 6 @ 1/3 DEPTH
B-3	TOP of SLAB	12"	16"	3 # 6	3 # 6	# 3	6"	
B-4	TOP of SLAB	8"	16"	2 # 6	2 # 6	# 3	6"	
RB-1	TOP of SLAB	8"	24"	2 # 6	2 # 6	# 3	8"	2 # 6 @ 1/2 DEPTH
RB-2	TOP of SLAB	8"	42"+-	2 # 6	2 # 6	# 3	12"	2 # 6 @ 1/3 DEPTH
SLB-1	TOP of SLAB	36"	8"	7 # 6	7 # 6			SLAB BEAM

1- VERIFY ELEVATIONS, SIZES, ETC. WITH ARCHITECTURAL DRAWINGS PRIOR TO ANY WORK.

2- DROP BOTTOM OF BEAMS TO THE TOP OF OPENING (IF REQUIRED) ADD 2 # 5 FOR EVERY 8" OF DROP. (2" FROM TOP OF OPENING)

GEN. CONTR. TO VERIFY BEAMS ELEV. WITH ARCHITECTURAL DRAWINGS PRIOR TO ANY WORK. REPORT DISCREPANCIES FOR ACTION.

DRAWN BY:

REVISIONS:
1 08-07-06

2DESIGN INC.
ANTHONY LEON
AR0004752
ARCHITECTURE
4300 BISCAYNE BLVD. SUITE 604 MIAMI, FL 33137 T.305.438.9377 F.305.438.9378

SEAL

NEW BLDG.
FOR
1529 JEFFERSON AVE.
MIAMI BEACH, FL
33139

CITY OF MIAMI BEACH
VOID

Sam Lyubkin, P.E.
Consulting Engineer
Forum Building 2632 Hollywood Boulevard
Suite 103 Hollywood, Florida 33020
(954) 922-8845
P.E. #34306

TO THE BEST OF THE ENGINEER'S KNOWLEDGE, THE PLANS AND SPECIFICATIONS BY THE ENGINEER FOR THIS BUILDING COMPLY WITH THE MINIMUM APPLICABLE BUILDING CODES

Date 12/13/06

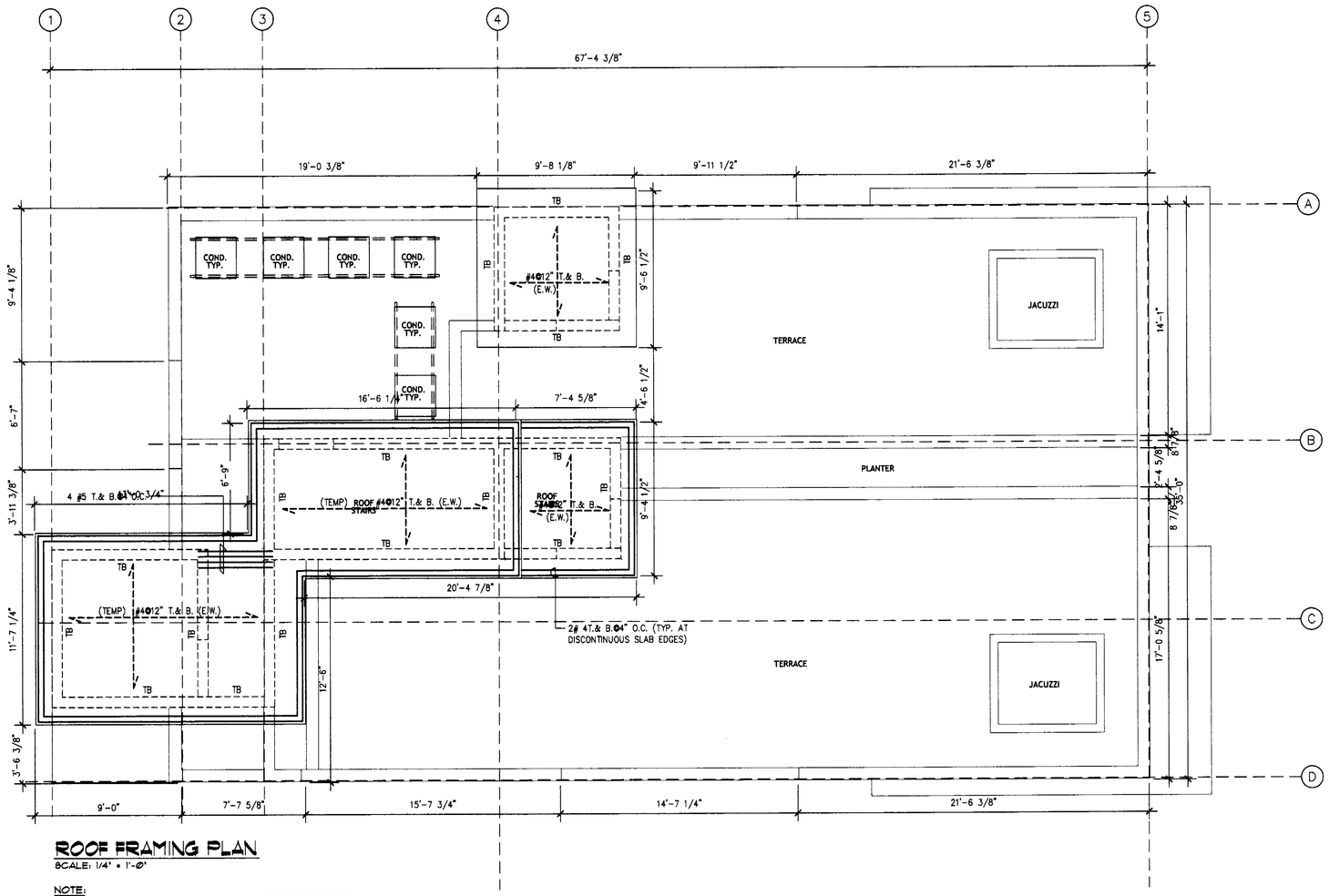

ROOF FRAMING PLAN

SCALE: 1/4" = 1'-0"

NOTE:

1- VERIFY DIMENSIONS, ELEVATIONS, STEPS, SLOPES, ETC. WITH ARCHITECTURAL DRAWINGS PRIOR TO ANY WORK.

2- SLAB TO BE 6" THICK (fc=5 KSI) U.O. NOTED

3- DESIGN LOADS: LL= 30 P.S.F.
ADDITIONAL DL= 25 P.S.F.

BEAM SCHEDULE

MARK	TOP OF BM. ELEV.	SIZE		LONGITUDINAL REINF.		STIRRUPS		REMARKS
		W.	D.	TOP	BOTTOM	SIZE	SPACING	
TB	TOP of SLAB	8"	12"	2 # 5	2 # 5	# 3	48"	
B-1	TOP of SLAB	8"	12"+	2 # 5	2 # 5	# 3	4 1/2"	
B-2	TOP of SLAB	8"	32"+-	2 # 6	2 # 6	# 3	12"	2 # 6 @ 1/2 DEPTH
RB-1	TOP of SLAB	8"	40"+-	2 # 6	2 # 6	# 3	12"	2 # 6 @ 1/3 DEPTH
SLB-1	TOP of SLAB	24"	9"	6 # 6	6 # 6			SLAB BEAM
SLB-2	TOP of SLAB	42"	9"	11 # 7	11 # 7	# 3	8@4" EA. SIDE OF SUPPORT	

1- VERIFY ELEVATIONS, SIZES, ETC. WITH ARCHITECTURAL DRAWINGS PRIOR TO ANY WORK.

2- DROP BOTTOM OF BEAMS TO THE TOP OF OPENING (IF REQUIRED) ADD 2 # 5 FOR EVERY 8" OF DROP. (2" FROM TOP OF OPENING)

GEN. CONTR. TO VERIFY BEAMS ELEV. WITH ARCHITECTURAL DRAWINGS PRIOR TO ANY WORK. REPORT DISCREPANCIES FOR ACTION.

DRAWN BY:

REVISIONS:

2DESIGN INC
ANTHONY LEON
AR0006722
ARCHITECTURE
4300 BISCAYNE BLVD. SUITE 604 MIAMI, FL 33137 T.305.438.9377 F.305.438.9378

SEAL

NEW BLDG. FOR
1529 JEFFERSON AVE.
MIAMI BEACH, FL
33139

OFFICE COPY
CITY OF MIAMI BEACH
APPROVED
THIS
BUILDING
ZONING
ORB/HPB
COMMERCIAL
PLUMBING
ELECTRICAL
MECHANICAL
FIRE PREVENTION
ENGINEERING
PUBLIC WORKS
STRUCTURAL
ACCESSIBILITY
ELEVATOR
As per Floor
REVIEW

Sam Lyubkin, P.E.
Consulting Engineer
Forum Building 2632 Hollywood Boulevard
Suite 103 Hollywood, Florida 33020
(954) 922-8845
P.E. #34306

TO THE BEST OF THE ENGINEER'S KNOWLEDGE, THE PLANS AND SPECIFICATIONS BY THE ENGINEER FOR THIS BUILDING COMPLY WITH THE MINIMUM APPLICABLE BUILDING CODES

6-20-06

S-6
OF 8

STRUCTURAL NOTES:

STRUCTURAL DESIGN SHALL CONFORM WITH ALL LOCAL & FEDERAL ORDINANCES AND BUILDING CODES (FLORIDA BUILDING CODE 2004)

DRAWING DIMENSION & COORDINATION:

DIMENSIONAL INFORMATION SHALL BE BASED ON THE ENTIRE SET OF CONTRACT DOCUMENTS IN TOTAL COORDINATE ALL THE REQUIREMENTS OF CIVIL, ARCHITECTURAL STRUCTURAL, MECHANICAL, ELECTRICAL, AND INTERIOR DESIGN DRAWINGS TO SUPLEMENT CONTRACT DOCUMENTS WHERE NECESSARY.

REPORT ANY DISCREPANCIES TO THE ARCHITECT PRIOR TO PROCEEDING.

WHERE CRITICAL DIMENSIONS CANNOT BE DETERMINED FROM THE PLANS, OR WHERE NEW WORK ADJOINS EXISTING CONSTRUCTION, OR WHERE ONE MATERIAL ADJOINS A PREVIOSLY PLACED MATERIAL WITH A MORE RESTRICTIVE TOLERANCE THAN THE IN-PLACE MATERIAL, CONTRACTOR SHALL TAKE FIELD MEASUREMENTS AS REQUIRED TO COMPLETE SHOP DRAWINGS AND INSTALLATION. REPORT ANY DISCREPANCIES EXCEEDING 3% BETWEEN FIELD MEASURED DIMENSION AND SCALED DRAWING DIMENSIONS TO ARCHITECT BEFORE PROCEEDING WITH THE WORK.

WHERE A LINE OF STRUCTURE, OPENING LOCATION, OR DIMENSION IS CRITICAL, AND BASED ON THE REQUIREMENTS OF ANOTHER TRADE OR SUBCONTRACTOR; THAT SUBCONTRACTOR SHALL SUBMIT A SHOP DRAWING WITH THE REQUIRED DIMENSIONAL INFORMATION UPON WHICH THE CONTRACTOR SHALL BASE THE LAYOUT AND CONSTRUCTION. THIS PROCEDURE IS MANDATORY FOR CURTAIN WALL SYSTEMS AND ALL MECHANICAL AND ELECTRICAL OPENINGS.

CONTRACTOR TO VERIFY ALL DIMENSIONS BEFORE PROCEEDING WITH THE WORK, AND REPORT ANY DISCREPANCIES TO THE ARCHITECT AND ENGINEER FOR APPROPIATE ACTION.

CAST IN PLACE CONCRETE:

TO BE MIXED AND PLACED IN ACCORANCE WITH ACI 301. ALL REINFORCING CONCRETE TO HAVE 28 DAY COMPRESSIVE STRENGTH OF [F'c=5000 PSI (W/C=0.4)] CONTRACTOR SHALL SUBMIT ALL CONCRETE MIX DESING FOR REVIEW. CONCRETE MIX SUBMITTAL SHALL COMPLY WITH SECTION 4.3 OF A.C.I. 318 AND MUST SHOW STRENGTH DATA AT 7, 14 AND 28 DAYS. STANDARD DEVIATION AND MODULOS OF ELASTICITY. CONCRETE COMPRESSION TESTING TO COMPLY WITH LOCAL BUILDING CODES. PROVIDE CONCRETE INSERTS AS PER ARCHITECT OR MECHANICAL ENGINEER'S REQUIREMENTS.

CONCRETE REINFORCEMENT:

WORK SHALL BE IN ACCORDANCE WITH ACI 301, ACI 318-99, CRSI "MANUAL OF STANDARD PRACTICE". BARS SHALL CONFORM TO ASTM SPECIFICATION AG 15(51), GRADE 60. WELDED WIRE FABRIC SHALL CONFORM TO ASTM A185.

CONCRETE COVER REQUIRED AS FOLLOWS:

* CAST AGAINST AND EXPOSED TO EARTH	3"
* FORMED, EXPOSED TO EARTH OR WEATHER	
# 6 AND LARGER	2"
# 5 AND SMALLER	2"
* SLABS AND WALLS, NO WEATHER EXPOSURE	
2 HR. FIRE RATING & LESS	1"
3 HR. FIRE RATING & MORE	1"

CONTRACTION JOINTS IN SLABS IN SLABS & BEAMS MAY OCCUR WITHIN THE MIDDLE 1/3 PORTION OF THE SPAN. CONTRACTION JOINTS SHALL BE KEYED WITH 1-1/2" KEY.

STRUCTURAL STEEL: (HD GALVANIZED)

ALL STRUCTURAL STEEL SHALL BE DEATILED, FABRICATED AND ERECTED ACCORDANCE WITH THE LATEST EDITION OF THE AMERICAN INSTITUTE OF STEEL CONSTRUCTION (AISC) "SPECIFICATION FOR THE DESIGN FABRICATION & ERECTION OF STRUCTURAL STEEL FOR BUILDINGS". STRUCTURAL STEEL TO BE DOMESTIC ORIGIN AND CONFORM TO:

ANGLES & PLATES	ASTM A36
PIPE	ASTM A53, GRADE B
TUBES	ASTM A500, GRADE B

ALL SHOP AND FIELD CONNECTIONS SHALL BE MADE WITH ASTM A325 HIGH STRENGTH BOLTS OR WELDING. BOLTING TO BE IN ACCORDANCE WITH RCRBSJ SPECIFICATIONS. ALL STEEL AT AND BELOW FINISHED GRADE TO BE FIELD PAINTED AND COVERED WITH A MINIMUM OF 2" CONCRETE. CONTRACTOR TO VERIFY STRUCTURAL STEEL FIRE PROOFING WITH ARCHITECTURAL DESING.

TESTING:

ALL TESTING SHALL BE MADE IN ACCORDANCE WITH THE F.B.C. 2001 RECOMENDATIONS,

GROUTING USED FOR SUPPORT OF BASE PLATES IS NON-SHRINK! GROUT 5000 P.S.I.

WELDING

ALL WELDING TO BE IN ACCORDANCE WITH THE AMERICAN WELDING SOCIETY (AWS) "STRUCTURAL WELDING CODE STEEL" D1.1 - AND AS INDICATED ON THE STRUCTURAL DRAWINGS. WELDING ELECTRODES, WELDING PROCESS, MINIMUM PREHEAT AND INTERPASS TEMPERATURES TO BE IN ACCORDANCE WITH "AWS" SPECIFICATIONS. ANY STEEL DAMAGED IN WELDING TO BE REPLACED OR ACCEPTABLE REINFORCED. ALL WORK SHALL BE IN ACCORDANCE WITH ALL LOCAL AND NATIONAL BUILDING CODES AND GOVERNING REGULATIONS.

PRECAST CONCRETE LINTELS SHALL BE PROVIDE AT ALL MASONRY OPENINGS AS REQUIRED. WHERE NO MASONRY EXISTS FOR LINTEL BEARING, PROVIDE DOWELS FROM COLUMN AND POUR IN PLACE. SHELF ANGLES MAY BE USED IN LIEU OF CAST CONCRETE (4"x 4"x 3/8" WITH 2 3/4" DIA. ANCHOR BOLTS).

MAXIMUM SLAB OPENINGS:

THE EQUIVALENT OF STEEL INTERRUPTED BY OPENINGS TO BE ADDED TO SIDE AT MINIMUM SPACING (2" C/C). BARS SHALL EXTEND WITH A MINIMUM LAP OF 4-1/2" TIMES BAR NUMBER BEYOND OPENINGS.

ALL LUMBER SHALL BE MINIMUM CONSTRUCTION GRADE (1000 PSI) UNLESS OTHERWISE NOTED. ALL LUMBER IN DIRECT CONTACT WITH CONCRETE OR MASONRY SHALL BE TREATED WITH A RECONIZED WOOD PRESERVATIVE OR PROTECTED BY METAL PLATES OR OTHER APPROVED CONSTRUCTION MATERIAL.

FRAMING LUMBER SHALL BE #2 SOUTHERN YELLOW PINE F=1250 PSI UNLESS OTHERWISE NOTED.

FIREPROOFING SHALL BE IN ACCORDANCE WITH ALL LOCAL BUILDING CODES.

ALL NEW MASONRY CONSTRUCTIOM TO BE IN ACCORDANCE WITH "SPECIFICATION FOR CONCRETE MASONRY CONSTRUCTION" ACI 530. AND ALL LOCAL APPLICABLE BUILDING CODE PROVISIONS. (PROVIDE HORIZ. TRUSS REINFORCING @ 16" O.C. EMBED 4" INTO COLS.)

PROVIDE CORNER BAR AT ALL BEAM INTERSECTIONS AND CORNERS. CORNERS BARS SHALL BE SAME SIZE AND QUANTITY AS SCHEDULE BEAM REINFORCING EXTENDING 30" BOTH DIRECTIONS.

STRUCTURAL DESIGN CRITERIA:

THE DESIGN COMPLIES WITH THE REQUIREMENTS OF THE FLORIDA BUILDING CODE 2004, AND OTHER REFERENCED CODES AND SPECIFICATIONS SHALL BE LATEST EDITION AT THE TIME OF PERMIT.

WIND LOAD CRITERIA:

BASIC VELOCITY -- 146 MPH, AT A HEIGHT OF 30 FT. (F.B.C. 2004)
EXPOSURE CATEGORY: C
BUILDING CATEGORY: 2
IMPORTANCE FACTOR: 1.0
GCPI = +-0.18

DESIGN LOADS:

SEE PLAN FOR LOADING INFORMATION.

MASONRY WALLS:

1- HORIZONTAL REINFORCING:
PROVIDE STANDARD, TRUSS TYPE GA#9 HORIZONTAL JOINT REINFORCING EVERY 2nd BLOCK COURSE (1'-4" O.C. VERTICALLY) LAPPED 6". PROVIDE SPECIAL HORIZONTAL REINFORCING AT "T" AND "L" INTERSECTION. ANCHOR TO COLUMNS WITH MINIMUM 8" EXTENSION INTO AREA OF POUR.

2- CELL FILLING CONCRETE SHALL BE "PEA ROCK" CONCRETE MIX OR GROUT WITH f'c=5,000 PSI MIN. AT 28 DAYS. (9" SLUMP)

3- PROVIDE CORNER BAR AT ALL BEAM INTERSECTIONS AND CORNERS, CORNERS BARS SHALL BE SAME SIZE AND QUANTITY AS SCHEDULED BEAM REINFORCING EXTENDING 18" IN BOTH DIRECTIONS.

4- INSPECTION REQUIRED.

5- HOLLOW LOAD BEARING MASONRY UNITS SHALL CONFORM TO ASTM C-90, TYPE 1, GRADE N, SQUARE END, WITH A MINIMUM AVERAGE COMPRESSIVE STRENGTH ON NET AREA OF f'm=1500 PSI.

6- MORTAR SHALL CONFORM TO ASTM C-270, TYPE "M" WITH A 28 DAY STRENGTH OF 2,500 PSI.

7- LAY ALL MASONRY WITH FULL FACE HEAD JOINTS AND WITH FACE SHELL MORTAR BEDDING.

8- MASONRY ANCHORAGE TO SUPERSTRUCTURE SHALL BE PROVIDED IN ACCORDANCE WITH STRUCTURAL DRAWINGS AND DETAILS.

9- THE USE OF ADMIXTURES SHALL NOT BE PERMITTED WITHOUT PRIOR REVIEW OF THE ENGINEER.

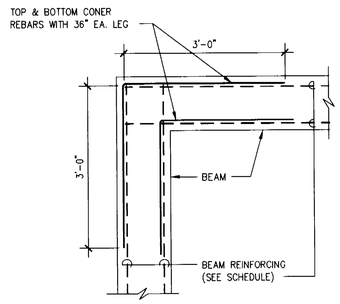

BEAM CORNER DETAIL
SCALE: 3/4" = 1'-0"

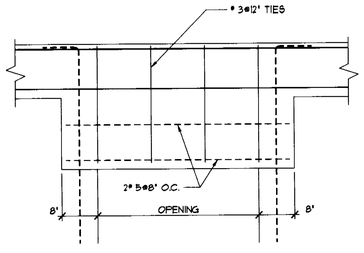

DROP BEAM DIAGRAM
SCALE: 3/4" = 1'-0"

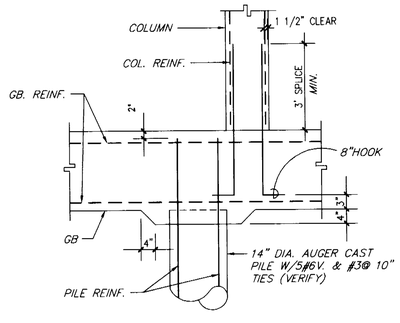

TYP. PILE-GRADE BM. & GR. BEAM-COL. DETAIL
N.T.S.

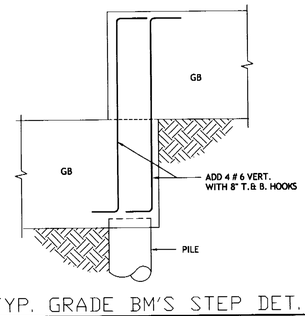

TYP. GRADE BM'S STEP DET.
SCALE: 1/2" = 1'-0"

1- APPLY AS APPLICABLE
2- GRADE BEAM REINFORCING NOT SHOWN FOR CLARITY

GENERAL BEAM SCHEDULE NOTES

1. SCHEDULED HOOPS OR STIRRUPS SHALL BE PLACED AT EACH END OF BEAM UNLESS NOTED OTHERWISE. STIRRUPS SHALL BE TYPE S-6.1 HOOPS SHALL BE TYPE T-2 CRSI BAR BENDS UNLESS NOTED OTHERWISE
2. BUNDLE ALL STRUCTURAL BEAM TOP BARS IN PAIRS OVER SUPPORTS WITH TOP BARS FROM ADJACENT BEAMS. (UNO)
3. ALL CONCRETE BEAMS OTHER THAN THOSE WITH THE PREFIX TB SHALL BE POURED PRIOR TO PLACING OF BLOCK BELOW
4. ALL TIE BEAM REINFORCING SHALL BE CONTINUOUS THRU TIE BEAMS ONLY. ALL SPLICES TO BE A MINIMUM OF 30 BAR DIAMETERS.
5. ALL TIE BEAM TOP & BOTTOM REINFORCING SHALL EXTEND INTO SPAN OF ANY ADJACENT STRUCTURAL BEAM AS PER BENDING DIAGRAM.
6. DROP BOTTOM OF TIE BEAMS AS REQUIRED AT WINDOW AND DOOR HEADS (28" MAXIMUM) AND ADD 2 #5 BOTTOM IF DROP EXCEEDS 8'.
7. TIE BEAM SCHEDULED DEPTHS ARE MINIMUM AND MAY BE INCREASED (8" MAXIMUM) TO FIT BLOCK WORK.
8. ALL ADDED LONGITUDINAL BEAM REINFORCING SHALL EXTEND 6' MINIMUM INTO SUPPORT UNLESS NOTED OTHERWISE.
9. MARK 'C' IN REINFORCING COLUMN BETWEEN TWO BEAMS INDICATES THAT REINFORCING SHALL BE CONTINUOUS THRU THESE TWO BEAMS.
10. ONE-QUARTER OF MAXIMUM BOTTOM REINFORCING STEEL AREA OF EITHER ADJACENT BEAM SHALL EXTEND THRU SUPPORT AND LAP WITH A CLASS "A" TENSION LAP SPLICE ON EITHER SIDE OF SUPPORT.

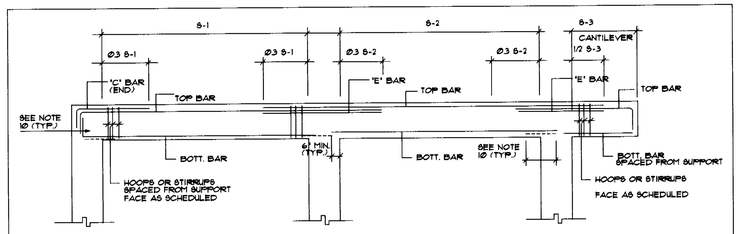

BOTTOM BARS - TOP BARS - "E" BARS BENDING DIAGRAM FOR CAST IN PLACE CONCRETE BEAMS & SLABS

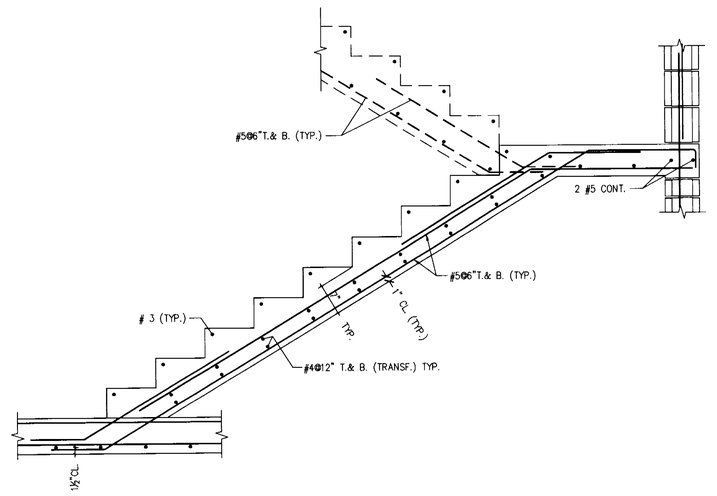

TYP. STAIR SECTION
SCALE: 3/4" = 1'-0"

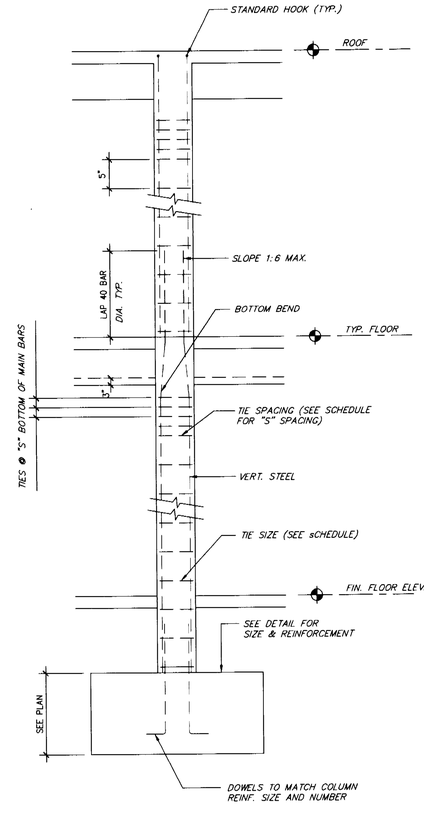

TYPICAL CONCRETE COLUMN DETAIL
N.T.S.

DRAWN BY:

REVISIONS:

3DESIGN INC
ANTHONY LEON ARCHITECTURE
4500 BISCAYNE BLVD. SUITE#G04 MIAMI, FL 33137 T.305.438.9377 F.305.438.9378

SEAL

NEW BLDG.
FOR
1529 JEFFERSON AVE.
MIAMI BEACH, FL
33139

JUN 1 3 2006

Sam Lyubkin, P.E.
Consulting Engineer
Forum Building 2632 Hollywood Boulevard
Suite 103 Hollywood, Florida 33020
(954) 922-8845
P.E. #34306

TO THE BEST OF THE ENGINEER'S KNOWLEDGE, THE PLANS AND SPECIFICATIONS BY THE ENGINEER FOR THIS BUILDING COMPLY WITH THE MINIMUM APPLICABLE BUILDING CODE

STRUCTURAL NOTES:

STRUCTURAL DESIGN SHALL CONFORM WITH ALL LOCAL & FEDERAL ORDINANCES AND BUILDING CODES (FLORIDA BUILDING CODE 2004)

DRAWING DIMENSION & COORDINATION:

DIMENSIONAL INFORMATION SHALL BE BASED ON THE ENTIRE SET OF CONTRACT DOCUMENTS IN TOTAL. COORDINATE ALL THE REQUIREMENTS OF CIVIL, ARCHITECTURAL STRUCTURAL, MECHANICAL, ELECTRICAL, AND INTERIOR DESIGN DRAWINGS TO SUPLEMENT CONTRACT DOCUMENTS WHERE NECESSARY.

REPORT ANY DISCREPANCIES TO THE ARCHITECT PRIOR TO PROCEEDING.

WHERE CRITICAL DIMENSIONS CANNOT BE DETERMINED FROM THE PLANS, OR WHERE NEW WORK ADJOINS EXISTING CONSTRUCTION, OR WHERE ONE MATERIAL ADJOINS A PREVIOSLY PLACED MATERIAL WITH A MORE RESTRICTIVE TOLERANCE THAN THE IN-PLACE MATERIAL CONTRACTOR SHALL TAKE FIELD MEASUREMENTS AS REQUIRED TO COMPLETE SHOP DRAWINGS AND INSTALLATION. REPORT ANY DISCREPANCIES EXCEEDING 3% BETWEEN FIELD MEASURED DIMENSION AND SCALED DRAWING DIMENSIONS TO ARCHITECT BEFORE PROCEEDING WITH THE WORK.

WHERE A LINE OF STRUCTURE, OPENING LOCATION, OR DIMENSION IS CRITICAL, AND BASED ON THE REQUIREMENTS OF ANOTHER TRADE OR SUBCONTRACTOR; THAT SUBCONTRACTOR SHALL SUBMIT A SHOP DRAWING WITH THE REQUIRED DIMENSIONAL INFORMATION UPON WHICH THE CONTRACTOR SHALL BASE THE LAYOUT AND CONSTRUCTION. THIS PROCEDURE IS MANDATORY FOR CURTAIN WALL SYSTEMS AND ALL MECHANICAL AND ELECTRICAL OPENINGS.

CONTRACTOR TO VERIFY ALL DIMENSIONS BEFORE PROCEEDING WITH THE WORK, AND REPORT ANY DISCREPANCIES TO THE ARCHITECT AND ENGINEER FOR APPROPIATE ACTION.

CAST IN PLACE CONCRETE:

TO BE MIXED AND PLACED IN ACCORANCE WITH ACI 301. ALL REINFORCING CONCRETE TO HAVE 28 DAY COMPRESSIVE STRENGTH OF [FL- 5000 PSI (W/C=0.4)] CONTRACTOR SHALL SUBMIT ALL CONCRETE MIX DESING FOR REVIEW. CONCRETE MIX SUBMITTAL SHALL COMPLY WITH SECTION 4.3 OF A.C.I. 318 AND MUST SHOW STRENGTH DATA AT 7, 14 AND 28 DAYS. STANDARD DEVIATION AND MODULOS OF ELASTICITY. CONCRETE COMPRESSION TESTING TO COMPLY WITH LOCAL BUILDING CODES. PROVIDE CONCRETE INSERTS AS PER ARCHITECT OR MECHANICAL ENGINEER'S REQUIREMENTS.

CONCRETE REINFORCEMENT:

WORK SHALL BE IN ACCORDANCE WITH ACI 301, ACI 318-99, CRSI "MANUAL OF STANDARD PRACTICE". BARS SHALL CONFORM TO ASTM SPECIFICATION AG 15(S1), GRADE 60. WELDED WIRE FABRIC SHALL CONFORM TO ASTM A185.

CONCRETE COVER REQUIRED AS FOLLOWS:

* CAST AGAINST AND EXPOSED TO EARTH	3"
* FORMED, EXPOSED TO EARTH OR WEATHER	
# 6 AND LARGER	2"
# 5 AND SMALLER	2"
* SLABS AND WALLS, NO WEATHER EXPOSURE	
2 HR. FIRE RATING & LESS	1"
3 HR. FIRE RATING & MORE	1"

CONTRACTION JOINTS IN SLABS IN SLABS & BEAMS MAY OCCUR WITHIN THE MIDDLE 1/3 PORTION OF THE SPAN. CONTRACTION JOINTS SHALL BE KEYED WITH 1-1/2" KEY.

STRUCTURAL STEEL: (HD GALVANIZED)

ALL STRUCTURAL STEEL SHALL BE DEATILED, FABRICATED AND ERECTED ACCORDANCE WITH THE LATEST EDITION OF THE AMERICAN INSTITUTE OF STEEL CONSTRUCTION (AISC) "SPECIFICATION FOR THE DESIGN FABRICATION & ERECTION OF STRUCTURAL STEEL FOR BUILDINGS". STRUCTURAL STEEL TO BE DOMESTIC ORIGIN AND CONFORM TO:

ANGLES & PLATES	ASTM A36
PIPE	ASTM A53, GRADE B
TUBES	ASTM A500, GRADE B

ALL SHOP AND FIELD CONNECTIONS SHALL BE MADE WITH ASTM A325 HIGH STRENGTH BOLTS OR WELDING. BOLTING TO BE IN ACCORDANCE WITH RCRBSJ SPECIFICATIONS. ALL STEEL AT AND BELOW FINISHED GRADE TO BE FIELD PAINTED AND COVERED WITH A MINIMUM OF 2" CONCRETE. CONTRACTOR TO VERIFY STRUCTURAL STEEL FIRE PROOFING WITH ARCHITECTURAL DESING.

TESTING:

ALL TESTING SHALL BE MADE IN ACCORDANCE WITH THE F.B.C. 2001 RECOMENDATIONS,

GROUTING USED FOR SUPPORT OF BASE PLATES IS NON-SHRINKI GROUT 5000 P.S.I.

WELDING

ALL WELDING TO BE IN ACCORDANCE WITH THE AMERICAN WELDING SOCIETY (AWS) "STRUCTURAL WELDING CODE STEEL" D1.1 - AND AS INDICATED ON THE STRUCTURAL DRAWINGS. WELDING ELECTRODES, WELDING PROCESS, MINIMUM PREHEAT AND INTERPASS TEMPERATURES TO BE IN ACCORDANCE WITH "AWS" SPECIFICATIONS. ANY STEEL DAMAGED IN WELDING TO BE REPLACED OR ACCEPTABLE REINFORCED. ALL WORK SHALL BE IN ACCORDANCE WITH ALL LOCAL AND NATIONAL BUILDING CODES AND GOVERNING REGULATIONS.

PRECAST CONCRETE LINTELS SHALL BE PROVIDE AT ALL MASONRY OPENINGS AS REQUIRED. WHERE NO MASONRY EXISTS FOR LINTEL BEARING, PROVIDE DOWELS FROM COLUMN AND POUR IN PLACE. SHELF ANGLES MAY BE USED IN LIEU OF CAST CONCRETE (4"x 4"x 3/8" WITH 2 3/4" DIA. ANCHOR BOLTS).

MAXIMUM SLAB OPENINGS:

THE EQUIVALENT OF STEEL INTERRUPTED BY OPENINGS TO BE ADDED TO SIDE AT MINIMUM SPACING (2" C/C). BARS SHALL EXTEND WITH A MINIMUM LAP OF 4-1/2" TIMES BAR NUMBER BEYOND OPENINGS.

ALL LUMBER SHALL BE MINIMUM CONSTRUCTION GRADE (1000 PSI) UNLESS OTHERWISE NOTED. ALL LUMBER IN DIRECT CONTACT WITH CONCRETE OR MASONRY SHALL BE TREATED WITH A RECONIZED WOOD PRESERVATIVE OR PROTECTED BY METAL PLATES OR OTHER APPROVED CONSTRUCTION MATERIAL.

FRAMING LUMBER SHALL BE #2 SOUTHERN YELLOW PINE F=1250 PSI UNLESS OTHERWISE NOTED.

FIREPROOFING SHALL BE IN ACCORDANCE WITH ALL LOCAL BUILDING CODES.

ALL NEW MASONRY CONSTRUCTIOM TO BE IN ACCORDANCE WITH "SPECIFICATION FOR CONCRETE MASONRY CONSTRUCTION" ACI 530. AND ALL LOCAL APPLICABLE BUILDING CODE PROVISIONS. (PROVIDE HORIZ. TRUSS REINFORCING @ 16" O.C. EMBED 4" INTO COLS.)

PROVIDE CORNER BAR AT ALL BEAM INTERSECTIONS AND CORNERS. CORNERS BARS SHALL BE SAME SIZE AND QUANTITY AS SCHEDULE BEAM REINFORCING EXTENDING 30" BOTH DIRECTIONS.

STRUCTURAL DESIGN CRITERIA:

THE DESIGN COMPLIES WITH THE REQUIREMENTS OF THE FLORIDA BUILDING CODE 2004, AND OTHER REFERENCED CODES AND SPECIFICATIONS SHALL BE LATEST EDITION AT THE TIME OF PERMIT.

WIND LOAD CRITERIA:

BASIC VELOCITY -- 146 MPH, AT A HEIGHT OF 30 FT. (F.B.C. 2004)
EXPOSURE CATEGORY: C
BUILDING CATEGORY: 2
IMPORTANCE FACTOR: 1.0
GCPI = +-0.18

DESIGN LOADS:

SEE PLAN FOR LOADING INFORMATION.

MASONRY WALLS:

1- HORIZONTAL REINFORCING:
PROVIDE STANDARD, TRUSS TYPE GA#9 HORIZONTAL JOINT REINFORCING EVERY 2nd BLOCK COURSE (1'-4" O.C. VERTICALLY) LAPPED 6", PROVIDE SPECIAL HORIZONTAL REINFORCING AT "T" AND "L" INTERSECTION. ANCHOR TO COLUMNS WITH MINIMUM 8" EXTENSION INTO AREA OF POUR.

2- CELL FILLING CONCRETE SHALL BE "PEA ROCK" CONCRETE MIX OR GROUT WITH f'c=5,000 PSI MIN. AT 28 DAYS. (9" SLUMP)

3- PROVIDE CORNER BAR AT ALL BEAM INTERSECTIONS AND CORNERS, CORNERS BARS SHALL BE SAME SIZE AND QUANTITY AS SCHEDULED BEAM REINFORCING EXTENDING 18" IN BOTH DIRECTIONS.

4- INSPECTION REQUIRED.

5- HOLLOW LOAD BEARING MASONRY UNITS SHALL CONFORM TO ASTM C-90, TYPE 1, GRADE N, SQUARE END, WITH A MINIMUM AVERAGE COMPRESSIVE STRENGTH ON NET AREA OF f'm=1500 PSI.

6- MORTAR SHALL CONFORM TO ASTM C-270, TYPE "M" WITH A 28 DAY STRENGTH OF 2,500 PSI.

7- LAY ALL MASONRY WITH FULL FACE HEAD JOINTS AND WITH FACE SHELL MORTAR BEDDING.

8- MASONRY ANCHORAGE TO SUPERSTRUCTURE SHALL BE PROVIDED IN ACCORDANCE WITH STRUCTURAL DRAWINGS AND DETAILS.

9- THE USE OF ADMIXTURES SHALL NOT BE PERMITTED WITHOUT PRIOR REVIEW OF THE ENGINEER.

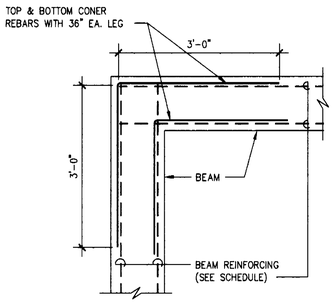

BEAM CORNER DETAIL
SCALE: 3/4" = 1'-0"

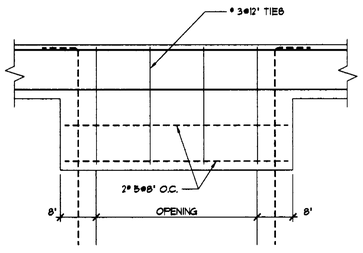

DROP BEAM DIAGRAM
SCALE: 3/4" = 1'-0"

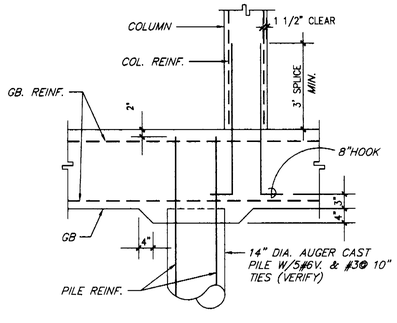

TYP. PILE-GRADE BM. & GR. BEAM-COL. DETAIL
N.T.S.

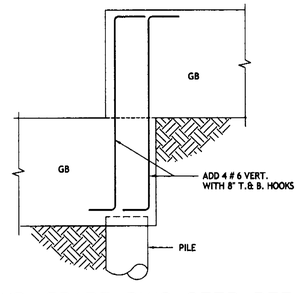

TYP. GRADE BM'S STEP DET.
SCALE: 1/2" = 1'-0"

1- APPLY AS APPLICABLE
2- GRADE BEAM REINFORCING NOT SHOWN FOR CLARITY

GENERAL BEAM SCHEDULE NOTES

1. SCHEDULED HOOPS OR STIRRUPS SHALL BE PLACED AT EACH END OF BEAM UNLESS NOTED OTHERWISE. STIRRUPS SHALL BE TYPE 6-6 & HOOPS SHALL BE TYPE 1-1 ORBY BAR BENDS UNLESS NOTED OTHERWISE.
2. BUNDLE ALL STRUCTURAL BEAM TOP BARS IN PAIRS OVER SUPPORTS WITH TOP BARS FROM ADJACENT BEAMS. (UNO.).
3. ALL CONCRETE BEAMS OTHER THAN THOSE WITH THE PREFIX TB SHALL BE POURED PRIOR TO PLACING OF BLOCK BELOW.
4. ALL TIE BEAM REINFORCING SHALL BE CONTINUOUS THRU TIE BEAMS ONLY. ALL SPLICES TO BE A MINIMUM OF 36" BAR DIAMETERS.
5. ALL TIE BEAM TOP & BOTTOM REINFORCING SHALL EXTEND INTO SPAN OF ANY ADJACENT STRUCTURAL BEAM AS PER BENDING DIAGRAM.
6. DROP BOTTOM OF TIE BEAMS AS REQUIRED AT WINDOW AND DOOR HEADS (36" MAXIMUM) AND ADD 2 % BOTTOM IF DROP EXCEEDS 8".
7. TIE BEAM SCHEDULED DEPTHS ARE MINIMUM AND MAY BE INCREASED (8" MAXIMUM) TO FIT BLOCK WORK.
8. ALL ADDED LONGITUDINAL BEAM REINFORCING SHALL EXTEND 6' MINIMUM INTO SUPPORT UNLESS NOTED OTHERWISE.
9. MARK "C" IN REINFORCING COLUMN BETWEEN TWO BEAMS INDICATES THAT REINFORCING SHALL BE CONTINUOUS THRU THESE TWO BEAMS.
10. ONE-QUARTER OF MAXIMUM BOTTOM REINFORCING STEEL AREA OF EITHER ADJACENT BEAM SHALL EXTEND THRU SUPPORT AND LAP WITH A CLASS "A" TENSION LAP SPLICE ON EITHER SIDE OF SUPPORT.

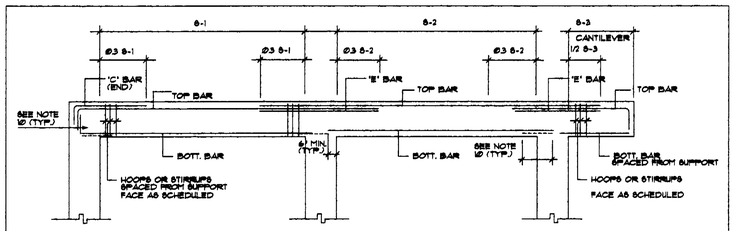

BOTTOM BARS - TOP BARS - "E" BARS
BENDING DIAGRAM FOR CAST IN PLACE
CONCRETE BEAMS & SLABS

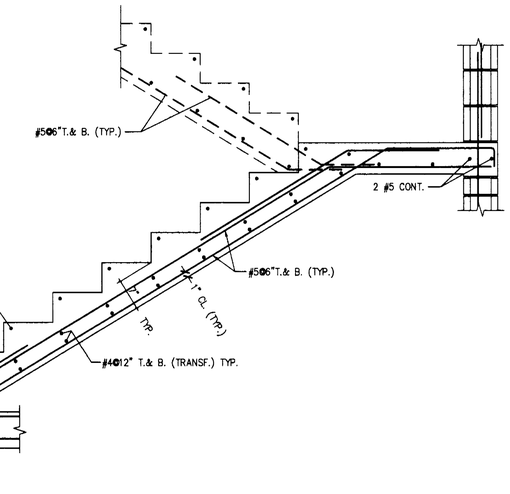

TYP. STAIR SECTION
SCALE: 3/4" = 1'-0"

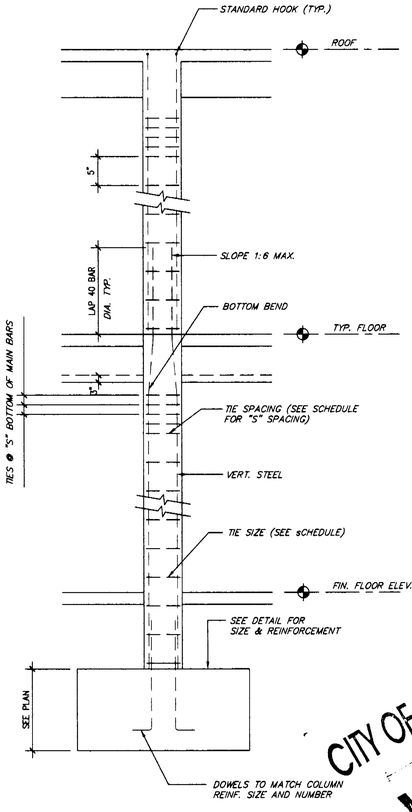

TYPICAL CONCRETE COLUMN DETAIL
N.T.S.

CITY OF MIAMI BEACH

DRAWN BY:

REVISIONS:

SEAL

NEW BLDG.
FOR
1529 JEFFERSON AVE.
MIAMI BEACH, FL
33139

2DESIGN INC
ANTHONY LEON
AR0016172
ARCHITECTURE
4300 BISCAYNE BLVD. SUITE#G04 MIAMI, FL 33137 T.305.438.9377 F.305.438.9378

Sam Lyubkin, P.E.
Consulting Engineer
Forum Building 2632 Hollywood Boulevard
Suite 103 Hollywood, Florida 33020
(954) 922-8845
P.E. #34306

TO THE BEST OF THE ENGINEER'S KNOWLEDGE, THE PLANS AND SPECIFICATIONS BY THE ENGINEER FOR THIS BUILDING COMPLY WITH THE MINIMUM APPLICABLE BUILDING CODES

12-13-06
Date

STRUCTURAL NOTES:

STRUCTURAL DESIGN SHALL CONFORM WITH ALL LOCAL & FEDERAL ORDINANCES AND BUILDING CODES (FLORIDA BUILDING CODE 2004)

DRAWING DIMENSION & COORDINATION:

DIMENSIONAL INFORMATION SHALL BE BASED ON THE ENTIRE SET OF CONTRACT DOCUMENTS IN TOTAL. COORDINATE ALL THE REQUIREMENTS OF CIVIL, ARCHITECTURAL STRUCTURAL, MECHANICAL, ELECTRICAL, AND INTERIOR DESIGN DRAWINGS TO SUPLEMENT CONTRACT DOCUMENTS WHERE NECESSARY.

REPORT ANY DISCREPANCIES TO THE ARCHITECT PRIOR TO PROCEEDING.

WHERE CRITICAL DIMENSIONS CANNOT BE DETERMINED FROM THE PLANS, OR WHERE NEW WORK ADJOINS EXISTING CONSTRUCTION, OR WHERE ONE MATERIAL ADJOINS A PREVIOSLY PLACED MATERIAL WITH A MORE RESTRICTIVE TOLERANCE THAN THE IN-PLACE MATERIAL. CONTRACTOR SHALL TAKE FIELD MEASUREMENTS AS REQUIRED TO COMPLETE SHOP DRAWINGS AND INSTALLATION. REPORT ANY DISCREPANCIES EXCEEDING 3% BETWEEN FIELD MEASURED DIMENSION AND SCALED DRAWING DIMENSIONS TO ARCHITECT BEFORE PROCEEDING WITH THE WORK.

WHERE A LINE OF STRUCTURE, OPENING LOCATION, OR DIMENSION IS CRITICAL, AND BASED ON THE REQUIREMENTS OF ANOTHER TRADE OR SUBCONTRACTOR; THAT SUBCONTRACTOR SHALL SUBMIT A SHOP DRAWING WITH THE REQUIRED DIMENSIONAL INFORMATION UPON WHICH THE CONTRACTOR SHALL BASE THE LAYOUT AND CONSTRUCTION. THIS PROCEDURE IS MANDATORY FOR CURTAIN WALL SYSTEMS AND ALL MECHANICAL AND ELECTRICAL OPENINGS.

CONTRACTOR TO VERIFY ALL DIMENSIONS BEFORE PROCEEDING WITH THE WORK, AND REPORT ANY DISCREPANCIES TO THE ARCHITECT AND ENGINEER FOR APPROPIATE ACTION.

CAST IN PLACE CONCRETE:

TO BE MIXED AND PLACED IN ACCORANCE WITH ACI 301. ALL REINFORCING CONCRETE TO HAVE 28 DAY COMPRESSIVE STRENGTH OF f'c=5000 PSI (W/C=0.4) CONTRACTOR SHALL SUBMIT ALL CONCRETE MIX DESING FOR REVIEW. CONCRETE MIX SUBMITTAL SHALL COMPLY WITH SECTION 4.3 OF A.C.I. 318 AND MUST SHOW STRENGTH DATA AT 7, 14 AND 28 DAYS. STANDARD DEVIATION AND MODULUS OF ELASTICITY. CONCRETE COMPRESSION TESTING TO COMPLY WITH LOCAL BUILDING CODES. PROVIDE CONCRETE INSERTS AS PER ARCHITECT OR MECHANICAL ENGINEER'S REQUIREMENTS.

CONCRETE REINFORCEMENT:

WORK SHALL BE IN ACCORDANCE WITH ACI 301, ACI 318-99, CRSI "MANUAL OF STANDARD PRACTICE". BARS SHALL CONFORM TO ASTM SPECIFICATION AG 15(51), GRADE 60. WELDED WIRE FABRIC SHALL CONFORM TO ASTM A185.

CONCRETE COVER REQUIRED AS FOLLOWS:

* CAST AGAINST AND EXPOSED TO EARTH	3"
* FORMED, EXPOSED TO EARTH OR WEATHER	
# 6 AND LARGER	2"
# 5 AND SMALLER	2"
* SLABS AND WALLS, NO WEATHER EXPOSURE	
2 HR. FIRE RATING & LESS	1"
3 HR. FIRE RATING & MORE	1"

CONTRACTION JOINTS IN SLABS IN SLABS & BEAMS MAY OCCUR WITHIN THE MIDDLE 1/3 PORTION OF THE SPAN. CONTRACTION JOINTS SHALL BE KEYED WITH 1-1/2" KEY.

STRUCTURAL STEEL:

ALL STRUCTURAL STEEL SHALL BE DEATILED, FABRICATED AND ERECTED ACCORDANCE WITH THE LATEST EDITION OF THE AMERICAN INSTITUTE OF STEEL CONSTRUCTION (AISC) "SPECIFICATION FOR THE DESIGN FABRICATION & ERECTION OF STRUCTURAL STEEL FOR BUILDINGS". STRUCTURAL STEEL TO BE DOMESTIC ORIGIN AND CONFORM TO:

ANGLES & PLATES	ASTM A36
PIPE	ASTM A53, GRADE B
TUBES	ASTM A500, GRADE B

ALL SHOP AND FIELD CONNECTIONS SHALL BE MADE WITH ASTM A325 HIGH STRENGTH BOLTS OR WELDING. BOLTING TO BE IN ACCORDANCE WITH RCRBSJ SPECIFICATIONS. ALL STEEL AT AND BELOW FINISHED GRADE TO BE FIELD PAINTED AND COVERED WITH A MINIMUM OF 2" CONCRETE. CONTRACTOR TO VERIFY STRUCTURAL STEEL FIRE PROOFING WITH ARCHITECTURAL DESING.

TESTING:

ALL TESTING SHALL BE MADE IN ACCORDANCE WITH THE F.B.C. 2001 RECOMENDATIONS,

GROUTING USED FOR SUPPORT OF BASE PLATES IS NON-SHRINKI GROUT 5000 P.S.I.

WELDING

ALL WELDING TO BE IN ACCORDANCE WITH THE AMERICAN WELDING SOCIETY (AWS) "STRUCTURAL WELDING CODE STEEL" D1.1 - AND AS INDICATED ON THE STRUCTURAL DRAWINGS. WELDING ELECTRODES. WELDING PROCESS, MINIMUM PREHEAT AND INTERPASS TEMPERATURES TO BE IN ACCORDANCE WITH "AWS" SPECIFICATIONS. ANY STEEL DAMAGED IN WELDING TO BE REPLACED OR ACCEPTABLE REINFORCED. ALL WORK SHALL BE IN ACCORDANCE WITH ALL LOCAL AND NATIONAL BUILDING CODES AND GOVERNING REGULATIONS.

PRECAST CONCRETE LINTELS SHALL BE PROVIDE AT ALL MASONRY OPENINGS AS REQUIRED. WHERE NO MASONRY EXISTS FOR LINTEL BEARING, PROVIDE DOWELS FROM COLUMN AND POUR IN PLACE. SHELF ANGLES MAY BE USED IN LIEU OF CAST CONCRETE (4"x 4"x 3/8" WITH 2 3/4" DIA. ANCHOR BOLTS).

MAXIMUM SLAB OPENINGS:

THE EQUIVALENT OF STEEL INTERRUPTED BY OPENINGS TO BE ADDED TO SIDE AT MINIMUM SPACING (2" C/C). BARS SHALL EXTEND WITH A MINIMUM LAP OF 4-1/2" TIMES BAR NUMBER BEYOND OPENINGS.

ALL LUMBER SHALL BE MINIMUM CONSTRUCTION GRADE (1000 PSI) UNLESS OTHERWISE NOTED. ALL LUMBER IN DIRECT CONTACT WITH CONCRETE OR MASONRY SHALL BE TREATED WITH A RECONIZED WOOD PRESERVATIVE OR PROTECTED BY METAL PLATES OR OTHER APPROVED CONSTRUCTION MATERIAL.

FRAMING LUMBER SHALL BE #2 SOUTHERN YELLOW PINE F=1250 PSI UNLESS OTHERWISE NOTED.

FIREPROOFING SHALL BE IN ACCORDANCE WITH ALL LOCAL BUILDING CODES.

ALL NEW MASONRY CONSTRUCTIOM TO BE IN ACCORDANCE WITH "SPECIFICATION FOR CONCRETE MASONRY CONSTRUCTION" ACI 530. AND ALL LOCAL APPLICABLE BUILDING CODE PROVISIONS. (PROVIDE HORIZ. TRUSS REINFORCING @ 16" O.C. EMBED 4" INTO COLS.)

PROVIDE CORNER BAR AT ALL BEAM INTERSECTIONS AND CORNERS. CORNERS BARS SHALL BE SAME SIZE AND QUANTITY AS SCHEDULE BEAM REINFORCING EXTENDING 30" BOTH DIRECTIONS.

STRUCTURAL DESIGN CRITERIA:

THE DESIGN COMPLIES WITH THE REQUIREMENTS OF THE FLORIDA BUILDING CODE 2004, AND OTHER REFERENCED CODES AND SPECIFICATIONS SHALL BE LATEST EDITION AT THE TIME OF PERMIT.

WIND LOAD CRITERIA:

BASIC VELOCITY -- 146 MPH, AT A HEIGHT OF 30 FT. (F.B.C. 2004)
EXPOSURE CATEGORY: C
BUILDING CATEGORY: 2
IMPORTANCE FACTOR: 1.0
GCPI = +-0.18

DESIGN LOADS:

SEE PLAN FOR LOADING INFORMATION.

MASONRY WALLS:

1- HORIZONTAL REINFORCING:
PROVIDE STANDARD, TRUSS TYPE GA#9 HORIZONTAL JOINT REINFORCING EVERY 2nd BLOCK COURSE (1'-4" O.C. VERTICALLY) LAPPED 6". PROVIDE SPECIAL HORIZONTAL REINFORCING AT "T" AND "L" INTERSECTION. ANCHOR TO COLUMNS WITH MINIMUM 8" EXTENSION INTO AREA OF POUR.

2- CELL FILLING CONCRETE SHALL BE "PEA ROCK" CONCRETE MIX OR GROUT WITH f'c=5,000 PSI MIN. AT 28 DAYS. (9" SLUMP)

3- PROVIDE CORNER BAR AT ALL BEAM INTERSECTIONS AND CORNERS, CORNERS BARS SHALL BE SAME SIZE AND QUANTITY AS SCHEDULED BEAM REINFORCING EXTENDING 18" IN BOTH DIRECTIONS.

4- INSPECTION REQUIRED.

5- HOLLOW LOAD BEARING MASONRY UNITS SHALL CONFORM TO ASTM C-90, TYPE 1, GRADE N, SQUARE END, WITH A MINIMUM AVERAGE COMPRESSIVE STRENGTH ON NET AREA OF f'm=1500 PSI.

6- MORTAR SHALL CONFORM TO ASTM C-270, TYPE "M" WITH A 28 DAY STRENGTH OF 2,500 PSI.

7- LAY ALL MASONRY WITH FULL FACE HEAD JOINTS AND WITH FACE SHELL MORTAR BEDDING.

8- MASONRY ANCHORAGE TO SUPERSTRUCTURE SHALL BE PROVIDED IN ACCORDANCE WITH STRUCTURAL DRAWINGS AND DETAILS.

9- THE USE OF ADMIXTURES SHALL NOT BE PERMITTED WITHOUT PRIOR REVIEW OF THE ENGINEER.

GENERAL BEAM SCHEDULE NOTES

1. SCHEDULED HOOPS OR STIRRUPS SHALL BE PLACED AT EACH END OF BEAM UNLESS NOTED OTHERWISE. STIRRUPS SHALL BE TYPE S-4. HOOPS SHALL BE TYPE 1-2 CRSI BAR BENDS UNLESS NOTED OTHERWISE
2. BUNDLE ALL STRUCTURAL BEAM TOP BARS IN PAIRS OVER SUPPORTS WITH TOP BARS FROM ADJACENT BEAMS. (UNO)
3. ALL CONCRETE BEAMS OTHER THAN THOSE WITH THE PREFIX TB SHALL BE POURED PRIOR TO PLACING OF BLOCK BELOW.
4. ALL TIE BEAM REINFORCING SHALL BE CONTINUOUS THRU TIE BEAMS ONLY. ALL SPLICES TO BE A MINIMUM OF 30 BAR DIAMETERS.
5. ALL TIE BEAM TOP & BOTTOM REINFORCING SHALL EXTEND INTO SPAN OF ANY ADJACENT STRUCTURAL BEAM AS PER BENDING DIAGRAM.
6. DROP BOTTOM OF TIE BEAMS AS REQUIRED AT WINDOW AND DOOR HEADS (28" MAXIMUM) AND ADD 2 #5 BOTTOM IF DROP EXCEEDS 8".
7. TIE BEAM SCHEDULED DEPTHS ARE MINIMUM AND MAY BE INCREASED (8" MAXIMUM) TO FIT BLOCK WORK.
8. ALL ADDED LONGITUDINAL BEAM REINFORCING SHALL EXTEND 6' MINIMUM INTO SUPPORT UNLESS NOTED OTHERWISE.
9. MARK 'X' IN REINFORCING COLUMN BETWEEN TWO BEAMS INDICATES THAT REINFORCING SHALL BE CONTINUOUS THRU THESE TWO BEAMS.
10. ONE-QUARTER OF MAXIMUM BOTTOM REINFORCING STEEL AREA OF EITHER ADJACENT BEAM SHALL EXTEND THRU SUPPORT AND LAP WITH A CLASS 'A' TENSION LAP SPLICE ON EITHER SIDE OF SUPPORT.

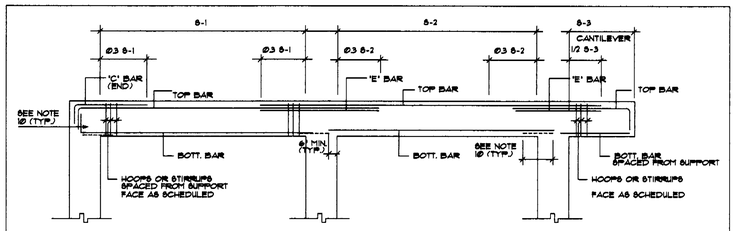

BOTTOM BARS - TOP BARS - "E" BARS BENDING DIAGRAM FOR CAST IN PLACE CONCRETE BEAMS & SLABS

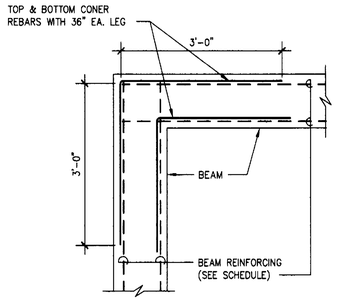

BEAM CORNER DETAIL
SCALE: 3/4" = 1'-0"

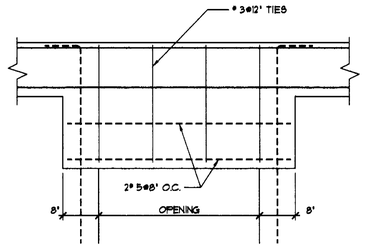

DROP BEAM DIAGRAM
SCALE: 3/4" = 1'-0"

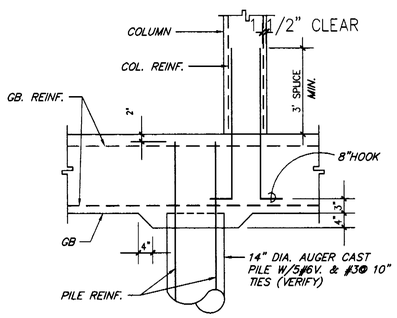

TYP. PILE-GRADE BM. & GR. BEAM-COL. DETAIL
N.T.S.

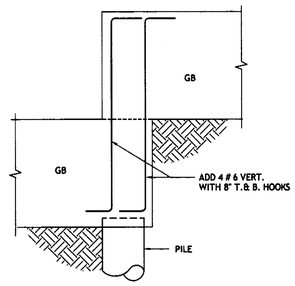

TYP. GRADE BM'S STEP DET.
SCALE: 1/2" = 1'-0"

1- APPLY AS APPLICABLE
2- GRADE BEAM REINFORCING NOT SHOWN FOR CLARITY

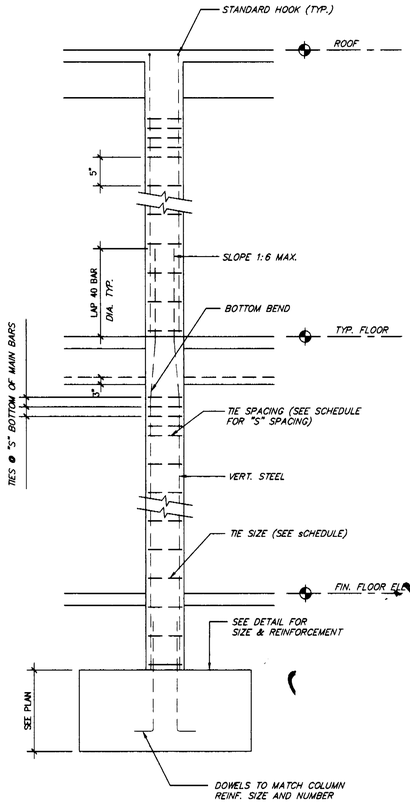

TYPICAL CONCRETE COLUMN DETAIL
N.T.S.

OFFICE COPY
CITY OF MIAMI BEACH
APPROVED FOR PERMIT BY THE FOLLOWING:
BUILDING:
ZONING:
DRB/HPB:
CONCURRENCY:
PLUMBING:
ELECTRICAL:
MECHANICAL:
FIRE PREVENTION:
ENGINEERING:
PUBLIC WORKS:
STRUCTURAL:
ACCESSIBILITY:
ELEVATOR:

Sam Lyubkin, P.E.
Consulting Engineer
Forum Building 2632 Hollywood Boulevard
Suite 103 Hollywood, Florida 33020
(954) 922-8845
P.E. #34306

TO THE BEST OF THE ENGINEER'S KNOWLEDGE, THE PLANS AND SPECIFICATIONS BY THE ENGINEER FOR THIS BUILDING COMPLY WITH THE MINIMUM APPLICABLE BUILDING CODES

3DESIGN INC
ANTHONY LEON
AR0016752
ARCHITECTURE
4300 BISCAYNE BLVD. SUITE#604 MIAMI, FL 33137 T.305.438.9377 F.305.438.9378

DRAWN BY:

REVISIONS:

SEAL

NEW BLDG. FOR
1529 JEFFERSON AVE.
MIAMI BEACH, FL
33139

S-7
OF 8

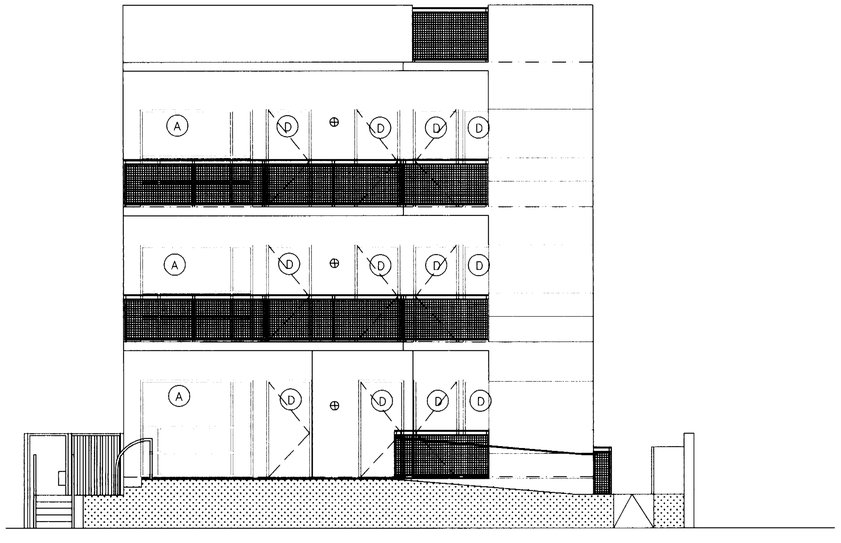

WEST ELEVATION
SCALE: 3/16" = 1'-0"

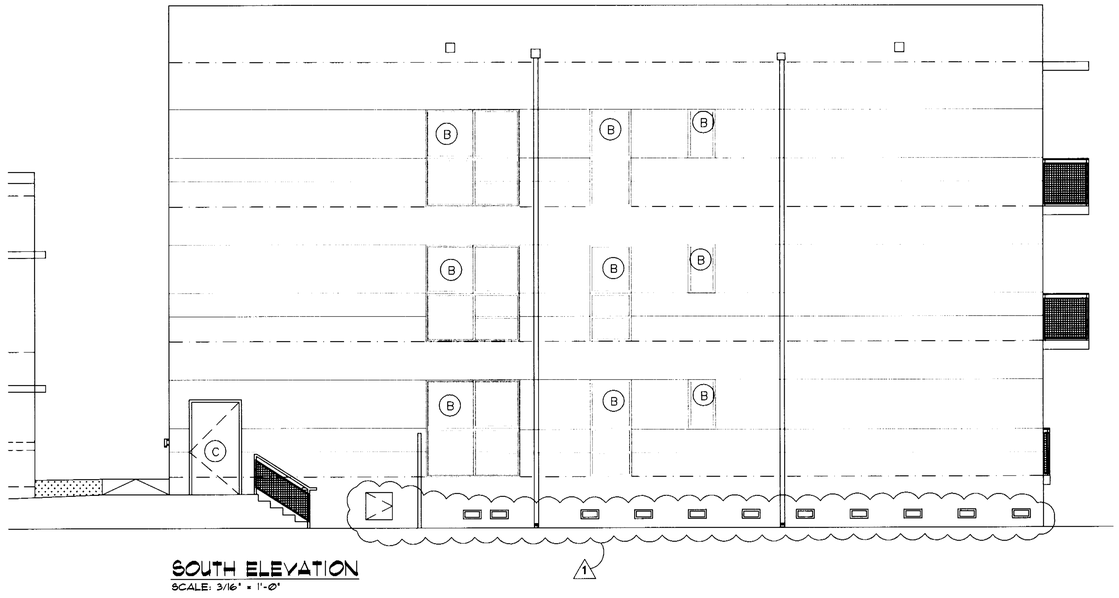

SOUTH ELEVATION
SCALE: 3/16" = 1'-0"

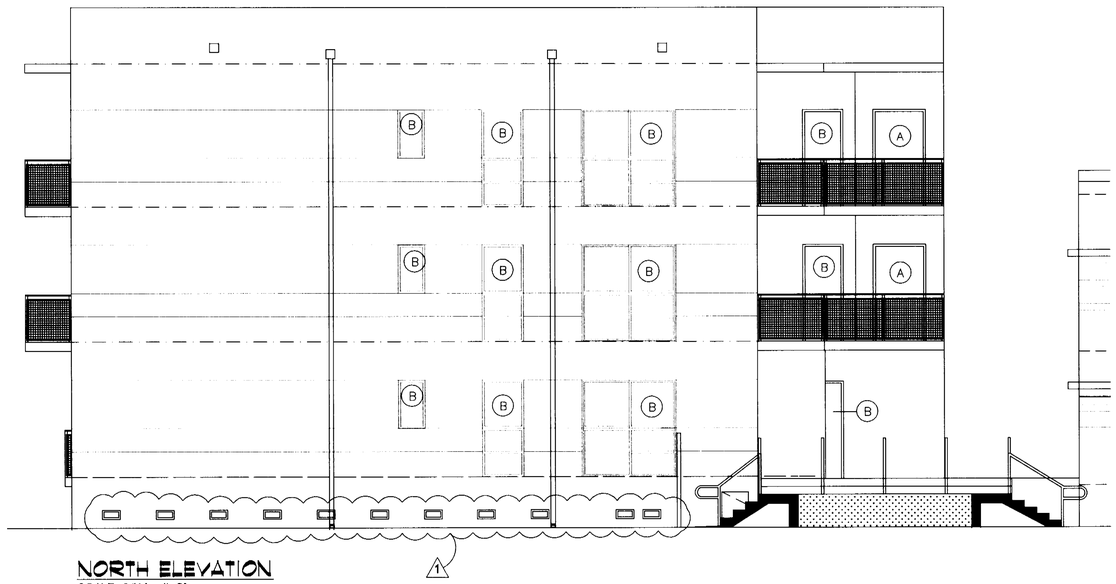

NORTH ELEVATION
SCALE: 3/16" = 1'-0"

DOORS AND WINDOWS		
SHALL BE DESING TO RESIST THE FOLLOWING WIND LOADS BASED ON ASCE 7-02		
(A)	+59.1 P.S.F.	-78.4 P.S.F.
(B)	+59.8 P.S.F.	-64.8 P.S.F.
(C)	+57.2 P.S.F.	-74.5 P.S.F.
(D)	+57.2 P.S.F.	-62.2 P.S.F.

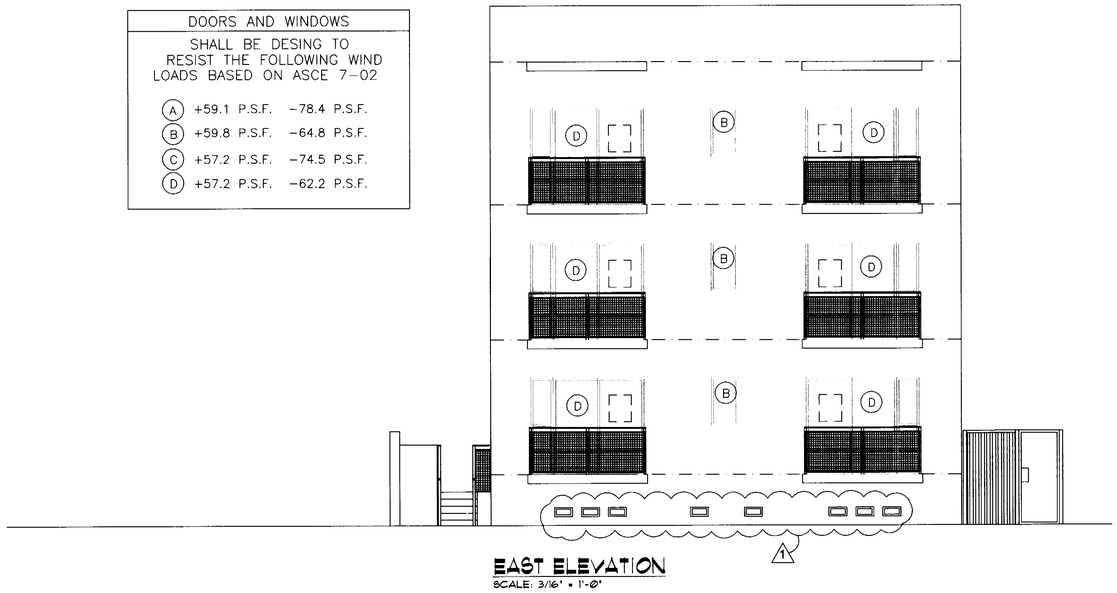

EAST ELEVATION
SCALE: 3/16" = 1'-0"

DRAWN BY: SL
12-10-06
REVISIONS:
1 2-08-07 BLDG. DEPT. COMMENT

3D DESIGN INC.
ANTHONY LEON
AR0016752
ARCHITECTURE
4300 BISCAYNE BLVD. SUITE#204 MIAMI, FL 33137 T.305.438.9377 F.305.438.9378

SEAL

NEW BLDG. FOR
1529 JEFFERSON AVE.
MIAMI BEACH, FL
33139

Sam Lyubkin, P.E.
Consulting Engineer
Forum Building 2632 Hollywood Boulevard
Suite 103 Hollywood, Florida 33020
(954) 922-8845
P.E. #34306

TO THE BEST OF THE ENGINEER'S KNOWLEDGE, THE PLANS AND SPECIFICATIONS BY THE ENGINEER FOR THIS PLUMBING COMPLY WITH THE MINIMUM APPLICABLE PLUMBING CODES

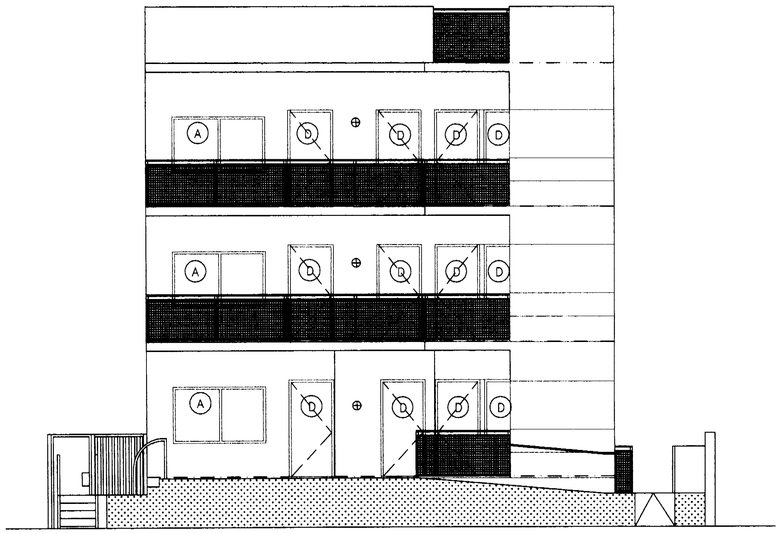

WEST ELEVATION
SCALE: 3/16' = 1'-0'

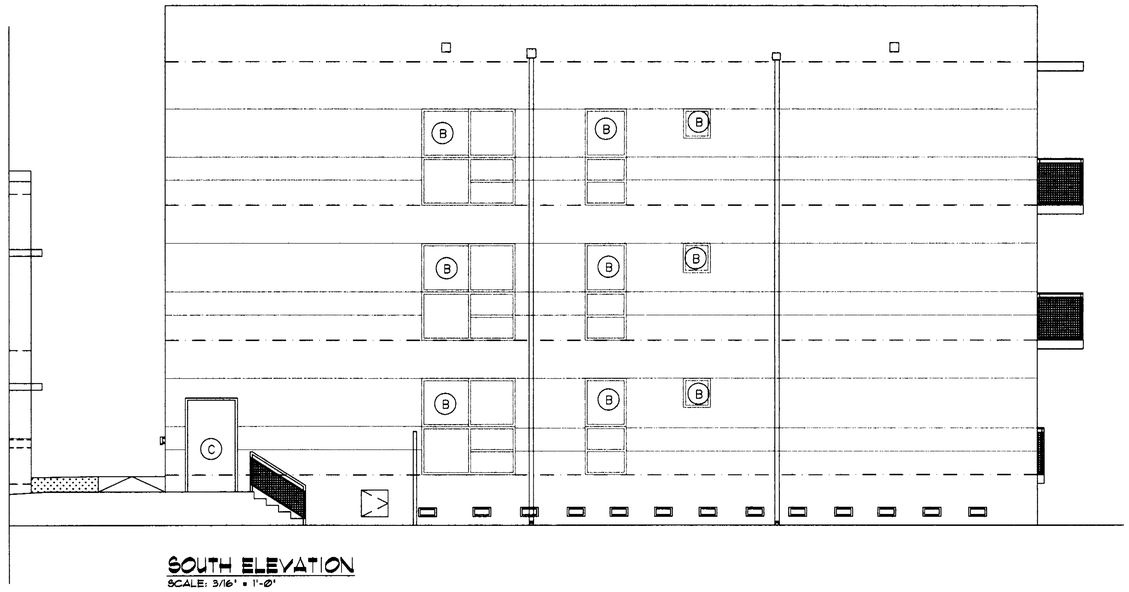

SOUTH ELEVATION
SCALE: 3/16' = 1'-0'

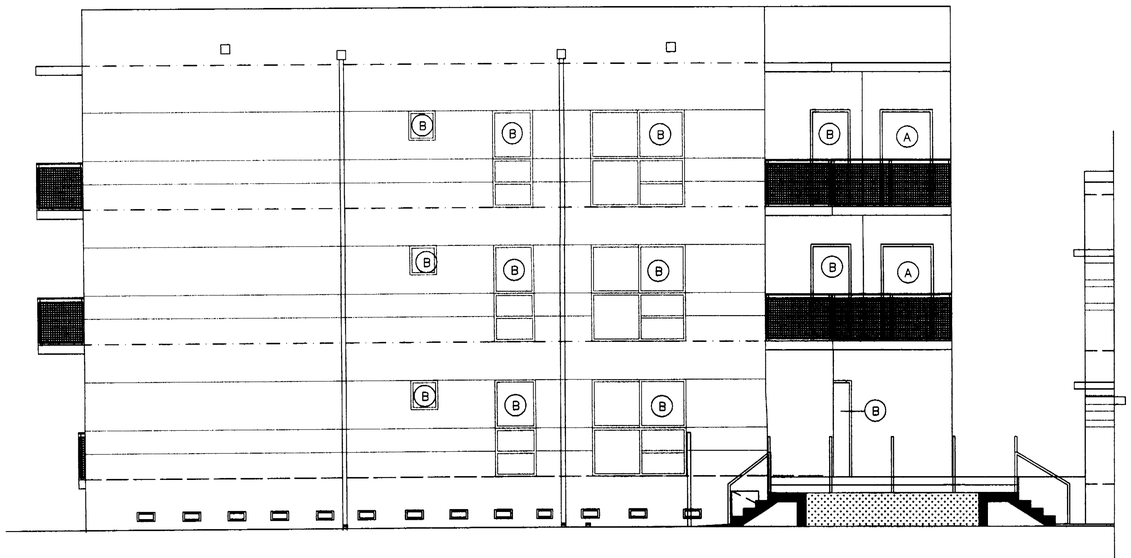

NORTH ELEVATION
SCALE: 3/16' = 1'-0'

DOORS AND WINDOWS		
SHALL BE DESING TO RESIST THE FOLLOWING WIND LOADS BASED ON ASCE 7-02		
(A)	+59.1 P.S.F.	-78.4 P.S.F.
(B)	+59.8 P.S.F.	-64.8 P.S.F.
(C)	+57.2 P.S.F.	-74.5 P.S.F.
(D)	+57.2 P.S.F.	-62.2 P.S.F.

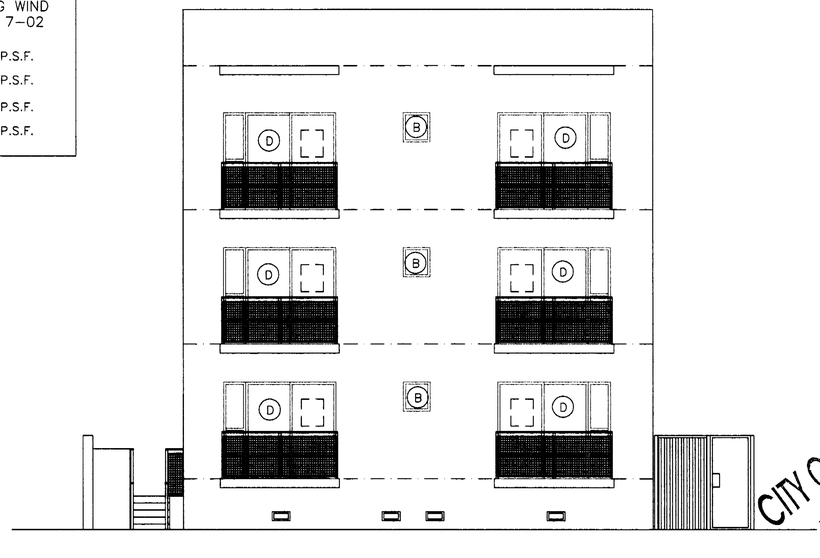

EAST ELEVATION
SCALE: 3/16' = 1'-0'

DRAWN BY:

REVISIONS:

3DESIGN, INC
ANTHONY LEON
AR0006752
ARCHITECTURE
4300 BISCAYNE BLVD. SUITE#604 MIAMI, FL 33137 T.305.438.9377 F.305.438.9378

SEAL

NEW BLDG. FOR
1529 JEFFERSON AVE.
MIAMI BEACH, FL
33139

CITY OF MIAMI BEACH

Sam Lyubkin, P.E.
Consulting Engineer
Forum Building 2632 Hollywood Boulevard
Suite 103 Hollywood, Florida 33020
(954) 922-8845
P.E. #34306

TO THE BEST OF THE ENGINEER'S KNOWLEDGE, THE PLANS AND SPECIFICATIONS BY THE ENGINEER FOR THIS BUILDING COMPLY WITH THE MINIMUM APPLICABLE BUILDING CODES

12-13-06

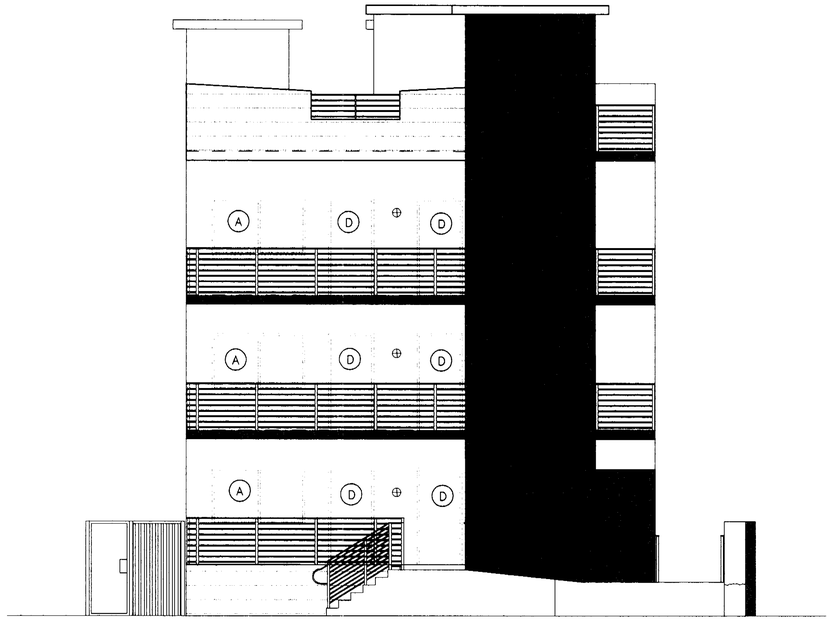

WEST ELEVATION
SCALE: 3/16" = 1'-0"



SOUTH ELEVATION
SCALE: 3/16" = 1'-0"

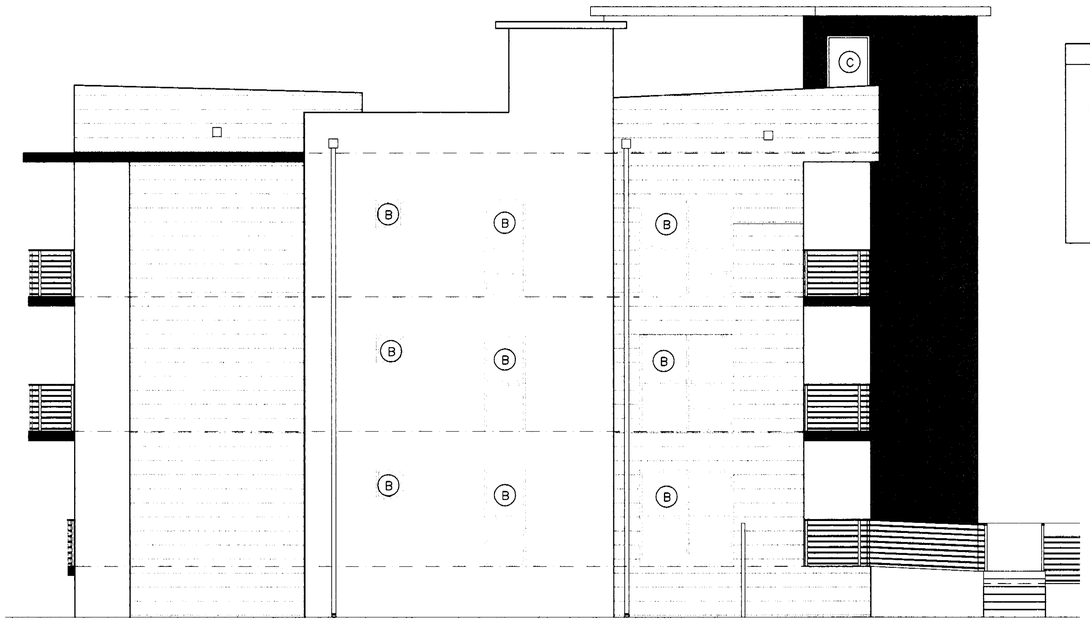

NORTH ELEVATION
SCALE: 3/16" = 1'-0"

DOORS AND WINDOWS		
SHALL BE DESING TO RESIST THE FOLLOWING WIND LOADS BASED ON ASCE 7-02		
(A)	+59.1 P.S.F.	-78.4 P.S.F.
(B)	+59.8 P.S.F.	-64.8 P.S.F.
(C)	+57.2 P.S.F.	-74.5 P.S.F.
(D)	+57.2 P.S.F.	-62.2 P.S.F.

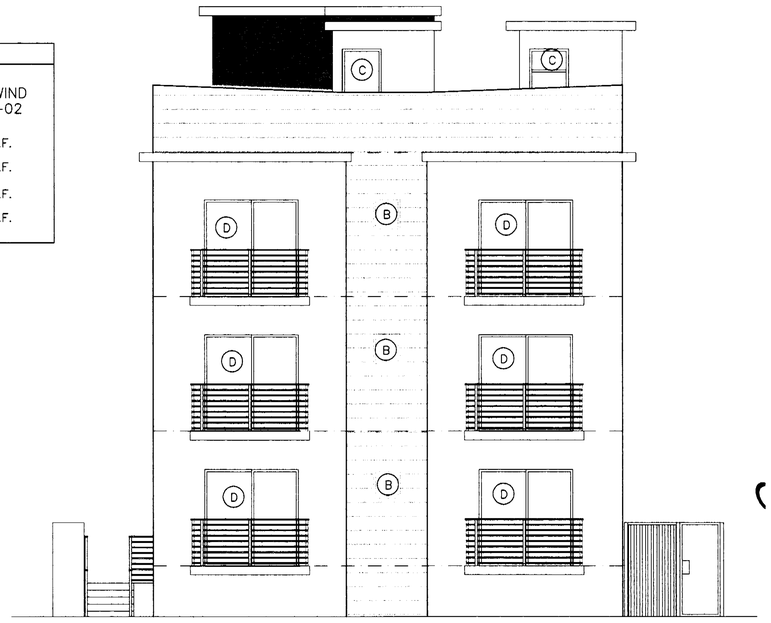

EAST ELEVATION
SCALE: 3/16" = 1'-0"

DRAWN BY:

REVISIONS:

SEAL

3DESIGN, INC
ANTHONY LEON
ARCHITECTURE
AR0006252
4300 BISCAYNE BLVD. SUITE#604 MIAMI, FL 33137 T 305.438.9377 F 305.438.9378

NEW BLDG.
FOR
1529 JEFFERSON AVE.
MIAMI BEACH, FL
33139

MIAMI BEACH
ORB/HPB
CONCURRENCY
PLUMBING
ELECTRICAL
MECHANICAL
FIRE PREVEN
ENGINEERING
PUBLIC WORKS
STRUCTURAL

Sam Lyubkin, P.E.
Consulting Engineer
Forum Building 2632 Hollywood Boulevard
Suite 103 Hollywood, Florida 33020
(954) 922-8845
P.E. #34306

TO THE BEST OF THE ENGINEERS KNOWLEDGE, THE PLANS AND SPECIFICATIONS BY THE ENGINEER FOR THIS BUILDING COMPLY WITH THE MINIMUM APPLICABLE BUILDING CODES

6-20-16
Date

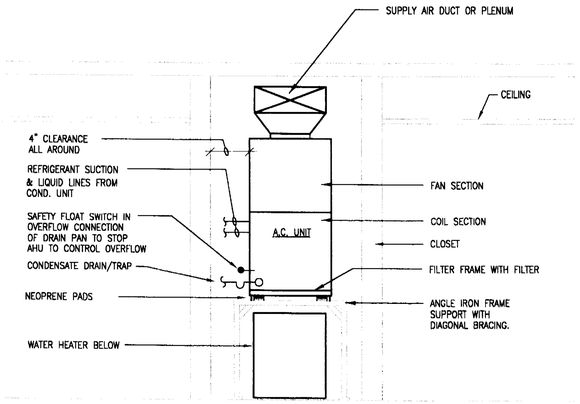

TYPICAL A/C UNIT MOUNTING DETAIL
N.T.S.

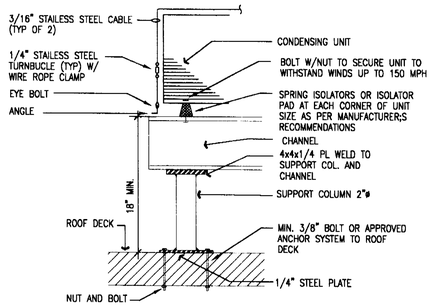

CONDENSING UNIT ROOF MOUNTING DETAIL
N.T.S.

NOTES:
1. SEE ARCH. DWGS. FOR ACTUAL ROOF CONSTRUCTION AND FLASHING / COUNTER FLASHING DETAILS (TYP).
2. PROVIDE ALL ALUMINUM EWUIPMENT STAND.

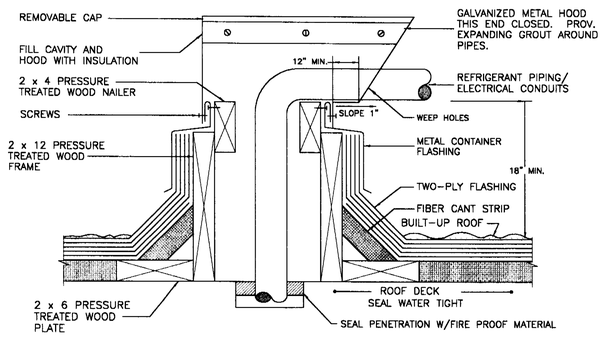

REFRIGERANT PIPING ROOF PENETRATION DETAIL
N.T.S.

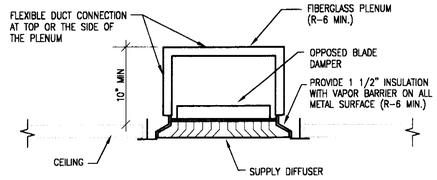

TYPICAL DIFFUSER INSTALLATION DETAIL
N.T.S.

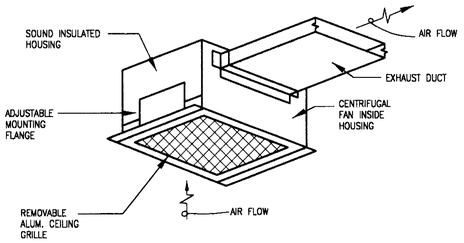

EXHAUST FAN DETAIL CEILING MOUNTED TYPE
N.T.S.

NOTES:
1. EXHAUST FANS EF-1 THRU EF-12 'NUTONE' MODEL QT-80 80 CFM, 115V, 1.5 SONES. PROVIDE BACKDRAFT DAMPER.

1

HVAC DESIGN REQUIRES:	YES	NO
DUCT SMOKE DETECTOR		X
FIRE DAMPER(S)		X
SMOKE DAMPER(S)		X
FIRE RATED ENCLOSURE		X
FIRE RATED ROOF/FLOOR CEILING ASSEMBLY	X	
FIRE STOPPING	X	
SMOKE CONTROL		X

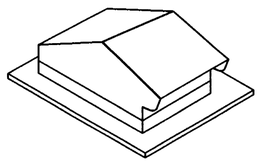

EXHAUST WEATHER CAP DETAIL
N.T.S.

NOTE:
1. TOIL. EXH. SHALL DISCHARGE MIN. 6" ABOVE FINISHED ROOF AND SHALL BE SCREENED WITH CORROSION RESISTANT MATERIAL WITH MESH NOT LARGER THAN 1/2"
2. DRYER EXH. DISCHARGE ON ROOF SHALL BE SIMILAR TO TOILET EXH. DISCHARGE BUT SHALL BE FREE OF SCREEN.

HVAC LEGEND

AHU	AIR HANDLING UNIT
CU	CONDENSING UNIT
EF	EXHAUST FAN
T	THERMOSTAT (PROGRAMMABLE)
UC	1" UNDERCUT (ALL BEDROOM DOORS, TOILET DOORS & AS INDICATED)

AIR DISTRIBUTION SCHEDULE

SYMBOL	USE	TYPE	ACCESSORIES	DESIGN, MFR, & MODEL #
A	SUPPLY AIR	CLG.DIFFUSER	O.B.D.	TITUS 250-AA
B	RETURN AIR	WALL/CLG GRILLE	-	TITUS 3-FL
C	SUPPLY AIR	SIDEWALL REG.	O.B.D.	TITUS 272 FS

NOTES: 1. COORDINATE COLOR FINISH WITH ARCHITECT
2. ALL GRILLES SHALL BE OF ALUMINUM CONSTRUCTION
3. APPROVED EQUAL MANUFACTURERS ARE ACCEPTABLE.

HVAC GENERAL NOTES

1. ALL WORK SHALL BE DONE IN ACCORDANCE WITH FLORIDA BUILDING CODE, FLORIDA ENERGY EFFICIENCY CODE AND ALL LOCAL ORDINANCES.
2. CONTRACTORS SHALL FURNISH ALL LABOR MATERIALS, EQUIPMENT, PERMITS, FEES, INSPECTIONS, AND INSURANCE ETC. REQUIRED.
3. CONTRACTOR SHALL VERIFY SPACE CONDITIONS AND DIMENSIONS AND SHALL COORDINATE WORK WITH ALL OTHER TRADES PRIOR TO FABRICATING DUCTWORK OR INSTALLING EQUIPMENT OR PIPING.
4. AIR CONDITIONING DUCTWORK SHALL BE CONSTRUCTED OF ONE AND HALF INCH THICK (R-6 MINIMUM) FIBERGLASS DUCTBOARD WITH REINFORCED ALUMINUM FOIL FACED COVERING FABRICATED AND INSTALLED PER S.M.A.C.N.A. RECOMMENDATIONS. USE R-4.2 IN CONDITIONED SPACE.
5. ALL VENTILATION AND EXHAUST DUCTWORK SHALL BE OF GALVANIZED SHEET METAL CONSTRUCTED AS PER S.M.A.C.N.A. RECOMMENDATIONS.
6. REFRIGERANT PIPING SHALL BE TYPE "L" COPPER TUBING SIZED AND INSTALLED PER MANUFACTURER RECOMMENDATIONS. INSULATE SUCTION AND CONDENSATE PIPING WITH 3/4 INCH THICK FOAM PLASTIC OF FIRE RETARDANT TYPE 25/50 MAXIMUM SMOKE DEVELOPED AND FLAME SPREAD RATING RESPECTIVELY PER TEST IN NFPA-255. FINISH, WHERE EXPOSED WITH TWO COAST OF ACRYLIC LACQUER IN ACCORDANCE WITH MANUFACTURER'S INSTRUCTIONS.
7. ALL EQUIPMENT, MATERIALS AND WORKMANSHIP SHALL BE GUARANTEED FOR A PERIOD OF ONE YEAR FROM THE DATE OF ACCEPTANCE. COMPRESSOR SHALL CARRY A FIVE-YEAR FACTORY GUARANTEE.
8. AIR CONDITIONING SYSTEM SHALL BE BALANCED TO OBTAIN COMFORT CONDITIONS WITHOUT DRAFT IN ALL AREAS AND TO DELIVER AIR QUANTITIES INDICATED IN THE DRAWINGS. CONTRACTOR SHALL ADJUST THE COLLAR SIZES FOR THIS PURPOSE, AT THE FLEXIBLE DUCT TAKE-OFF, OR PROVIDE DAMPERS AT BRANCH DUCT TAKE-OFF.
9. THERMOSTAT SHALL BE HEAT /COOL TYPE WITH FAN AND SYSTEM SELECTOR SWITCH ON SUB-BASE MOUNT 54" ABOVE FINISHED FLOOR WHERE SHOWN OR PER HANDICAP CODE REQUIREMENTS.
10. ALL DUCT ELBOWS GREATER THAN FORTY-FIVE (45) DEGREES SHALL BE FITTED WITH TURNING VANES.
11. ALL DUCT DIMENSIONS INDICATED IN THE DRAWINGS ARE CLEAR AIR- SIDE DIMENSIONS.
12. PROVIDE READY ACCESSIBILITY TO DAMPERS AND OTHERS PARTS OF THE SYSTEM REQUIRED TO BE REACHED FOR MAINTENANCE OR OPERATIONS.
13. VERIFY ALL VOLTAGES WITH ELECTRICAL CONTRACTORS BEFORE ORDERING ANY EQUIPMENT.
14. VIBRATION ISOLATION: ALL EQUIPMENT AS PER MANUFACTURE'S RECOMMENDATIONS OR AS SCHEDULE ON DRAWINGS.
15. ALL OUTSIDE EQUIPMENT SHALL BE SECURED TO WITHSTAND 150 M.P.H. WINDS.
16. ALL EQUIPMENT SHALL BE AS SPECIFIED OR APPROVED EQUAL SUBMIT SHOP DRAWINGS. INCLUDING 1/4" SCALE DUCTWORK SHOP DRAWINGS.
17. FLEXIBLE DUCT SHALL BE FACTORY FABRICATED ROUND DUCTWORK COMPOSED OF CORROSION-RESISTANT REINFORCING WIRE HELIX PERMANENTLY BONDED AND ENCLOSED IN POLYESTER FILM, THEN COVERED WITH 1 1/2 INCH THICK 3/4 PCF (R-6 MINIMUM) DENSITY FIBERGLASS INSULATION BLANKET SHEATHED IN A VAPOR BARRIER OF ALUMINUM METALIZED POLYESTER FILM LAMINATED TO GLASS MESH, ELASTOMER BACK COATED. THE DUCT SHALL COMPLY WITH NFPA BULLETIN 90-A AND BE LISTED AS CLASS 1 AIR DUCT, UL 181. DUCT SHALL BE "WIREMOLD" TYPE WC OR EQUAL. USE R-4.2 IN CONDITIONED SPACE.
18. UNDERGROUND REFRIGERANT PIPING IF ANY, SHALL RUN IN PVC CONDUIT WITH SEALED ENDS.

AIR COOLED SPLIT A/C UNIT SCHEDULE

		UNIT DESIGNATION	AHU-1 THRU 6
AIR HANDLING UNIT		AREA SERVED	SEE PLAN
		OPEARTING WEIGHT LBS	200
		DESIGN MANUFACTURER	TRANE
		MODEL NUMBER	2TEC3F24
	FAN	TOTAL AIR CFM	800
		VENT AIR CFM	-
		EXTERNAL STATIC PRESSURE IN. OF H20	0.35
		FAN MOTOR HP (NON-OVERLOAD)/F.L.A.	1/3 / 4.1
		ELECTRICAL SERVICE AVAILABLE	230-1-60
		SMOKE DETECTOR	-
	COIL	GRAND TOTAL CAPACITY BTU/HR.	22,400
		TOTAL SENSIBLE CAPACITY BTU/HR.	16,400
		ENTERING AIR TEMP. DB/WB.	80/67
	FILTER	TYPE AND THICKNESS	T.A.-1"
		QUANTITY & SIZE	1-20X20
	HEAT	ELECTRIC HEAT CAPACITY KW	5.76
		NO. OF HEATING STEPS	1
AIR COOLED CONDENSING UNIT		UNIT DESIGNATION	CU-1 THRU 6
		TYPE OF FAN	PROP.
		NO. OF FANS AND HP (E.A)	1 - 1/8
		AMBIENT AIR TEMP. DB	95
		NO. OF COMPRESSORS	1
		CAPACITY REDUCTION	100-0
		COMPRESSOR F.L.A. (EA.)	8.7
		ELECTRICAL SERVICE AVAILABLE	230-1-60
		OPERATING WEIGHT LBS.	180
		DESIGN MANUFACTURER MODEL NO.	2TTB3024
		/SEER	13.0
		REF.LINE SIZE ,SUCT/LIQ.O.D. INCH	3/4"- 3/8"

NOTES: 1 PROVIDE PROGRAMMABLE THERMOSTAT W/SUB-BASE, AHU MOUNTED CIRCUIT BREAKER, SIGHT GLASS, FILTER DRIER.
2 COORDINATE REF. PIPING SIZES WITH MFGR. PROVIDE ALL ACCESSORIES RECOMMENDED BY MFGR.
3 PROVIDE ALTERNATE BID FOR AIR HANDLING UNIT AND COND, UNIT TO HAVE ACRYLIC COATING ON ALL PARTS INCLUDING COILS & FINS (MINIMUM 5 YEAR COATING & PRODUCT WARRANTY). OWNERS OPTION TO ACCEPT.

DRAWN BY:

REVISIONS:
1 BLDG. DEPART. COMMENTS 01-19-07

3DESIGN INC
ANTHONY LEON
ARCH06752
ARCHITECTURE
4300 BISCAYNE BLVD. SUITE#G04 MIAMI, FL 33137 T.305.438.9377 F.305.438.9378

SEAL

NEW BLGD FOR 1529 JEFFERSON AVE MIAMI BEACH, FL 33139

ZONE - C JUN 12 2006

Innovative Engineering Group Inc. CA#6717
5532 N.W. 72nd Ave
Miami, FL 33166
305-888-9626
Sudhir K. Gupta, P.E.
Fla. Reg. No. 29189

M1

JUNE 9, 2006

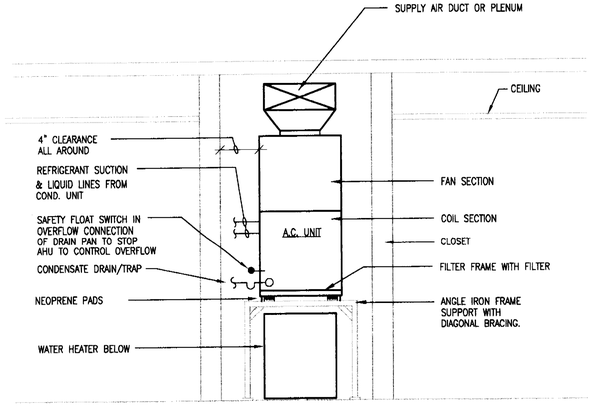

TYPICAL A/C UNIT MOUNTING DETAIL

N.T.S.

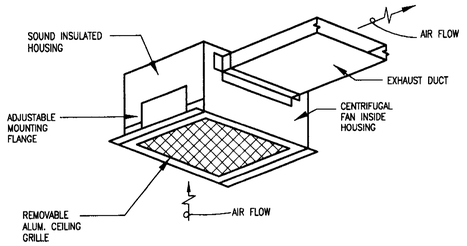

EXHAUST FAN DETAIL CEILING MOUNTED TYPE

N.T.S.

NOTES:

1. EXHAUST FANS EF-1 THRU EF-4 'NUTONE' MODEL QT-80 80 CFM, 115V, 1.5 SONES. PROVIDE BACKDRAFT DAMPER.

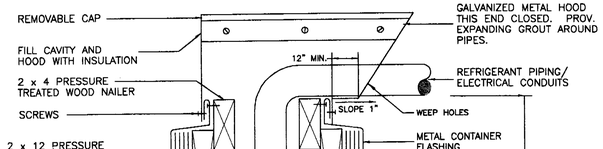

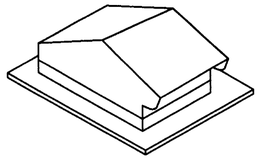

EXHAUST WEATHER CAP DETAIL

N.T.S.

NOTE:

1. TOIL. EXH. SHALL DISCHARGE MIN. 6" ABOVE FINISHED ROOF AND SHALL BE SCREENED WITH CORROSION RESISTANT MATERIAL WITH MESH NOT LARGER THAN 1/2"
2. DRYER EXH. DISCHARGE ON ROOF SHALL BE SIMILAR TO TOILET EXH. DISCHARGE BUT SHALL BE FREE OF SCREEN.

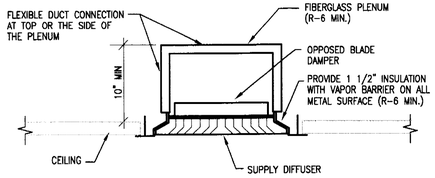

TYPICAL DIFFUSER INSTALLATION DETAIL

N.T.S.

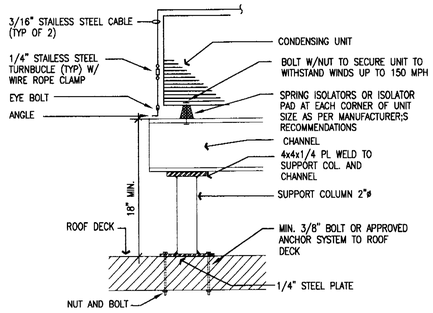

CONDENSING UNIT ROOF MOUNTING DETAIL

N.T.S.

NOTES:

1. SEE ARCH. DWGS. FOR ACTUAL ROOF CONSTRUCTION AND FLASHING / COUNTER FLASHING DETAILS (TYP).
2. PROVIDE ALL ALUMINUM EWUIPMENT STAND.

HVAC LEGEND

AHU	AIR HANDLING UNIT
CU	CONDENSING UNIT
EF	EXHAUST FAN
T	THERMOSTAT (PROGRAMMABLE)
UC	1" UNDERCUT (ALL BEDROOM DOORS, TOILET DOORS & AS INDICATED)

HVAC GENERAL NOTES

1. ALL WORK SHALL BE DONE IN ACCORDANCE WITH FLORIDA BUILDING CODE, FLORIDA ENERGY EFFICIENCY CODE AND ALL LOCAL ORDINANCES.
2. CONTRACTORS SHALL FURNISH ALL LABOR MATERIALS, EQUIPMENT, PERMITS, FEES, INSPECTIONS, AND INSURANCE ETC. REQUIRED.
3. CONTRACTOR SHALL VERIFY SPACE CONDITIONS AND DIMENSIONS AND SHALL COORDINATE WORK WITH ALL OTHER TRADES PRIOR TO FABRICATING DUCTWORK OR INSTALLING EQUIPMENT OR PIPING.
4. AIR CONDITIONING DUCTWORK SHALL BE CONSTRUCTED OF ONE AND HALF INCH THICK (R-6 MINIMUM) FIBERGLASS DUCTBOARD WITH REINFORCED ALUMINUM FOIL FACED COVERING FABRICATED AND INSTALLED PER S.M.A.C.N.A. RECOMMENDATIONS. USE R-4.2 IN CONDITIONED SPACE.
5. ALL VENTILATION AND EXHAUST DUCTWORK SHALL BE OF GALVANIZED SHEET METAL CONSTRUCTED AS PER S.M.A.C.N.A. RECOMMENDATIONS.
6. REFRIGERANT PIPING SHALL BE TYPE "L" COPPER TUBING SIZED AND INSTALLED PER MANUFACTURER RECOMMENDATIONS. INSULATE SUCTION AND CONDENSATE PIPING WITH 3/4 INCH THICK FOAM PLASTIC OF FIRE RETARDANT TYPE 25/50 MAXIMUM SMOKE DEVELOPED AND FLAME SPREAD RATING RESPECTIVELY PER TEST IN NFPA-255. FINISH, WHERE EXPOSED WITH TWO COAST OF ACRYLIC LACQUER IN ACCORDANCE WITH MANUFACTURER'S INSTRUCTIONS.
7. ALL EQUIPMENT, MATERIALS AND WORKMANSHIP SHALL BE GUARANTEED FOR A PERIOD OF ONE YEAR FROM THE DATE OF ACCEPTANCE. COMPRESSOR SHALL CARRY A FIVE-YEAR FACTORY GUARANTEE.
8. AIR CONDITIONING SYSTEM SHALL BE BALANCED TO OBTAIN COMFORT CONDITIONS WITHOUT DRAFT IN ALL AREAS AND TO DELIVER AIR QUANTITIES INDICATED IN THE DRAWINGS. CONTRACTOR SHALL ADJUST THE COLLAR SIZES FOR THIS PURPOSE, AT THE FLEXIBLE DUCT TAKE-OFF, OR PROVIDE DAMPERS AT BRANCH DUCT TAKE-OFF.
9. THERMOSTAT SHALL BE HEAT /COOL TYPE WITH FAN AND SYSTEM SELECTOR SWITCH ON SUB-BASE MOUNT 54" ABOVE FINISHED FLOOR WHERE SHOWN OR PER HANDICAP CODE REQUIREMENTS.
10. ALL DUCT ELBOWS GREATER THAN FORTY-FIVE (45) DEGREES SHALL BE FITTED WITH TURNING VANES.
11. ALL DUCT DIMENSIONS INDICATED IN THE DRAWINGS ARE CLEAR AIR- SIDE DIMENSIONS.
12. PROVIDE READY ACCESSIBILITY TO DAMPERS AND OTHERS PARTS OF THE SYSTEM REQUIRED TO BE REACHED FOR MAINTENANCE OR OPERATIONS.
13. VERIFY ALL VOLTAGES WITH ELECTRICAL CONTRACTORS BEFORE ORDERING ANY EQUIPMENT.
14. VIBRATION ISOLATION: ALL EQUIPMENT AS PER MANUFACTURE'S RECOMMENDATIONS OR AS SCHEDULE ON DRAWINGS.
15. ALL OUTSIDE EQUIPMENT SHALL BE SECURED TO WITHSTAND 150 M.P.H. WINDS.
16. ALL EQUIPMENT SHALL BE AS SPECIFIED OR APPROVED EQUAL SUBMIT SHOP DRAWINGS. INCLUDING 1/4" SCALE DUCTWORK SHOP DRAWINGS.
17. FLEXIBLE DUCT SHALL BE FACTORY FABRICATED ROUND DUCTWORK COMPOSED OF CORROSION-RESISTANT REINFORCING WIRE HELIX PERMANENTLY BONDED AND ENCLOSED IN POLYESTER FILM, THEN COVERED WITH 1 1/2 INCH THICK 3/4 PCF (R-6 MINIMUM) DENSITY FIBERGLASS INSULATION BLANKET SHEATHED IN A VAPOR BARRIER OF ALUMINUM METALIZED POLYESTER FILM LAMINATED TO GLASS MESH, ELASTOMER BACK COATED. THE DUCT SHALL COMPLY WITH NFPA BULLETIN 90-A AND BE LISTED AS CLASS 1 AIR DUCT, UL 181. DUCT SHALL BE "WIREMOLD" TYPE WG OR EQUAL. USE R-4.2 IN CONDITIONED SPACE.
18. UNDERGROUND REFRIGERANT PIPING IF ANY, SHALL RUN IN PVC CONDUIT WITH SEALED ENDS.

AIR COOLED SPLIT A/C UNIT SCHEDULE

		UNIT DESIGNATION	AHU-1 THRU 6
AIR HANDLING UNIT		AREA SERVED	SEE PLAN
		OPEARTING WEIGHT LBS	200
		DESIGN MANUFACTURER	TRANE
		MODEL NUMBER	2TEC3F24
	FAN	TOTAL AIR CFM	800
		VENT AIR CFM	–
		EXTERNAL STATIC PRESSURE IN. OF H20	0.35
		FAN MOTOR HP (NON-OVERLOAD)/F.L.A.	1/3 / 4.1
		ELECTRICAL SERVICE AVAILABLE	230-1-60
		SMOKE DETECTOR	–
	COIL	GRAND TOTAL CAPACITY BTU/HR.	22,400
		TOTAL SENSIBLE CAPACITY BTU/HR.	16,400
		ENTERING AIR TEMP. DB/WB.	80/67
	FILTER	TYPE AND THICKNESS	T.A.-1"
		QUANTITY & SIZE	1-20X20
	HEAT	ELECTRIC HEAT CAPACITY KW	5.76
		NO. OF HEATING STEPS	1
		UNIT DESIGNATION	CU-1 THRU 6

3D DESIGN INC.
ANTHONY LEON
AR0016752
ARCHITECTURE
4500 BISCAYNE BLVD. SUITE#G04 MIAMI, FL 33137 T.305 438 9577 F.305 438 9578

DRAWN BY:

REVISIONS:

SEAL

NEW BLDG
for
1529 JEFFERSON AVE
MIAMI BEACH, FL
33139

CITY OF MIA
APPROVED FOR
THE FOLLOWIN
BUILDING

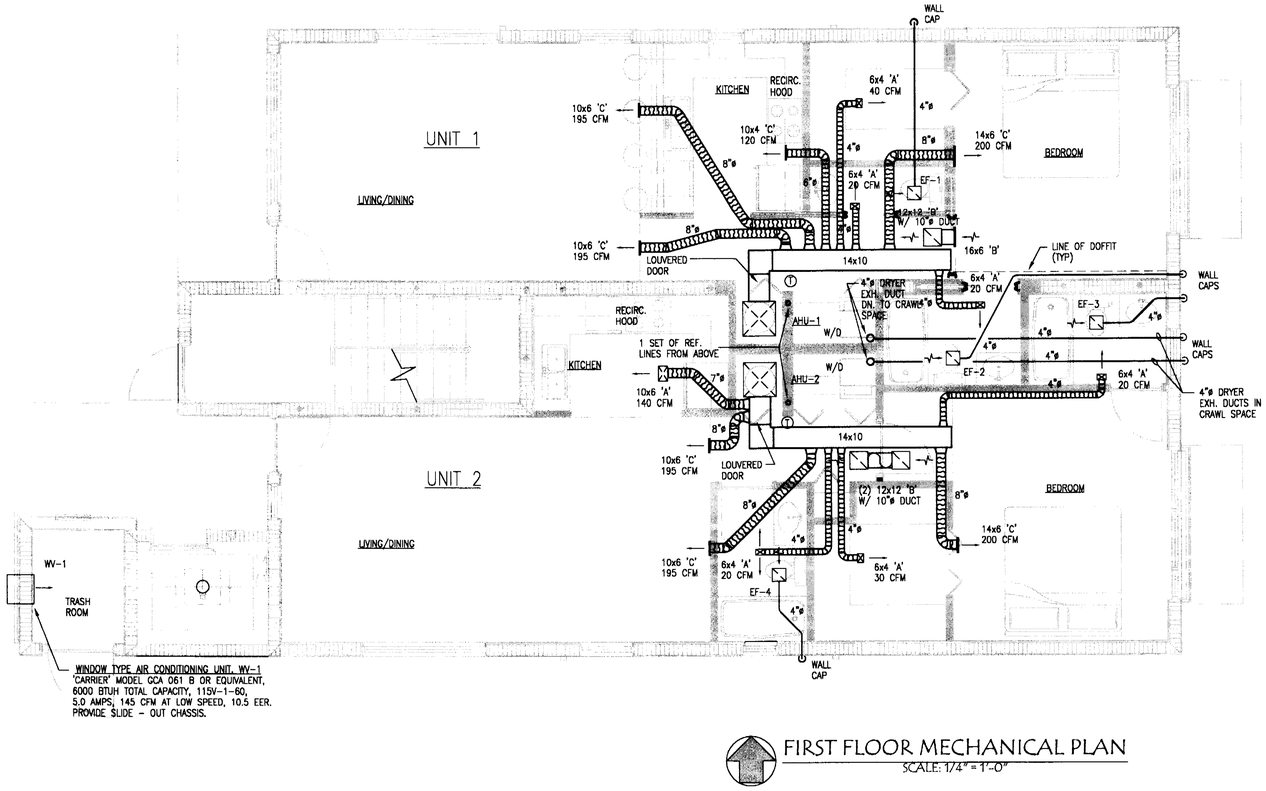

FIRST FLOOR MECHANICAL PLAN
SCALE: 1/4" = 1'-0"

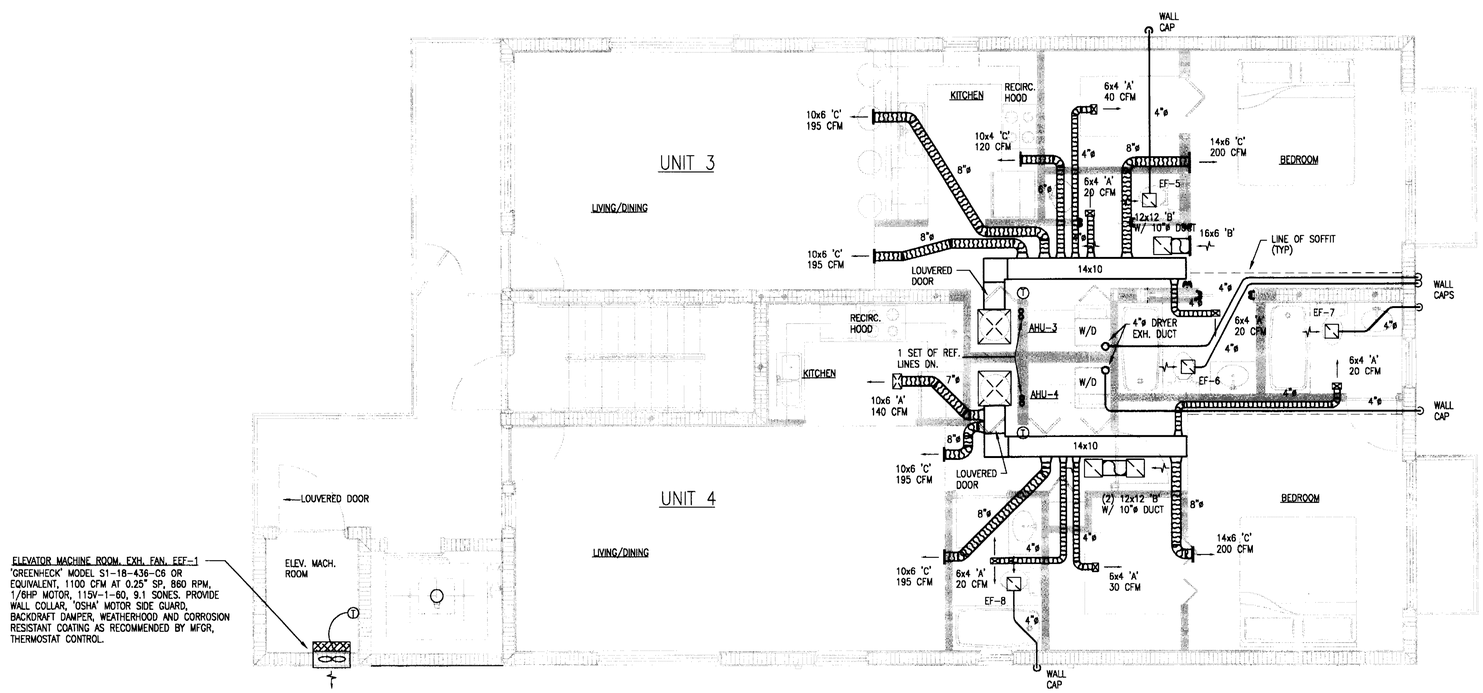

SECOND FLOOR MECHANICAL PLAN
SCALE: 1/4" = 1'-0"

DRAWN BY:

REVISIONS:
OWNER REV. 11-9-06

3D DESIGN INC
ANTHONY LEON
AR0016752
ARCHITECTURE
4300 BISCAYNE BLVD. SUITE #G04 MIAMI, FL 33137 T.305.438.9377 F.305.438.9378

SEAL

NEW BLGD
FOR
1529 JEFFERSON AVE
MIAMI BEACH, FL
33139

Zone 2 JUN 12 2007

3/6/07

Innovative Engineering Group Inc. CA#6717
5532 N.W. 72nd Ave
Miami, FL 33166
305-888-9626
Sudhir K. Gupta, P.E.
Fla. Reg. No. 29189

2/8/07

M2
JUNE 9, 2006

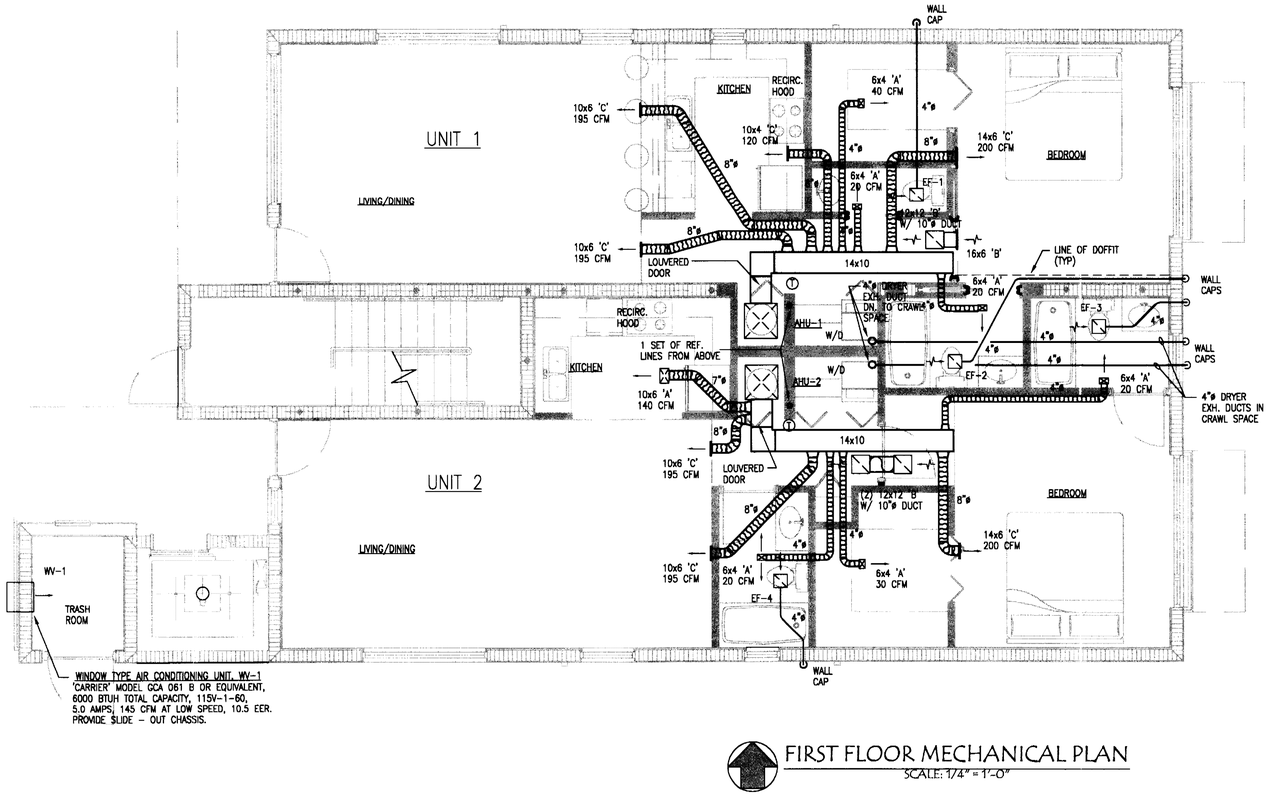

FIRST FLOOR MECHANICAL PLAN
SCALE: 1/4" = 1'-0"

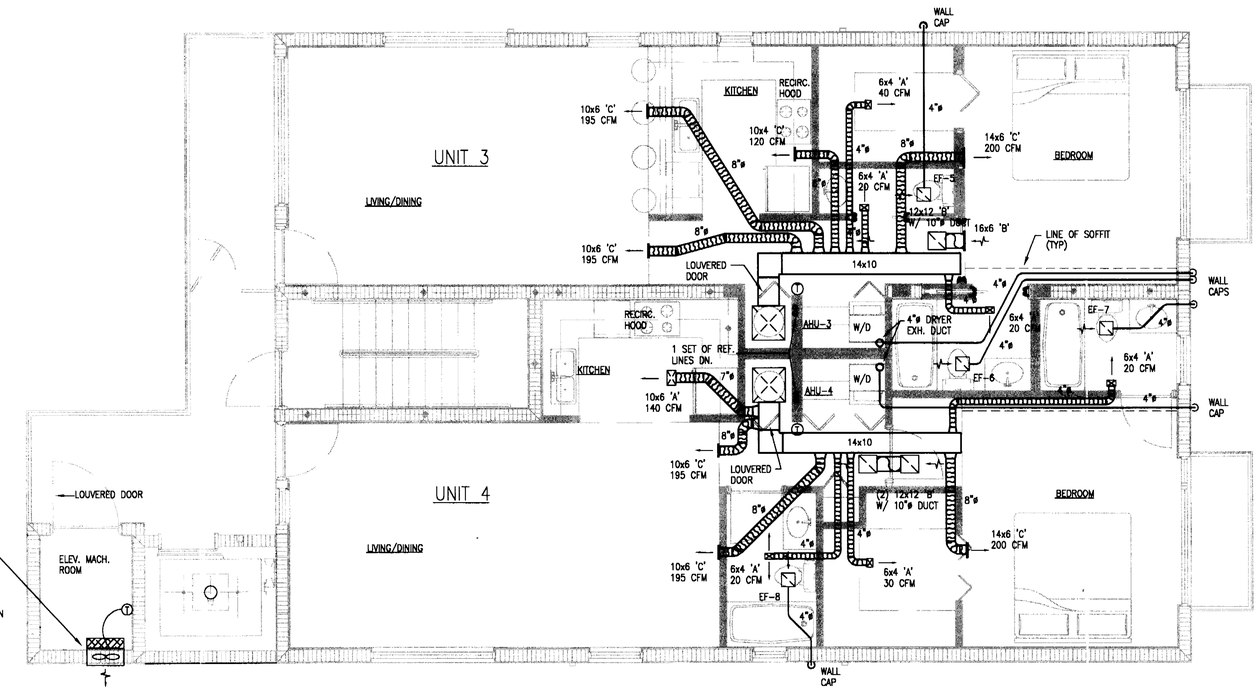

SECOND FLOOR MECHANICAL PLAN
SCALE: 1/4" = 1'-0"

DRAWN BY:

REVISIONS:
OWNER REV. 11-9-06

2D DESIGN INC.
ANTHONY LEON
AR0016752
ARCHITECTURE
4300 BISCAYNE BLVD. SUITE 604 MIAMI, FL 33137 T 305.438.9377 F 305.438.9378

SEAL

NEW BLGD
FOR
1529 JEFFERSON AVE
MIAMI BEACH, FL
33139

CITY OF MIAMI BEACH
VOID

Innovative Engineering Group Inc. CA#6717
5532 N.W. 72nd Ave
Miami, FL 33166
305-888-9626
Sudhir K. Gupta, P.E.
Fla. Reg. No. 29169

11/14/06

M2

JUNE 9, 2006

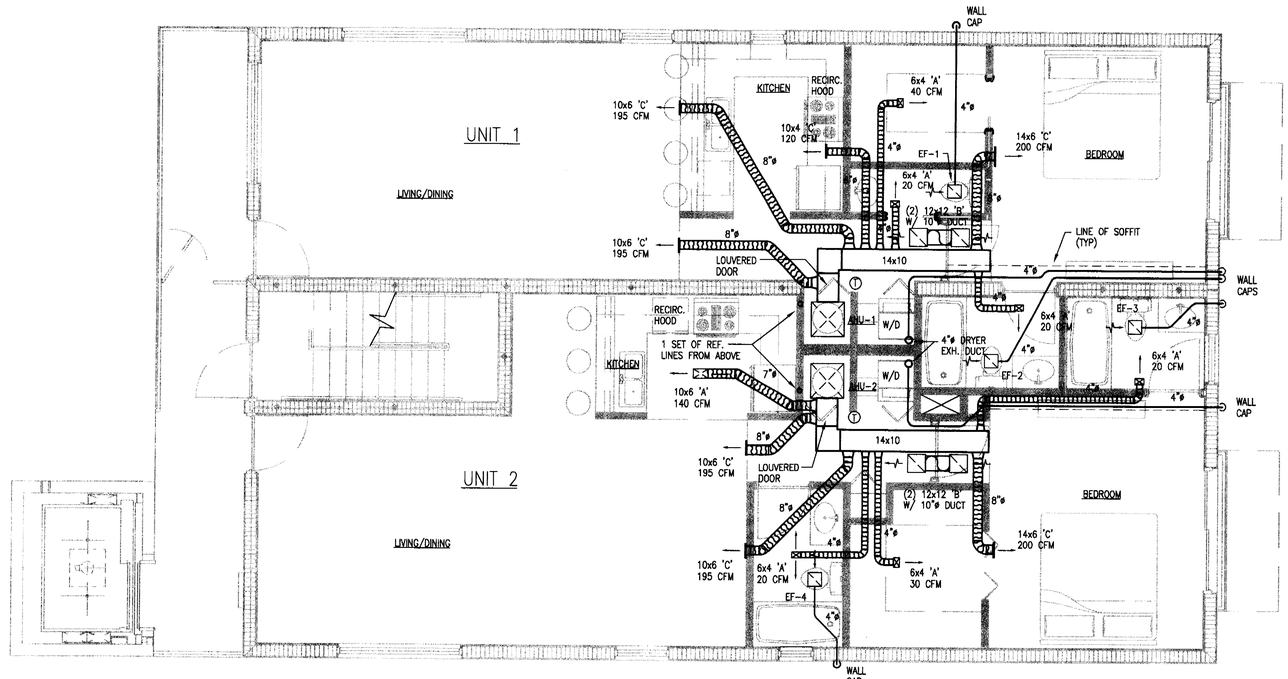

FIRST FLOOR MECHANICAL PLAN
SCALE: 1/4" = 1'-0"

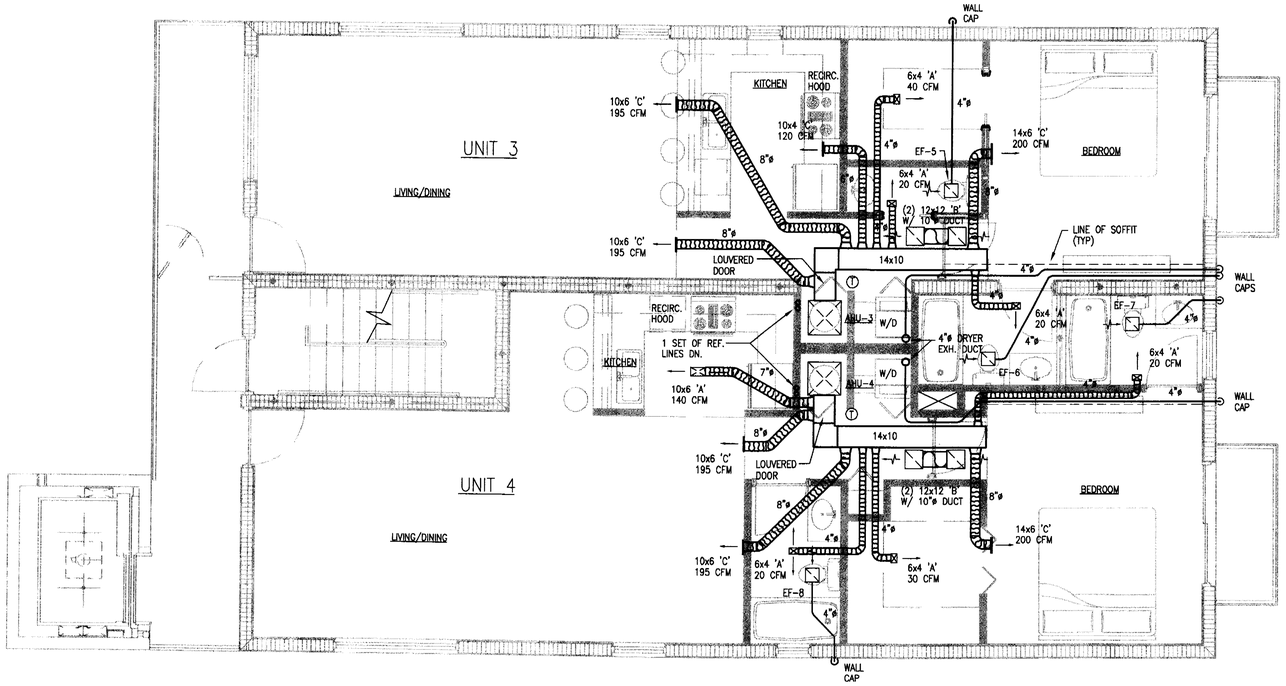

SECOND FLOOR MECHANICAL PLAN
SCALE: 1/4" = 1'-0"

3D DESIGN INC
ANTHONY LEON
AR0016752
ARCHITECTURE
4300 BISCAYNE BLVD. SUITE#604 MIAMI, FL 33137 T:305.438.9377 F:305.438.9378

DRAWN BY:

REVISIONS:

SEAL

NEW BLDG
FOR
1529 JEFFERSON AVE
MIAMI BEACH, FL
33139

COPY
MIAMI BEACH
PERMIT BY
ING:

CITY OF MIAMI BEACH

Innovative Engineering Group Inc. CA#6717
5532 N.W. 72nd Ave
Miami, FL 33166
305-888-9628
Sudhir K. Gupta, P.E.
Fla. Reg. No. 29189

M2

JUNE 9, 2006

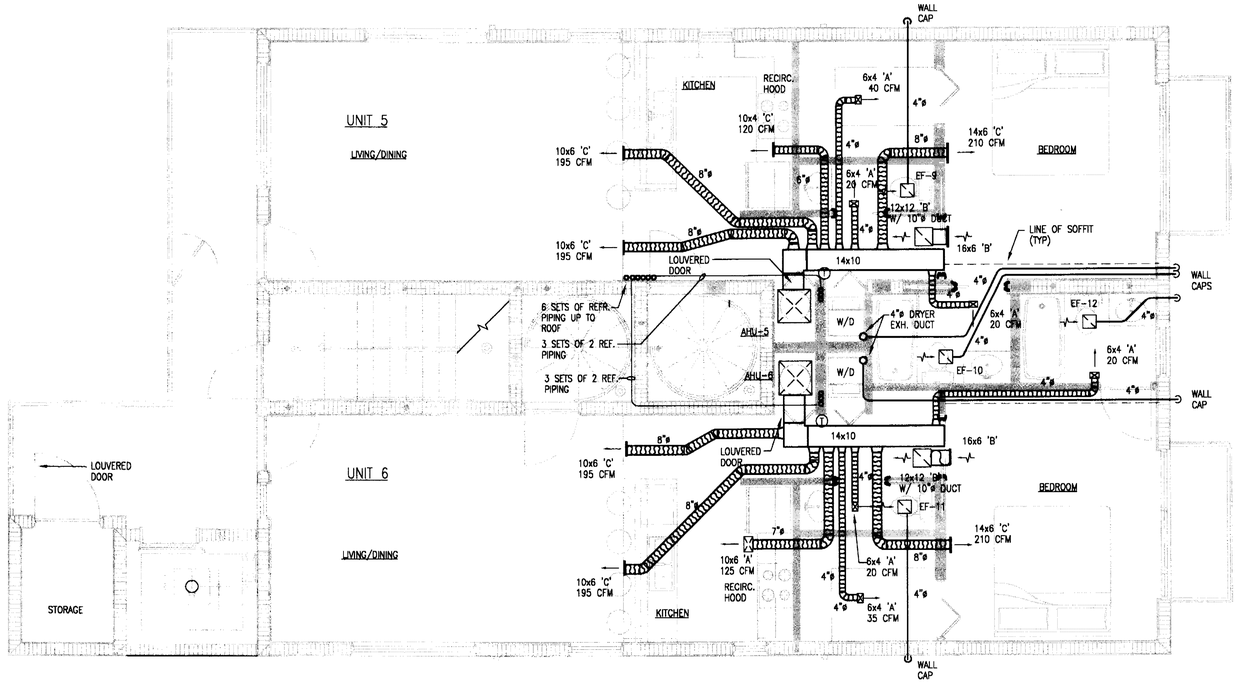

THIRD FLOOR MECHANICAL PLAN
SCALE: 1/4" = 1'-0"

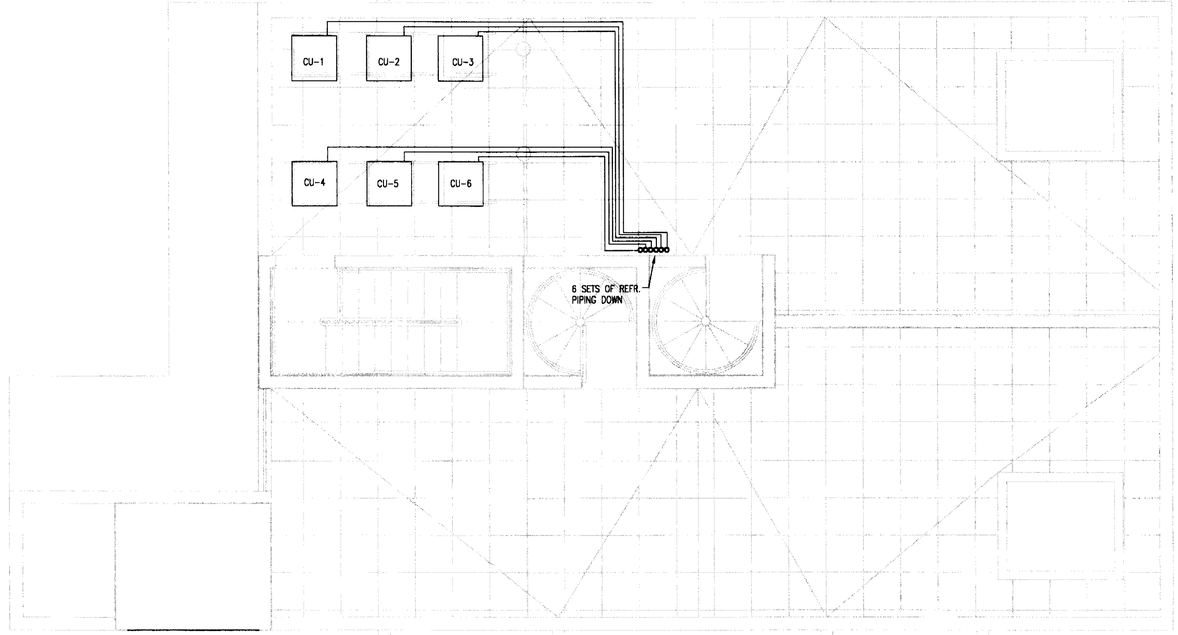

MECHANICAL ROOF PLAN
SCALE: 1/4" = 1'-0"

DRAWN BY:

REVISIONS:
OWNER REV. 11-9-05

3DESIGN INC
ANTHONY LEON
ARCHITECTURE
AR0006752
4300 BISCAYNE BLVD. SUITE#604 MIAMI, FL 33137 T:305.438.9577 F:305.438.9378

SEAL

NEW BLDG
1529 JEFFERSON AVE
MIAMI BEACH, FL
33139

Zone 'C' JUN 12 2006

Innovative Engineering Group Inc. CA#6717
5532 N.W. 72nd Ave
Miami, FL 33166
305-888-9626
Sudhir K. Gupta, P.E.
Fla. Reg. No. 29189

M3

JUNE 9, 2006

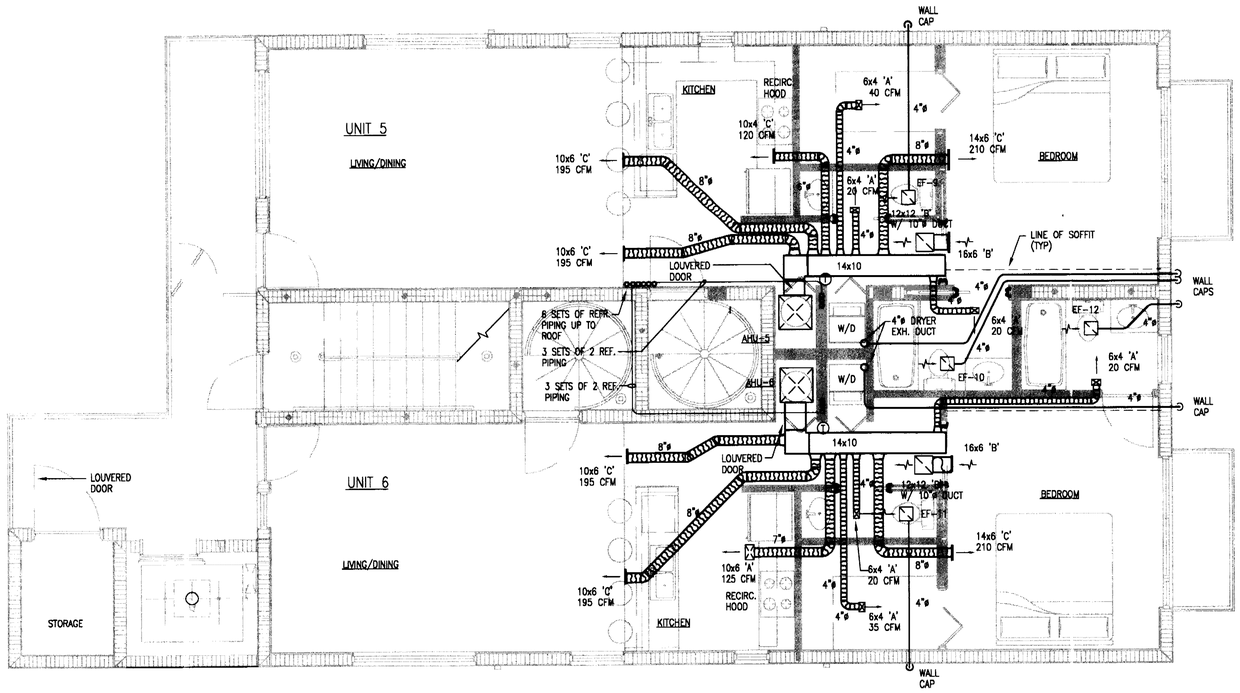

THIRD FLOOR MECHANICAL PLAN
SCALE: 1/4" = 1'-0"

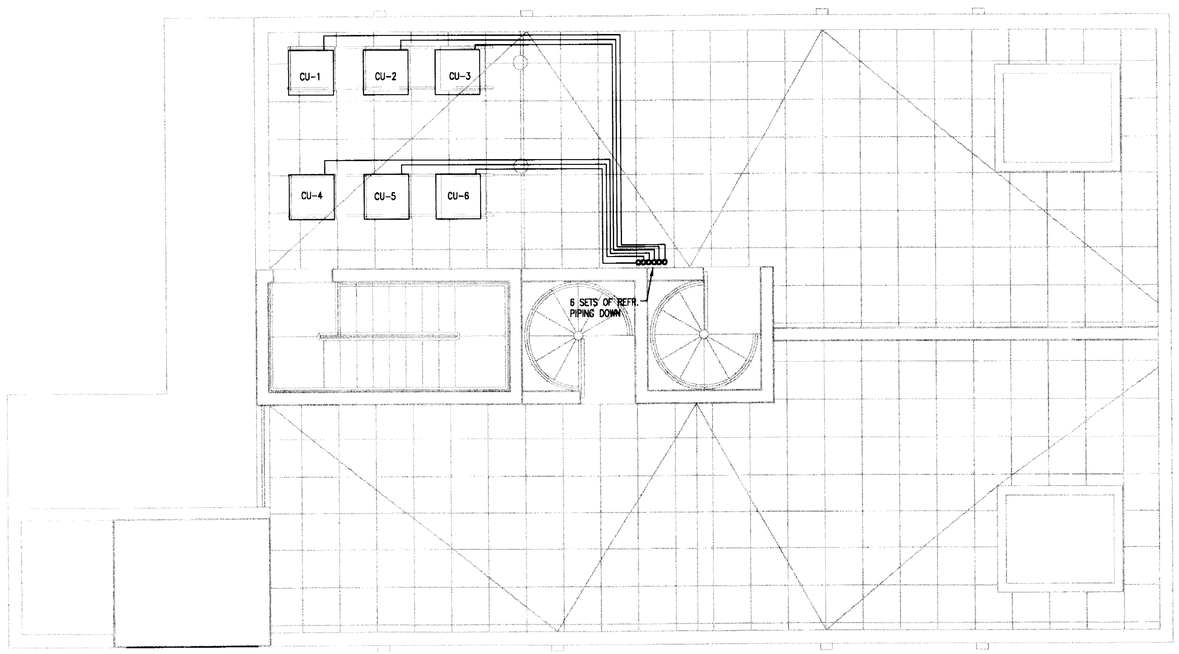

MECHANICAL ROOF PLAN
SCALE: 1/4" = 1'-0"

DRAWN BY:

REVISIONS:
OWNER REV. 11-9-06

3DESIGN INC
ANTHONY LEON
ARCHITECTURE
AR0016752
4500 BISCAYNE BLVD. SUITE#G04 MIAMI, FL 33137 T.305.458.9377 F.305.458.9378

SEAL

NEW BLGD
FOR
1529 JEFFERSON AVE
MIAMI BEACH, FL
33139

CITY OF MIAMI BEACH
VOID

Innovative Engineering Group Inc. CA#6717
5532 N.W. 72nd Ave
Miami, FL 33166
305-888-9626
Sudhir K. Gupta, P.E.
Fla. Reg. No. 29189

11/14/06

M3

JUNE 9, 2006

VOID

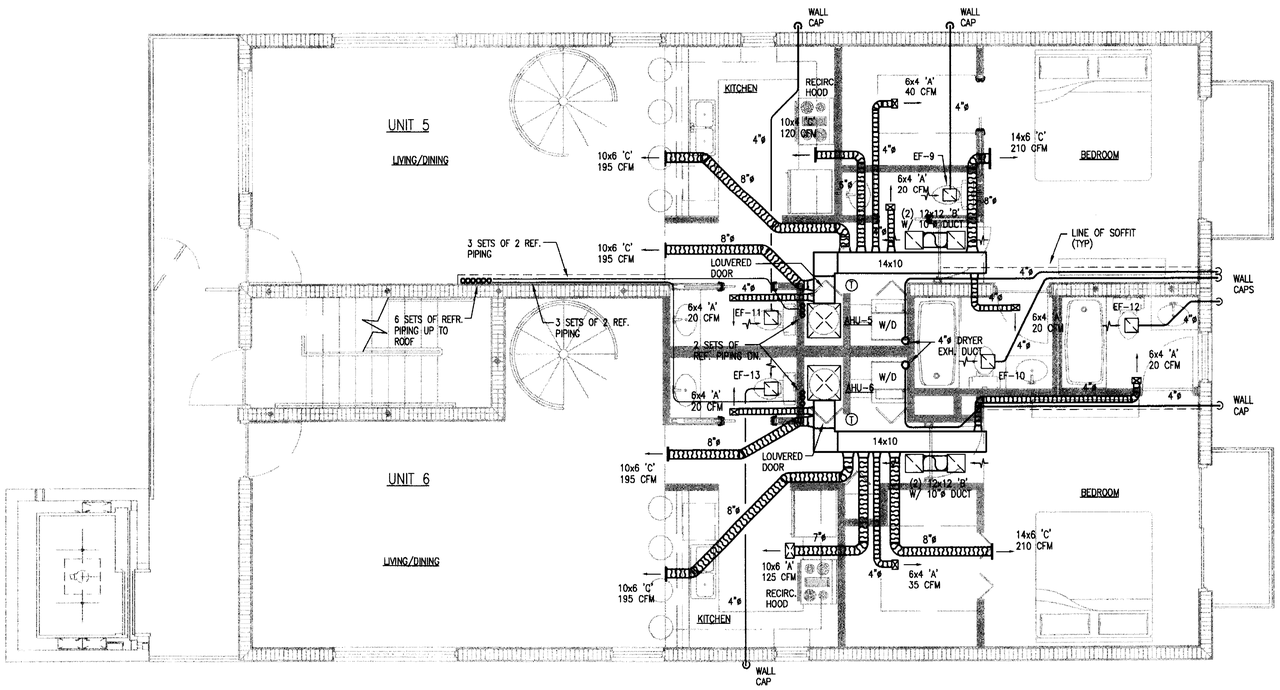

THIRD FLOOR MECHANICAL PLAN
SCALE: 1/4" = 1'-0"

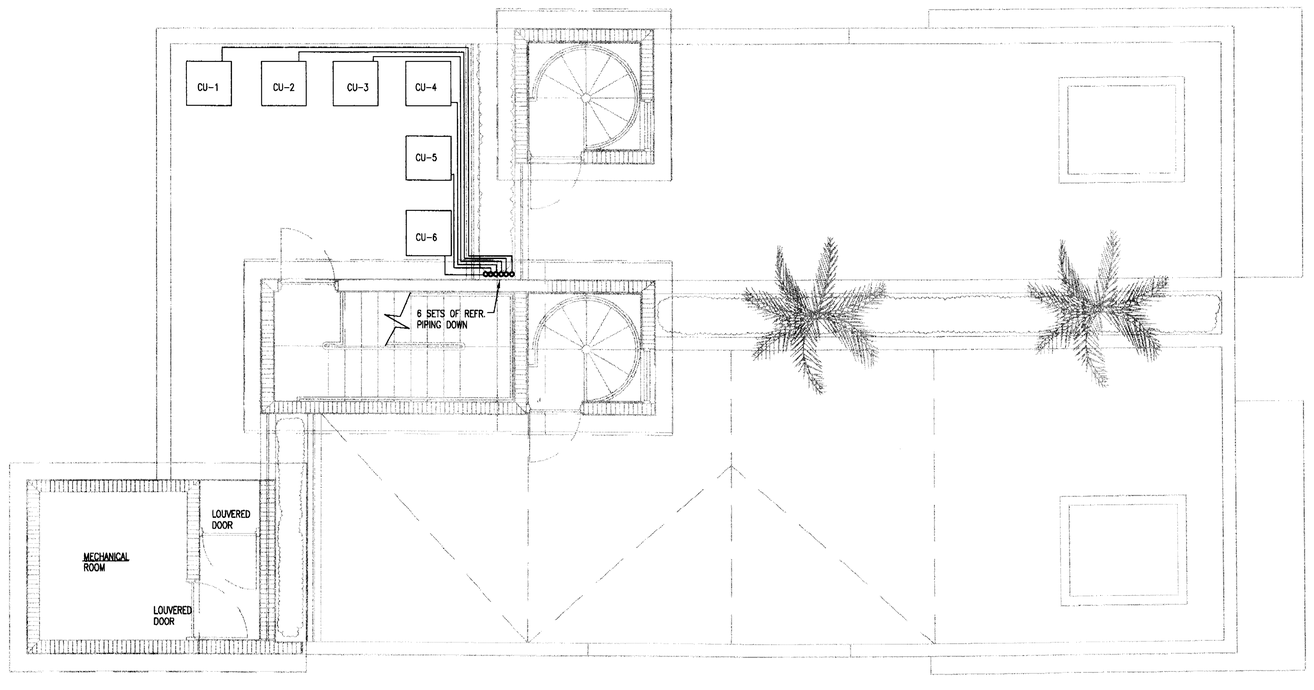

MECHANICAL ROOF PLAN
SCALE: 1/4" = 1'-0"

DRAWN BY:

REVISIONS:

3DESIGN INC
ANTHONY LEON
AR0006752
ARCHITECTURE
4300 BISCAYNE BLVD. SUITE#604 MIAMI, FL 33137 T:305.458.9377 F:305.458.9578

SEAL

NEW BLDG FOR
1529 JEFFERSON AVE
MIAMI BEACH, FL
33139

OFFICE COPY
CITY OF MIAMI BEACH
APPROVED FOR PERMIT BY
THE FOLLOWING:
BUILDING:
ZONING:
DRB/HPB:
CONCURRENCY:
PLUMBING:
ELECTRICAL:
MECHANICAL:
FIRE PREVENTION:
ENGINEERING:
PUBLIC WORKS:
STRUCTURAL:
ACCESSIBILITY:
ELEVATOR:
As per Florida Building Code Section 104.5.3
REVISED

CITY OF MIAMI BEACH
VAR

Innovative Engineering Group Inc. CA#6717
5532 N.W. 72nd Ave
Miami, FL 33166
305-888-9626
Sudhir K. Gupta, P.E.
Fla. Reg. No. 29189

M3

JUNE 9, 2006

DRAWN BY:

REVISIONS:

1. OWNER REV. 11-08-06
2. BLDG. DEPT. COMMENTS 01-09-07

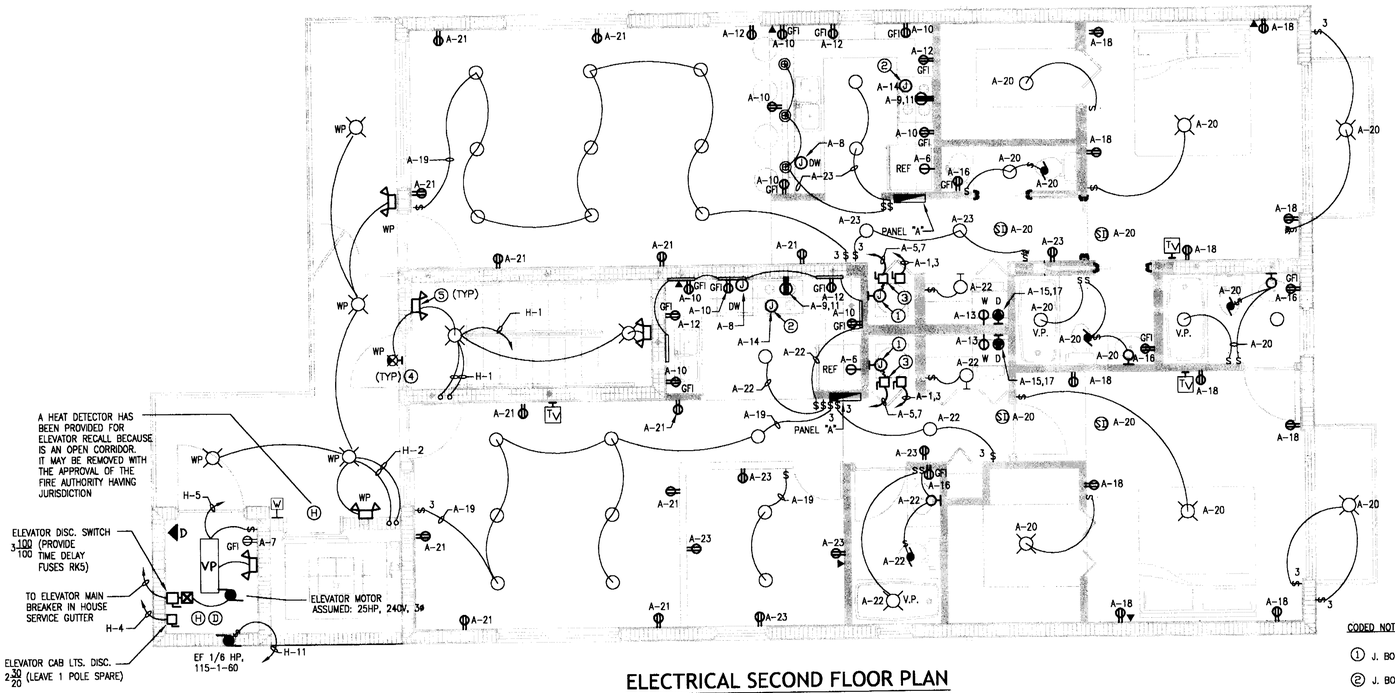

ELECTRICAL SECOND FLOOR PLAN

SCALE: 1/4" = 1'-0"

CODED NOTES:

1. J. BOX FOR 4.5KW, 240V, 1ø WATER HEATER
2. J. BOX FOR EXH. HOOD FAN/LIGHT
3. 2 30/NF DISC. NON-FUSED
4. TYPICAL SELF CONTAINED BATTERY OPERATED EXIT LIGHT CONNECTED AHEAD OF TIME CLOCK
5. TYPICAL SELF CONTAINED BATTERY OPERATED EMERGENCY LIGHT (WEATHER PROOF) CONNECTED AHEAD OF TIME CLOCK

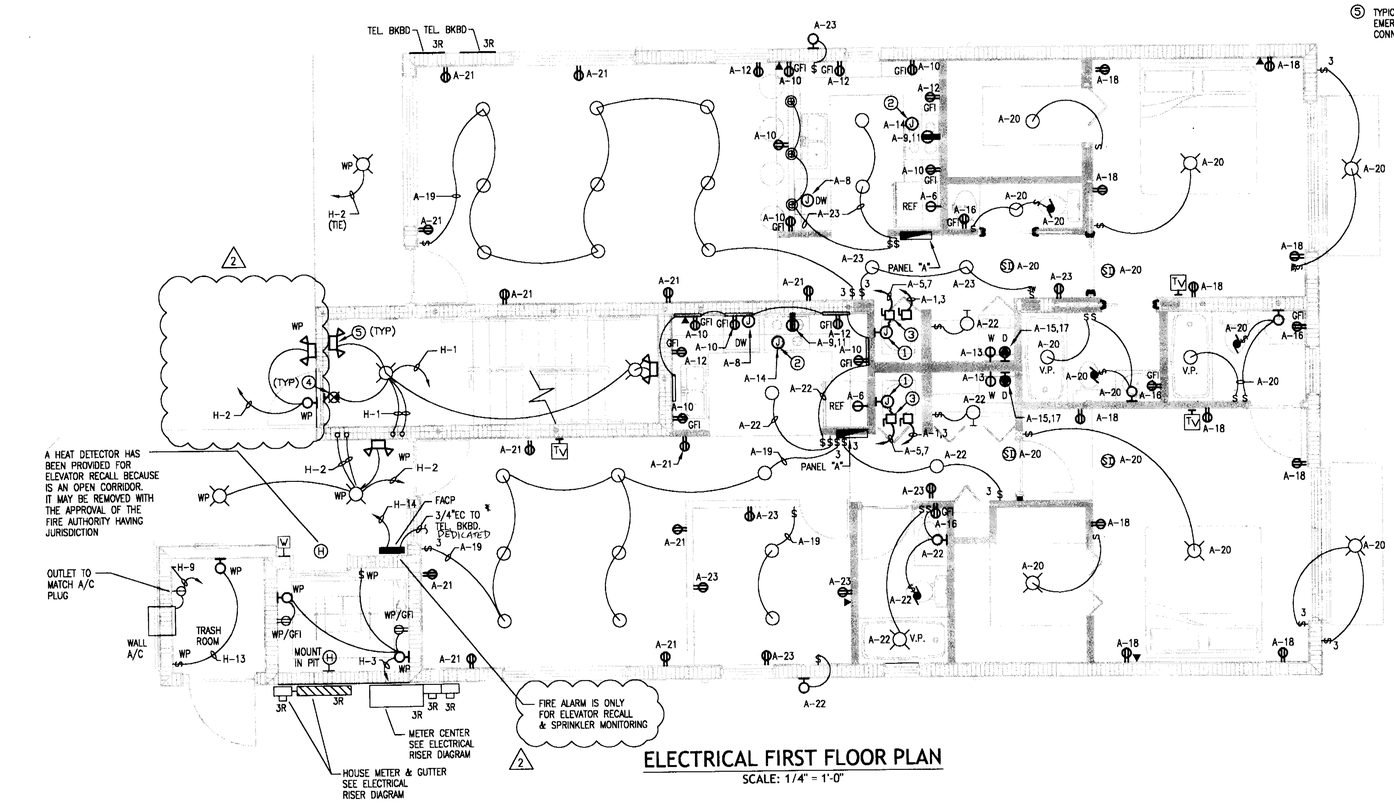

ELECTRICAL FIRST FLOOR PLAN

SCALE: 1/4" = 1'-0"

3D DESIGN, INC.
ANTHONY LEON
AR0016752
ARCHITECTURE
4300 BISCAYNE BLVD. SUITE#G04 MIAMI, FL 33137 T.305.438.9377 F.305.438.9378

SEAL

NEW BLGD FOR 1529 JEFFERSON AVE MIAMI BEACH, FL 33139

OFFICE COPY

CITY OF MIAMI BEACH

APPROVED FOR PERMIT BY DRAWING:

JUN 12 2006

5/25/07

FIRE PREVENTION

ENGINEERING:

PUBLIC WORKS:

STRUCTURAL:

ACCESSIBILITY:

Innovative Engineering Group Inc. CA#6717
5532 N.W. 72nd Ave
Miami, FL 33166
305-888-9626
Sudhir K. Gupta, P.E.
Fla. Reg. No. 29189

2/12/07

E-1

JUNE 9, 2006

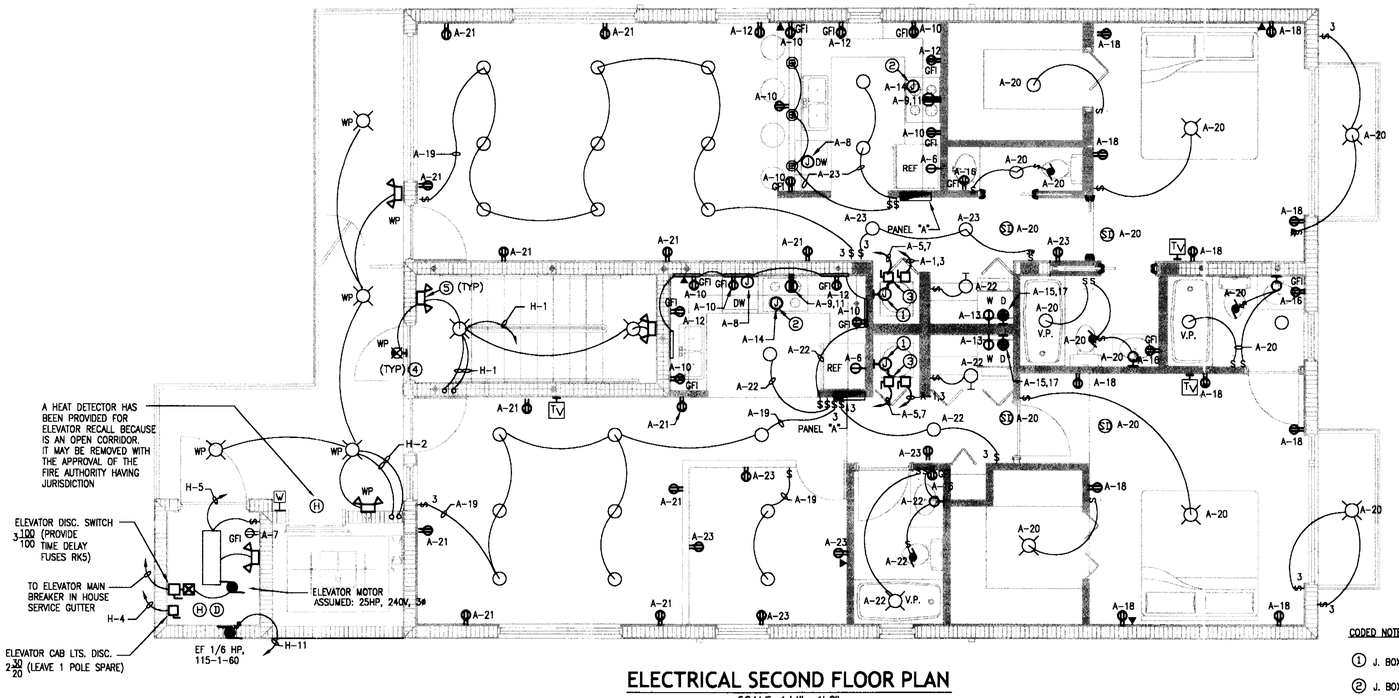

ELECTRICAL SECOND FLOOR PLAN

SCALE: 1/4" = 1'-0"

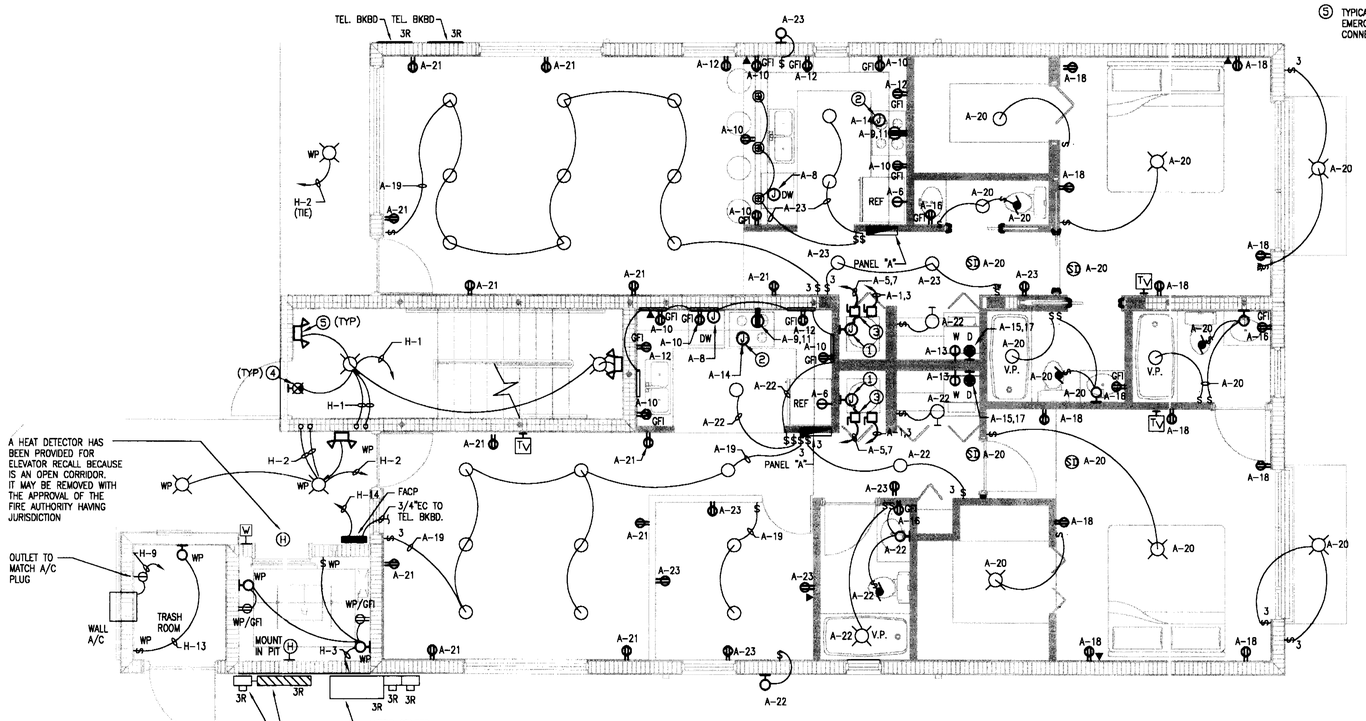

ELECTRICAL FIRST FLOOR PLAN

SCALE: 1/4" = 1'-0"

CODED NOTES:

1. J. BOX FOR 4.5KW, 240V, 1ø WATER HEATER
2. J. BOX FOR EXH. HOOD FAN/LIGHT
3. 2 30 NF DISC. NON-FUSED
4. TYPICAL SELF CONTAINED BATTERY OPERATED EXIT LIGHT CONNECTED AHEAD OF TIME CLOCK
5. TYPICAL SELF CONTAINED BATTERY OPERATED EMERGENCY LIGHT (WEATHER PROOF) CONNECTED AHEAD OF TIME CLOCK

DRAWN BY:

REVISIONS:

OWNER REV. 11-8-06

SEAL

3DESIGN INC
ANTHONY LEON
AR0006752
ARCHITECTURE
4300 BISCAYNE BLVD SUITE#604 MIAMI, FL 33137 T.305.438.9377 F.305.438.3378

NEW BLGD
for
1529 JEFFERSON AVE
MIAMI BEACH, FL
33139

CITY OF MIAMI BEACH

VOID

Innovative Engineering Group Inc. CA#6717
5532 N.W. 72nd Ave
Miami, FL 33166
305-888-9626
Sudhir K. Gupta, P.E.
Fla. Reg. No. 29189

11/14/06

E-1

JUNE 9, 2006

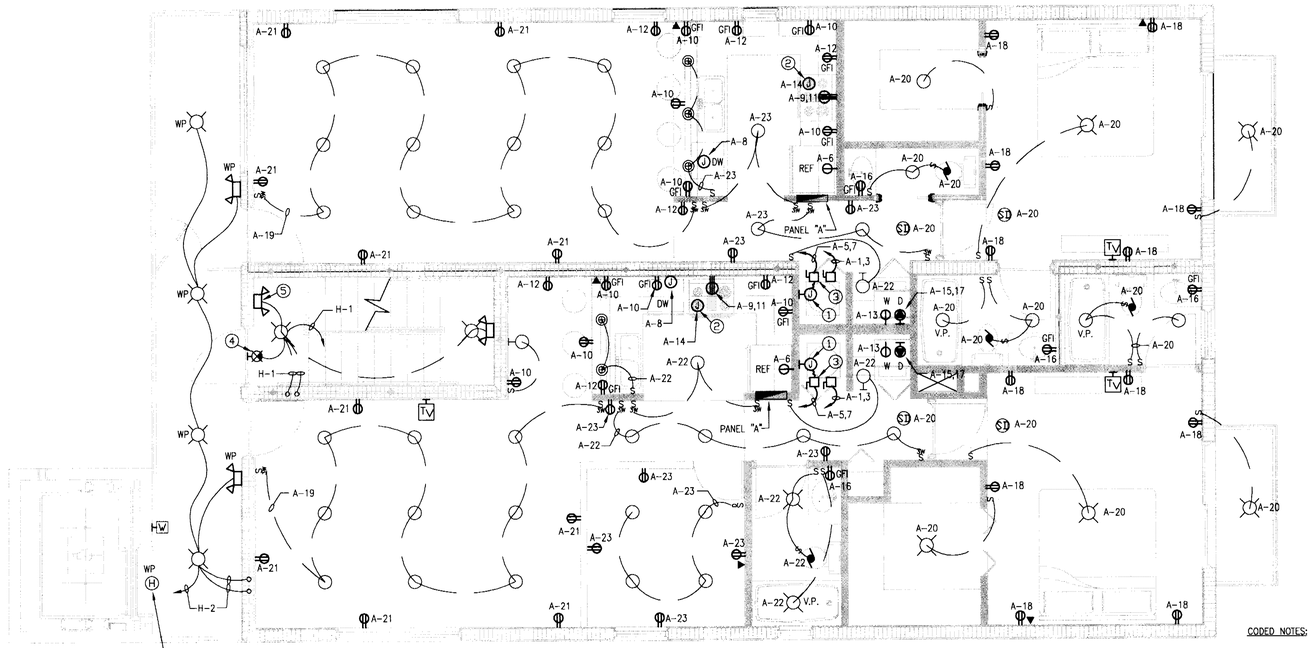

A HEAT DETECTOR HAS BEEN PROVIDED FOR ELEVATOR RECALL BECAUSE IS AN OPEN CORRIDOR. IT MAY BE REMOVED WITH THE APPROVAL OF THE FIRE AUTHORITY HAVING JURISDICTION

ELECTRICAL SECOND FLOOR PLAN

SCALE: 1/4" = 1'-0"

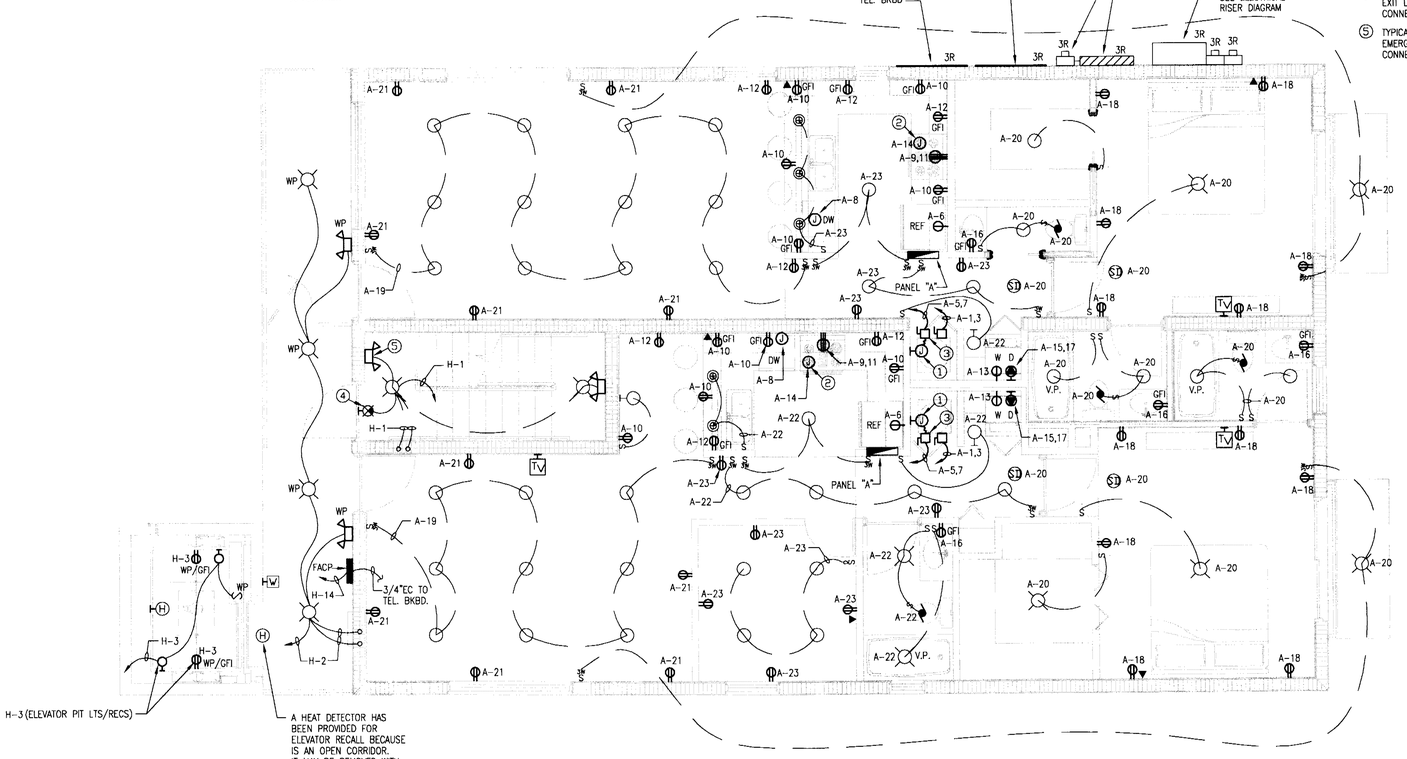

A HEAT DETECTOR HAS BEEN PROVIDED FOR ELEVATOR RECALL BECAUSE IS AN OPEN CORRIDOR. IT MAY BE REMOVED WITH THE APPROVAL OF THE FIRE AUTHORITY HAVING JURISDICTION

ELECTRICAL FIRST FLOOR PLAN

SCALE: 1/4" = 1'-0"

CODED NOTES:

1. J. BOX FOR 4.5KW, 240V, 1ø WATER HEATER
2. J. BOX FOR EXH. HOOD FAN/LIGHT
3. $2\frac{30}{NF}$ DISC. NON-FUSED
4. TYPICAL SELF CONTAINED BATTERY OPERATED EXIT LIGHT (WEATHER PROOF) CONNECTED AHEAD OF TIME CLOCK
5. TYPICAL SELF CONTAINED BATTERY OPERATED EMERGENCY LIGHT (WEATHER PROOF) CONNECTED AHEAD OF TIME CLOCK

DRAWN BY:

REVISIONS:

3DESIGN INC.
ANTHONY LEON
AA0003569
ARCHITECTURE
1234 WASHINGTON AVE. SUITE #207 MIAMI BEACH, FL 33139 T.305.531.5208 F.305.531.4515

SEAL

NEW BUILDING FOR
1529 JEFFERSON AVE.
MIAMI BEACH, FL
33139

OFFICE COPY
CITY OF MIAMI BEACH
APPROVED FOR PERMIT BY THE FOLLOWING:

BUILDING:
ZONING:
DRB/HPB:
CONCURRENCY:
PLUMBING:
ELECTRICAL:
MECHANICAL:
FIRE PREVENTION:
ENGINEERING:
PUBLIC WORKS:
STRUCTURAL:
ACCESSIBILITY:
ELEVATOR:

As per Florida Fire Code Section 104.5.3
REVIEWED FOR CODE COMPLIANCE

CITY OF MIAMI BEACH

Innovative Engineering Group Inc. CA#6717
5532 N.W. 72nd Ave
Miami, FL 33166
305-888-9626
Sudhir K. Gupta, P.E.
Fla. Reg. No. 29189

6/10/06

E-1

JANUARY 24, 2006

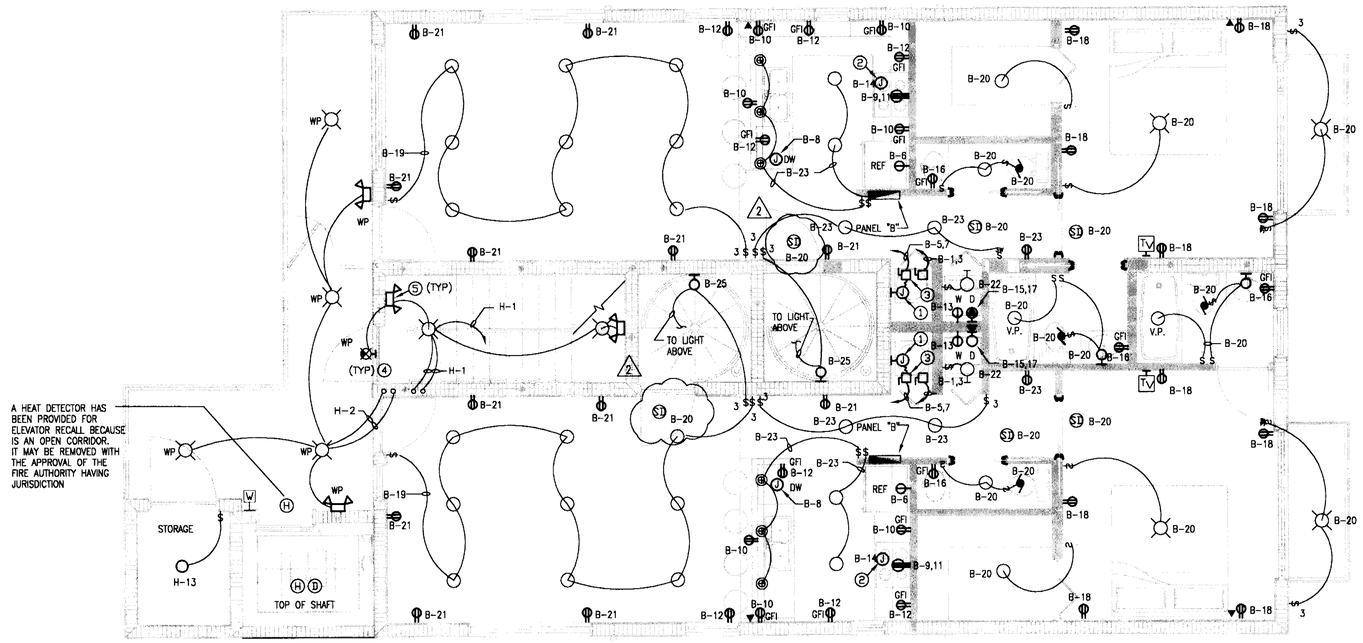

ELECTRICAL THIRD FLOOR PLAN

SCALE: 1/4" = 1'-0"

CODED NOTES:

1. J. BOX FOR 4.5KW, 240V, 1ø WATER HEATER
2. J. BOX FOR EXH. HOOD FAN/LIGHT
3. 2 30/NF DISC. NON-FUSED
4. TYPICAL SELF CONTAINED BATTERY OPERATED EXIT LIGHT CONNECTED AHEAD OF TIME CLOCK
5. TYPICAL SELF CONTAINED BATTERY OPERATED EMERGENCY LIGHT (WEATHER PROOF) CONNECTED AHEAD OF TIME CLOCK

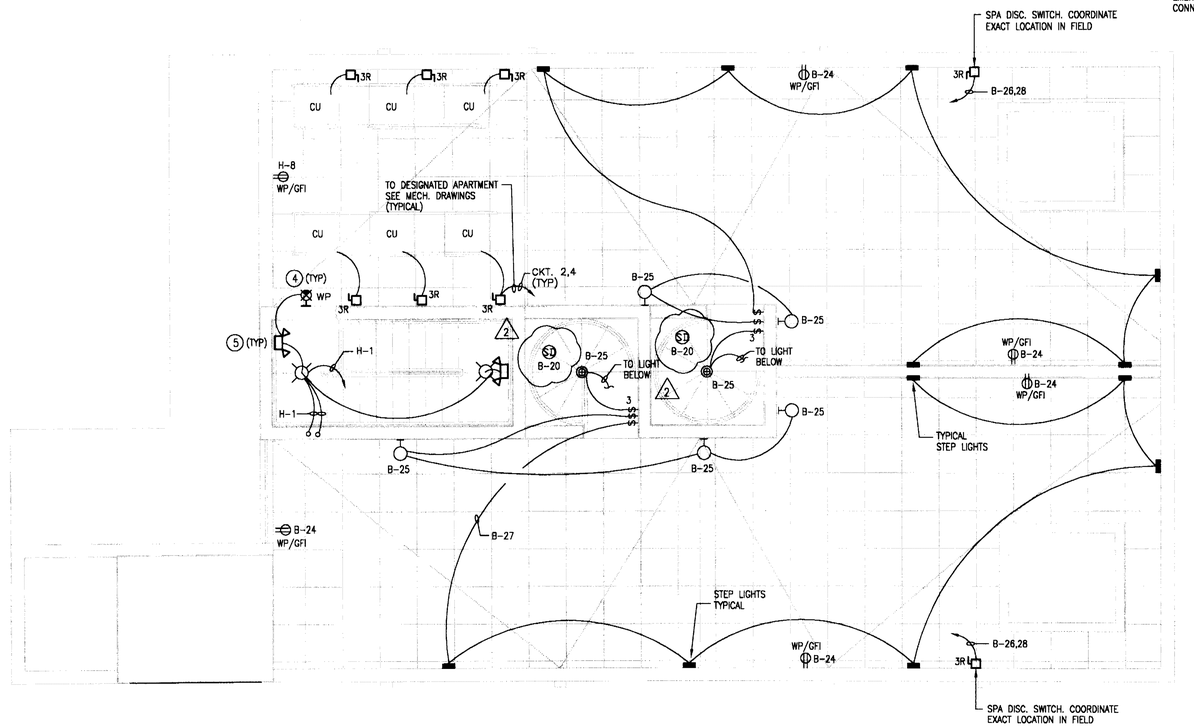

ELECTRICAL ROOF TERRACE PLAN

SCALE: 1/4" = 1'-0"

3DESIGN INC
ANTHONY LEON
ARCHITECTURE
AR0016752
4300 BISCAYNE BLVD. SUITE#604 MIAMI, FL 33137 T 305 438 9577 F 305 438 9578

DRAWN BY:

REVISIONS:

1. OWNER REV. 11-08-06
2. BLDG. DEPT. COMMENTS 01-09-07

SEAL

NEW BLDG FOR
1529 JEFFERSON AVE
MIAMI BEACH, FL
33139

OFFICE COPY
CITY OF MIAMI BEACH
PERMIT BY
BUILDING:
JUN 12 2007
ENGINEERING:
PUBLIC WORKS:
STRUCTURAL:
ACCESSIBILITY:

Innovative Engineering Group Inc. CA#6717
6532 N.W. 72nd Ave
Miami, FL 33166
305-888-9628
Sudhir K. Gupta, P.E.
Fla. Reg. No. 29189

E-2
JUNE 9, 2006

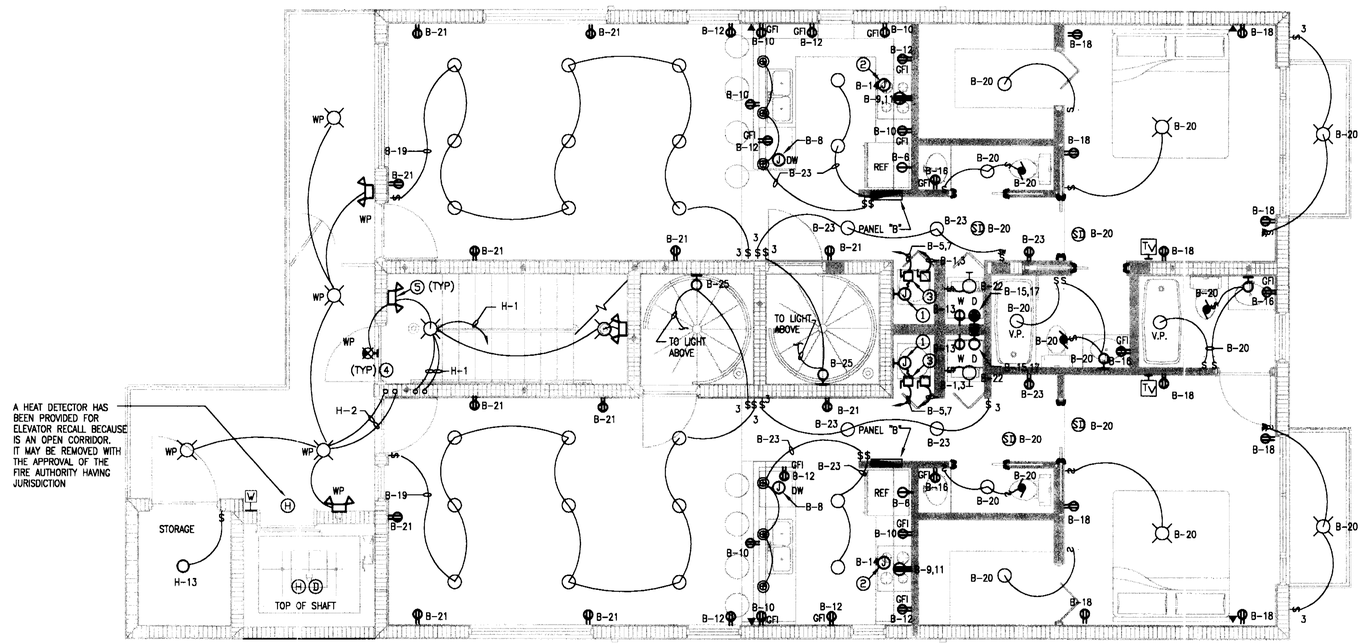

ELECTRICAL THIRD FLOOR PLAN

SCALE: 1/4" = 1'-0"

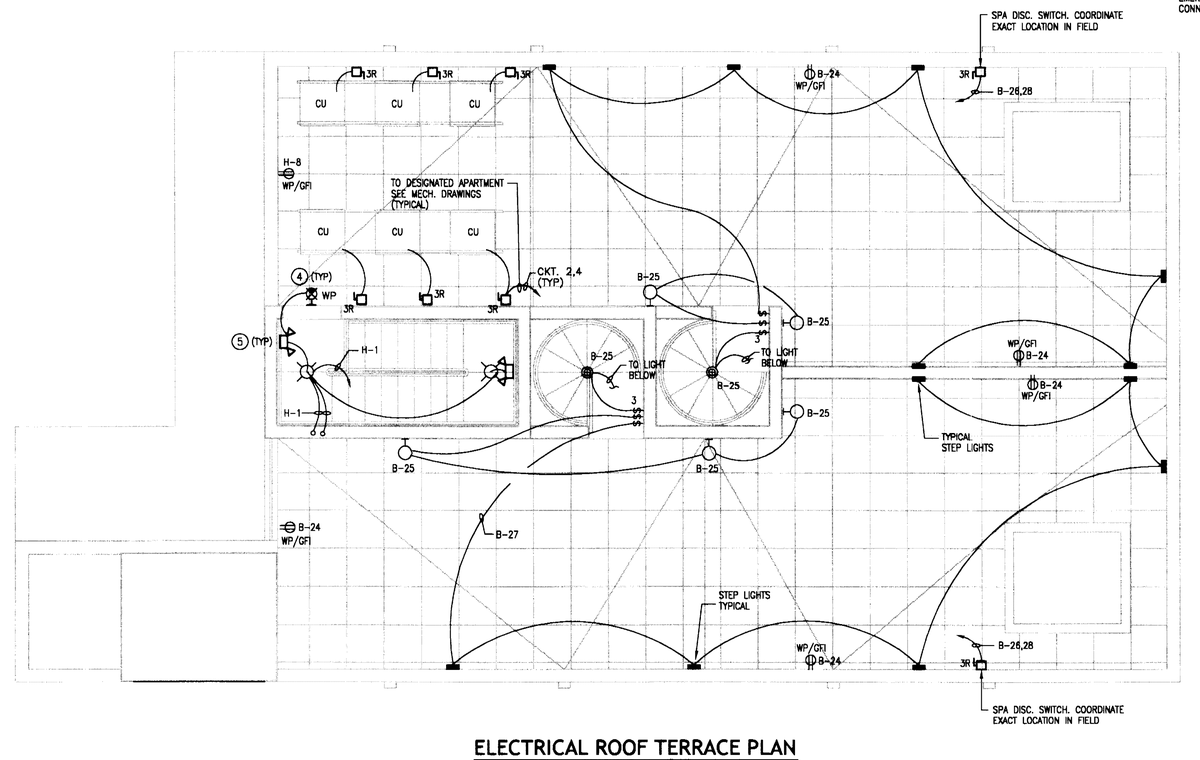

ELECTRICAL ROOF TERRACE PLAN

SCALE: 1/4" = 1'-0"

CODED NOTES:

1. J. BOX FOR 4.5KW, 240V, 1ø WATER HEATER
2. J. BOX FOR EXH. HOOD FAN/LIGHT
3. 2 30 DISC. NON-FUSED NF
4. TYPICAL SELF CONTAINED BATTERY OPERATED EXIT LIGHT CONNECTED AHEAD OF TIME CLOCK
5. TYPICAL SELF CONTAINED BATTERY OPERATED EMERGENCY LIGHT (WEATHER PROOF) CONNECTED AHEAD OF TIME CLOCK

DRAWN BY:

REVISIONS:

OWNER REV. 11-8-06

3DESIGN INC
ANTHONY LEON
ARCHITECTURE
AR0016752
4300 BISCAYNE BLVD. SUITE#604 MIAMI, FL 33137 T.305.438.9377 F.305.438.9378

SEAL

NEW BLGD
FOR
1529 JEFFERSON AVE
MIAMI BEACH, FL
33139

CITY OF MIAMI BEACH

APPROVED

11/14/06

Innovative Engineering Group Inc. CA#6717
5532 N.W. 72nd Ave
Miami, FL 33166
305-888-9626
Sudhir K. Gupta, P.E.
Fla. Reg. No. 29189

E-2

JUNE 9, 2006

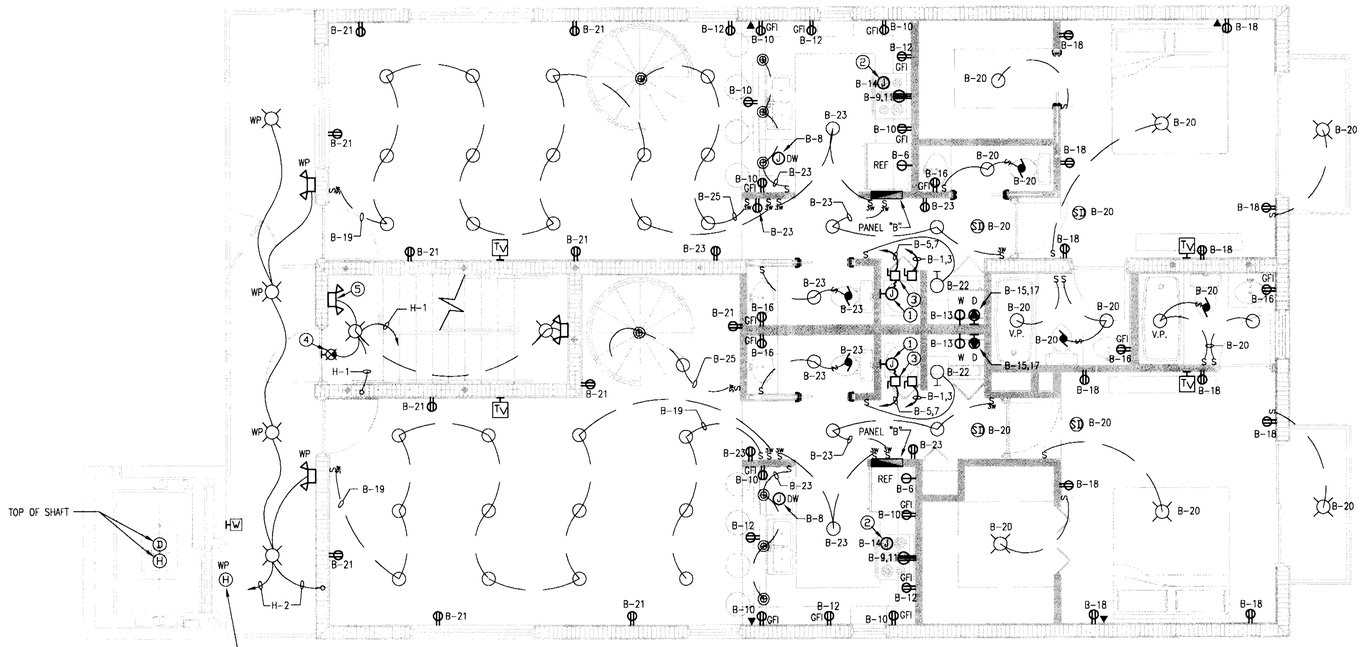

ELECTRICAL THIRD FLOOR PLAN

SCALE: 1/4" = 1'-0"

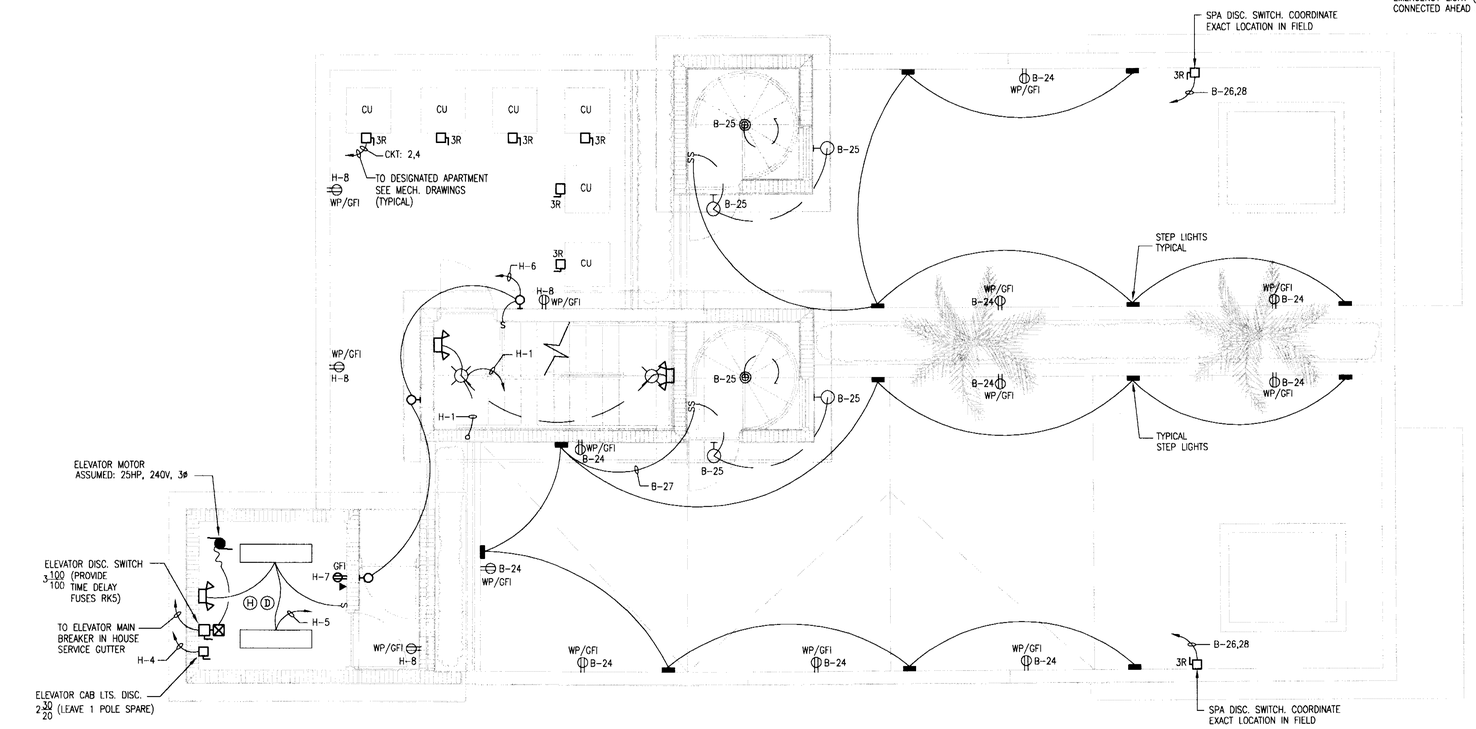

ELECTRICAL ROOF TERRACE PLAN

SCALE: 1/4" = 1'-0"

CODED NOTES:

1. J. BOX FOR 4.5KW, 240V, 1ø WATER HEATER
2. J. BOX FOR EXH. HOOD FAN/LIGHT
3. 2 30 DISC. NON-FUSED NF
4. TYPICAL SELF CONTAINED BATTERY OPERATED EXIT LIGHT (WEATHER PROOF) CONNECTED AHEAD OF TIME CLOCK
5. TYPICAL SELF CONTAINED BATTERY OPERATED EMERGENCY LIGHT (WEATHER PROOF) CONNECTED AHEAD OF TIME CLOCK

DRAWN BY:

REVISIONS:

3DESIGN INC.
ANTHONY LEON
AA0003569
ARCHITECTURE
1234 WASHINGTON AVE SUITE#207 MIAMI BEACH, FL 33139 T 305 531 5208 F 305 531 4915

SEAL

NEW BUILDING
FOR
1529 JEFFERSON AVE.
MIAMI BEACH, FL
33139

OFFICE COPY
CITY OF MIAMI BEACH
APPROVED FOR PERMIT BY
THE FOLLOWING:

BUILDING:
ZONING:
DRB/HPB:
CONCURRENCY:
PLUMBING:
ELECTRICAL:
MECHANICAL:
FIRE PREVENTION:
ENGINEERING:
PUBLIC WORKS:
STRUCTURAL:
ACCESSIBILITY:

CITY OF MIAMI BEACH
VOID

Innovative Engineering Group Inc. CA#6717
5532 N.W. 72nd Ave
Miami, FL 33166
305-888-9626
Sudhir K. Gupta, P.E.
Fla. Reg. No. 29199

6/15/06

E-2

JANUARY 24, 2006

EQUAL TO: SQ'D
TYPE: QO LOAD CENTER
SURFACE MOUNTED

PANEL "H" (NEMA 3R)
CU BUS/GND BUS (42K AIC)

VOLTAGE: 120/240V – 1ø–3W
2P–60A M.C.B SERVICE RATED

KVA	COND	WIRE	BKR.	POLE	DESCRIPTION	CKT.No.	CKT.No.	DESCRIPTION	POLE	BKR.	WIRE	COND	KVA
700	1/2	12	20	1	STAIR LTS	1	2	CORRIDOR LTS (*)	1	20	12	1/2	1000
400	1/2	12	20	1	ELEVATOR PIT LTS/RECS	3	4	ELEVATOR CAB LTS	1	20	12	1/2	700
200	1/2	12	20	1	ELEV. MACH.RM LTS	5	6	LIGHTING	1	20	12	1/2	500
200	1/2	12	20	1	ELEV. MACH.RM REC	7	8	RECEPTS	1	20	12	1/2	720
720	1/2	12	20	1	WALL A/C	9	10	TEL. BKBD	1	20	12	1/2	720
720	1/2	12	20	1	EXH. FAN	11	12	TV. BKBD	1	20	12	1/2	720
720	1/2	12	20	1	LTS.	13	14	FACP	1	20	12	1/2	720
–	–	–	–	–	SPACE	15	16	SPARE	1	20	–	–	–
–	–	–	–	–	SPACE	17	18	SPARE	1	20	–	–	–
–	–	–	–	–	SPACE	19	20	SPACE	–	–	–	–	–
–	–	–	–	–	SPACE	21	22	SPACE	–	–	–	–	–
–	–	–	–	–	SPACE	23	24	SPACE	–	–	–	–	–

(*) ON TIME CLOCK

LOAD: 6.6 KVA/240V= 27.4A

EQUAL TO: SQ'D
TYPE: QO LOAD CENTER
MOUNTING: FLUSH

PANEL "A"
(CU BUS/GND BUS) (10K AIC) 760 SQFT

VOLTAGE: 120/240V – 1ø–3W
125A M.L.O.

LOAD	COND	WIRE	BKR.	POLE	DESCRIPTION	CKT.No.	CKT.No.	DESCRIPTION	POLE	BKR.	WIRE	COND	LOAD
6624	3/4"	8	40	2	AHU (**)	1	2	CU (**)	2	20	10	3/4"	2616
–	–	–				3	4			–	–	–	–
4500	3/4"	10	30	2	WATER HEATER	5	6	REFRIGERATOR	1	20	12	1/2"	1400
–	–	–				7	8	D.W.	1	20	12	1/2"	1000
12000	1"	6	50	2	RANGE	9	10	SMALL APPLIANCES	1	20	12	1/2"	1500
						11	12	SMALL APPLIANCES	1	20	12	1/2"	1500
1500	1/2"	12	20	1	WASHER	13	14	HOOD/LIGHT	1	20	12	1/2"	(*)
5000	3/4"	10	30	2	DRYER	15	16	BATH RECS	1	20	12	1/2"	(*)
–	–	–				17	18	GENERAL LTS/RECS	1	15	14	1/2"	(*) △
(*)	1/2"	14	15	1	GENERAL LTS/RECS	19	20	GENERAL LTS/RECS	1	15	14	1/2"	(*) △
(*)	1/2"	14	15	1	GENERAL LTS/RECS	21	22	GENERAL LTS/RECS	1	15	14	1/2"	(*)
(*)	1/2"	14	15	1	GENERAL LTS/RECS	23	24	SPACE					
–	–	–	15	1	SPARE	25	26	SPACE					
–	–	–	20	1	SPARE	27	28	SPACE					
					SPACE	29	30	SPACE					

(*) PART OF THE 3W/SQFT LOAD
(**) PROVIDE HACR TYPE BREAKER
△ PROVIDE AFCI TYPE BREAKER

EQUAL TO: SQ'D
TYPE: QO LOAD CENTER
MOUNTING: FLUSH

PANEL "B"
(10K AIC) 760 SQFT

VOLTAGE: 120/240V – 1ø–3W
150A M.L.O.

LOAD	COND	WIRE	BKR.	POLE	DESCRIPTION	CKT.No.	CKT.No.	DESCRIPTION	POLE	BKR.	WIRE	COND	LOAD
6624	3/4"	8	40	2	AHU (**)	1	2	CU (**)	2	20	10	3/4"	2616
–	–	–				3	4			–	–	–	–
4500	3/4"	10	30	2	WATER HEATER	5	6	REFRIGERATOR	1	20	12	1/2"	1400
–	–	–				7	8	D.W	1	20	12	1/2"	1000
12000	1"	6	50	2	RANGE	9	10	SMALL APPLIANCES	1	20	12	1/2"	1500
						11	12	SMALL APPLIANCES	1	20	12	1/2"	1500
1500	1/2"	12	20	1	WASHER	13	14	HOOD/LIGHT	1	20	12	1/2"	(*)
5000	3/4"	10	30	2	DRYER	15	16	BATH RECS	1	20	12	1/2"	(*)
–	–	–				17	18	GENERAL LTS/RECS	1	15	14	1/2"	(*) △
(*)	1/2"	14	15	1	GENERAL LTS/RECS	19	20	GENERAL LTS/RECS	1	15	14	1/2"	(*) △
(*)	1/2"	14	15	1	GENERAL LTS/RECS	21	22	GENERAL LTS/RECS	1	15	14	1/2"	(*)
(*)	1/2"	14	15	1	GENERAL LTS/RECS	23	24	GENERAL LTS/RECS	1	20	12	1/2"	(*)
(*)	1/2"	14	15	1	GENERAL LTS/RECS	25	26	SPA	2	50	6	1"	8000
(*)	1/2"	14	15	1	GENERAL LTS/RECS	27	28						
–	–	–	15	1	SPARE	29	30	SPACE	–	–	–	–	–
–	–	–	20	1	SPARE	31	32	SPACE	–	–	–	–	–
–	–	–	–	–	SPACE	33	34	SPACE	–	–	–	–	–
–	–	–	–	–	SPACE	35	36	SPACE	–	–	–	–	–

(*) PART OF THE 3W/SQFT LOAD
(**) PROVIDE HACR TYPE BREAKER
△ PROVIDE AFCI TYPE BREAKER

LOAD ANALYSIS

BASED ON 120/240V – 1ø – 3 WIRE

1). PANEL "A"

760 SQFT X 3 VA/SQFT	2,280 VA
OTHER LOADS	28,400 VA
	30,680 VA

DEMAND LOAD

1st 10,000 VA @ 100%	10,000 VA
20,680 VA @ 40%	8,272 VA
A/C @ 65% HEAT	4,608 VA
	22,880 VA / 240V = 95.3 A

2). PANEL "B"

760 SQFT X 3 VA/SQFT	2,280 VA
OTHER LOADS	36,400 VA
	38,680 VA

DEMAND LOAD

1st 10,000 VA @ 100%	10,000 VA
28,680 VA @ 40%	11,472 VA
A/C @ 65% HEAT	4,608 VA
	26,080 VA / 240V = 108.7 A

METER CENTER LOAD ANALYSIS

BASED ON 120/240V – 1ø – 3 WIRE

(4) PANEL "A"= 4 X 37,304 VA = 149,216 VA
(2) PANEL "B"= 2 X 45,304 VA = 90,608 VA
239,824 VA

239,824 VA X (.44) D.F. = 105,523 VA
105,523 VA / 240V = 439.7 A

HOUSE GUTTER LOAD ANALYSIS

BASED ON 120/240V – 3ø HI-LEG – 4 WIRE

SERVICE GUTTER:

	øA	øB (HI-LEG)	øC	N
ELEVATOR (25HP, 240V, 3ø)	68.0 A	68.0 A	68.0 A	
HOUSE PANEL "H"	27.4 A	—	27.4 A	27.4 A
	95.4 A	68.0 A	95.4 A	27.4 A

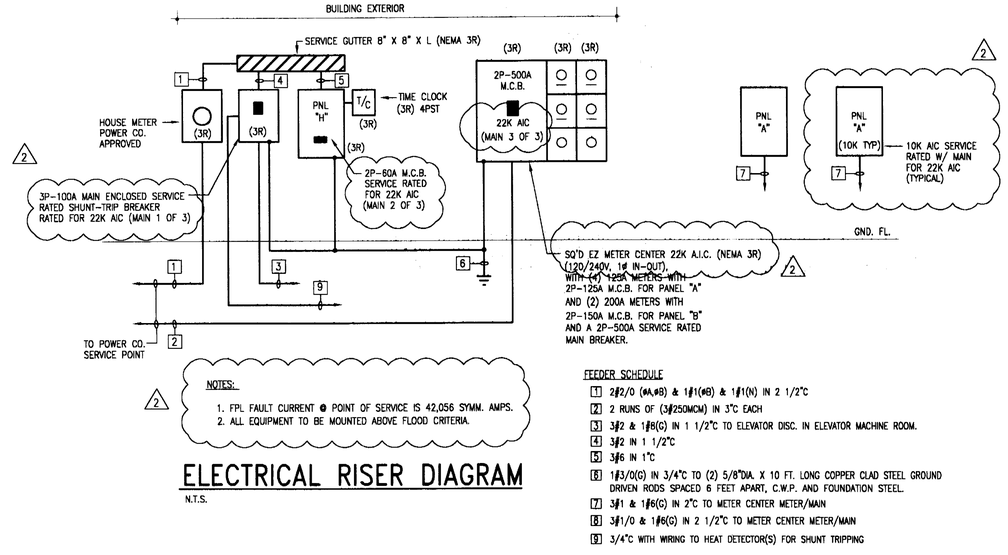

NOTES:

1. FPL FAULT CURRENT @ POINT OF SERVICE IS 42,056 SYMM. AMPS.
2. ALL EQUIPMENT TO BE MOUNTED ABOVE FLOOD CRITERIA.

ELECTRICAL RISER DIAGRAM

N.T.S.

FEEDER SCHEDULE

1. 2ø2/0 (øA,øB) & 1ø1(øB) & 1ø1(N) IN 2 1/2"C
2. 2 RUNS OF (3ø250MCM) IN 3"C EACH
3. 3ø2 & 1ø8(G) IN 1 1/2"C TO ELEVATOR DISC. IN ELEVATOR MACHINE ROOM.
4. 3ø2 IN 1 1/2"C
5. 3ø6 IN 1"C
6. 1ø3/0(G) IN 3/4"C TO (2) 5/8"DIA. X 10 FT. LONG COPPER CLAD STEEL GROUND DRIVEN RODS SPACED 6 FEET APART, C.W.P. AND FOUNDATION STEEL.
7. 3ø1 & 1ø6(G) IN 2"C TO METER CENTER METER/MAIN
8. 3ø1/0 & 1ø6(G) IN 2 1/2"C TO METER CENTER METER/MAIN
9. 3/4"C WITH WIRING TO HEAT DETECTOR(S) FOR SHUNT TRIPPING

FAULT CURRENT CALCULATIONS

LENGTH TO FPL SERVICE POINT 210 FEET
SHORT CIRCUIT CURRENT @ FPL POINT OF SERVICE 40,526 SYMM. AMPS (PER FPL LETTER)

A.) METER CENTER:

$F = \frac{2 \times 210\ FT \times 40{,}526\ A}{29{,}800 \times 240\ V} = 2.34$

$M = \frac{1}{1+F} = \frac{1}{1+2.34} = 0.299$

I @ FAULT = 40,526 x .299 = 12,117 SYMM. AMPS

B.) SERVICE GUTTER:

3ø SERVICE: $F = \frac{1.73 \times 210\ FT \times 40{,}526\ A}{9090 \times 240\ V} = 6.75$

$M = \frac{1}{1+F} = \frac{1}{1+6.75} = 0.129$

I @ FAULT = 40,526 x 0.129 = 5,227 SYMM. AMPS

1ø SERVICE : $F = \frac{2 \times 210\ FT \times 40{,}526}{9090 \times 240V} = 7.8$

$M = \frac{1}{1+F} = \frac{1}{1+7.80} = 0.114$

I @ FAULT = 40,526 x 0.114 = 4,619.9 SYMM. AMPS

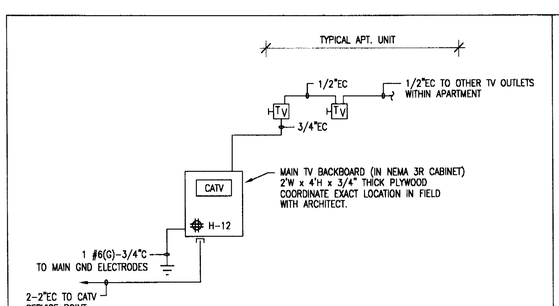

CATV RISER DIAGRAM

N.T.S.

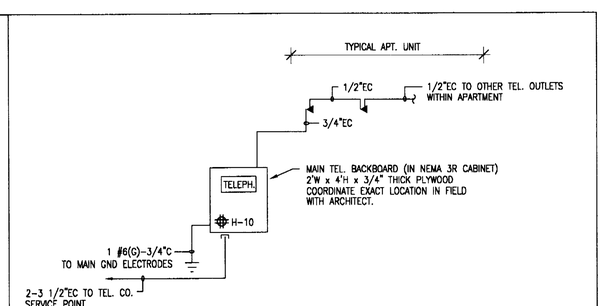

TELEPHONE RISER DIAGRAM

N.T.S.

DRAWN BY:

REVISIONS:
1 OWNER REV. 11–08–06
2 BLDG. DEPT. COMMENTS 01–09–07

3D DESIGN
ARCHITECTURE
ANTHONY LEON
AR0026752
4300 BISCAYNE BLVD SUITE#604 MIAMI, FL 33137 T.305.438.9577 F.305.438.9578

SEAL

NEW BLDG FOR
1529 JEFFERSON AVE
MIAMI BEACH, FL
33139

OFFICE COPY
CITY OF MIAMI BEACH
APPROVED FOR PERMIT BY PLANNING:
JUN 12 2007
5/25/07
FIRE MARSHAL:
ENGINEERING:
PUBLIC WORKS:
STRUCTURAL:
ACCESSIBILITY:

Innovative Engineering Group Inc. CA#6717
5532 N.W. 72nd Ave
Miami, FL 33166
305–888–9626
Sudhir K. Gupta, P.E.
Fla. Reg. No. 29189

E-3
JUNE 9, 2006

EQUAL TO: SQ'D
TYPE: QO LOAD CENTER
SURFACE MOUNTED

PANEL "H" (NEMA 3R)
CU BUS/GND BUS (42K AIC)

VOLTAGE: 120/240V – 1ø–3W
2P–60A M.C.B SERVICE RATED

KVA	COND	WIRE	BKR.	POLE	DESCRIPTION	CKT.No.	CKT.No.	DESCRIPTION	POLE	BKR.	WIRE	COND	KVA
700	1/2	12	20	1	STAIR LTS	1	2	CORRIDOR LTS (*)	1	20	12	1/2	1000
400	1/2	12	20	1	ELEVATOR PIT LTS/RECS	3	4	ELEVATOR CAB LTS	1	20	12	1/2	700
200	1/2	12	20	1	ELEV. MACH.RM LTS	5	6	LIGHTING	1	20	12	1/2	500
200	1/2	12	20	1	ELEV. MACH.RM REC	7	8	RECEPTS	1	20	12	1/2	720
720	1/2	12	20	1	WALL A/C	9	10	TEL. BKBD	1	20	12	1/2	720
720	1/2	12	20	1	EXH. FAN	11	12	TV. BKBD	1	20	12	1/2	720
720	1/2	12	20	1	LTS.	13	14	FACP	1	20	12	1/2	720
–	–	–	–	–	SPACE	15	16	SPARE	1	20	–	–	–
–	–	–	–	–	SPACE	17	18	SPARE	1	20	–	–	–
–	–	–	–	–	SPACE	19	20	SPACE	–	–	–	–	–
–	–	–	–	–	SPACE	21	22	SPACE	–	–	–	–	–
–	–	–	–	–	SPACE	23	24	SPACE	–	–	–	–	–

(*) ON TIME CLOCK

LOAD: 6.6 KVA/240V= 27.4A

EQUAL TO: SQ'D
TYPE: QO LOAD CENTER
MOUNTING: FLUSH

PANEL "A"
(CU BUS/GND BUS) (10K AIC) 760 SQFT

VOLTAGE: 120/240V – 1ø–3W
125A M.L.O.

LOAD	COND	WIRE	BKR.	POLE	DESCRIPTION	CKT.No.	CKT.No.	DESCRIPTION	POLE	BKR.	WIRE	COND	LOAD	
6624	3/4"	8	40	2	AHU (**)	1	2	CU (**)	2	20	10	3/4"	2616	
–	–	–				3	4			–	–	–	–	
4500	3/4"	10	30	2	WATER HEATER	5	6	REFRIGERATOR	1	20	12	1/2"	1400	
–	–	–				7	8	D.W.	1	20	12	1/2"	1000	
12000	1"	6	50	2	RANGE	9	10	SMALL APPLIANCES	1	20	12	1/2"	1500	
						11	12	SMALL APPLIANCES	1	20	12	1/2"	1500	
1500	1/2"	12	20	1	WASHER	13	14	HOOD/LIGHT	1	20	12	1/2"	(*)	
5000	3/4"	10	30	2	DRYER	15	16	BATH RECS	1	20	12	1/2"	(*)	
–	–	–				17	18	GENERAL LTS/RECS	1	15	14	1/2"	(*)	△
(*)	1/2"	14	15	1	GENERAL LTS/RECS	19	20	GENERAL LTS/RECS	1	15	14	1/2"	(*)	△
(*)	1/2"	14	15	1	GENERAL LTS/RECS	21	22	GENERAL LTS/RECS	1	15	14	1/2"	(*)	
–	–	–	15	1	SPARE	25	26	SPACE						
–	–	–	15	1	SPARE	27	28	SPACE						
			20	1	SPACE	29	30	SPACE						

(*) PART OF THE 3W/SQFT LOAD
(**) PROVIDE HACR TYPE BREAKER
△ PROVIDE AFCI TYPE BREAKER

EQUAL TO: SQ'D
TYPE: QO LOAD CENTER
MOUNTING: FLUSH

PANEL "B"
(10K AIC) 760 SQFT

VOLTAGE: 120/240V – 1ø–3W
150A M.L.O.

LOAD	COND	WIRE	BKR.	POLE	DESCRIPTION	CKT.No.	CKT.No.	DESCRIPTION	POLE	BKR.	WIRE	COND	LOAD	
6624	3/4"	8	40	2	AHU (**)	1	2	CU (**)	2	20	10	3/4"	2616	
–	–	–				3	4			–	–	–	–	
4500	3/4"	10	30	2	WATER HEATER	5	6	REFRIGERATOR	1	20	12	1/2"	1400	
–	–	–				7	8	D.W	1	20	12	1/2"	1000	
12000	1"	6	50	2	RANGE	9	10	SMALL APPLIANCES	1	20	12	1/2"	1500	
						11	12	SMALL APPLIANCES	1	20	12	1/2"	1500	
1500	1/2"	12	20	1	WASHER	13	14	HOOD/LIGHT	1	20	12	1/2"	(*)	
5000	3/4"	10	30	2	DRYER	15	16	BATH RECS	1	20	12	1/2"	(*)	
–	–	–				17	18	GENERAL LTS/RECS	1	15	14	1/2"	(*)	△
(*)	1/2"	14	15	1	GENERAL LTS/RECS	19	20	GENERAL LTS/RECS	1	15	14	1/2"	(*)	△
(*)	1/2"	14	15	1	GENERAL LTS/RECS	21	22	GENERAL LTS/RECS	1	15	14	1/2"	(*)	
(*)	1/2"	14	15	1	GENERAL LTS/RECS	23	24	GENERAL LTS/RECS	1	20	12	1/2"	(*)	
(*)	1/2"	14	15	1	GENERAL LTS/RECS	25	26	SPA	2	50	6	1"	8000	
(*)	1/2"	14	15	1	GENERAL LTS/RECS	27	28							
–	–	–	15	1	SPARE	29	30	SPACE	–	–	–	–	–	
–	–	–	20	1	SPARE	31	32	SPACE	–	–	–	–	–	
–	–	–	–	–	SPACE	33	34	SPACE	–	–	–	–	–	
–	–	–	–	–	SPACE	35	36	SPACE	–	–	–	–	–	

(*) PART OF THE 3W/SQFT LOAD
(**) PROVIDE HACR TYPE BREAKER
△ PROVIDE AFCI TYPE BREAKER

LOAD ANALYSIS

BASED ON 120/240V – 1ø – 3 WIRE

1). PANEL "A"

760 SQFT X 3 VA/SQFT	2,280 VA
OTHER LOADS	28,400 VA
	30,680 VA
DEMAND LOAD	
1st 10,000 VA @ 100%	10,000 VA
20,680 VA @ 40%	8,272 VA
A/C @ 65% HEAT	4,608 VA
	22,880 VA / 240V = 95.3 A

2). PANEL "B"

760 SQFT X 3 VA/SQFT	2,280 VA
OTHER LOADS	36,400 VA
	38,680 VA
DEMAND LOAD	
1st 10,000 VA @ 100%	10,000 VA
28,680 VA @ 40%	11,472 VA
A/C @ 65% HEAT	4,608 VA
	26,080 VA / 240V = 108.7 A

METER CENTER LOAD ANALYSIS

BASED ON 120/240V – 1ø – 3 WIRE

(4) PANEL "A"= 4 X 37,304 VA = 149,216 VA
(2) PANEL "B"= 2 X 45,304 VA = 90,608 VA
239,824 VA

239,824 VA X (.44) D.F. = 105,523 VA
105,523 VA / 240V = 439.7 A

HOUSE GUTTER LOAD ANALYSIS

BASED ON 120/240V – 3ø HI-LEG – 4 WIRE

SERVICE GUTTER:

	øA	øB (HI-LEG)	øC	N
ELEVATOR (25HP, 240V, 3ø)	68.0 A	68.0 A	68.0 A	
HOUSE PANEL "H"	27.4 A	–	27.4 A	27.4 A
	95.4 A	68.0 A	95.4 A	27.4 A

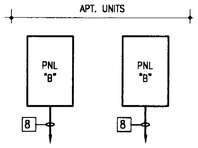

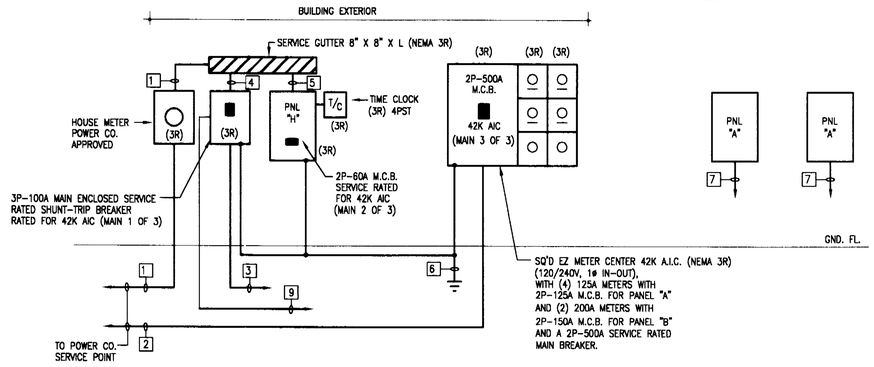

NOTES:

1. ENGINEER ASSUMED 42K A.I.C. CONTRACTOR SHALL COORDINATE ACTUAL FAULT CURRENT WITH F.P.L. EQUIPMENT INSTALLED SHALL WITHSTAND FPL'S AVAILABLE FAULT CURRENT.
2. ALL EQUIPMENT TO BE MOUNTED ABOVE FLOOD CRITERIA.

ELECTRICAL RISER DIAGRAM
N.T.S.

FEEDER SCHEDULE

1. 2#2/0 (#A,#B) & 1#1(#B) & 1#1(N) IN 2 1/2"C
2. 2 RUNS OF (3#250 MCM) IN 3"C EACH
3. 3#2 & 1#6(G) IN 1 1/2"C TO ELEVATOR DISC. IN ELEVATOR MACHINE ROOM.
4. 3#2 IN 1 1/2"C
5. 3#6 IN 1"C
6. 1#3/0(G) IN 3/4"C TO (2) 5/8"DIA. X 10 FT. LONG COPPER CLAD STEEL GROUND DRIVEN RODS SPACED 6 FEET APART, C.W.P. AND FOUNDATION STEEL.
7. 3#1 & 1#6(G) IN 2"C TO METER CENTER METER/MAIN
8. 3#1/0 & 1#6(G) IN 2 1/2"C TO METER CENTER METER/MAIN
9. 3/4"C WITH WIRING TO HEAT DETECTOR(S) FOR SHUNT TRIPPING

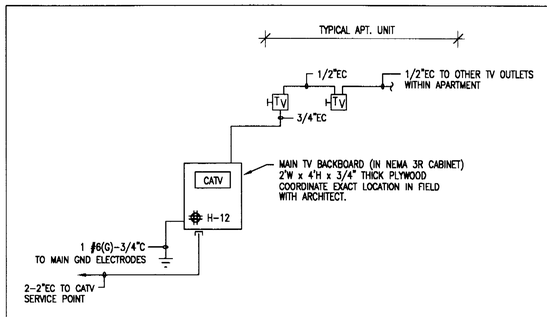

CATV RISER DIAGRAM
N.T.S.

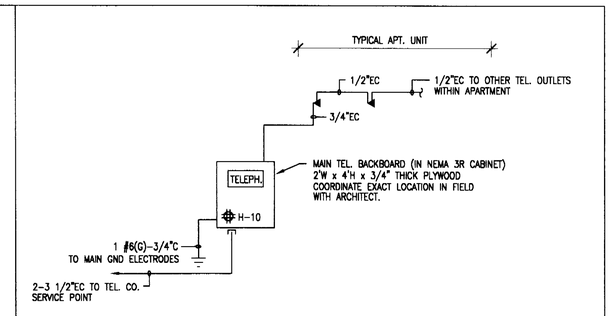

TELEPHONE RISER DIAGRAM
N.T.S.

DRAWN BY:

REVISIONS:
OWNER REV. 11-6-06

3DESIGN INC
ANTHONY LEON
ARCHITECTURE
AR0006752
4300 BISCAYNE BLVD. SUITE#604 MIAMI, FL 33137 T.305.438.9377 F.305.438.9378

SEAL

NEW BLGD
FOR
1529 JEFFERSON AVE
MIAMI BEACH, FL
33139

CITY OF MIAMI BEACH
APPROVED

11/14/06

Innovative Engineering Group Inc. CA#6717
5532 N.W. 72nd Ave
Miami, FL 33166
305-888-9626
Sudhir K. Gupta, P.E.
Fla. Reg. No. 29189

E-3
JUNE 9, 2006

EQUAL TO: SQ'D
TYPE: QO LOAD CENTER
SURFACE MOUNTED

PANEL "H" (NEMA 3R)
CU BUS/GND BUS (42K AIC)

VOLTAGE: 120/240V - 1ø-3W
2P-60A M.C.B SERVICE RATED

KVA	COND	WIRE	BKR.	POLE	DESCRIPTION	CKT.No.	CKT.No.	DESCRIPTION	POLE	BKR.	WIRE	COND	KVA
700	1/2	12	20	1	STAIR LTS	1	2	CORRIDOR LTS (*)	1	20	12	1/2	1000
400	1/2	12	20	1	ELEVATOR PIT LTS/RECS	3	4	ELEVATOR CAB LTS	1	20	12	1/2	700
200	1/2	12	20	1	ELEV. MACH.RM LTS	5	6	LIGHTING	1	20	12	1/2	500
200	1/2	12	20	1	ELEV. MACH.RM REC	7	8	RECEPTS	1	20	12	1/2	720
–	–	–	20	1	SPARE	9	10	TEL. BKBD	1	20	12	1/2	720
–	–	–	20	1	SPARE	11	12	TV. BKBD	1	20	12	1/2	720
–	–	–	20	1	SPARE	13	14	FACP	1	20	12	1/2	720
–	–	–	–	–	SPACE	15	16	SPACE	–	–	–	–	–
–	–	–	–	–	SPACE	17	18	SPACE	–	–	–	–	–

(*) ON TIME CLOCK

LOAD: 6.6 KVA/240V= 27.4A

EQUAL TO: SQ'D
TYPE: QO LOAD CENTER
MOUNTING: FLUSH

PANEL "A" (10K AIC) 760 SQFT
(CU BUS/GND BUS)

VOLTAGE: 120/240V - 1ø-3W
125A M.L.O.

LOAD	COND	WIRE	BKR.	POLE	DESCRIPTION	CKT.No.	CKT.No.	DESCRIPTION	POLE	BKR.	WIRE	COND	LOAD	
6624	3/4"	8	40	2	AHU (**)	1	2	CU (**)	2	20	10	3/4"	2616	
–	–	–				3	4			–	–	–	–	
4500	3/4"	10	30	2	WATER HEATER	5	6	REFRIGERATOR	1	20	12	1/2"	1400	
–	–	–				7	8	D.W.	1	20	12	1/2"	1000	
12000	1"	6	50	2	RANGE	9	10	SMALL APPLIANCES	1	20	12	1/2"	1500	
						11	12	SMALL APPLIANCES	1	20	12	1/2"	1500	
1500	1/2"	12	20	1	WASHER	13	14	HOOD/LIGHT	1	20	12	1/2"	(*)	
5000	3/4"	10	30	2	DRYER	15	16	BATH RECS	1	20	12	1/2"	(*)	
–	–	–				17	18	GENERAL LTS/RECS	1	15	14	1/2"	(*)	△
(*)	1/2"	14	15	1	GENERAL LTS/RECS	19	20	GENERAL LTS/RECS	1	15	14	1/2"	(*)	△
(*)	1/2"	14	15	1	GENERAL LTS/RECS	21	22	GENERAL LTS/RECS	1	15	14	1/2"	(*)	
(*)	1/2"	14	15	1	GENERAL LTS/RECS	23	24	SPACE						
–	–	–	15	1	SPARE	25	26	SPACE						
–	–	–	20	1	SPARE	27	28	SPACE						
					SPACE	29	30	SPACE						

(*) PART OF THE 3W/SQFT LOAD
(**) PROVIDE HACR TYPE BREAKER
△ PROVIDE AFCI TYPE BREAKER

EQUAL TO: SQ'D
TYPE: QO LOAD CENTER
MOUNTING: FLUSH

PANEL "B" (10K AIC) 760 SQFT

VOLTAGE: 120/240V - 1ø-3W
150A M.L.O.

LOAD	COND	WIRE	BKR.	POLE	DESCRIPTION	CKT.No.	CKT.No.	DESCRIPTION	POLE	BKR.	WIRE	COND	LOAD	
6624	3/4"	8	40	2	AHU (**)	1	2	CU (**)	2	20	10	3/4"	2616	
–	–	–				3	4			–	–	–	–	
4500	3/4"	10	30	2	WATER HEATER	5	6	REFRIGERATOR	1	20	12	1/2"	1400	
–	–	–				7	8	D.W	1	20	12	1/2"	1000	
12000	1"	6	50	2	RANGE	9	10	SMALL APPLIANCES	1	20	12	1/2"	1500	
						11	12	SMALL APPLIANCES	1	20	12	1/2"	1500	
1500	1/2"	12	20	1	WASHER	13	14	HOOD/LIGHT	1	20	12	1/2"	(*)	
5000	3/4"	10	30	2	DRYER	15	16	BATH RECS	1	20	12	1/2"	(*)	
–	–	–				17	18	GENERAL LTS/RECS	1	15	14	1/2"	(*)	△
(*)	1/2"	14	15	1	GENERAL LTS/RECS	19	20	GENERAL LTS/RECS	1	15	14	1/2"	(*)	△
(*)	1/2"	14	15	1	GENERAL LTS/RECS	21	22	GENERAL LTS/RECS	1	15	14	1/2"	(*)	
(*)	1/2"	14	15	1	GENERAL LTS/RECS	23	24	GENERAL LTS/RECS	1	20	12	1/2"	(*)	
(*)	1/2"	14	15	1	GENERAL LTS/RECS	25	26	SPA	2	50	6	1"	8000	
(*)	1/2"	14	15	1	GENERAL LTS/RECS	27	28							
–	–	–	15	1	SPARE	29	30	SPACE	–	–	–	–	–	
–	–	–	20	1	SPARE	31	32	SPACE	–	–	–	–	–	
–	–	–	–	–	SPACE	33	34	SPACE	–	–	–	–	–	
–	–	–	–	–	SPACE	35	36	SPACE	–	–	–	–	–	

(*) PART OF THE 3W/SQFT LOAD
(**) PROVIDE HACR TYPE BREAKER
△ PROVIDE AFCI TYPE BREAKER

LOAD ANALYSIS

BASED ON 120/240V - 1ø - 3 WIRE

1). PANEL "A"

760 SQFT X 3 VA/SQFT	2,280 VA
OTHER LOADS	28,400 VA
	30,680 VA
DEMAND LOAD	
1st 10,000 VA @ 100%	10,000 VA
20,680 VA @ 40%	8,272 VA
A/C @ 65% HEAT	4,608 VA
	22,880 VA / 240V = 95.3 A

2). PANEL "B"

760 SQFT X 3 VA/SQFT	2,280 VA
OTHER LOADS	36,400 VA
	38,680 VA
DEMAND LOAD	
1st 10,000 VA @ 100%	10,000 VA
28,680 VA @ 40%	11,472 VA
A/C @ 65% HEAT	4,608 VA
	26,080 VA / 240V = 108.7 A

METER CENTER LOAD ANALYSIS

BASED ON 120/240V - 1ø - 3 WIRE

(4) PANEL "A"= 4 X 37,304 VA = 149,216 VA
(2) PANEL "B"= 2 X 45,304 VA = 90,608 VA
239,824 VA

239,824 VA X (.44) D.F. = 105,523 VA
105,523 VA / 240V = 439.7 A

HOUSE GUTTER LOAD ANALYSIS

BASED ON 120/240V - 3ø HI-LEG - 4 WIRE

SERVICE GUTTER:	øA	øB (HI-LEG)	øC	N
ELEVATOR (25HP, 240V, 3ø)	68.0 A	68.0 A	68.0 A	
HOUSE PANEL "H"	27.4 A	—	27.4 A	27.4 A
	95.4 A	68.0 A	95.4 A	27.4 A

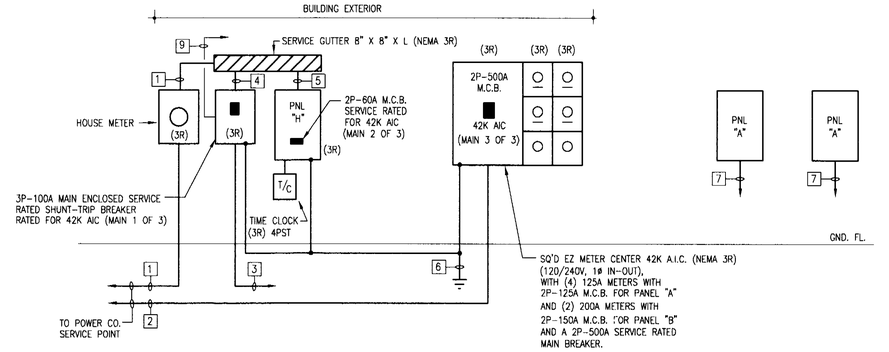

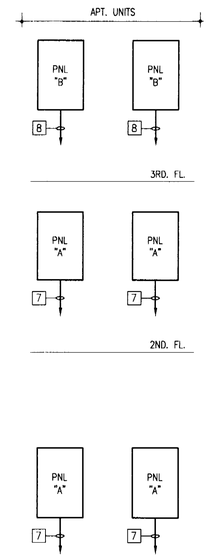

NOTES:

1. ENGINEER ASSUMED 42K A.I.C. CONTRACTOR SHALL COORDINATE ACTUAL FAULT CURRENT WITH F.P.L. EQUIPMENT INSTALLED SHALL WITHSTAND FPL'S AVAILABLE FAULT CURRENT.
2. ALL EQUIPMENT TO BE MOUNTED ABOVE FLOOD CRITERIA.

ELECTRICAL RISER DIAGRAM

N.T.S.

FEEDER SCHEDULE

1. 2#2/0 (#A,#B) & 1#1(#B) & 1#1(N) IN 2 1/2"C
2. 2 RUNS OF (3#250 MCM) IN 3"C EACH
3. 3#2 & 1#6(G) IN 1 1/2"C TO ELEVATOR DISC. IN ELEVATOR MACHINE ROOM.
4. 3#2 IN 1 1/2"C
5. 3#6 IN 1"C
6. 1#3/0(G) IN 3/4"C TO (2) 5/8"DIA. X 10 FT. LONG COPPER CLAD STEEL GROUND DRIVEN RODS SPACED 6 FEET APART, C.W.P. AND FOUNDATION STEEL.
7. 3#1 & 1#6(G) IN 2"C TO METER CENTER METER/MAIN
8. 3#1/0 & 1#6(G) IN 2 1/2"C TO METER CENTER METER/MAIN
9. 3/4"C WITH WIRING TO HEAT DETECTOR(S) FOR SHUNT TRIPPING

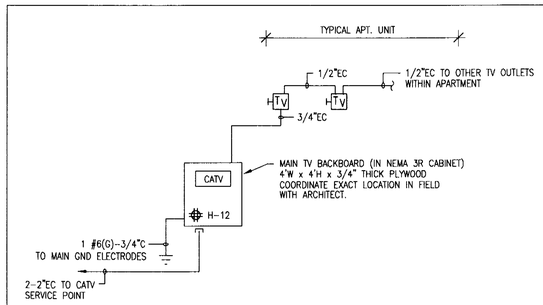

CATV RISER DIAGRAM

N.T.S.

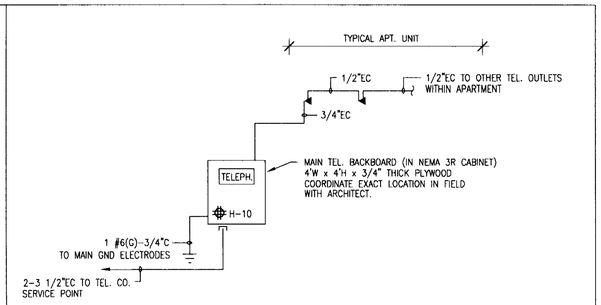

TELEPHONE RISER DIAGRAM

N.T.S.

2DESIGN INC
ANTHONY LEON
AA0003569
ARCHITECTURE
1234 WASHINGTON AVE. SUITE#207 MIAMI BEACH, FL 33139 T.305.531.5208 F.305.531.4515

DRAWN BY:

REVISIONS:

SEAL

NEW BUILDING
FOR
1529 JEFFERSON AVE.
MIAMI BEACH, FL
33139

OFFICE COPY
CITY OF MIAMI BEACH
APPROVED FOR PERMIT BY
THE FOLLOWING:

BUILDING:
ZONING:
DRB/HPB:
CONCURRENCY:
PLUMBING:
ELECTRICAL:
MECHANICAL:
FIRE PREVENTION:
ENGINEERING:
PUBLIC WORKS:
STRUCTURAL:
ACCESSIBILITY:
ELEVATOR:

CITY OF MIAMI BEACH

Innovative Engineering Group Inc. CA#6717
5532 N.W. 72nd Ave
Miami, FL 33166
305-888-9626
Sudhir K. Gupta, P.E.
Fla. Reg. No. 29169

6/7/06

E-3

JANUARY 24, 2006



System No. W-L-1095
F Ratings - 1 & 2 Hr (See Item 1)
T Ratings - 1 & 2 Hr (See Item 3)
L Rating At Ambient - Less Than 1 CFM/Sq Ft
L Rating At 400 F - 4 CFM/Sq Ft

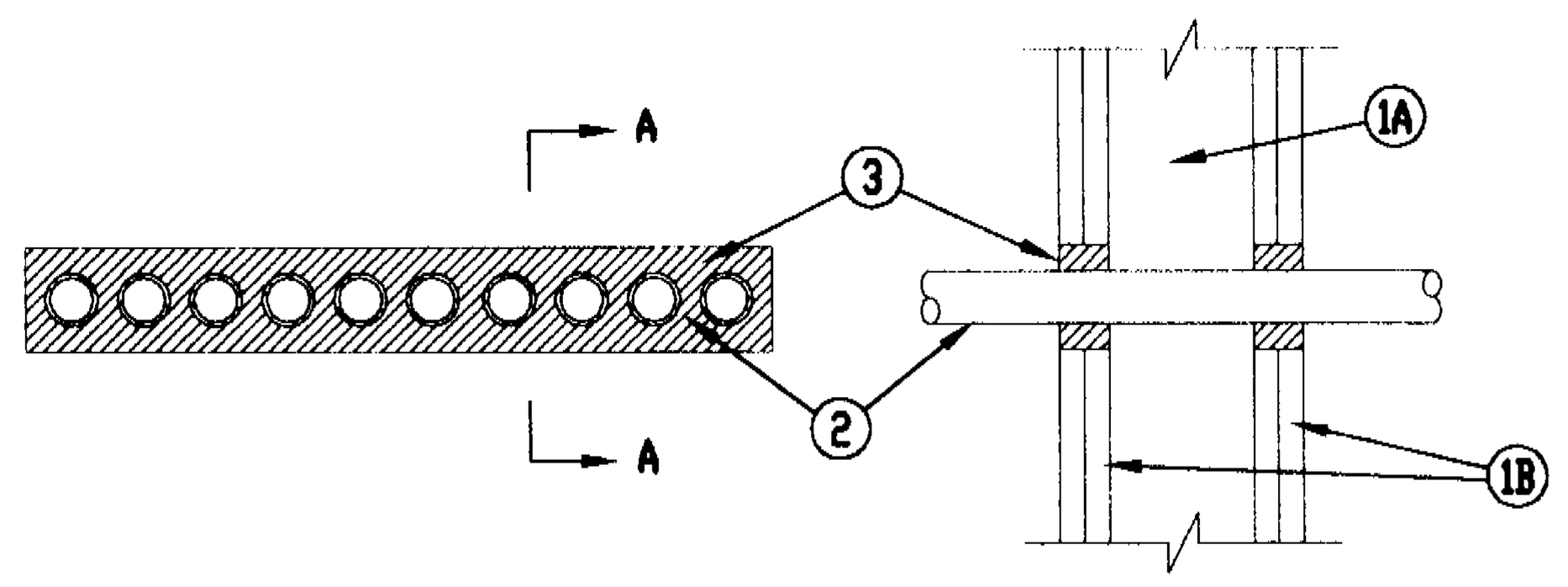

1. Wall Assembly – The 1 or 2 hr fire-rated gypsum wallboard/stud wall assembly shall be constructed of the materials and in the manner described in the individual U300 or U400 Series Wall and Partition Designs in the UL Fire Resistance Directory and shall include the following construction features:
   A. Studs – Wall framing may consist of either wood studs or steel channel studs. Wood studs to consist of nom 2 by 4 in. lumber spaced 16 in. OC. Steel studs to be min 2-1/2 in. wide and spaced max 24 in. OC.
   B. Wallboard, Gypsum* – 5/8 in. thick, 4 ft wide with square or tapered edges. The gypsum wallboard type, thickness, number of layers, fastener type and sheet orientation shall be as specified in the individual U300 or U400 Series Design in the UL Fire Resistance Directory. Max size of opening 2-5/8 in. by 18 in. The hourly F Rating of the firestop system is equal to the hourly fire rating of the wall assembly in which it is installed.
2. Electric Metallic Tubing (EMT) – One or more nom 1 in. diam steel electric tubing. The annular space shall be min 1/2 in. to a max 1 in. Conduit to be rigidly supported on both sides of wall assembly.
3. Fill, Void or Cavity Material* – Sealant – For 2 hr F Rating, min 1-1/4 in. thickness of fill material applied within the annulus, flush with both surfaces of wall. For 1 hr F Rating, min 5/8 in. thickness of fill material applied within the annulus, flush with both surfaces of wall.
   HILTI CONSTRUCTION CHEMICALS, DIV OF
   HILTI, Inc. – FS-ONE Sealant

*Bearing the UL Classification Marking

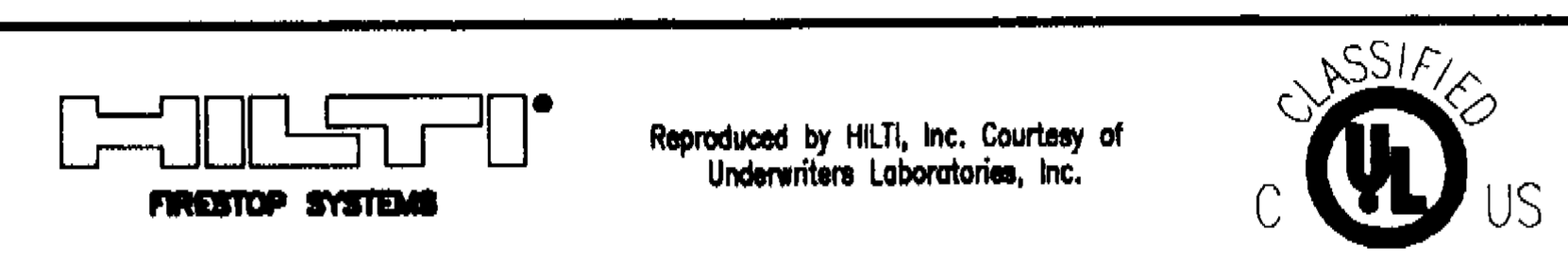

System No. C-AJ-1388
F Rating - 2 Hr
T Rating - 0 Hr

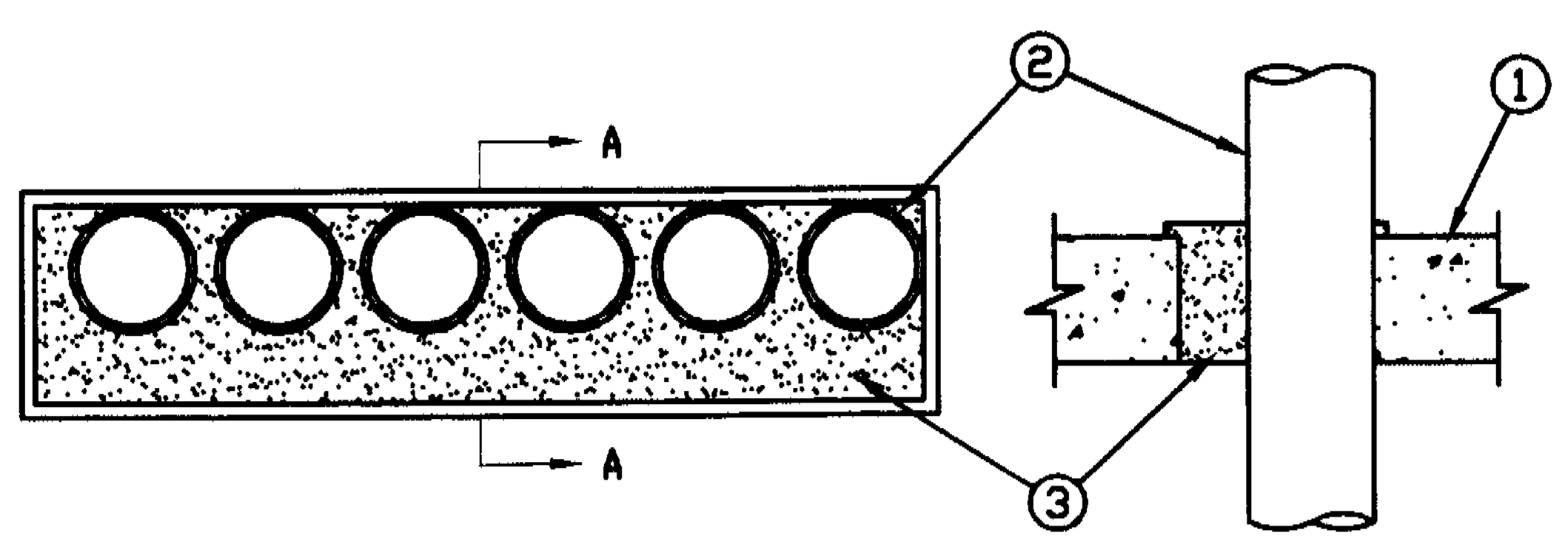

1. Floor or Wall Assembly Min 4-1/2 in. thick reinforced lightweight or normal weight (100-150 pcf) concrete. Wall may also be constructed of any UL Classified Concrete Blocks*. Max area of opening 224 sq in. with max dimension of 32 in. See Concrete Blocks (CAZT) in the Fire Resistance Directory for names of manufacturers.
2. Conduit One or more nom 4 in diam (or smaller) steel electrical metallic tubing or steel conduit to be installed either concentrically or eccentrically within the firestop system. The space between conduits or tubes shall be min 0 in. (point contact) to max 1/2 in. The annular space between the conduit or tube and periphery of opening shall be min 0 in. (point contact) to max 2-3/4 in. Conduit or tube to be rigidly supported on both sides of floor or wall assembly.
   Conduit – Nom 4 in. diam (or smaller) steel electrical metallic conduit or steel conduit.
3. Fill, Void or Cavity Material*– Foam Min 5 in. thickness of fill material applied within the annulus, extending 1/2 in. above the top surface of the floor or both surfaces of wall and overlapping the concrete 1/2 in. on all sides of the opening.
   HILTI CONSTRUCTION CHEMICALS, DIV OF
   HILTI INC -- CP 620 Fire Foam

*Bearing the UL Classification Mark

PENETRATION DETAILS
FIRE AND/OR SMOKE RATED WALL OR FLOOR

SCALE: N.T.S.

SYMBOL LEGEND:

- DUPLEX RECEPTACLE OUTLET 15A, 125V, 3 WIRE MOUNTED @ 18" AFF U.ON. SMALL APPLIANCE AND BATHROOM DUPLEX RECEPTACLES TO BE RATED FOR 20A, 125V, 3 WIRE, GROUND TYPE WALL MOUNTED.
- SINGLE RECEPTACLE OUTLET, 20A, 125V, 3 WIRE, GROUNDING TYPE WALL MOUNTED.
- DRYER OUTLET, 30A, 120/240V, 1ø, GROUNDING TYPE.
- RANGE RECEPTACLE 50A, 120/240V, 1ø, GROUNDING TYPE.
- ELECTRIC MOTOR
- S SINGLE POLE LIGHT SWITCH, 120/277V, 20A
- S_{3W} 3-WAY LIGHT SWITCH, 120/277V, 20A
- DISCONNECT SWITCH SIZED PER EQUIPMENT NAMEPLATE
- 2 (SD) SINGLE STATION SMOKE DETECTOR (120V). TANDEM WIRED WITH SOUNDING BASE & BATTERY BACK-UP.
- (J) JUNCTION BOX
- TELEPHONE OUTLET MOUNTED AT 18" AFF
- TV TV OUTLET MOUNTED AT 18" AFF
- CEILING MOUNTED LIGHT FIXTURE
- WALL MOUNTED LIGHT FIXTURE

V.P: VAPOR PROOF
GFI: GROUND FAULT CIRCUIT INTERRUPTER
AFCI: ARC FAULT CIRCUIT INTERRUPTER
WP: WEATHER PROOF

ELEVATOR ELECTRICAL NOTES

1. PROVIDE ELEVATOR DISCONNECT INSIDE ELEVATOR MACHINE ROOM WITH TIME DELAY FUSES (RK5) WITH REJECTION CLIPS. FUSES ARE TO BE SIZED AS REQUIRED BY ELEVATOR COMPANY SHOP DRAWINGS. (NEC 620-5).
2. PROVIDE A DEDICATED 120V, 20A, BRANCH CIRCUIT PER NEC 620-22 FOR ELEVATOR CAR LIGHTS WITH A DISCONNECTING MEANS. (MUST BE LOCKABLE IN THE OPEN POSITION AND WIRED TO ELEVATOR CONTROLLER).
3. LIGHT FIXTURE INSIDE ELEVATOR MACHINE ROOM SHALL BE LENSED TYPE; OR IF INDUSTRIAL TYPE, SHALL BE PROVIDE WITH WIRE GARDS AND TUBE GARD.
4. PROVIDE A 20A, 125V, GFI RECEPTACLE IN ELEVATOR MACHINE ROOM AND PIT.
5. PROVIDE A DEDICATED TELEPHONE LINE TO ELEVATOR CONTROLLER. (ONE DEDICATE LINE PER ELEVATOR).
6. ELEVATOR CAB(S) SHALL BE PROVIDED WITH A TELEPHONE OR A MEANS OF TWO-WAY COMMUNICATION.
7. PROVIDE TWO VAPOR TIGHT LIGHT FIXTURES CONTROLLED BY A SWITCH INSIDE EACH ELEVATOR PIT.
8. WHEN A HYDRAULIC ELEVATOR HAS PROVISIONS FOR LOWERING BY BATTERY, THE MACHINE ROOM DISCONNECT, WHILE IN THE "OFF" POSITION (OPEN), MUST PREVENT THE ELEVATOR FROM LOWERING UNDER BATTERY POWER TO SHUT DOWN THE BATTERY LOWERING FEATURE WITH THE ELEVATOR DISCONNECT SWITCH, THE CONTRACTOR SHALL PROVIDE AN AUXILIARY SET OF CONTACTS IN THAT SWITCH AND A PAIR OF #16 WIRES TO THE ELEVATOR CONTROLLER TO DISABLE THE BATTERY LOWERING FUNCTION. THE BATTERY LOWERING FUNCTION SHALL ALSO BE DISABLED UNDER SHUNT TRIP OPERATION, SEE BELOW.
9. WHEN A BUILDING IS PROTECTED BY A WET PIPE SPRINKLER SYSTEM AND SPRINKLER HEADS ARE INSTALLED IN THE ELEVATOR SHAFT, THE ELEVATOR PIT, AND THE ELEVATOR MACHINE ROOM. PROVIDE FIXED TEMPERATURE HEAT DETECTOR NEXT TO EACH SPRINKLER HEAD ON THE TOP OF THE SHAFT, SIDE OF THE ELEVATOR PIT, AND ELEVATOR MACHINE ROOM. HEAT DETECTOR TEMPERATURE SHALL BE LOWER THAN SPRINKLER HEAD TEMPERATURE, VERIFY WITH FIRE PROTECTION CONTRACTOR PRIOR TO ORDERING. THESE HEAT DETECTORS ARE NOT CONNECTED TO THE BUILDING'S FIRE ALARM SYSTEM, BUT ARE USED EXCLUSIVELY FOR TRIPPING OF THE ELEVATOR SERVICE DISCONNECT AT THE MAIN ELECTRICAL ROOM. PROVIDE SHUNT TRIP BREAKER AT EACH ELEVATOR SERVICE DISCONNECT.

   IF ELEVATOR IS EQUIPPED WITH A BATTERY LOWERING FEATURE, AN ADDITIONAL SET OF AUXILIARY CONTACTS MUST BE PROVIDED AT THE HEAT DETECTOR AND 2#16 WIRES SHALL BE PROVIDED TO THE ELEVATOR CONTROLLER TO DISABLE THE BATTERY LOWERING FEATURE. IN LIEU OF ADDITIONAL CONTACTS AT THE HEAT DETECTORS, THE CONTRACTOR SHALL PROVIDE ADDITIONAL WIRING FROM THE SHUNT TRIP BREAKER TO THE ELEVATOR CONTROLLER TO DISABLE THE BATTERY LOWERING FEATURE. THIS WIRING WILL BE INSTALLED IN SERIES WITH THE AUXILIARY DISCONNET SWITCH CONTACTS. THE DRY CONTACTS CONTAINED IN THE AUXILIARY SWITCHES ARE CLOSED WHEN EITHER THE SHUNT TRIP OR DISCONNECT IS IN THE "ON" POSITION AND WILL BE OPEN WHEN THE DISCONNECT IS OPENED OR SHUNT TRIP/HEAT DETECTOR ACTIVATED.

FIRE ALARM SYMBOL LEGEND

- FACP FIRE ALARM CONTROL PANEL (4 ZONES) FIRELITE #MS5024-UD PROVIDED WITH (2) LINE DIALER, POWER SUPPLIES, BATTERIES, ETC., AS REQUIRED.
- (H) HEAT DETECTOR SYSTEM SENSOR #5301
- (D) PHOTOELECTRIC SMOKE DETECTOR. SYSTEM SENSOR #2W-B
- HW ELEVATOR WARNING LIGHT ("DO NOT USE").

F/A ZONES:
1. HEAT/SMOKE DETECTORS.
2. FLOW SWITCHES.
3. TAMPER SWITCHES.
4. SPARE.

RESIDENTIAL NOTES:

1. PROVIDE ALL FINAL CONNECTIONS TO ALL EQUIPMENT AND APPLIANCES.
2. PROVIDE ALL A/C CONTROL IN SEPARATE 1/2"C AS REQUIRED BY A/C DRAWINGS OR MANUFACTURER DIAGRAMS.
3. ALL LAVATORIES AND KITCHEN RECEPTACLES SHALL BE GFI TYPE.
4. TERRACE RECEPTACLES TO BE GFI AND WEATHER PROOF.
5. COORDINATE LOCATION OF ALL DISCONNECT SWITCHES WITH OTHER TRADES TO ALLOW N.E.C. REQUIREMENT CLEARANCE.
6. CIRCUITS WIRING REQUIRED TO BE AS FOLLOWS: 120V-2 WIRE (L-N); 120/240V - 3 WIRE (LL-N); 240V - 2 WIRE (LL). WHEN EQUIPMENT GROUND IS REQUIRED INCREASE CONDUIT SIZE AS REQUIRED.
7. ALL WIRING TO BE COPPER. THHN/THWN TYPE RUN IN CONDUIT.
8. ALL COUNTER RECEPTACLES AND SWITCHES TO BE MOUNTED + 48" MAXIMUM FINISHED FLOOR (TO BOTTOM OF PLATE). UNLESS OTHERWISE NOTED COORDINATE HEIGHT WITH ARCHITECT.
9. REFRIGERATOR RECEPTACLE TO BE MOUNTED + 48" A.F.F.
10. ALL LAVATORY RECEPTACLES TO BE MOUNTED + 48" A.F.F. MAXIMUM, COORDINATE HEIGHT WITH ARCHITECT.
11. COORDINATE LOCATION OF AIR CONDITIONER (INDOOR UNIT) DISCONNECT SWITCH WITH A/C CONTRACTOR TO KEEP N.E.C. REQUIRED CLEARANCE.
12. ALL DUPLEX RECEPTACLES IN EXTERIOR AREAS TO BE OF GFI TYPE AND WEATHER PROOF.
13. MINIMUM WIRE SIZE SHALL BE #12 THHN/THWN WITH THE EXCEPTION OF 15A GENERAL LTG. AND RECEPTACLE BRANCH CIRCUITS WHICH ARE #14 THHN/THWN.
14. CONDUCTORS #6 AWG AND LARGER SHALL BE THW.
15. ALL CONDUCTORS SHALL BE COPPER.
16. CONDUIT IN FINISHED AREAS SHALL BE CONCEALED.
17. CONDUIT IN UNFINISHED AREAS SHALL BE EXPOSED.
18. FUSES SHALL BE DUAL ELEMENT, TIME DELAY TYPE.
19. INSTALL NYLON PULL STRING IN ALL EMPTY CONDUITS FOR FUTURE USE.
20. ALL MATERIALS SHALL BE U.L. APPROVED.
21. WORKMANSHIP SHALL BE TO BEST COMMERCIAL PRACTICE.
22. INSTALLATION SHALL BE IN ACCORDANCE WITH LOCAL, STATE AND NATIONAL CODES.
23. RECESSED LIGHT FIXTURES OVER BATHTUB OR SHOWER SHALL BE COMPLETELY ENCLOSED AND VAPOR PROOF SUITABLE FOR WET LOCATIONS.
24. ALL LUMINARIES SHALL BE PROPERLY SUPPORTED IN ACCORDANCE WITH THE CEILING SYSTEM MANUFACTURER RECOMMENDATIONS AND LOCAL CODE REQUIREMENTS.
25. RISER AND DIAGRAMMATIC ONLY. THEY DO NOT SHOW EVERY BEND REQUIRED FOR THE INSTALLATION.
26. THIS DRAWING IS A GUIDE FOR THE INSTALLATION OF ELECTRICAL SERVICE. THE ELECTRICAL CONTRACTOR IS RESPONSIBLE TO PROVIDE A FUNCTIONING SYSTEM.
27. A/C EQUIPMENT WIRING, BREAKER AND FUSE SIZES ARE BASED ON A/C EQUIPMENT SPECIFIED ON CONTRACT DRAWINGS. CONTRACTOR IS RESPONSIBLE FOR PROVIDING ALL WIRING, BREAKER AND FUSES SIZES IN ACCORDANCE WITH A/C EQUIPMENT NAMEPLATE REQUIREMENTS IF DIFFERENT FROM THAT SPECIFIED ON DRAWINGS, AS WELL AS ANY FEEDER CHANGES BEING AFFECTED BY THIS CHANGE. CONTRACTOR SHALL MAKE ABOVE MENTIONED CHANGES AT NO EXTRA COST.
28. CONTRACTOR SHALL COORDINATE ALL HIS WORK WITH OTHER TRADES IN ORDER TO FURNISH AND INSTALL ALL CONTROL WIRING AND RACEWAYS ALL POWER CONTROL CIRCUITS WIRING AND RACEWAYS AS SHOWN ON THE AIR CONDITIONING DRAWINGS OR SPECIFICATIONS. IF AIR CONDITIONING DRAWINGS REFER TO MANUFACTURER'S WIRING DIAGRAMS, THE CONTRACTOR SHALL VERIFY WITH SAID MANUFACTURER ALL REQUIREMENTS AND INCLUDE ALL RELATED WORK IN HIS CONTRACT.
29. ALL EQUIPMENT AND DEVICES TO BE MOUNTED ABOVE FLOOD CRITERIA.

FIRE ALARM NOTES FOR ELEVATOR RECALL AND TAMPER FLOW SWITCH MONITORING ONLY

1. FIRE ALARM SYSTEM SHALL BE U.L. LISTED NFPA 72 APPROVED.
2. ALL WIRING AND CONDUIT SIZE SHALL BE IN ACCORDANCE WITH MANUFACTURER'S RECOMMENDATION, AND REQUIREMENTS OF NEC, LOCAL CODES AND NFPA IN NO CASE. SHALL THE WIRING BE SMALLER THAN #16 F.P.L. CU IN. 3/4" CONDUIT
3. ALL CONDUCTORS SHALL BE COOPER AND SHALL BE SIZED FOR A MAXIMUM LOSS OF 1 dB. MINIMUM WIRE SIZE SHALL BE AS REQUIRED BY MANUFACTURER IN NO CASE. SHALL THE WIRING BE SMALLER THAN #16 F.P.L. CU IN. 3/4" CONDUIT
4. QUANTITY OF WIRES PER DEVICES SHALL BE AS REQUIRED BY MANUFACTURER.
5. SYSTEM TO BE POWER LIMITED.
6. CONTRACTOR IS RESPONSIBLE FOR CONNECTING AND MONITORING ALL TAMPER AND FLOW SWITCHES TO FIRE ALARM PANEL EVEN IF THEY ARE NOT SHOWN ON FLOOR PLAN. COORDINATE WITH FIRE SPRINKLER DRAWINGS.
7. ACTIVATION OF A SMOKE OR HEAT DETECTOR IN ANY ELEVATOR LOBBY OR ASSOCIATED ELEVATOR MACHINE ROOM, OTHER THAN AT THE DESIGNATED LEVEL, SHALL CAUSE ALL CARS THAT SERVE THAT LOBBY TO RETURN NON-STOP TO THE DESIGNATED LEVEL. THE OPERATION SHALL CONFORM TO THE REQUIREMENTS OF RULE 211.3a OF ASME/ANSI A17.1-1987 AS ADOPTED BY CHAPTER 4A-47 OF THE DEPARTMENT OF INSURANCE, STATE FIRE MARSHALL.

   NO DEVICE, OTHER THAN PHASE I SWITCH (RULE 221.3a) OR THE DETECTOR IN THE ELEVATOR LOBBY OR ASSOCIATED MACHINE ROOM SHALL INITIATE PHASE I OPERATION.

   IF THE SMOKE OR HEAT DETECTOR AT THE DESIGNATED LEVEL IS ACTIVATED, THE CARS SHALL RETURN TO AN ALTERNATE LEVEL APPROVED BY ENFORCING AUTHORITY, UNLESS THE PHASE I SWITCH (RULE 221.3a) IS IN THE "ON" POSITION.
8. CONTRACTOR IS RESPONSIBLE OF PROVIDING SIGNED AND SEALED FIRE ALARM PERMIT DRAWINGS.

DRAWN BY:

REVISIONS:
1 OWNER REV. 11-08-06
2 BLDG. DEPT. COMMENTS 01-09-07

3D DESIGN, INC.
ANTHONY LEON
AR0016752
ARCHITECTURE
4300 BISCAYNE BLVD. SUITE#G04 MIAMI, FL 33137 T.305.438.9377 F.305.438.9378

SEAL

NEW BLGD
FOR
1529 JEFFERSON AVE
MIAMI BEACH, FL
33139

OFFICE COPY
CITY OF MIAMI BEACH
... PERMIT BY
JUN 1 2 2007
Hede 5/25/7
ENGINEERING:
PUBLIC WORKS:
STRUCTURAL:
ACCESSIBILITY:

Innovative Engineering Group Inc. CA#6717
5532 N.W. 72nd Ave
Miami, FL 33166
305-888-9626
Sudhir K. Gupta, P.E.
Fla. Reg. No. 29189

2/12/07

E-4
JUNE 9, 2006

System No. W-L-1095
F Ratings - 1 & 2 Hr (See Item 1)
T Ratings - 1 & 2 Hr (See Item 3)
L Rating At Ambient - Less Than 1 CFM/Sq Ft
L Rating At 400 F - 4 CFM/Sq Ft

HILTI FIRESTOP SYSTEMS — CLASSIFIED C UL US

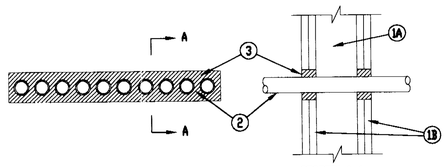

FONT VIEW — SECTION A-A

1. Wall Assembly – The 1 or 2 hr fire-rated gypsum wallboard/stud wall assembly shall be constructed of the materials and in the manner described in the individual U300 or U400 Series Wall and Partition Designs in the UL Fire Resistance Directory and shall include the following construction features:
   A. Studs – Wall framing may consist of either wood studs or steel channel studs. Wood studs to consist of nom 2 by 4 in. lumber spaced 16 in. OC. Steel studs to be min 2-1/2 in. wide and spaced max 24 in. OC.
   B. Wallboard, Gypsum* – 5/8 in. thick, 4 ft wide with square or tapered edges. The gypsum wallboard type, thickness, number of layers, fastener type and sheet orientation shall be as specified in the individual U300 or U400 Series Design in the UL Fire Resistance Directory. Max size of opening 2-5/8 in. by 18 in. The hourly F Rating of the firestop system is equal to the hourly fire rating of the wall assembly in which it is installed.
2. Electric Metallic Tubing (EMT) – One or more nom 1 in. diam steel electric tubing. The annular space shall be min 1/2 in. to a max 1 in. Conduit to be rigidly supported on both sides of wall assembly.
3. Fill, Void or Cavity Material* – Sealant – For 2 hr F Rating, min 1-1/4 in. thickness of fill material applied within the annulus, flush with both surfaces of wall. For 1 hr F Rating, min 5/8 in. thickness of fill material applied within the annulus, flush with both surfaces of wall.
   HILTI CONSTRUCTION CHEMICALS, DIV OF
   HILTI, Inc. – FS-ONE Sealant

*Bearing the UL Classification Marking

HILTI FIRESTOP SYSTEMS — Reproduced by HILTI, Inc. Courtesy of Underwriters Laboratories, Inc. — CLASSIFIED C UL US

System No. C-AJ-1388
F Rating - 2 Hr
T Rating - 0 Hr

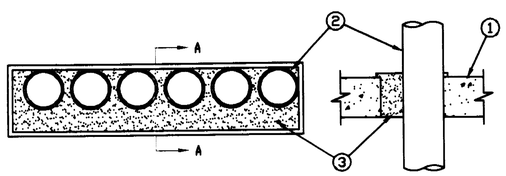

SECTION A-A

1. Floor or Wall Assembly Min 4-1/2 in. thick reinforced lightweight or normal weight (100-150 pcf) concrete. Wall may also be constructed of any UL Classified Concrete Blocks*. Max area of opening 224 sq in. with max dimension of 32 in. See Concrete Blocks (CAZT) in the Fire Resistance Directory for names of manufacturers.
2. Conduit One or more nom 4 in diam (or smaller) steel electrical metallic tubing or steel conduit to be installed either concentrically or eccentrically within the firestop system. The space between conduits or tubes shall be min 0 in. (point contact) to max 1/2 in. The annular space between the conduit or tube and periphery of opening shall be min 0 in. (point contact) to max 2-3/4 in. Conduit or tube to be rigidly supported on both sides of floor or wall assembly.
   Conduit – Nom 4 in. diam (or smaller) steel electrical metallic conduit or steel conduit.
3. Fill, Void or Cavity Material*– Foam Min 5 in. thickness of fill material applied within the annulus, extending 1/2 in. above the top surface of the floor or both surfaces of wall and overlapping the concrete 1/2 in. on all sides of the opening.
   HILTI CONSTRUCTION CHEMICALS, DIV OF
   HILTI INC -- CP 620 Fire Foam

*Bearing the UL Classification Mark

PENETRATION DETAILS
FIRE AND/OR SMOKE RATED WALL OR FLOOR

SCALE: N.T.S.

SYMBOL LEGEND:

- DUPLEX RECEPTACLE OUTLET 15A, 125V, 3 WIRE MOUNTED @ 18" AFF U.O.N. SMALL APPLIANCE AND BATHROOM DUPLEX RECEPTACLES TO BE RATED FOR 20A, 125V, 3 WIRE, GROUND TYPE WALL MOUNTED.
- SINGLE RECEPTACLE OUTLET, 20A, 125V, 3 WIRE, GROUNDING TYPE WALL MOUNTED.
- DRYER OUTLET, 30A, 120/240V, 1ø, GROUNDING TYPE.
- RANGE RECEPTACLE 50A, 120/240V, 1ø, GROUNDING TYPE.
- ELECTRIC MOTOR
- S SINGLE POLE LIGHT SWITCH, 120/277V, 20A
- S_{3W} 3-WAY LIGHT SWITCH, 120/277V, 20A
- DISCONNECT SWITCH SIZED PER EQUIPMENT NAMEPLATE
- SD PHOTOELECTRIC SMOKE DETECTOR (120V). TANDEM WIRED WITH SOUNDING BASE & BATTERY BACK-UP.
- J JUNCTION BOX
- TELEPHONE OUTLET MOUNTED AT 18" AFF
- TV TV OUTLET MOUNTED AT 18" AFF
- CEILING MOUNTED LIGHT FIXTURE
- WALL MOUNTED LIGHT FIXTURE

V.P: VAPOR PROOF
GFI: GROUND FAULT CIRCUIT INTERRUPTER
AFCI: ARC FAULT CIRCUIT INTERRUPTER
WP: WEATHER PROOF

ELEVATOR ELECTRICAL NOTES

1. PROVIDE ELEVATOR DISCONNECT INSIDE ELEVATOR MACHINE ROOM WITH TIME DELAY FUSES (RKS) WITH REJECTION CLIPS. FUSES ARE TO BE SIZED AS REQUIRED BY ELEVATOR COMPANY SHOP DRAWINGS. (NEC 620-5).
2. PROVIDE A DEDICATED 120V, 20A, BRANCH CIRCUIT PER NEC 620-22 FOR ELEVATOR CAR LIGHTS WITH A DISCONNECTING MEANS. (MUST BE LOCKABLE IN THE OPEN POSITION AND WIRED TO ELEVATOR CONTROLLER).
3. LIGHT FIXTURE INSIDE ELEVATOR MACHINE ROOM SHALL BE LENSED TYPE; OR IF INDUSTRIAL TYPE, SHALL BE PROVIDE WITH WIRE GARDS AND TUBE GARD.
4. PROVIDE A 20A, 125V, GFI RECEPTACLE IN ELEVATOR MACHINE ROOM AND PIT.
5. PROVIDE A DEDICATED TELEPHONE LINE TO ELEVATOR CONTROLLER. (ONE DEDICATE LINE PER ELEVATOR).
6. ELEVATOR CAB(S) SHALL BE PROVIDED WITH A TELEPHONE OR A MEANS OF TWO-WAY COMMUNICATION.
7. PROVIDE TWO VAPOR TIGHT LIGHT FIXTURES CONTROLLED BY A SWITCH INSIDE EACH ELEVATOR PIT.
8. WHEN A HYDRAULIC ELEVATOR HAS PROVISIONS FOR LOWERING BY BATTERY, THE MACHINE ROOM DISCONNECT, WHILE IN THE "OFF" POSITION (OPEN), MUST PREVENT THE ELEVATOR FROM LOWERING UNDER BATTERY POWER TO SHUT DOWN THE BATTERY LOWERING FEATURE WITH THE ELEVATOR DISCONNECT SWITCH, THE CONTRACTOR SHALL PROVIDE AN AUXILIARY SET OF CONTACTS IN THAT SWITCH AND A PAIR OF #16 WIRES TO THE ELEVATOR CONTROLLER TO DISABLE THE BATTERY LOWERING FUNCTION. THE BATTERY LOWERING FUNCTION SHALL ALSO BE DISABLED UNDER SHUNT TRIP OPERATION, SEE BELOW.
9. WHEN A BUILDING IS PROTECTED BY A WET PIPE SPRINKLER SYSTEM AND SPRINKLER HEADS ARE INSTALLED IN THE ELEVATOR SHAFT, THE ELEVATOR PIT, AND THE ELEVATOR MACHINE ROOM. PROVIDE FIXED TEMPERATURE HEAT DETECTOR NEXT TO EACH SPRINKLER HEAD ON THE TOP OF THE SHAFT, SIDE OF THE ELEVATOR PIT, AND ELEVATOR MACHINE ROOM. HEAT DETECTOR TEMPERATURE SHALL BE LOWER THAN SPRINKLER HEAD TEMPERATURE, VERIFY WITH FIRE PROTECTION CONTRACTOR PRIOR TO ORDERING. THESE HEAT DETECTORS ARE NOT CONNECTED TO THE BUILDING'S FIRE ALARM SYSTEM, BUT ARE USED EXCLUSIVELY FOR TRIPPING OF THE ELEVATOR SERVICE DISCONNECT AT THE MAIN ELECTRICAL ROOM. PROVIDE SHUNT TRIP BREAKER AT EACH ELEVATOR SERVICE DISCONNECT.

   IF ELEVATOR IS EQUIPPED WITH A BATTERY LOWERING FEATURE, AN ADDITIONAL SET OF AUXILIARY CONTACTS MUST BE PROVIDED AT THE HEAT DETECTOR AND 2#16 WIRES SHALL BE PROVIDED TO THE ELEVATOR CONTROLLER TO DISABLE THE BATTERY LOWERING FEATURE. IN LIEU OF ADDITIONAL CONTACTS AT THE HEAT DETECTORS, THE CONTRACTOR SHALL PROVIDE ADDITIONAL WIRING FROM THE SHUNT TRIP BREAKER TO THE ELEVATOR CONTROLLER TO DISABLE THE BATTERY LOWERING FEATURE. THIS WIRING WILL BE INSTALLED IN SERIES WITH THE AUXILIARY DISCONNET SWITCH CONTACTS. THE DRY CONTACTS CONTAINED IN THE AUXILIARY SWITCHES ARE CLOSED WHEN EITHER THE SHUNT TRIP OR DISCONNECT IS IN THE "ON" POSITION AND WILL BE OPEN WHEN THE DISCONNECT IS OPENED OR SHUNT TRIP/HEAT DETECTOR ACTIVATED.

FIRE ALARM SYMBOL LEGEND

- FACP — FIRE ALARM CONTROL PANEL (4 ZONES) FIRELITE #MS5024-UD PROVIDED WITH (2) LINE DIALER, POWER SUPPLIES, BATTERIES, ETC., AS REQUIRED.
- (H) HEAT DETECTOR SYSTEM SENSOR #5301
- (D) PHOTOELECTRIC SMOKE DETECTOR. SYSTEM SENSOR #2W-B
- HW ELEVATOR WARNING LIGHT ("DO NOT USE").

F/A ZONES:
1. HEAT/SMOKE DETECTORS.
2. FLOW SWITCHES.
3. TAMPER SWITCHES.
4. SPARE.

RESIDENTIAL NOTES:

1. PROVIDE ALL FINAL CONNECTIONS TO ALL EQUIPMENT AND APPLIANCES.
2. PROVIDE ALL A/C CONTROL IN SEPARATE 1/2"C AS REQUIRED BY A/C DRAWINGS OR MANUFACTURER DIAGRAMS.
3. ALL LAVATORIES AND KITCHEN RECEPTACLES SHALL BE GFI TYPE.
4. TERRACE RECEPTACLES TO BE GFI AND WEATHER PROOF.
5. COORDINATE LOCATION OF ALL DISCONNECT SWITCHES WITH OTHER TRADES TO ALLOW N.E.C. REQUIREMENT CLEARANCE.
6. CIRCUITS WIRING REQUIRED TO BE AS FOLLOWS: 120V-2 WIRE (L-N); 120/240V - 3 WIRE (LL-N); 240V - 2 WIRE (LL). WHEN EQUIPMENT GROUND IS REQUIRED INCREASE CONDUIT SIZE AS REQUIRED.
7. ALL WIRING TO BE COPPER. THHN/THWN TYPE RUN IN CONDUIT.
8. ALL COUNTER RECEPTACLES AND SWITCHES TO BE MOUNTED + 48" MAXIMUM FINISHED FLOOR (TO BOTTOM OF PLATE). UNLESS OTHERWISE NOTED COORDINATE HEIGHT WITH ARCHITECT.
9. REFRIGERATOR RECEPTACLE TO BE MOUNTED + 48" A.F.F.
10. ALL LAVATORY RECEPTACLES TO BE MOUNTED + 48" A.F.F. MAXIMUM, COORDINATE HEIGHT WITH ARCHITECT.
11. COORDINATE LOCATION OF AIR CONDITIONER (INDOOR UNIT) DISCONNECT SWITCH WITH A/C CONTRACTOR TO KEEP N.E.C. REQUIRED CLEARANCE.
12. ALL DUPLEX RECEPTACLES IN EXTERIOR AREAS TO BE OF GFI TYPE AND WEATHER PROOF.
13. MINIMUM WIRE SIZE SHALL BE #12 THHN/THWN WITH THE EXCEPTION OF 15A GENERAL LTG. AND RECEPTACLE BRANCH CIRCUITS WHICH ARE #14 THHN/THWN.
14. CONDUCTORS #6 AWG AND LARGER SHALL BE THW.
15. ALL CONDUCTORS SHALL BE COPPER.
16. CONDUIT IN FINISHED AREAS SHALL BE CONCEALED.
17. CONDUIT IN UNFINISHED AREAS SHALL BE EXPOSED.
18. FUSES SHALL BE DUAL ELEMENT, TIME DELAY TYPE.
19. INSTALL NYLON PULL STRING IN ALL EMPTY CONDUITS FOR FUTURE USE.
20. ALL MATERIALS SHALL BE U.L. APPROVED.
21. WORKMANSHIP SHALL BE TO BEST COMMERCIAL PRACTICE.
22. INSTALLATION SHALL BE IN ACCORDANCE WITH LOCAL, STATE AND NATIONAL CODES.
23. RECESSED LIGHT FIXTURES OVER BATHTUB OR SHOWER SHALL BE COMPLETELY ENCLOSED AND VAPOR PROOF SUITABLE FOR WET LOCATIONS.
24. ALL LUMINARIES SHALL BE PROPERLY SUPPORTED IN ACCORDANCE WITH THE CEILING SYSTEM MANUFACTURER RECOMMENDATIONS AND LOCAL CODE REQUIREMENTS.
25. RISER AND DIAGRAMMATIC ONLY. THEY DO NOT SHOW EVERY BEND REQUIRED FOR THE INSTALLATION.
26. THIS DRAWING IS A GUIDE FOR THE INSTALLATION OF ELECTRICAL SERVICE. THE ELECTRICAL CONTRACTOR IS RESPONSIBLE TO PROVIDE A FUNCTIONING SYSTEM.
27. A/C EQUIPMENT WIRING, BREAKER AND FUSE SIZES ARE BASED ON A/C EQUIPMENT SPECIFIED ON CONTRACT DRAWINGS. CONTRACTOR IS RESPONSIBLE FOR PROVIDING ALL WIRING, BREAKER AND FUSES SIZES IN ACCORDANCE WITH A/C EQUIPMENT NAMEPLATE REQUIREMENTS IF DIFFERENT FROM THAT SPECIFIED ON DRAWINGS, AS WELL AS ANY FEEDER CHANGES BEING AFFECTED BY THIS CHANGE. CONTRACTOR SHALL MAKE ABOVE MENTIONED CHANGES AT NO EXTRA COST.
28. CONTRACTOR SHALL COORDINATE ALL HIS WORK WITH OTHER TRADES IN ORDER TO FURNISH AND INSTALL ALL CONTROL WIRING AND RACEWAYS ALL POWER CONTROL CIRCUITS WIRING AND RACEWAYS AS SHOWN ON THE AIR CONDITIONING DRAWINGS OR SPECIFICATIONS. IF AIR CONDITIONING DRAWINGS REFER TO MANUFACTURER'S WIRING DIAGRAMS, THE CONTRACTOR SHALL VERIFY WITH SAID MANUFACTURER ALL REQUIREMENTS AND INCLUDE ALL RELATED WORK IN HIS CONTRACT.
29. ALL EQUIPMENT AND DEVICES TO BE MOUNTED ABOVE FLOOD CRITERIA.

FIRE ALARM NOTES FOR ELEVATOR RECALL AND TAMPER FLOW SWITCH MONITORING ONLY

1. FIRE ALARM SYSTEM SHALL BE U.L. LISTED NFPA 72 APPROVED.
2. ALL WIRING AND CONDUIT SIZE SHALL BE IN ACCORDANCE WITH MANUFACTURER'S RECOMMENDATION, AND REQUIREMENTS OF NEC, LOCAL CODES AND NFPA IN NO CASE. SHALL THE WIRING BE SMALLER THAN #16 F.P.L. CU IN. 3/4" CONDUIT
3. ALL CONDUCTORS SHALL BE COOPER AND SHALL BE SIZED FOR A MAXIMUM LOSS OF 1 dB. MINIMUM WIRE SIZE SHALL BE AS REQUIRED BY MANUFACTURER IN NO CASE. SHALL THE WIRING BE SMALLER THAN #16 F.P.L. CU IN. 3/4" CONDUIT
4. QUANTITY OF WIRES PER DEVICES SHALL BE AS REQUIRED BY MANUFACTURER.
5. SYSTEM TO BE POWER LIMITED.
6. CONTRACTOR IS RESPONSIBLE FOR CONNECTING AND MONITORING ALL TAMPER AND FLOW SWITCHES TO FIRE ALARM PANEL EVEN IF THEY ARE NOT SHOWN ON FLOOR PLAN. COORDINATE WITH FIRE SPRINKLER DRAWINGS.
7. ACTIVATION OF A SMOKE OR HEAT DETECTOR IN ANY ELEVATOR LOBBY OR ASSOCIATED ELEVATOR MACHINE ROOM, OTHER THAN AT THE DESIGNATED LEVEL, SHALL CAUSE ALL CARS THAT SERVE THAT LOBBY TO RETURN NON-STOP TO THE DESIGNATED LEVEL. THE OPERATION SHALL CONFORM TO THE REQUIREMENTS OF RULE 211.3a OF ASME/ANSI A17.1-1987 AS ADOPTED BY CHAPTER 4A-47 OF THE DEPARTMENT OF INSURANCE, STATE FIRE MARSHALL.

   NO DEVICE, OTHER THAN PHASE I SWITCH (RULE 221.3a) OR THE DETECTOR IN THE ELEVATOR LOBBY OR ASSOCIATED MACHINE ROOM SHALL INITIATE PHASE I OPERATION.

   IF THE SMOKE OR HEAT DETECTOR AT THE DESIGNATED LEVEL IS ACTIVATED, THE CARS SHALL RETURN TO AN ALTERNATE LEVEL APPROVED BY ENFORCING AUTHORITY, UNLESS THE PHASE I SWITCH (RULE 221.3a) IS IN THE "ON" POSITION.
8. CONTRACTOR IS RESPONSIBLE OF PROVIDING SIGNED AND SEALED FIRE ALARM PERMIT DRAWINGS.

DRAWN BY:

REVISIONS:
OWNER REV. 11-2-06

3DESIGN INC
ANTHONY LEON
AR0016752
ARCHITECTURE
4300 BISCAYNE BLVD. SUITE#604 MIAMI, FL 33137 T.305 438 9377 F.305 438 9378

SEAL

NEW BLDG
FOR
1529 JEFFERSON AVE
MIAMI BEACH, FL
33139

CITY OF MIAMI BEACH
VOID

11/14/06

Innovative Engineering Group Inc. CA#6717
5532 N.W. 72nd Ave
Miami, FL 33166
305-888-9628
Sudhir K. Gupta, P.E.
Fla. Reg. No. 29189

E-4
JUNE 9, 2006

System No. W-L-1095
F Ratings - 1 & 2 Hr (See Item 1)
T Ratings - 1 & 2 Hr (See Item 3)
L Rating At Ambient - Less Than 1 CFM/Sq Ft
L Rating At 400 F - 4 CFM/Sq Ft

HILTI FIRESTOP SYSTEMS

CLASSIFIED C UL US

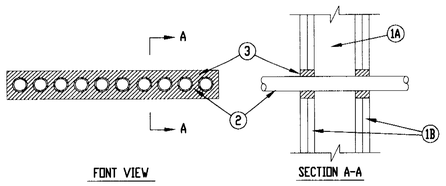

FONT VIEW SECTION A-A

1. Wall Assembly – The 1 or 2 hr fire-rated gypsum wallboard/stud wall assembly shall be constructed of the materials and in the manner described in the individual U300 or U400 Series Wall and Partition Designs in the UL Fire Resistance Directory and shall include the following construction features:
   A. Studs – Wall framing may consist of either wood studs or steel channel studs. Wood studs to consist of nom 2 by 4 in. lumber spaced 16 in. OC. Steel studs to be min 2-1/2 in. wide and spaced max 24 in. OC.
   B. Wallboard, Gypsum* – 5/8 in. thick, 4 ft wide with square or tapered edges. The gypsum wallboard type, thickness, number of layers, fastener type and sheet orientation shall be as specified in the individual U300 or U400 Series Design in the UL Fire Resistance Directory. Max size of opening 2-5/8 in. by 18 in. The hourly F Rating of the firestop system is equal to the hourly fire rating of the wall assembly in which it is installed.
2. Electric Metallic Tubing (EMT) – One or more nom 1 in. diam steel electric tubing. The annular space shall be min 1/2 in. to a max 1 in. Conduit to be rigidly supported on both sides of wall assembly.
3. Fill, Void or Cavity Material* – Sealant – For 2 hr F Rating, min 1-1/4 in. thickness of fill material applied within the annulus, flush with both surfaces of wall. For 1 hr F Rating, min 5/8 in. thickness of fill material applied within the annulus, flush with both surfaces of wall.
   HILTI CONSTRUCTION CHEMICALS, DIV OF
   HILTI, Inc. – FS-ONE Sealant

*Bearing the UL Classification Marking

HILTI FIRESTOP SYSTEMS

Reproduced by HILTI, Inc. Courtesy of Underwriters Laboratories, Inc.

CLASSIFIED C UL US

System No. C-AJ-1388
F Rating - 2 Hr
T Rating - 0 Hr

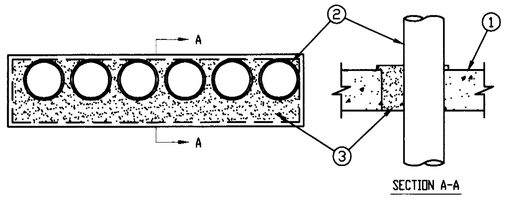

SECTION A-A

1. Floor or Wall Assembly Min 4-1/2 in. thick reinforced lightweight or normal weight (100-150 pcf) concrete. Wall may also be constructed of any UL Classified Concrete Blocks*. Max area of opening 224 sq in. with max dimension of 32 in. See Concrete Blocks (CAZT) in the Fire Resistance Directory for names of manufacturers.
2. Conduit One or more nom 4 in diam (or smaller) steel electrical metallic tubing or steel conduit to be installed either concentrically or eccentrically within the firestop system. The space between conduits or tubes shall be min 0 in. (point contact) to max 1/2 in. The annular space between the conduit or tube and periphery of opening shall be min 0 in. (point contact) to max 2-3/4 in. Conduit or tube to be rigidly supported on both sides of floor or wall assembly.
   Conduit – Nom 4 in. diam (or smaller) steel electrical metallic conduit or steel conduit.
3. Fill, Void or Cavity Material* – Foam Min 5 in. thickness of fill material applied within the annulus, extending 1/2 in. above the top surface of the floor or both surfaces of wall and overlapping the concrete 1/2 in. on all sides of the opening.
   HILTI CONSTRUCTION CHEMICALS, DIV OF
   HILTI INC -- CP 620 Fire Foam

*Bearing the UL Classification Mark

PENETRATION DETAILS
FIRE AND/OR SMOKE RATED WALL OR FLOOR

SCALE: N.T.S.

SYMBOL LEGEND:

- DUPLEX RECEPTACLE OUTLET 15A, 125V, 3 WIRE MOUNTED @ 18" AFF U.O.N. SMALL APPLIANCE AND BATHROOM DUPLEX RECEPTACLES TO BE RATED FOR 20A, 125V, 3 WIRE, GROUND TYPE WALL MOUNTED.
- SINGLE RECEPTACLE OUTLET, 20A, 125V, 3 WIRE, GROUNDING TYPE WALL MOUNTED.
- DRYER OUTLET, 30A, 120/240V, 1ø, GROUNDING TYPE.
- RANGE RECEPTACLE 50A, 120/240V, 1ø, GROUNDING TYPE.
- ELECTRIC MOTOR
- S SINGLE POLE LIGHT SWITCH, 120/277V, 20A
- S_{3W} 3-WAY LIGHT SWITCH, 120/277V, 20A
- DISCONNECT SWITCH SIZED PER EQUIPMENT NAMEPLATE
- (SD) PHOTOELECTRIC SMOKE DETECTOR (120V). TANDEM WIRED WITH SOUNDING BASE & BATTERY BACK-UP.
- (J) JUNCTION BOX
- TELEPHONE OUTLET MOUNTED AT 18" AFF
- TV TV OUTLET MOUNTED AT 18" AFF
- CEILING MOUNTED LIGHT FIXTURE
- WALL MOUNTED LIGHT FIXTURE

V.P: VAPOR PROOF
GFI: GROUND FAULT CIRCUIT INTERRUPTER
AFCI: ARC FAULT CIRCUIT INTERRUPTER
WP: WEATHER PROOF

ELEVATOR ELECTRICAL NOTES

1. PROVIDE ELEVATOR DISCONNECT INSIDE ELEVATOR MACHINE ROOM WITH TIME DELAY FUSES (RK5) WITH REJECTION CLIPS. FUSES ARE TO BE SIZED AS REQUIRED BY ELEVATOR COMPANY SHOP DRAWINGS. (NEC 620-5).
2. PROVIDE A DEDICATED 120V, 20A, BRANCH CIRCUIT PER NEC 620-22 FOR ELEVATOR CAR LIGHTS WITH A DISCONNECTING MEANS. (MUST BE LOCKABLE IN THE OPEN POSITION AND WIRED TO ELEVATOR CONTROLLER).
3. LIGHT FIXTURE INSIDE ELEVATOR MACHINE ROOM SHALL BE LENSED TYPE; OR IF INDUSTRIAL TYPE, SHALL BE PROVIDE WITH WIRE GARDS AND TUBE GARD.
4. PROVIDE A 20A, 125V, GFI RECEPTACLE IN ELEVATOR MACHINE ROOM AND PIT.
5. PROVIDE A DEDICATED TELEPHONE LINE TO ELEVATOR CONTROLLER. (ONE DEDICATE LINE PER ELEVATOR).
6. ELEVATOR CAB(S) SHALL BE PROVIDED WITH A TELEPHONE OR A MEANS OF TWO-WAY COMMUNICATION.
7. PROVIDE TWO VAPOR TIGHT LIGHT FIXTURES CONTROLLED BY A SWITCH INSIDE EACH ELEVATOR PIT.
8. WHEN A HYDRAULIC ELEVATOR HAS PROVISIONS FOR LOWERING BY BATTERY, THE MACHINE ROOM DISCONNECT, WHILE IN THE "OFF" POSITION (OPEN), MUST PREVENT THE ELEVATOR FROM LOWERING UNDER BATTERY POWER TO SHUT DOWN THE BATTERY LOWERING FEATURE WITH THE ELEVATOR DISCONNECT SWITCH, THE CONTRACTOR SHALL PROVIDE AN AUXILIARY SET OF CONTACTS IN THAT SWITCH AND A PAIR OF #16 WIRES TO THE ELEVATOR CONTROLLER TO DISABLE THE BATTERY LOWERING FUNCTION. THE BATTERY LOWERING FUNCTION SHALL ALSO BE DISABLED UNDER SHUNT TRIP OPERATION, SEE BELOW.
9. WHEN A BUILDING IS PROTECTED BY A WET PIPE SPRINKLER SYSTEM AND SPRINKLER HEADS ARE INSTALLED IN THE ELEVATOR SHAFT, THE ELEVATOR PIT, AND THE ELEVATOR MACHINE ROOM. PROVIDE FIXED TEMPERATURE HEAT DETECTOR NEXT TO EACH SPRINKLER HEAD ON THE TOP OF THE SHAFT, SIDE OF THE ELEVATOR PIT, AND ELEVATOR MACHINE ROOM. HEAT DETECTOR TEMPERATURE SHALL BE LOWER THAN SPRINKLER HEAD TEMPERATURE. VERIFY WITH FIRE PROTECTION CONTRACTOR PRIOR TO ORDERING. THESE HEAT DETECTORS ARE NOT CONNECTED TO THE BUILDING'S FIRE ALARM SYSTEM, BUT ARE USED EXCLUSIVELY FOR TRIPPING OF THE ELEVATOR SERVICE DISCONNECT AT THE MAIN ELECTRICAL ROOM. PROVIDE SHUNT TRIP BREAKER AT EACH ELEVATOR SERVICE DISCONNECT.

   IF ELEVATOR IS EQUIPPED WITH A BATTERY LOWERING FEATURE, AN ADDITIONAL SET OF AUXILIARY CONTACTS MUST BE PROVIDED AT THE HEAT DETECTOR AND 2#16 WIRES SHALL BE PROVIDED TO THE ELEVATOR CONTROLLER TO DISABLE THE BATTERY LOWERING FEATURE. IN LIEU OF ADDITIONAL CONTACTS AT THE HEAT DETECTORS, THE CONTRACTOR SHALL PROVIDE ADDITIONAL WIRING FROM THE SHUNT TRIP BREAKER TO THE ELEVATOR CONTROLLER TO DISABLE THE BATTERY LOWERING FEATURE. THIS WIRING WILL BE INSTALLED IN SERIES WITH THE AUXILIARY DISCONNET SWITCH CONTACTS. THE DRY CONTACTS CONTAINED IN THE AUXILIARY SWITCHES ARE CLOSED WHEN EITHER THE SHUNT TRIP OR DISCONNECT IS IN THE "ON" POSITION AND WILL BE OPEN WHEN THE DISCONNECT IS OPENED OR SHUNT TRIP/HEAT DETECTOR ACTIVATED.

FIRE ALARM SYMBOL LEGEND

- FACP FIRE ALARM CONTROL PANEL (4 ZONES) PROVIDED WITH (2) LINE DIALER, POWER SUPPLIES, BATTERIES, ETC., AS REQUIRED.
- (H) HEAT DETECTOR
- (D) PHOTOELECTRIC SMOKE DETECTOR.
- HW ELEVATOR WARNING LIGHT ("DO NOT USE").

F/A ZONES:

1. HEAT/SMOKE DETECTORS.
2. FLOW SWITCHES.
3. TAMPER SWITCHES.
4. SPARE.

RESIDENTIAL NOTES:

1. PROVIDE ALL FINAL CONNECTIONS TO ALL EQUIPMENT AND APPLIANCES.
2. PROVIDE ALL A/C CONTROL IN SEPARATE 1/2°C AS REQUIRED BY A/C DRAWINGS OR MANUFACTURER DIAGRAMS.
3. ALL LAVATORIES AND KITCHEN RECEPTACLES SHALL BE GFI TYPE.
4. TERRACE RECEPTACLES TO BE GFI AND WEATHER PROOF.
5. COORDINATE LOCATION OF ALL DISCONNECT SWITCHES WITH OTHER TRADES TO ALLOW N.E.C. REQUIREMENT CLEARANCE.
6. CIRCUITS WIRING REQUIRED TO BE AS FOLLOWS: 120°-2 WIRE (L-N); 120/240V - 3 WIRE (LL-N); 240V - 2 WIRE (LL). WHEN EQUIPMENT GROUND IS REQUIRED INCREASE CONDUIT SIZE AS REQUIRED.
7. ALL WIRING TO BE COPPER. THHN/THWN TYPE RUN IN CONDUIT.
8. ALL COUNTER RECEPTACLES AND SWITCHES TO BE MOUNTED + 48" MAXIMUM FINISHED FLOOR (TO BOTTOM OF PLATE). UNLESS OTHERWISE NOTED COORDINATE HEIGHT WITH ARCHITECT.
9. REFRIGERATOR RECEPTACLE TO BE MOUNTED + 48" A.F.F.
10. ALL LAVATORY RECEPTACLES TO BE MOUNTED + 48" A.F.F. MAXIMUM, COORDINATE HEIGHT WITH ARCHITECT.
11. COORDINATE LOCATION OF AIR CONDITIONER (INDOOR UNIT) DISCONNECT SWITCH WITH A/C CONTRACTOR TO KEEP N.E.C. REQUIRED CLEARANCE.
12. ALL DUPLEX RECEPTACLES IN EXTERIOR AREAS TO BE OF GFI TYPE AND WEATHER PROOF.
13. MINIMUM WIRE SIZE SHALL BE #12 THHN/THWN WITH THE EXCEPTION OF 15A GENERAL LTG. AND RECEPTACLE BRANCH CIRCUITS WHICH ARE #14 THHN/THWN.
14. CONDUCTORS #6 AWG AND LARGER SHALL BE THW.
15. ALL CONDUCTORS SHALL BE COPPER.
16. CONDUIT IN FINISHED AREAS SHALL BE CONCEALED.
17. CONDUIT IN UNFINISHED AREAS SHALL BE EXPOSED.
18. FUSES SHALL BE DUAL ELEMENT, TIME DELAY TYPE.
19. INSTALL NYLON PULL STRING IN ALL EMPTY CONDUITS FOR FUTURE USE.
20. ALL MATERIALS SHALL BE U.L. APPROVED.
21. WORKMANSHIP SHALL BE TO BEST COMMERCIAL PRACTICE.
22. INSTALLATION SHALL BE IN ACCORDANCE WITH LOCAL, STATE AND NATIONAL CODES.
23. RECESSED LIGHT FIXTURES OVER BATHTUB OR SHOWER SHALL BE COMPLETELY ENCLOSED AND VAPOR PROOF SUITABLE FOR WET LOCATIONS.
24. ALL LUMINARIES SHALL BE PROPERLY SUPPORTED IN ACCORDANCE WITH THE CEILING SYSTEM MANUFACTURER RECOMMENDATIONS AND LOCAL CODE REQUIREMENTS.
25. RISER AND DIAGRAMMATIC ONLY. THEY DO NOT SHOW EVERY BEND REQUIRED FOR THE INSTALLATION.
26. THIS DRAWING IS A GUIDE FOR THE INSTALLATION OF ELECTRICAL SERVICE. THE ELECTRICAL CONTRACTOR IS RESPONSIBLE TO PROVIDE A FUNCTIONING SYSTEM.
27. A/C EQUIPMENT WIRING, BREAKER AND FUSE SIZES ARE BASED ON A/C EQUIPMENT SPECIFIED ON CONTRACT DRAWINGS. CONTRACTOR IS RESPONSIBLE FOR PROVIDING ALL WIRING, BREAKER AND FUSES SIZES IN ACCORDANCE WITH A/C EQUIPMENT NAMEPLATE REQUIREMENTS IF DIFFERENT FROM THAT SPECIFIED ON DRAWINGS, AS WELL AS ANY FEEDER CHANGES BEING AFFECTED BY THIS CHANGE. CONTRACTOR SHALL MAKE ABOVE MENTIONED CHANGES AT NO EXTRA COST.
28. CONTRACTOR SHALL COORDINATE ALL HIS WORK WITH OTHER TRADES IN ORDER TO FURNISH AND INSTALL ALL CONTROL WIRING AND RACEWAYS ALL POWER CONTROL CIRCUITS WIRING AND RACEWAYS AS SHOWN ON THE AIR CONDITIONING DRAWINGS OR SPECIFICATIONS. IF AIR CONDITIONING DRAWINGS REFER TO MANUFACTURER'S WIRING DIAGRAMS, THE CONTRACTOR SHALL VERIFY WITH SAID MANUFACTURER ALL REQUIREMENTS AND INCLUDE ALL RELATED WORK IN HIS CONTRACT.
29. ALL EQUIPMENT AND DEVICES TO BE MOUNTED ABOVE FLOOD CRITERIA.

FIRE ALARM NOTES FOR ELEVATOR RECALL AND TAMPER FLOW SWITCH MONITORING ONLY

1. FIRE ALARM SYSTEM SHALL BE U.L. LISTED NFPA 72 APPROVED.
2. ALL WIRING AND CONDUIT SIZE SHALL BE IN ACCORDANCE WITH MANUFACTURER'S RECOMMENDATION, AND REQUIREMENTS OF NEC, LOCAL CODES AND NFPA IN NO CASE. SHALL THE WIRING BE SMALLER THAN #16 F.P.L. CU IN. 3/4" CONDUIT
3. ALL CONDUCTORS SHALL BE COOPER AND SHALL BE SIZED FOR A MAXIMUM LOSS OF 1 dB. MINIMUM WIRE SIZE SHALL BE AS REQUIRED BY MANUFACTURER IN NO CASE. SHALL THE WIRING BE SMALLER THAN #16 F.P.L. CU IN. 3/4" CONDUIT
4. QUANTITY OF WIRES PER DEVICES SHALL BE AS REQUIRED BY MANUFACTURER.
5. SYSTEM TO BE POWER LIMITED.
6. CONTRACTOR IS RESPONSIBLE FOR CONNECTING AND MONITORING ALL TAMPER AND FLOW SWITCHES TO FIRE ALARM PANEL EVEN IF THEY ARE NOT SHOWN ON FLOOR PLAN. COORDINATE WITH FIRE SPRINKLER DRAWINGS.
7. ACTIVATION OF A SMOKE OR HEAT DETECTOR IN ANY ELEVATOR LOBBY OR ASSOCIATED ELEVATOR MACHINE ROOM, OTHER THAN AT THE DESIGNATED LEVEL, SHALL CAUSE ALL CARS THAT SERVE THAT LOBBY TO RETURN NON-STOP TO THE DESIGNATED LEVEL. THE OPERATION SHALL CONFORM TO THE REQUIREMENTS OF RULE 211.3a OF ASME/ANSI A17.1-1987 AS ADOPTED BY CHAPTER 4A-47 OF THE DEPARTMENT OF INSURANCE, STATE FIRE MARSHALL.

   NO DEVICE, OTHER THAN PHASE I SWITCH (RULE 221.3a) OR THE DETECTOR IN THE ELEVATOR LOBBY OR ASSOCIATED MACHINE ROOM SHALL INITIATE PHASE I OPERATION.

   IF THE SMOKE OR HEAT DETECTOR AT THE DESIGNATED LEVEL IS ACTIVATED, THE CARS SHALL RETURN TO AN ALTERNATE LEVEL APPROVED BY ENFORCING AUTHORITY, UNLESS THE PHASE I SWITCH (RULE 221.3a) IS IN THE "ON" POSITION.
8. CONTRACTOR IS RESPONSIBLE OF PROVIDING SIGNED AND SEALED FIRE ALARM PERMIT DRAWINGS.

DRAWN BY:

REVISIONS:

3DESIGN INC
ANTHONY LEON
AA0003539
ARCHITECTURE
1234 WASHINGTON AVE. SUITE#207 MIAMI BEACH, FL 33139 T:305.531.5208 F:305.531.4515

SEAL

NEW BUILDING FOR
1529 JEFFERSON AVE.
MIAMI BEACH, FL
33139

OFFICE COPY
CITY OF MIAMI BEACH
APPROVED FOR PERMIT
THE FOLLOWING

BUILDING:
ZONING:
DRB/HPB:
CONCURRENCY:
PLUMBING:
ELECTRICAL:
MECHANICAL:
FIRE PREVENTION:
ENGINEERING:
PUBLIC WORKS:
STRUCTURAL:
ACCESS:
FIRE:

CITY OF MIAMI BEACH

6/1/06

Innovative Engineering Group Inc. CA#6717
5532 N.W. 72nd Ave
Miami, FL 33166
305-888-9628
Sudhir K. Gupta, P.E.
Fla. Reg. No. 29189

E-4

JANUARY 24, 2006

PRODUCED BY AN AUTODESK EDUCATIONAL PRODUCT

PLUMBING FIXTURE CONNECTION SCHEDULE

NO.	DESCRIPTION	DRAIN	WATER COLD	WATER HOT	MANUFACTURER MODEL	TRIM
WC	WATER CLOSET TANK	3"	1/2"		SELECTED BY OWNER MAX CONSUMPTION RATE 1.6 GALLONS PER FLUSHING CYCLE	SELECTED BY OWNER
LAV	LAVATORY	1 1/4"	1/2"	1/2"	SELECTED BY OWNER MAX CONSUMPTION RATE 2.2 GALLONS AT 60 PSI	SELECTED BY OWNER
TUB	SHOWER/BATHTUB	2"	3/4"	3/4"	SELECTED BY OWNER MAX CONSUMPTION RATE 2.5 GALLONS AT 80 PSI	SELECTED BY OWNER
KSK	KITCHEN SINK	1 1/2"	1/2"	1/2"	SELECTED BY OWNER MAX CONSUMPTION RATE 2.2 GALLONS AT 60 PSI	SELECTED BY OWNER
WM	WASHER MACHINE	2"	1/2"	1/2"	SELECTED BY OWNER	SELECTED BY OWNER

PROVIDE ANTI-SCALD VALVE FOR TUB
ALL PLUMBING FIXTURES SHALL COMPLY WITH REFERENCED STANDARDS AS PER FBC 2004 PLUMBING SEC.406 THROUG 421

WATER HEATER SCHEDULE

SYMBOL	SERVICE	GAL. CAP.	RECOV. @ 100° RISE	ELECTRICAL REQUIREMENTS	MANUFACTURER/MODEL
EWH-1	RESIDENCE BELOW AHU	40	20.5	240-1-60 4.5 KW	LONGHINVAR LSA040KK(SHORT MODEL)

PLUMBING LEGEND

	SAN	SANITARY DRAIN
	V	SANITARY VENT LINE
	CW	COLD WATER
	HW	HOT WATER
	CD	CONDENSATE DRAIN
	GV	GATE VALVE
	SHA	WATER HAMMER ARRESTOR
	CO	CLEAN-OUT PLUG
C		GAS PIPING
GW		GREASE WASTE PIPING
	HWC	HOT WATER CIRCULATING
	WCO	WALL CLEAN-OUT
VTR		VENT THRU ROOF
HB		HOSE BIBB
VB		VACUUM BREAKER

PLUMBING NOTES

1 ALL PLUMBING SHALL BE DONE IN ACCORDANCE WITH THE FLORIDA BUILDING CODE, STATE AND LOCAL ORDINANCES.

2 PLUMBING CONTRACTOR SHALL VERIFY ALL SPACE CONDITIONES AND DIMENSIONS AT JOB SITE PRIOR TO FABRICATION AND INSTALLATION OF MATERIALS AND EQUIPMENT.

3 COORDINATE WORK WITH OTHER TRADES.

4 FURNISH AND INSTALL FIXTURES AS SPECIFIED IN FIXTURE SCHEDULE THIS DRAWING.

5 EACH PLUMBING FIXTURE SHALL BE PROVIDED WITH WATER HAMMER ARRESTORS OR SHOCK ABSORBERS PER FLORIDA BUILDING CODE.

6 PROVIDE SHUT-OFF VALVE FOR EACH FIXTURE.

7 WHEREVER DISSMILAR METALS ARE TO BE JOINED, A DIELECTRIC FITTING SHALL BE PROVIDED TO CONNECT BOTH TYPES OF PIPES.

8 PROVIDE PIPING AS FOLLOW:
DOMESTIC COLD AND HOT WATER AND WATER HEATER RELIEF PIPING COPPER TUBE TYPE " K " OR " L " WITH SOLDER JOINTS, MIN. 125 LB. WGO BRONZE VALVES.
SANITARY WASTE AND VENT: BELL AND SPIGOT CAST IRON PIPING WITH COMPRESSION GASKETS UNDERGROUND, NO-HUB CAST IRON PIPING OR COPPER DWV ABOVE FLOOR SLAB.
AIR CONDITIONING CONDENSATE : COPPER DWV AND FITTINGS OR PVC PIPE SCHEDULE 40

9 INSULATE AIR CONDITIONING DRAINAGE PIPING WITH 3/4" THICK CLOSE CELL POLYTHYNE PIPING INSULATION.

10 DRAIN, TRAPS, CLEANOUTS AND SPECIALTIES;
A. - INTERIOR FLOOR CLEANOUTS, JOSAM 56020 OR EQUAL, NIKALOY COVER
B. - EXTERIOR CLEANOUTS , JOSAM 58440-5 OR EQUAL
C.- WALL CLEANOUT: CAST IRON " T " BRANCH WITH BRASS COUNTERSUNK PLUG, C.B. ACCESS COVER WITH SATIN CHROME PLATED TOP, JOSAM 58770-3-12 OR EQUAL.

11 PVC SCH. 40 PIPE MAY BE USED FOR SANITARY WASTE AND VENT SYSTEM WHERE PERMITTED BY CODE AND SHALL NOT BE INSTALLED IN RETURN PLENUM.

12 FOR WATER AND SEWER SIZING SEE RISER DIAGRAMS AND FLOOR PLANS.

13 CONDENSATE LINES SHALL BE INSULATED WITH 3/4" FIRE RETARDANT ARMAFLEX INSULATION WITH A MAXIMUM OF 25/50 FLAME SPREAD AND SMOKE DEVELOPED RESPECTIVELY.
HOT WATER LINES SHALL BE INSULATED WITH 1" FIRE RETARDANT ARMAFLEX INSULATION WITH A MAXIMUM OF 25/50 FLAME SPREAD AND SMOKE DEVELOPED RESPECTIVELY.

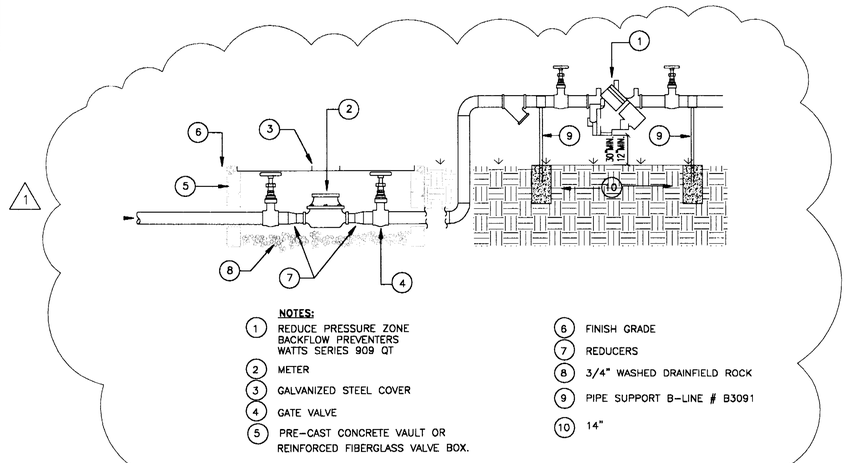

NOTES:
1. REDUCE PRESSURE ZONE BACKFLOW PREVENTERS WATTS SERIES 909 QT
2. METER
3. GALVANIZED STEEL COVER
4. GATE VALVE
5. PRE-CAST CONCRETE VAULT OR REINFORCED FIBERGLASS VALVE BOX.
6. FINISH GRADE
7. REDUCERS
8. 3/4" WASHED DRAINFIELD ROCK
9. PIPE SUPPORT B-LINE # B3091
10. 14"

WATER METER ENCLOSURE & BACKFLOW PREVENTOR DETAIL
N.T.S.

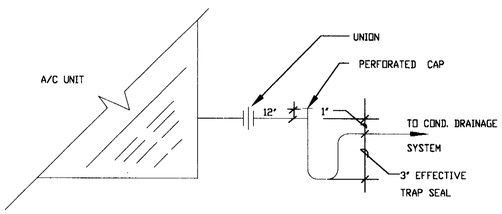

A/C CONDENSATE CONN. DETAIL
N.T.S.

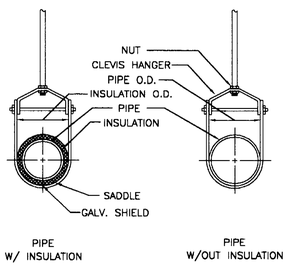

PIPE HANGERS-CLEVIS TYPE DETAIL
N.T.S.

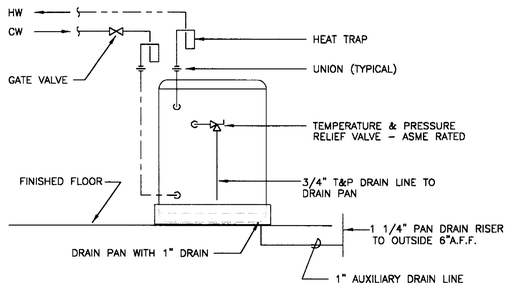

ELECTRIC WATER HEATER BELOW AHU- DETAIL
NO SCALE

DRAWN BY:

REVISIONS:
1 01-22-07 BLDG. DPT. COMMENTS

2 DESIGN INC
ANTHONY LEON
AR0016752
ARCHITECTURE
1550 BISCAYNE BLVD. SUITE#604 MIAMI, FL 33137 T:305.438.9377 F:305.438.9378

SEAL

NEW BLGD FOR
1529 JEFFERSON AVE
MIAMI BEACH, FL
33139

OFFICE COPY
MIAMI BEACH
PERMIT BY
ING:
JUN 12 200
ENGINEERING:
PUBLIC WORKS:
STRUCTURAL:
ACCESSIBILITY:

Innovative Engineering Group Inc. CA#6717
5532 N.W. 72nd Ave
Miami, FL 33166
305-888-9626
Sudhir K. Gupta, P.E.
Fla. Reg. No. 29189

P-1
JUNE 6, 2006

2/8/07

PRODUCED BY AN AUTODESK EDUCATIONAL PRODUCT
PRODUCED BY AN AUTODESK EDUCATIONAL PRODUCT
PRODUCED BY AN AUTODESK EDUCATIONAL PRODUCT

PLUMBING FIXTURE CONNECTION SCHEDULE

NO.	DESCRIPTION	DRAIN	WATER		MANUFACTURER MODEL	TRIM
			COLD	HOT		
WC	WATER CLOSET TANK	3"	1/2"		SELECTED BY OWNER	SELECTED BY OWNER
LAV	LAVATORY	1 1/4"	1/2"	1/2"	SELECTED BY OWNER	SELECTED BY OWNER
TUB	SHOWER/BATHTUB	2"	3/4"	3/4"	SELECTED BY OWNER	SELECTED BY OWNER
KSK	KITCHEN SINK	1 1/2"	1/2"	1/2"	SELECTED BY OWNER	SELECTED BY OWNER
WM	WASHER MACHINE	2"	1/2"	1/2"	SELECTED BY OWNER	SELECTED BY OWNER

PROVIDE ANTI-SCALD VALVE FOR TUB

WATER HEATER SCHEDULE

SYMBOL	SERVICE	GAL. CAP.	RECOV. @ 100° RISE	ELECTRICAL REQUIREMENTS	MANUFACTURER/MODEL
EWH-1	RESIDENCE BELOW AHU	40	20.5	240-1-60 4.5 KW	LONCHINVAR LSA040KK(SHORT MODEL)

PLUMBING LEGEND

SAN	SANITARY DRAIN
V	SANITARY VENT LINE
CW	COLD WATER
HW	HOT WATER
CD	CONDENSATE DRAIN
GV	GATE VALVE
SHA	WATER HAMMER ARRESTOR
CO	CLEAN-OUT PLUG
G	GAS PIPING
GW	GREASE WASTE PIPING
HWC	HOT WATER CIRCULATING
WCO	WALL CLEAN-OUT
VTR	VENT THRU ROOF
HB	HOSE BIBB
VB	VACUUM BREAKER

PLUMBING NOTES

1 ALL PLUMBING SHALL BE DONE IN ACCORDANCE WITH THE FLORIDA BUILDING CODE, STATE AND LOCAL ORDINANCES.

2 PLUMBING CONTRACTOR SHALL VERIFY ALL SPACE CONDITIONES AND DIMENSIONS AT JOB SITE PRIOR TO FABRICATION AND INSTALLATION OF MATERIALS AND EQUIPMENT.

3 COORDINATE WORK WITH OTHER TRADES.

4 FURNISH AND INSTALL FIXTURES AS SPECIFIED IN FIXTURE SCHEDULE THIS DRAWING.

5 EACH PLUMBING FIXTURE SHALL BE PROVIDED WITH WATER HAMMER ARRESTORS OR SHOCK ABSORBERS PER FLORIDA BUILDING CODE.

6 PROVIDE SHUT-OFF VALVE FOR EACH FIXTURE.

7 WHEREVER DISSMILAR METALS ARE TO BE JOINED, A DIELECTRIC FITTING SHALL BE PROVIDED TO CONNECT BOTH TYPES OF PIPES.

8 PROVIDE PIPING AS FOLLOW:
DOMESTIC COLD AND HOT WATER AND WATER HEATER RELIEF PIPING COPPER TUBE TYPE " K " OR " L " WITH SOLDER JOINTS, MIN. 125 LB. WOG BRONZE VALVES.
SANITARY WASTE AND VENT: BELL AND SPIGOT CAST IRON PIPING WITH COMPRESSION GASKETS UNDERGROUND, NO-HUB CAST IRON PIPING OR COPPER DWV ABOVE FLOOR SLAB.
AIR CONDITIONING CONDENSATE : COPPER DWV AND FITTINGS OR PVC PIPE SCHEDULE 40

9 INSULATE AIR CONDITIONING DRAINAGE PIPING WITH 3/4" THICK CLOSE CELL POLYTHYNE PIPING INSULATION.

10 DRAIN, TRAPS, CLEANOUTS AND SPECIALTIES;
A. - INTERIOR FLOOR CLEANOUTS, JOSAM 56020 OR EQUAL, NIKALOY COVER
B. - EXTERIOR CLEANOUTS , JOSAM 58440-5 OR EQUAL
C.- WALL CLEANOUT: CAST IRON " T " BRANCH WITH BRASS COUNTERSUNK PLUG, C.B. ACCESS COVER WITH SATIN CHROME PLATED TOP, JOSAM 58770-3-12 OR EQUAL.

11 PVC SCH. 40 PIPE MAY BE USED FOR SANITARY WASTE AND VENT SYSTEM WHERE PERMITTED BY CODE AND SHALL NOT BE INSTALLED IN RETURN PLENUM.

12 FOR WATER AND SEWER SIZING SEE RISER DIAGRAMS AND FLOOR PLANS.

13 CONDENSATE LINES SHALL BE INSULATED WITH 3/4" FIRE RETARDANT ARMAFLEX INSULATION WITH A MAXIMUM OF 25/50 FLAME SPREAD AND SMOKE DEVELOPED RESPECTIVELY.
HOT WATER LINES SHALL BE INSULATED WITH 1" FIRE RETARDANT ARMAFLEX INSULATION WITH A MAXIMUM OF 25/50 FLAME SPREAD AND SMOKE DEVELOPED RESPECTIVELY.

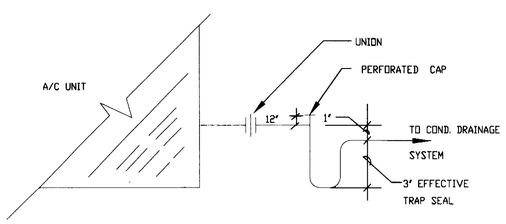

A/C CONDENSATE CONN. DETAIL
N.T.S.

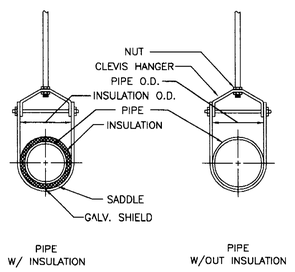

PIPE HANGERS-CLEVIS TYPE DETAIL
N.T.S.

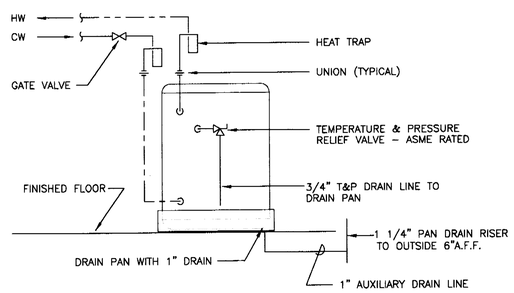

ELECTRIC WATER HEATER BELOW AHU- DETAIL
NO SCALE

DRAWN BY:

REVISIONS:

3DESIGN INC.
ANTHONY LEON
AR0026752
ARCHITECTURE
4500 BISCAYNE BLVD. SUITE#604 MIAMI, FL 33137 T.305.438.9377 F.305.438.9578

SEAL

NEW BLGD
FOR
1529 JEFFERSON AVE
MIAMI BEACH, FL
33139

OFFICE COPY
CITY OF MIAMI BEACH
APPROVED FOR PERMIT BY
THE FOLLOWING:
BUILDING:
ZONING:
DRB/HPB:
CONCURRENCY:
PLUMBING:
ELECTRICAL:
MECHANICAL:
FIRE PREVENTION:
ENGINEERING:
PUBLIC WORKS:
STRUCTURAL:
ELEVATOR:
CITY OF MIAMI BEACH
As per Plans
REVIEWED BY:

Innovative Engineering Group Inc. CA#6717
5532 N.W. 72nd Ave
Miami, FL 33166
305-888-9626
Sudhir K. Gupta, P.E.
Fla. Reg. No. 29189

6/15/06

P-1

JUNE 6, 2006

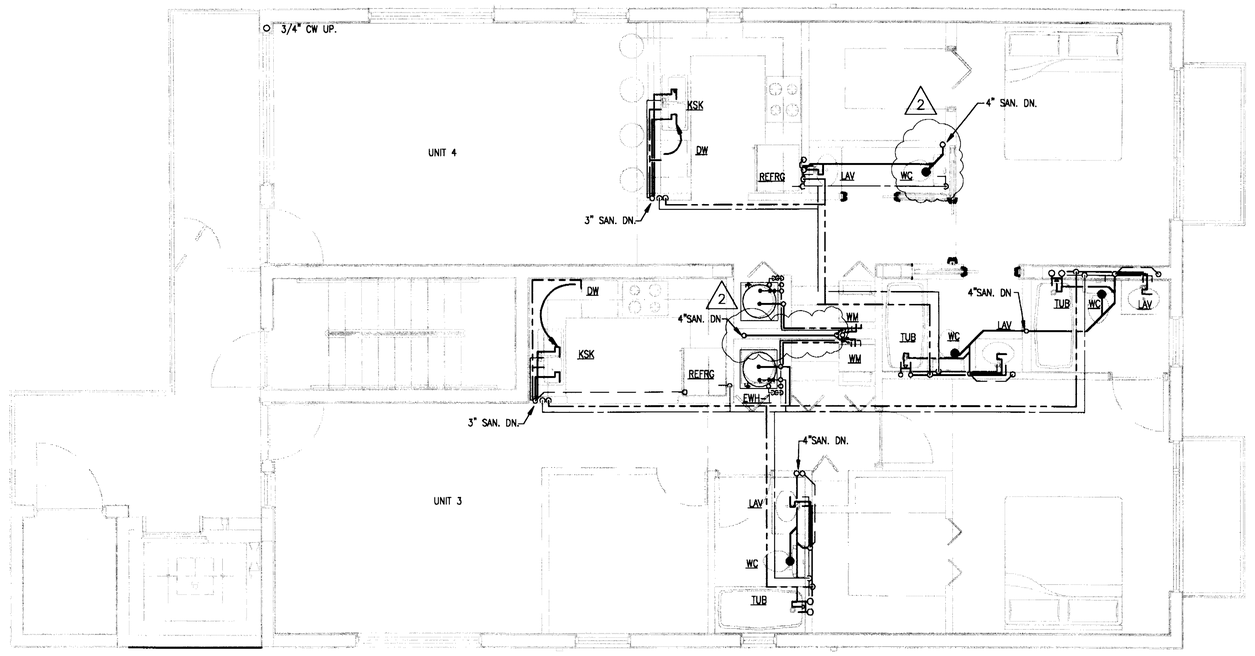

2ND FLOOR PLUMBING PLAN

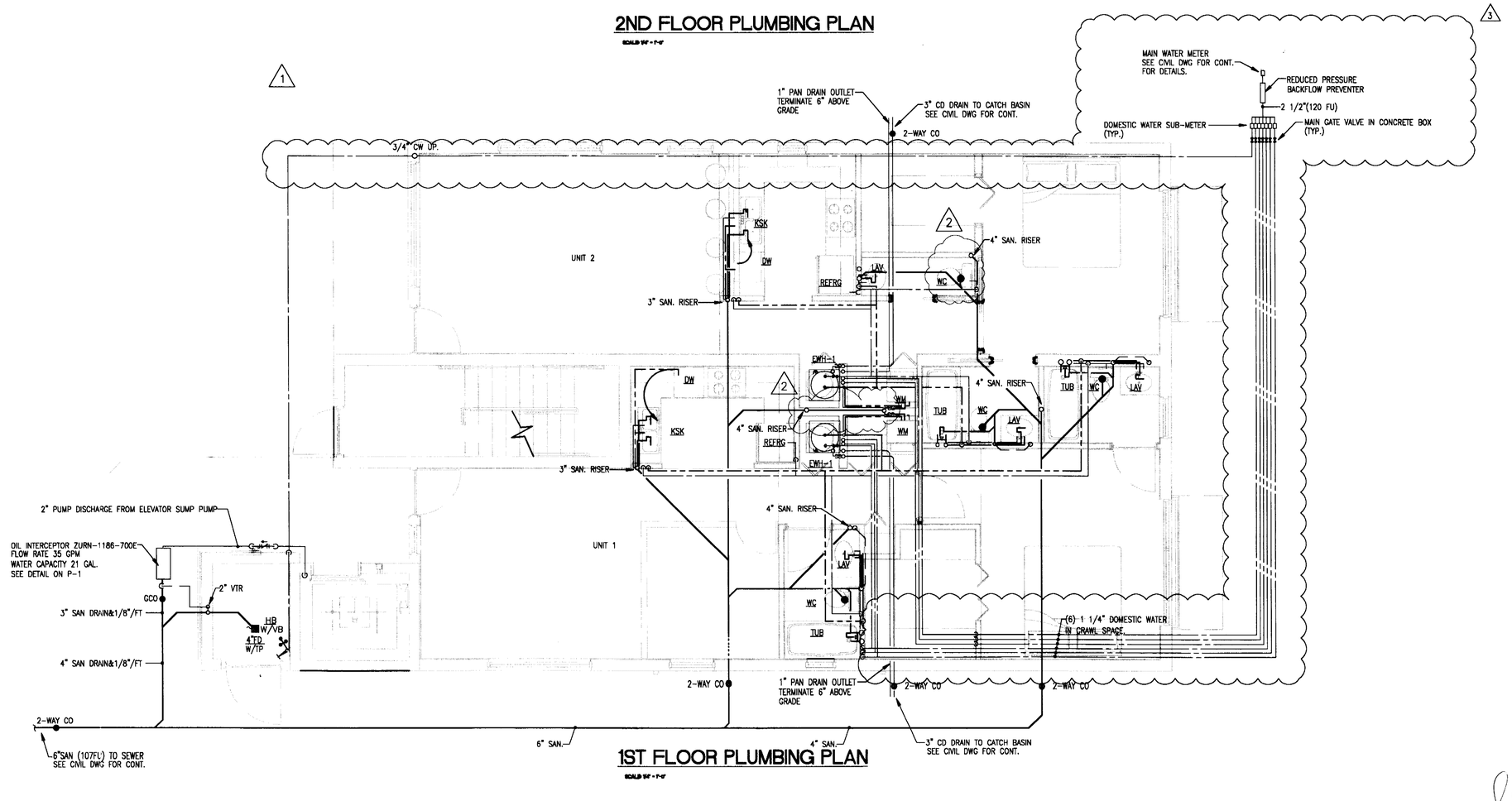

1ST FLOOR PLUMBING PLAN

DRAWN BY:

REVISIONS:

1 ELEC. DEPT. COMMENTS

2 ARCH. COORDINATION

3 ELEC. DEPT. COMMENTS

3DESIGN, INC
ANTHONY LEON
AR0016752
ARCHITECTURE
4300 BISCAYNE BLVD. SUITE#G04 MIAMI, FL 33137 T.305.438.9377 F.305.438.9378

SEAL

NEW BLGD
FOR
1529 JEFFERSON AVE
MIAMI BEACH, FL
33139

Innovative Engineering Group Inc. CA#6717
5532 N.W. 72nd Ave
Miami, FL 33166
305-888-9628
Sudhir K. Gupta, P.E.
Fla. Reg. No. 29189

6/2/07

P-2

JUNE 9, 2006

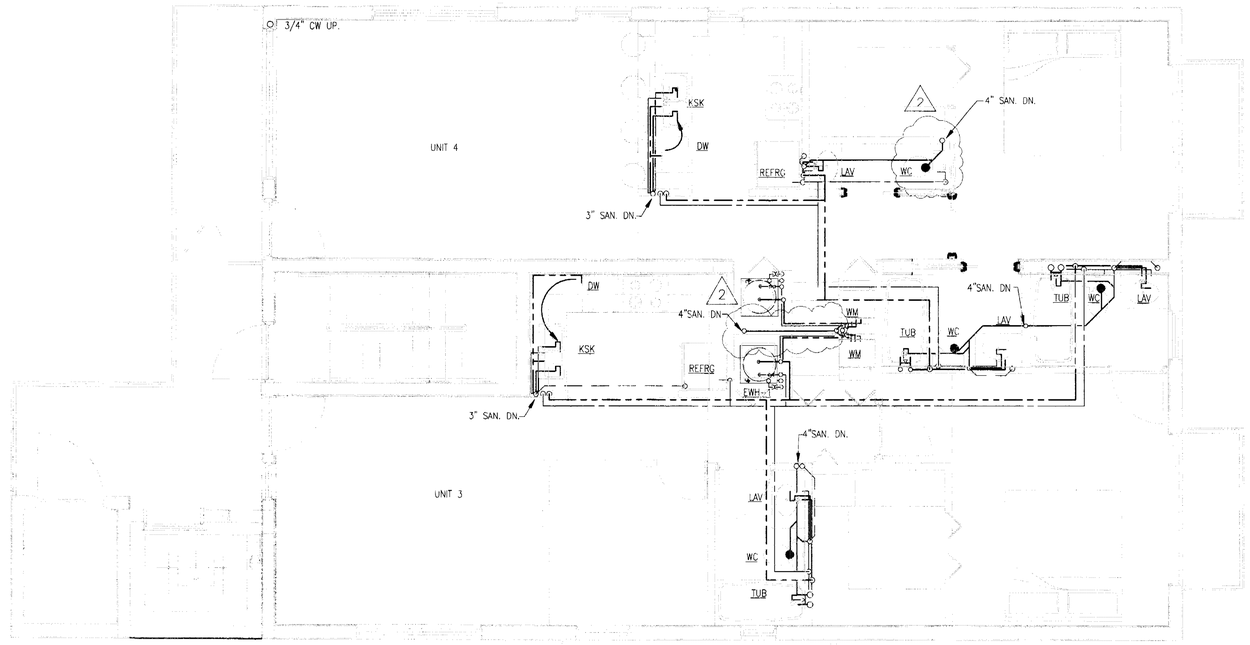

2ND FLOOR PLUMBING PLAN

SCALE: 1/4" = 1'-0"

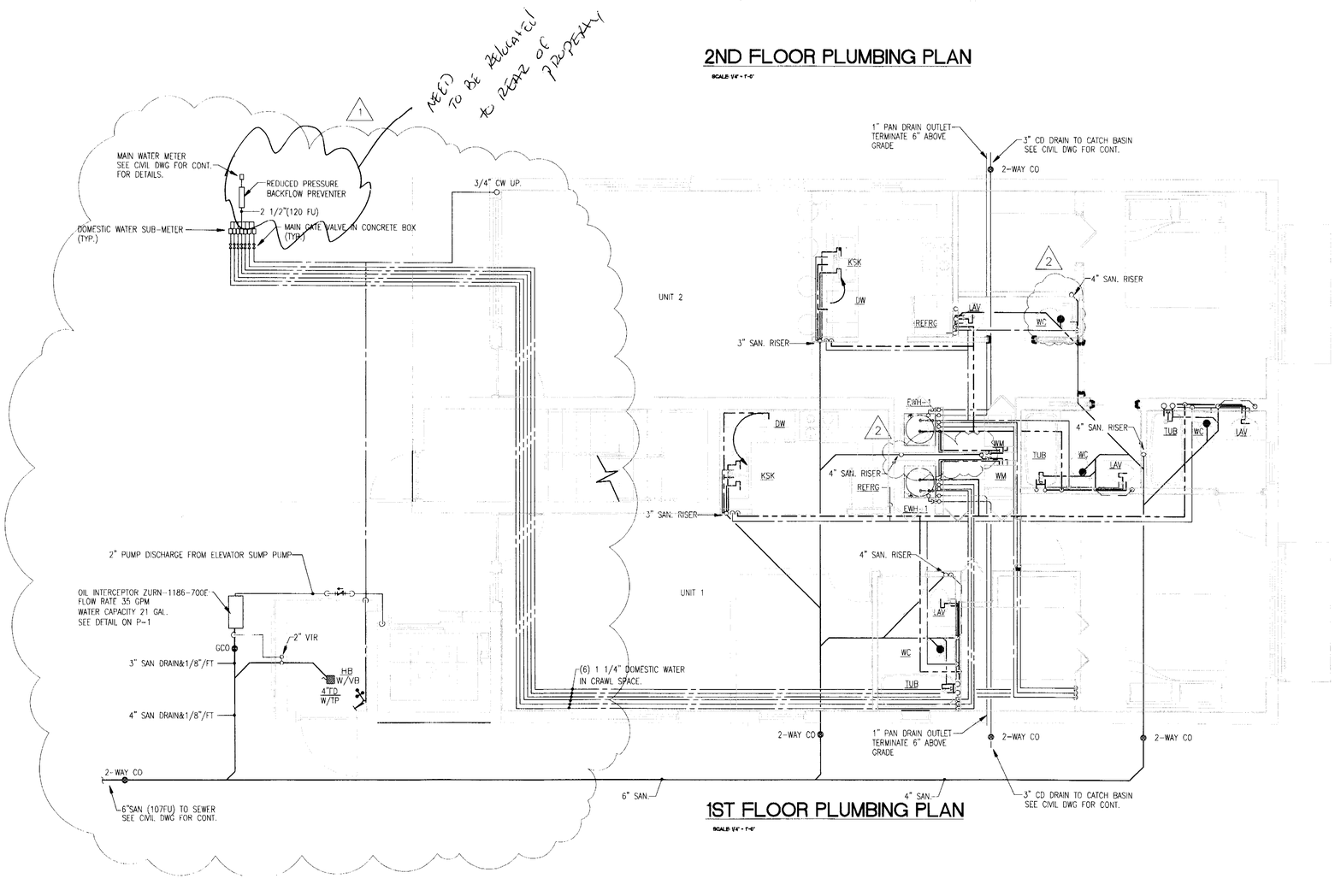

1ST FLOOR PLUMBING PLAN

SCALE: 1/4" = 1'-0"

DRAWN BY:

REVISIONS:

1 08-30-06 BLDG. DPT. COMMENTS

2 01-08-07 ARCH. COORDINATION

3DESIGN, INC.
ANTHONY LEON
AR0016752
ARCHITECTURE
4300 BISCAYNE BLVD. SUITE#G04 MIAMI, FL 33137 T.305.438.9377 F.305.438.9378

SEAL

NEW BLGD
FOR
1529 JEFFERSON AVE
MIAMI BEACH, FL
33139

OFFICE COPY
CITY OF MIAMI BEACH
BEACH
PERMIT BY
NG:
2 JUN 12 2006
SEE note 1E BFP
PROCESSIBILITY:

Innovative Engineering Group Inc. CA#6717
5532 N.W. 72nd Ave
Miami, FL 33166
305-888-9626
Sudhir K. Gupta, P.E.
Fla. Reg. No. 29189

P-2

JUNE 6, 2006

2/8/07

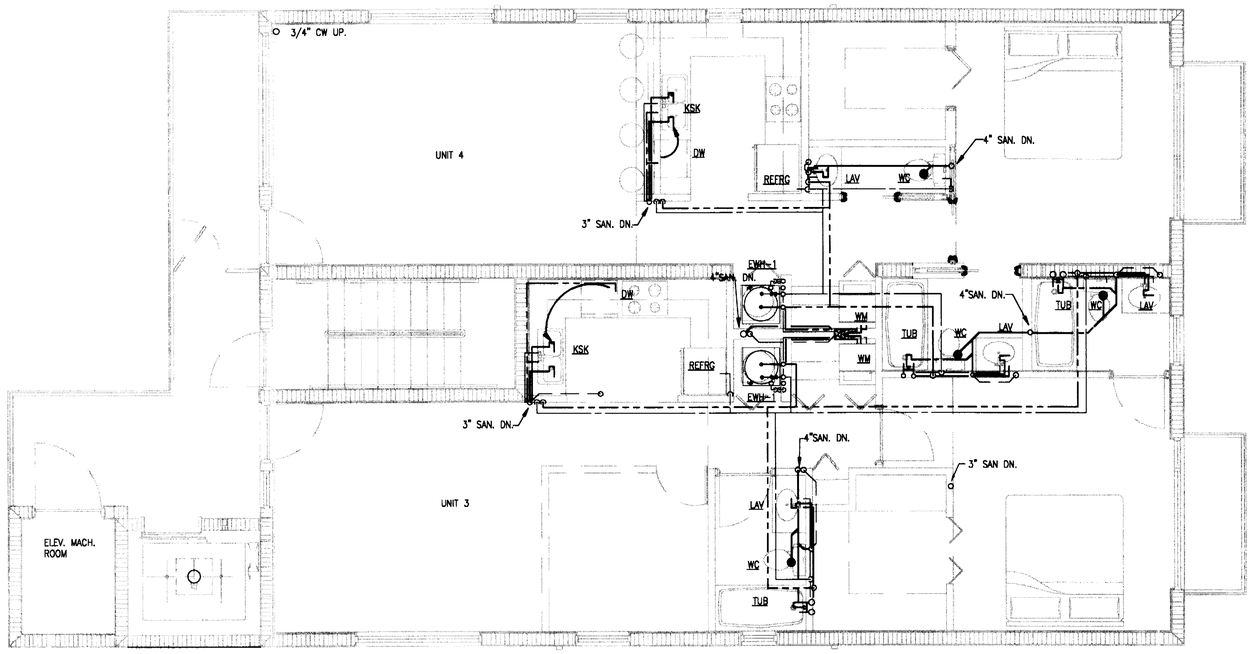

2ND FLOOR PLUMBING PLAN

SCALE: 1/4" = 1'-0"

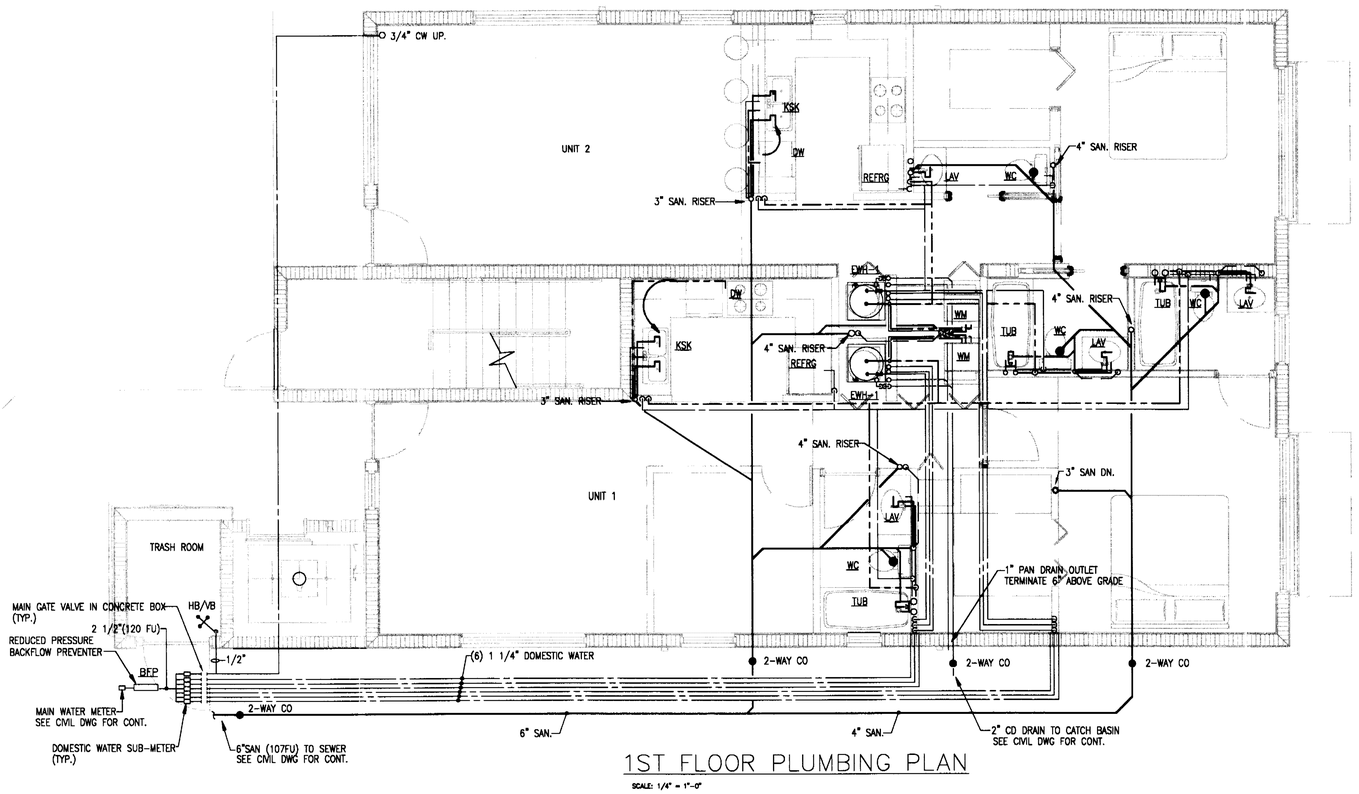

1ST FLOOR PLUMBING PLAN

SCALE: 1/4" = 1'-0"

DRAWN BY:

REVISIONS:

OWNER REV. 11-9-06

2DESIGN INC
ANTHONY LEON
ARCHITECTURE
AR0010752
4300 BISCAYNE BLVD. SUITE#604 MIAMI, FL 33137 T.305.438.9377 F.305.438.9378

SEAL

NEW BLDG
FOR
1529 JEFFERSON AVE
MIAMI BEACH, FL
33139

CITY OF MIAMI BEACH

Innovative Engineering Group Inc. CA#8717
5532 N.W. 72nd Ave
Miami, FL 33166
305-888-9826
Sudhir K. Gupta, P.E.
Fla. Reg. No. 29189

11/14/06

P-2

JUNE 9, 2006

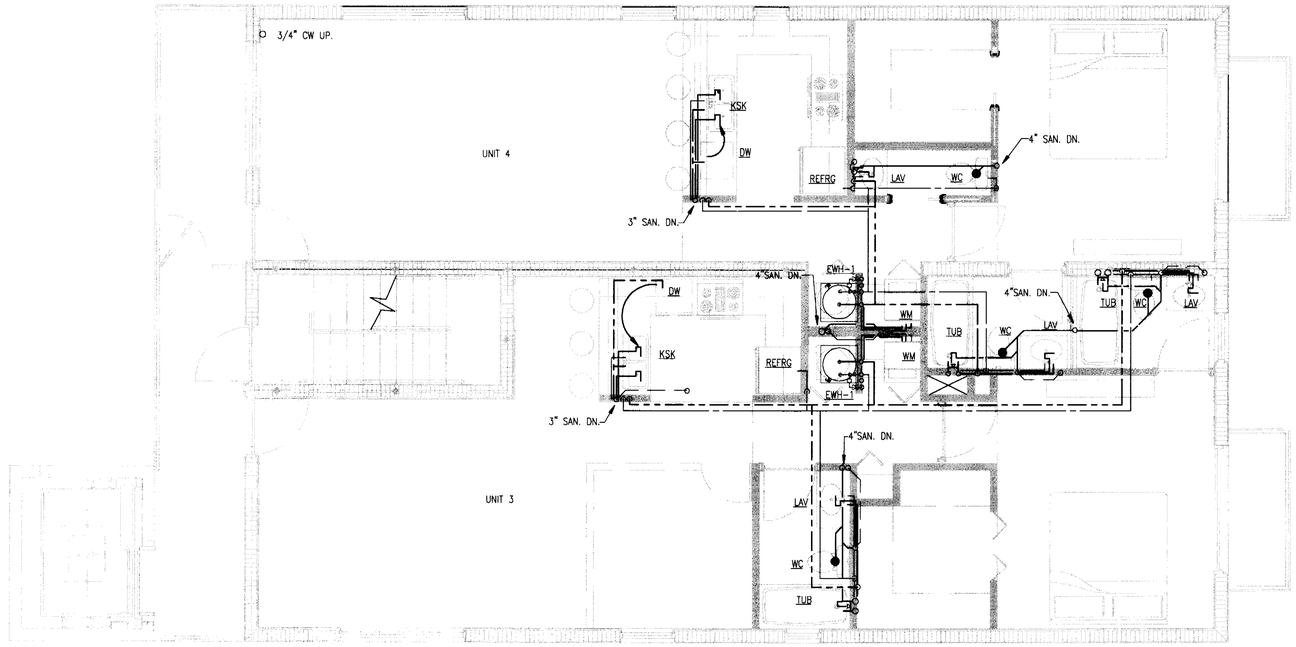

2ND FLOOR PLUMBING PLAN

SCALE: 1/4" = 1'-0"

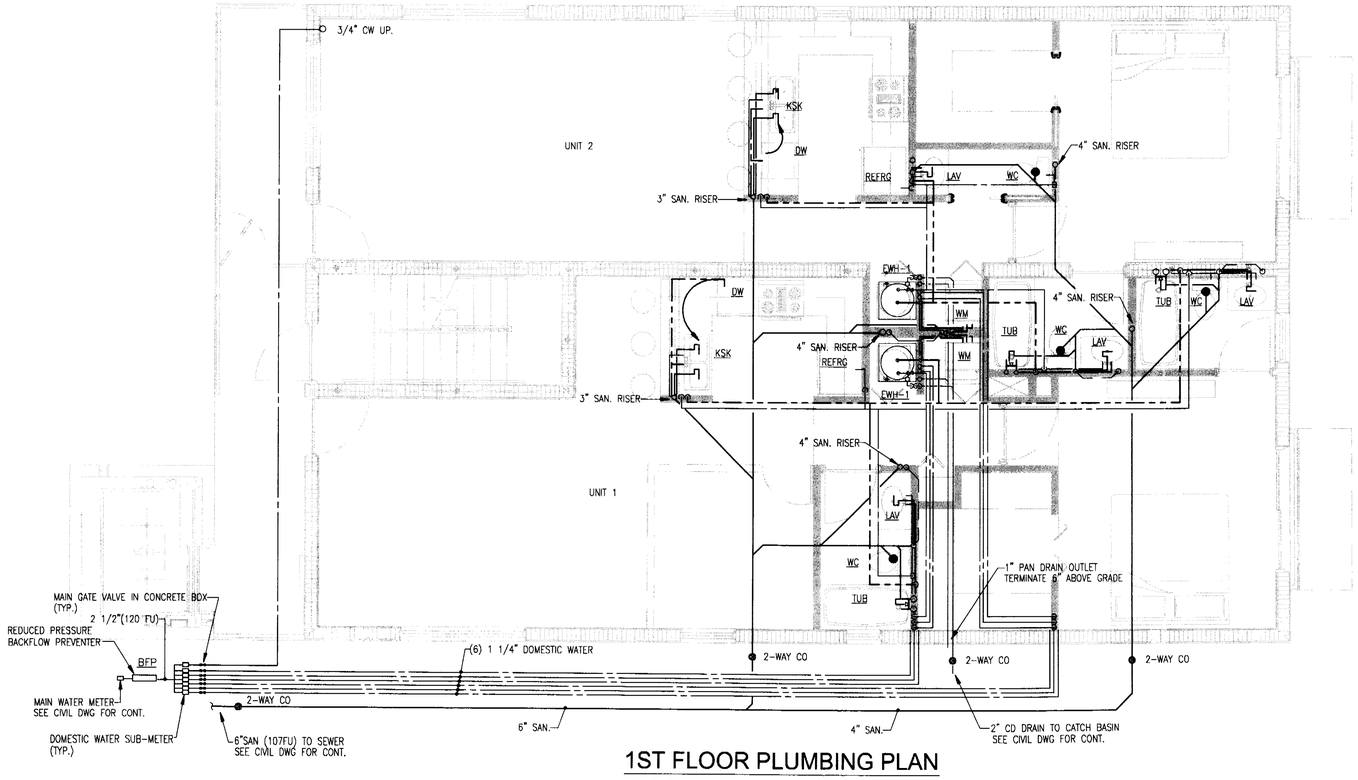

1ST FLOOR PLUMBING PLAN

SCALE: 1/4" = 1'-0"

DRAWN BY:

REVISIONS

3D DESIGN INC.
ANTHONY LEON
ARCHITECTURE
AR0016752
4500 BISCAYNE BLVD. SUITE#604 MIAMI, FL 33137 T.305.438.9377 F.305.438.9378

SEAL

NEW BLGD FOR
1529 JEFFERSON AVE
MIAMI BEACH, FL
33139

BUILDING
ZONING
ORB/HPB
CONCURRENCY
PLUMBING
ELECTRICAL
MECHANICAL
FIRE PREVENTION
ENGINEERING
PUBLIC WORKS
STRUCTURAL
ACCESS
ELEVATOR

CITY OF MIAMI BEACH

Innovative Engineering Group Inc. CA#6717
5532 N.W. 72nd Ave
Miami, FL 33166
305-888-9626
Sudhir K. Gupta, P.E.
Fla. Reg. No. 29189

6/16/06

P-2

JUNE 6, 2006

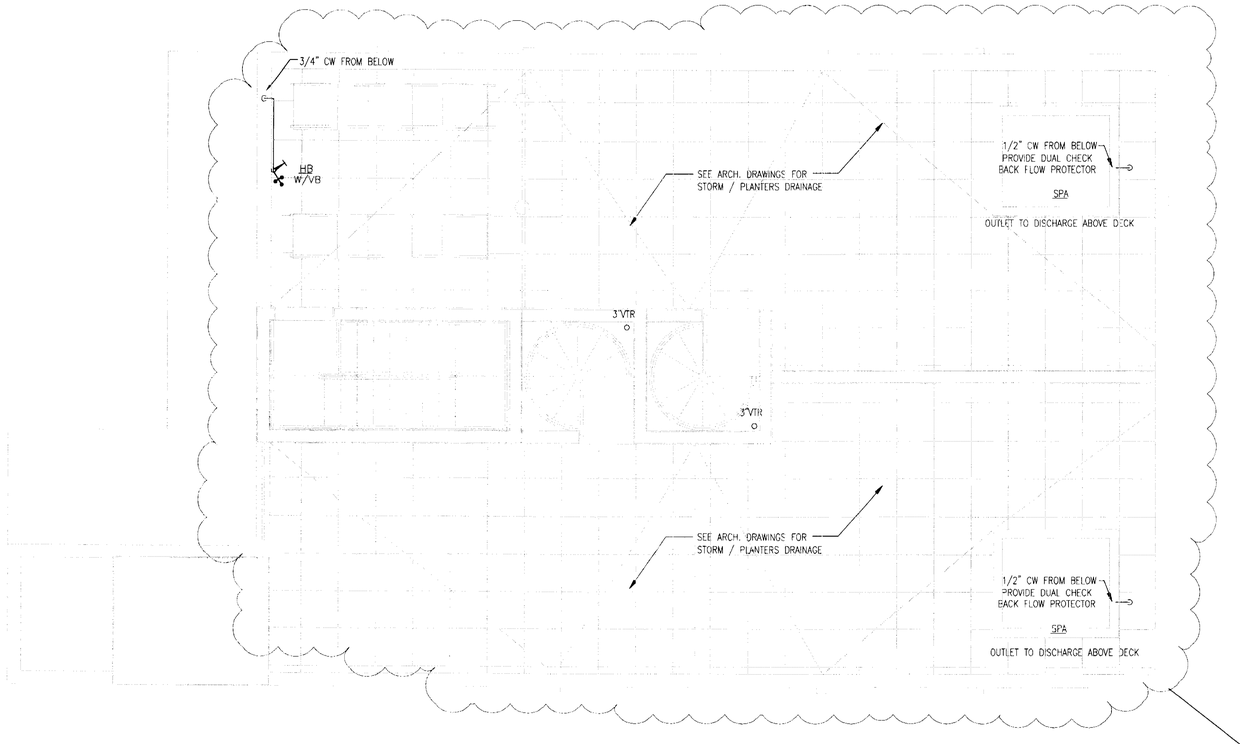

ROOF PLUMBING PLAN

SCALE: 1/4" = 1'-0"

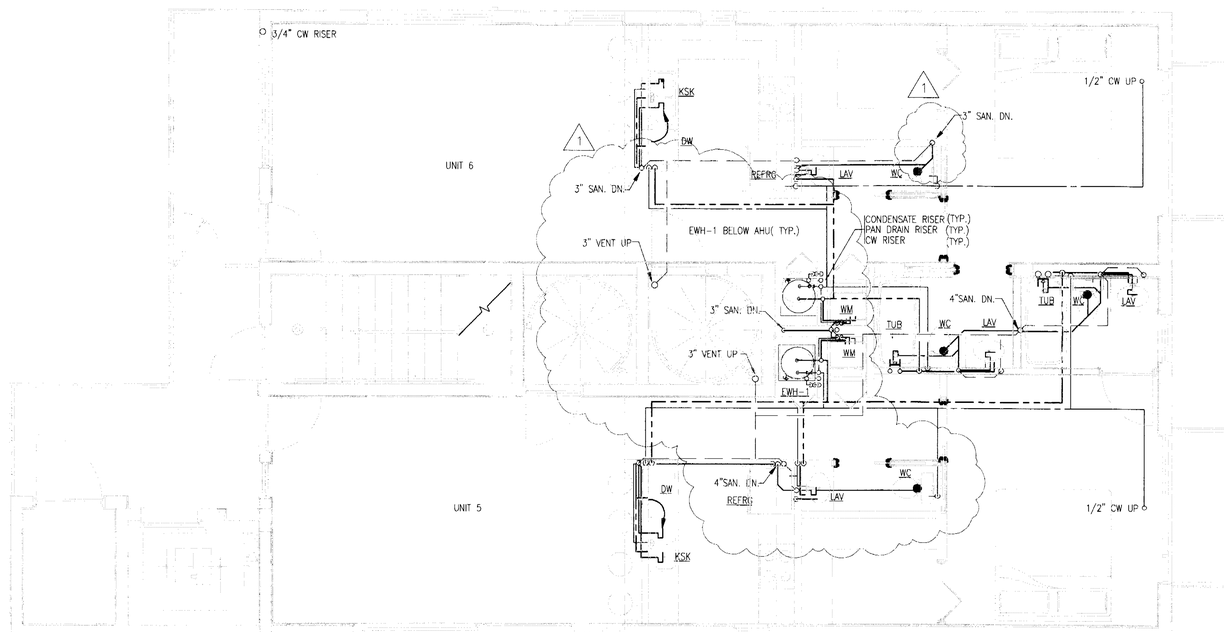

3RD FLOOR PLUMBING PLAN

SCALE: 1/4" = 1'-0"

DRAWN BY:

REVISIONS:

1 01-08-07 ARCH. COORDINATION

3DESIGN INC
ANTHONY LEON
ARCHITECTURE
AR0006752
4500 BISCAYNE BLVD. SUITE#GO4 MIAMI, FL 33137 T.305.458.9577 F.305.458.9578

SEAL

NEW BLGD
FOR
1529 JEFFERSON AVE
MIAMI BEACH, FL
33139

OFFICE COPY
CITY OF MIAMI BEACH
PERMIT BY
ING:
JUN
SIBILITY:

Innovative Engineering
Group Inc. CA#6717
5532 N.W. 72nd Ave
Miami, FL 33166
305-888-9626
Sudhir K. Gupta, P.E.
Fla. Reg. No. 29189

P-3

JUNE 6, 2006

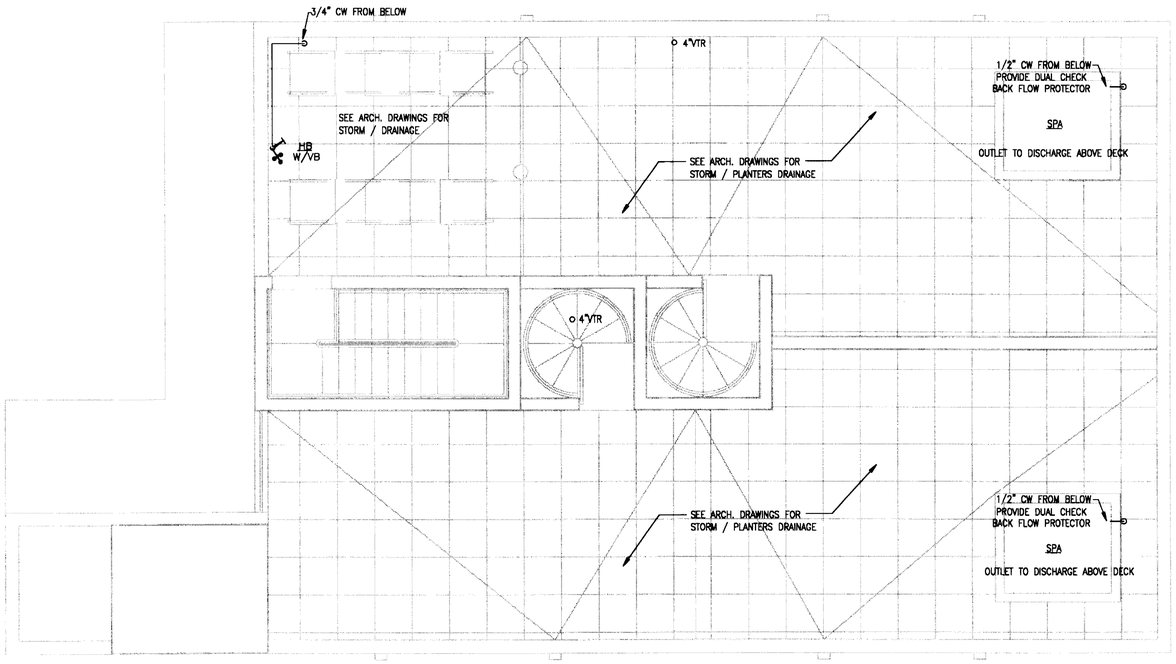

ROOF PLUMBING PLAN

SCALE: 1/4" = 1'-0"

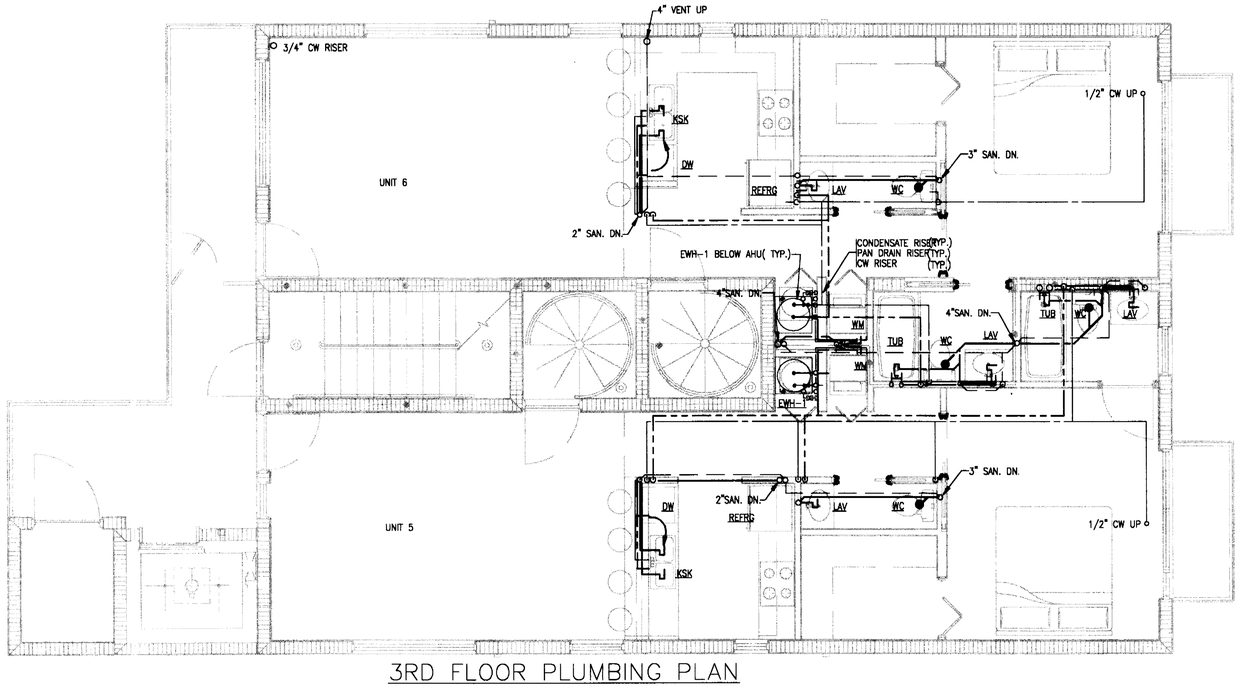

3RD FLOOR PLUMBING PLAN

SCALE: 1/4" = 1'-0"

DRAWN BY:

REVISIONS:

CITY COMM. REV. 11-9-06

3DESIGN INC.
ARCHITECTURE
ANTHONY LEON
AR0018752
4500 BISCAYNE BLVD. SUITE#604 MIAMI, FL 33137 T.305.438.9377 F.305.438.9378

SEAL

NEW BLGD
FOR
1529 JEFFERSON AVE
MIAMI BEACH, FL
33139

CITY OF MIAMI BEACH

11/14/06

Innovative Engineering Group Inc. CA#6717
5532 N.W. 72nd Ave
Miami, FL 33166
305-888-9626
Sudhir K. Gupta, P.E.
Fla. Reg. No. 29189

P-3

JUNE 9, 2006

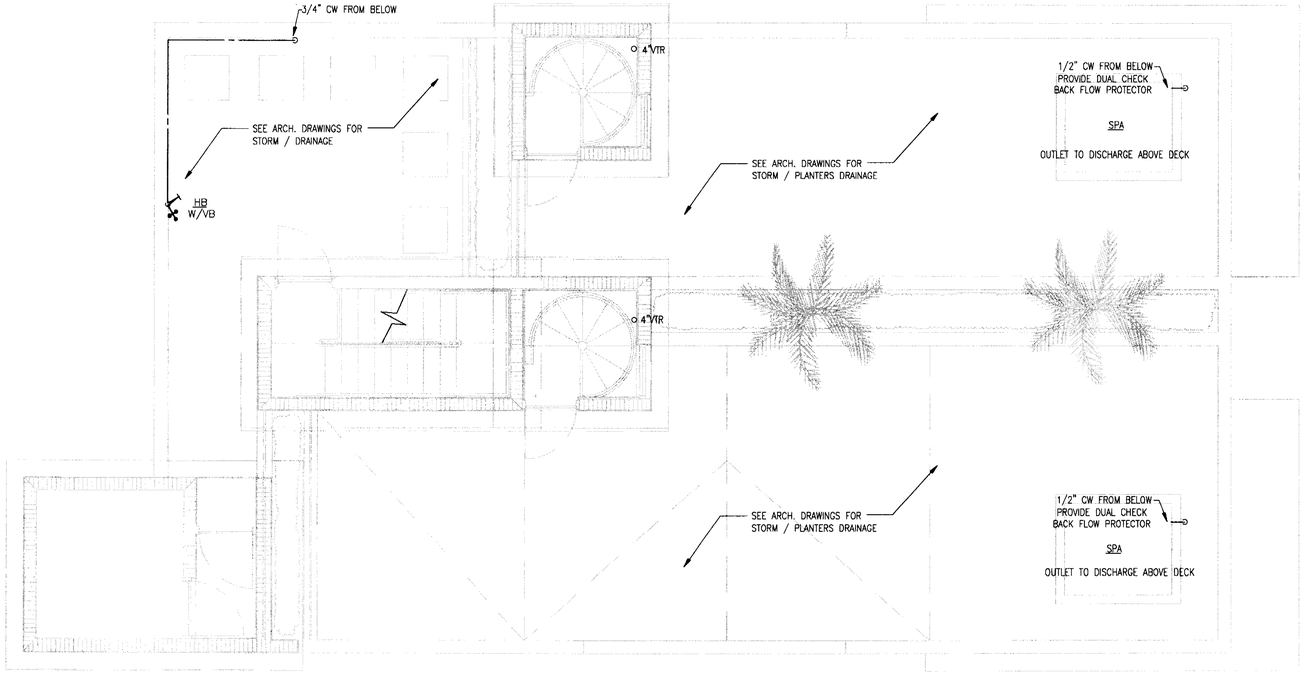

ROOF PLUMBING PLAN

SCALE: 1/4" = 1'-0"

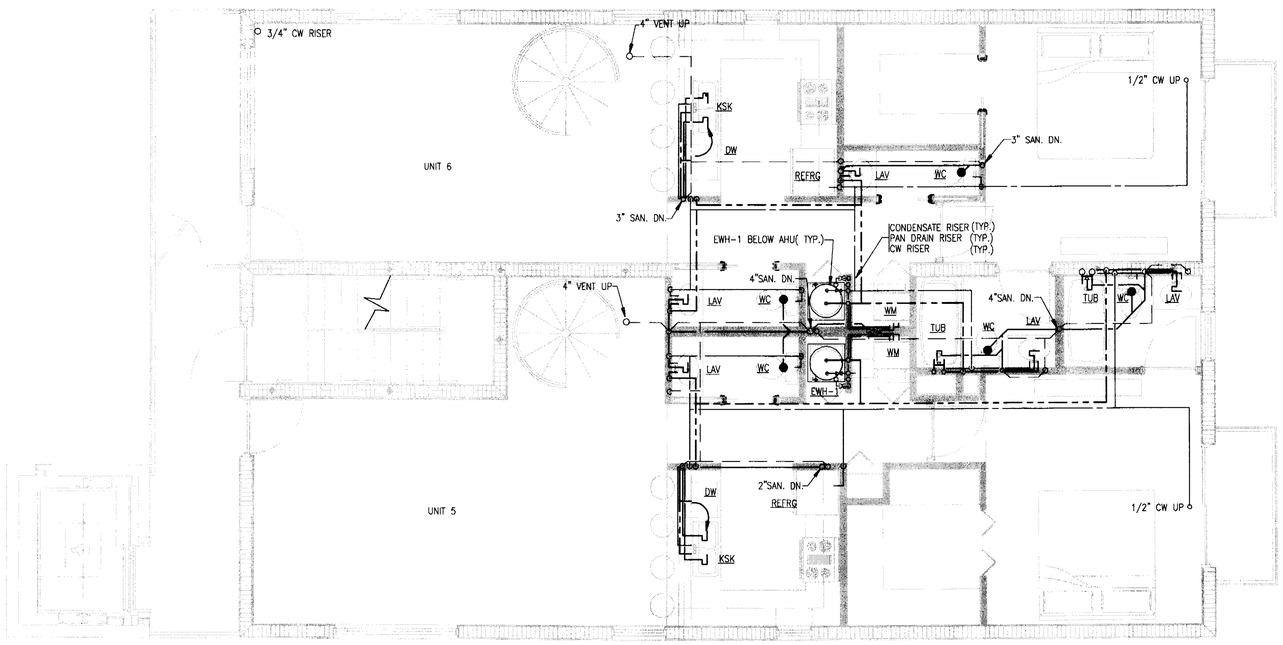

3RD FLOOR PLUMBING PLAN

SCALE: 1/4" = 1'-0"

DRAWN BY:

REVISIONS:

3DESIGN, INC
ANTHONY LEON
AR0016752
ARCHITECTURE
4500 BISCAYNE BLVD. SUITE#604 MIAMI, FL 33137 T.305.438.9377 F.305.438.9378

SEAL

NEW BLGD
FOR
1539 JEFFERSON AVE
MIAMI BEACH, FL
33139

OFFICE COPY
CITY OF MIAMI BEACH
APPROVED AS NOTED BY
PLANNING & ZONING

BUILDING:
ZONING:
DRB/HPB:
CONCURRENCY:
PLUMBING:
ELECTRICAL:
MECHANICAL:
FIRE PREVENTION:
ENGINEERING:
PUBLIC WORKS:
STRUCTURAL:
ACCESSIBILITY:
CLIMATE:

CITY OF MIAMI BEACH

OLD

Innovative Engineering
Group Inc. CA#6717
5532 N.W. 72nd Ave
Miami, FL 33166
305-888-9826
Sudhir K. Gupta, P.E.
Fla. Reg. No. 29189

6/15/06

P-3

JUNE 6, 2006

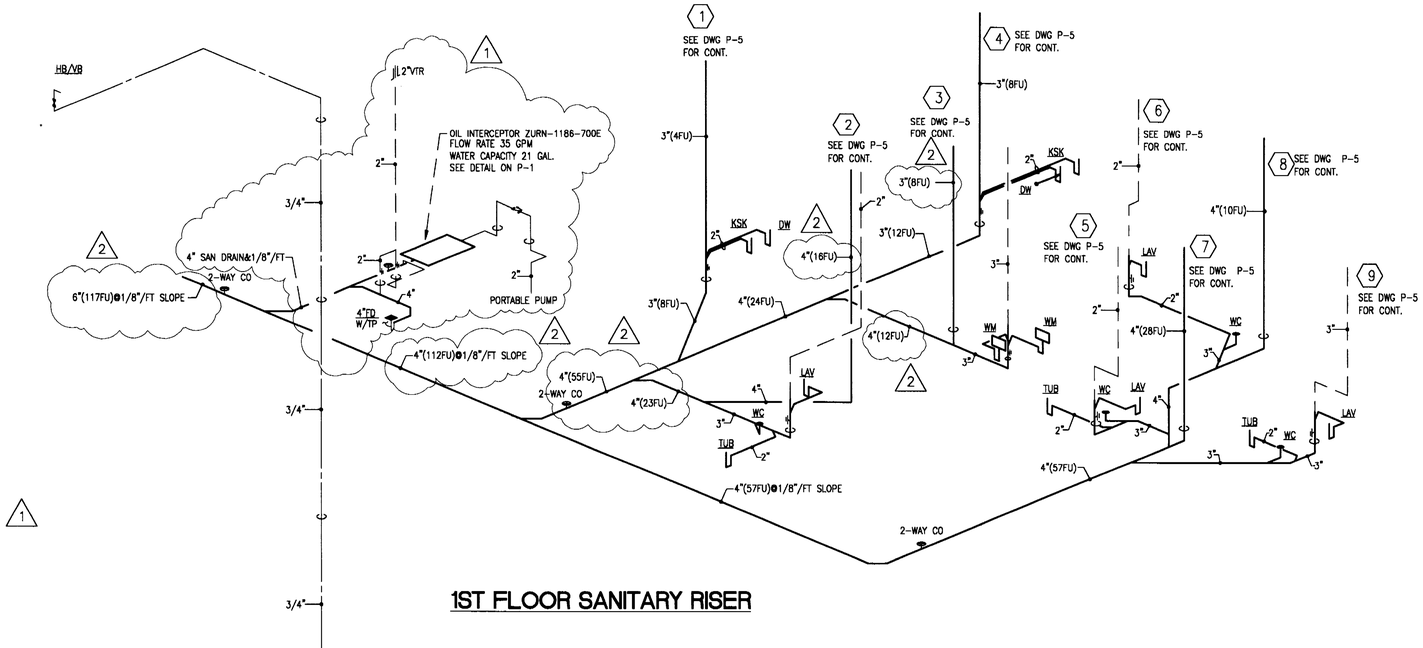

1ST FLOOR SANITARY RISER

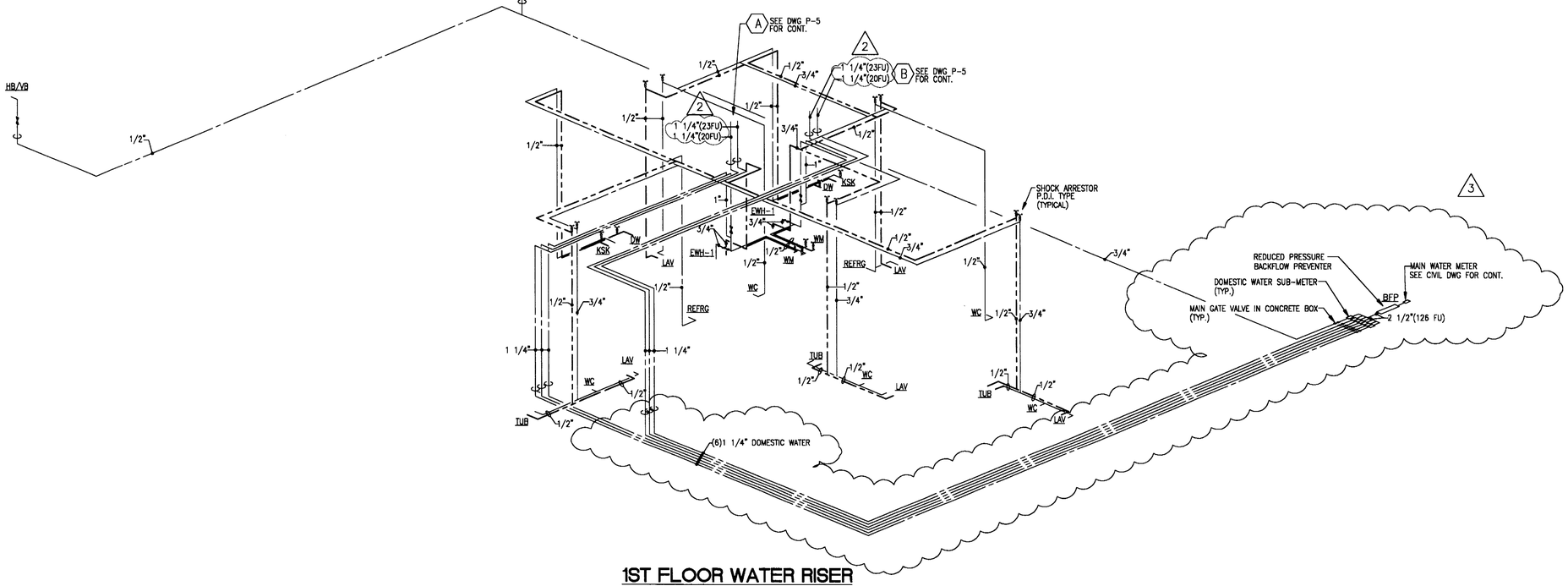

1ST FLOOR WATER RISER

SCALE: 1/4" = 1'-0"

DRAWN BY:

REVISIONS:

1 [illegible] ELEC. DEPT. COMMENTS

2 [illegible] ARCH. COORDINATION

3 [illegible] ELEC. DEPT. COMMENTS

3DESIGN, INC
ANTHONY LEON
AR0016752
ARCHITECTURE
4300 BISCAYNE BLVD. SUITE#G04 MIAMI, FL 33137 T.305.438.9377 F.305.438.9378

SEAL

NEW BLGD
FOR
1529 JEFFERSON AVE
MIAMI BEACH, FL
33139

6/20/07

Innovative Engineering Group Inc. CA#6717
5532 N.W. 72nd Ave
Miami, FL 33166
305-888-9626
Sudhir K. Gupta, P.E.
Fla. Reg. No. 29189

P-4

JUNE 9, 2006

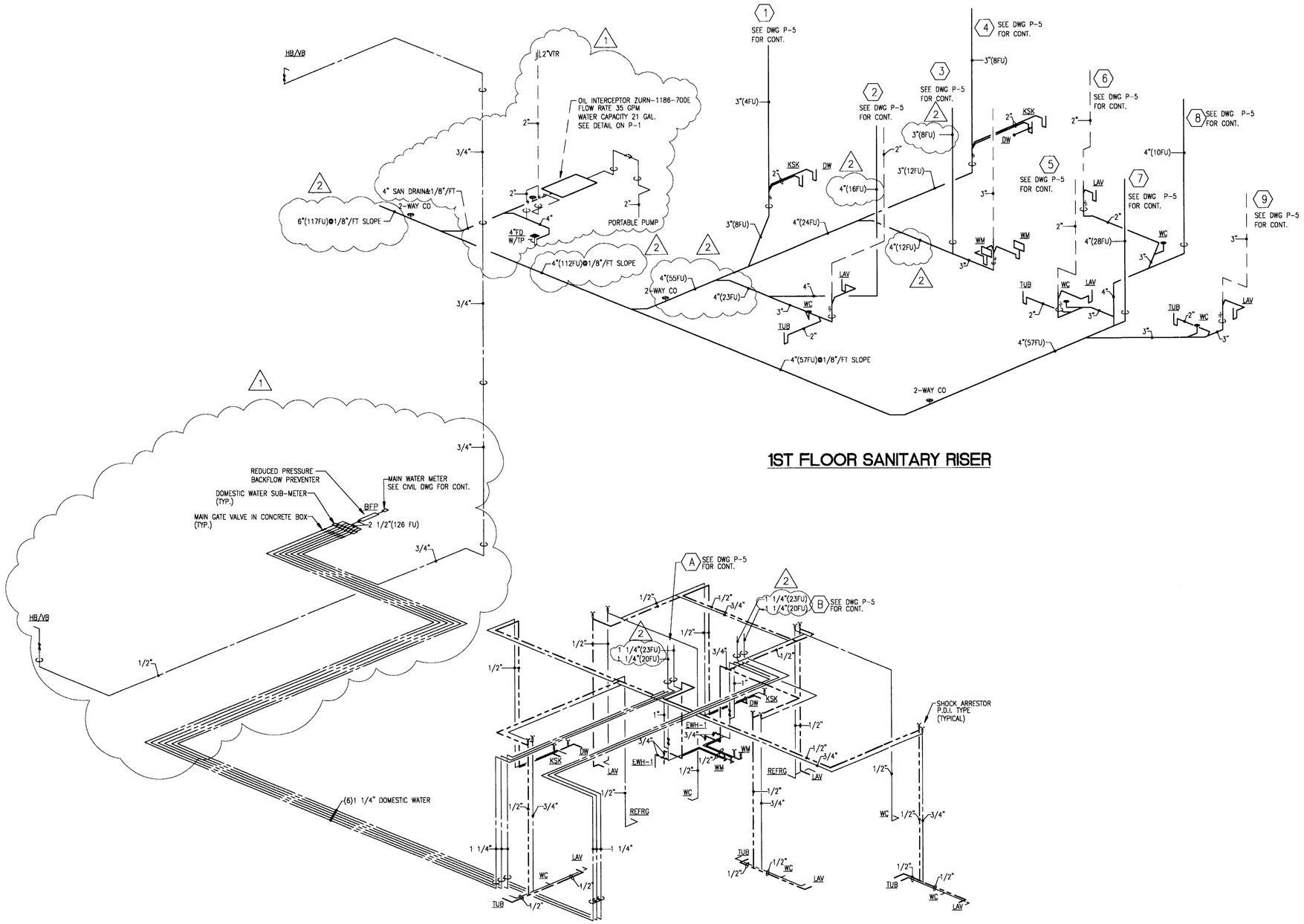

1ST FLOOR SANITARY RISER

1ST FLOOR WATER RISER

SCALE 1/4" = 1'-0"

3D DESIGN INC
ANTHONY LEON
AR0006752
ARCHITECTURE
4200 BISCAYNE BLVD. SUITE#604 MIAMI, FL 33137 T 305 438 9577 F 305 438 9578

DRAWN BY:

REVISIONS:

1 09-29-06 BLDG. DPT. COMMENTS

2 01-29-07 ARCH. COORDINATION

SEAL

NEW BLDG
FOR
1529 JEFFERSON AVE
MIAMI BEACH, FL
33139

OFFICE COPY
MIAMI BEACH
PERMIT BY
PLANNING:
JUN 12 2006
BUILDING:
FIRE PREVENTION:
ENGINEERING:
PUBLIC WORKS:
STRUCTURAL:
ACCESSIBILITY:

Innovative Engineering Group Inc. CA#6717
5532 N.W. 72nd Ave
Miami, FL 33166
305-888-9626
Sudhir K. Gupta, P.E.
Fla. Reg. No. 29169

P-4

JUNE 6, 2006

2/8/07

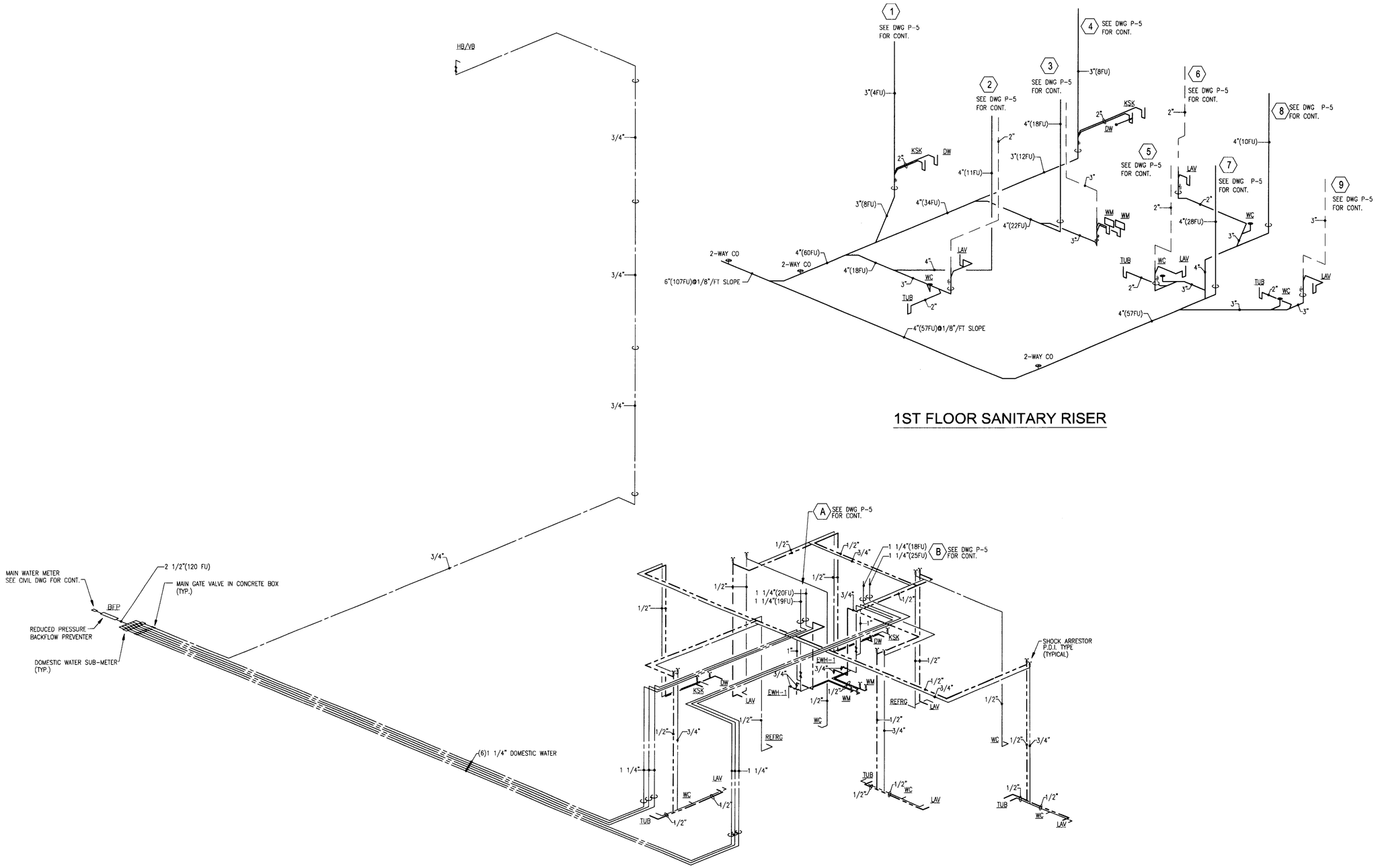

1ST FLOOR WATER RISER

SCALE 1/4" = 1'-0"

1ST FLOOR SANITARY RISER

DRAWN BY:

REVISIONS:

3DESIGN INC
ANTHONY LEON
AR0006752
ARCHITECTURE
4300 BISCAYNE BLVD. SUITE#G04 MIAMI, FL 33137 T.305.438.9377 F.305.438.9378

SEAL

NEW BLGD
FOR
1529 JEFFERSON AVE
MIAMI BEACH, FL
33139

OFFICE COPY
CITY OF MIAMI BEACH
APPROVED FOR PERMIT BY
THE FOLLOWING:

BUILDING:
ZONING:
DRB/HPB:
CONCURRENCY:
PLUMBING:
ELECTRICAL:
MECHANICAL:
FIRE PREVENTION:
ENGINEERING:
PUBLIC WORKS:
STRUCTURAL:
ACCESSIBILITY:
ELEVATOR:

CITY OF MIAMI BEACH
VOID

Innovative Engineering
Group Inc. CA#6717
5532 N.W. 72nd Ave
Miami, FL 33166
305-888-9626
Sudhir K. Gupta, P.E.
Fla. Reg. No. 29189

6/10/06

P-4

JUNE 6, 2006

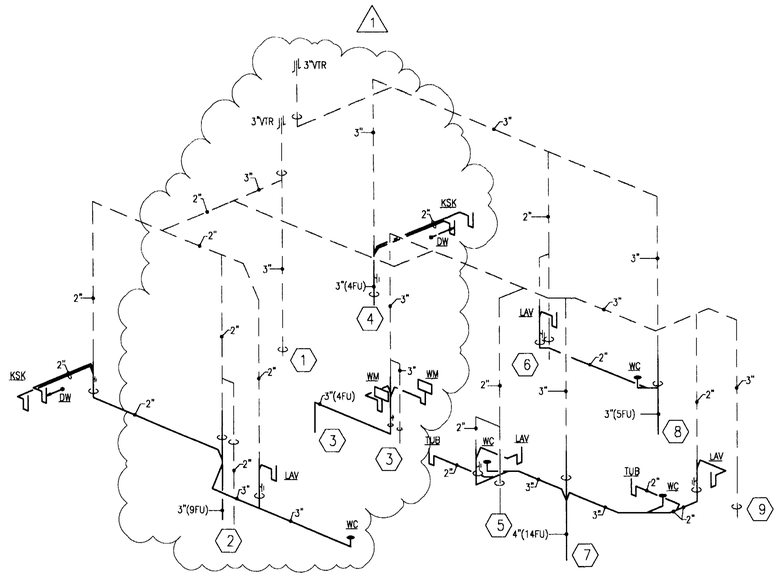

3RD FLOOR SANITARY RISER

SCALE 1/4" = 1'-0"

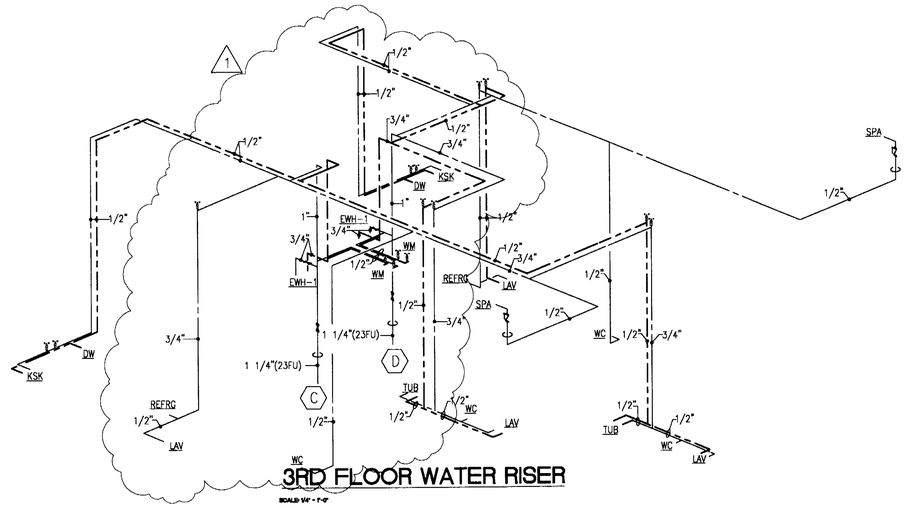

3RD FLOOR WATER RISER

SCALE 1/4" = 1'-0"

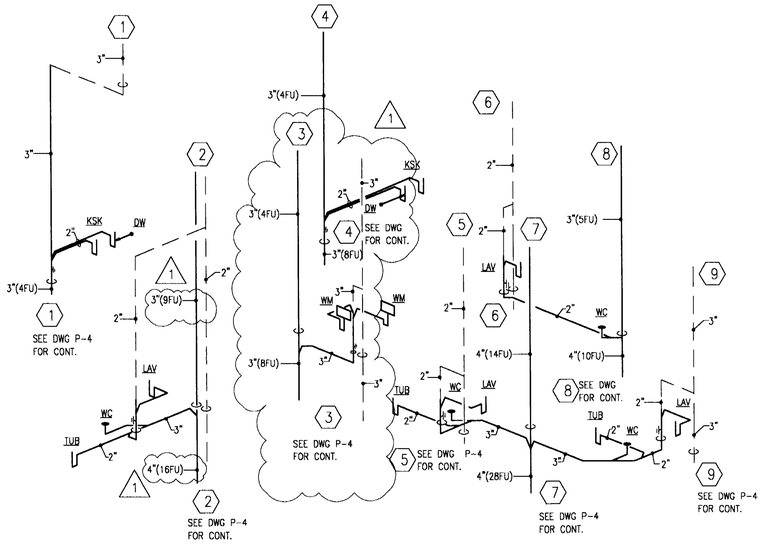

2ND FLOOR SANITARY RISER

SCALE 1/4" = 1'-0"

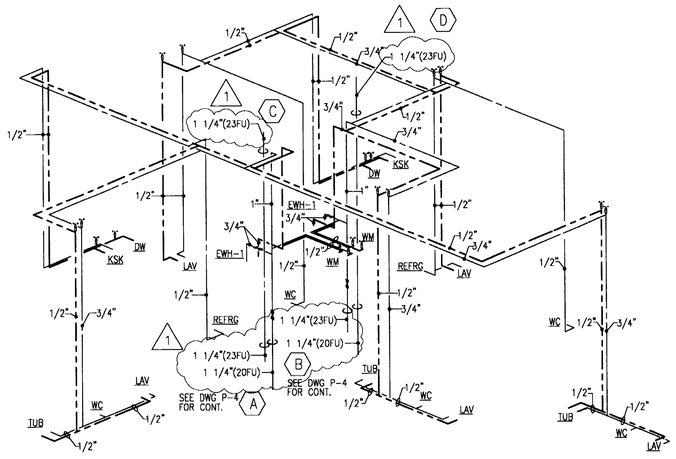

2ND FLOOR WATER RISER

SCALE 1/4" = 1'-0"

DRAWN BY:

REVISIONS:

1 04-28-06 ARCH. COORDINATION

3D DESIGN INC
ARCHITECTURE
ANTHONY LEON
AR0006252
4200 BISCAYNE BLVD. SUITE #204 MIAMI, FL 33137 T 305.438.9377 F 305.438.9378

SEAL

NEW BLDG FOR 1529 JEFFERSON AVE MIAMI BEACH, FL 33139

OFFICE COPY
MIAMI BEACH
PERMIT BY
BLDG:
JUN 12 2006
ELECTRICAL:
PUBLIC WORKS:
STRUCTURAL:
ACCESSIBILITY:

Innovative Engineering Group Inc. CA#6717
5532 N.W. 72nd Ave
Miami, FL 33166
305-668-9626
Sudhir K. Gupta, P.E.
Fla. Reg. No. 29189

P-5

JUNE 6, 2006

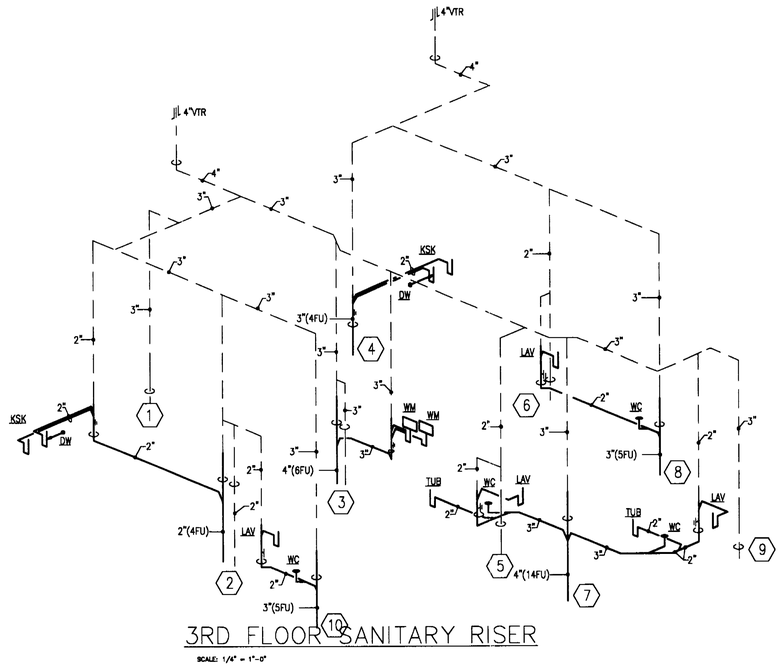

3RD FLOOR SANITARY RISER

SCALE: 1/4" = 1'-0"

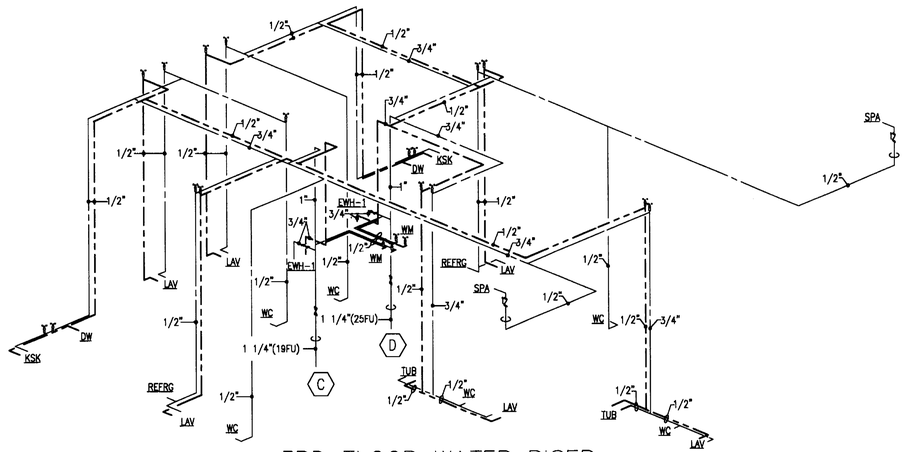

3RD FLOOR WATER RISER

SCALE: 1/4" = 1'-0"

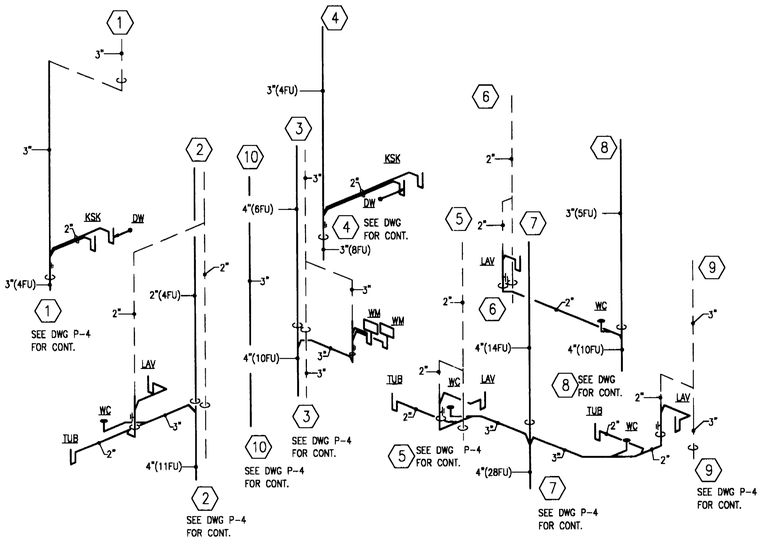

2ND FLOOR SANITARY RISER

SCALE: 1/4" = 1'-0"

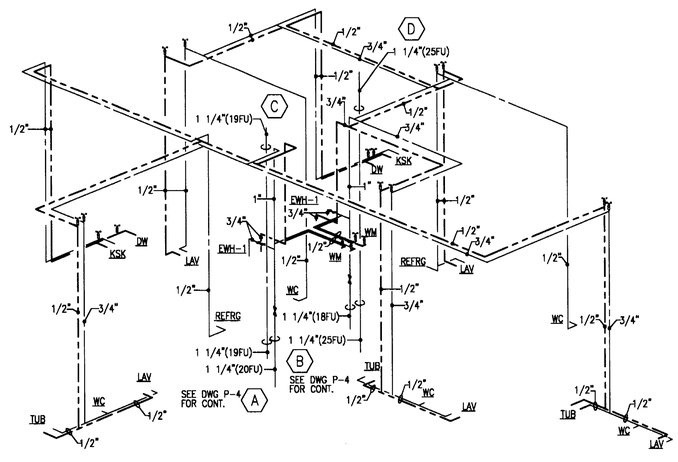

2ND FLOOR WATER RISER

SCALE: 1/4" = 1'-0"

DRAWN BY:

REVISIONS:

OWNER REV. 11-9-06

SEAL

3DESIGN INC
ANTHONY LEON
AR0006752
ARCHITECTURE
4300 BISCAYNE BLVD SUITE#204 MIAMI, FL 33137 T.305.438.9377 F.305.438.9378

NEW BLDG FOR
1529 JEFFERSON AVE
MIAMI BEACH, FL
33139

CITY OF MIAMI BEACH

VOID

Innovative Engineering Group Inc. CA#6717
5532 N.W. 72nd Ave
Miami, FL 33166
305-888-9626
Sudhir K. Gupta, P.E.
Fla. Reg. No. 29169

11/14/06

P-5

JUNE 9, 2006

VOID

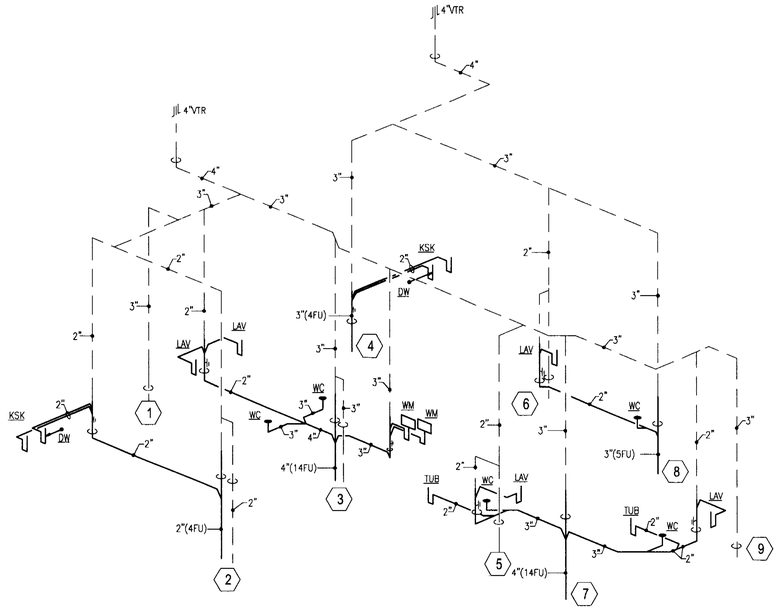

3RD FLOOR SANITARY RISER

SCALE: 1/4" = 1'-0"

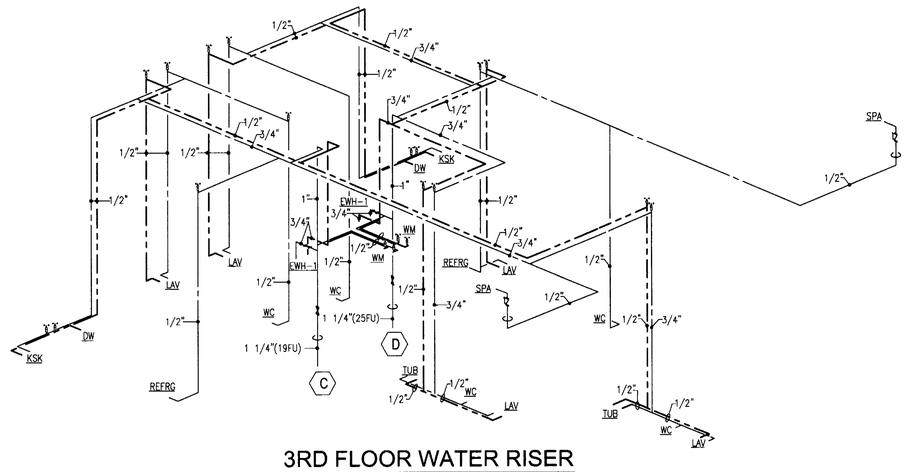

3RD FLOOR WATER RISER

SCALE: 1/4" = 1'-0"

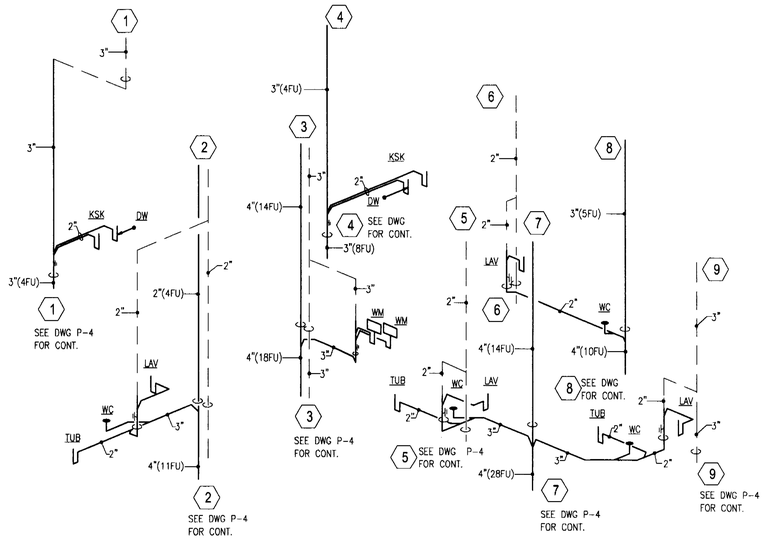

2ND FLOOR SANITARY RISER

SCALE: 1/4" = 1'-0"

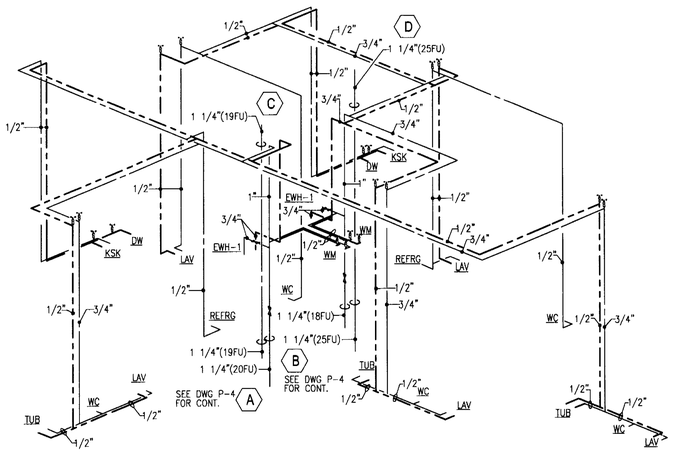

2ND FLOOR WATER RISER

SCALE: 1/4" = 1'-0"

DRAWN BY:

REVISIONS:

SEAL

3DESIGN INC
ANTHONY LEON
ARCHITECTURE
AR0006152
4300 BISCAYNE BLVD. SUITE#604 MIAMI, FL 33137 T.305.438.9577 F.305.438.9578

NEW BLGD
FOR
1529 JEFFERSON AVE
MIAMI BEACH, FL
33139

OFFICE COPY
CITY OF MIAMI BEACH
APPROVED FOR PERMIT BY
THE FOLLOWING:

BUILDING:
ZONING:
DRB/HPB:
CONCURRENCY:
PLUMBING:
ELECTRICAL:
MECHANICAL:
FIRE PREVENTION:
ENGINEERING:
PUBLIC WORKS:
STRUCTURAL:
ACCESSIBILITY:
OTHER:

CITY OF MIAMI BEACH
FOR

Innovative Engineering Group Inc. CA#8717
5532 N.W. 72nd Ave
Miami, FL 33166
305-868-9626
Sudhir K. Gupta, P.E.
Fla. Reg. No. 29189

6/16/06

P-5

JUNE 6, 2006

SITE PLAN
SCALE: 1/8" = 1'-0"

DRAWN BY:

REVISIONS:

3D DESIGN INC
ANTHONY LEON
AR0026752
ARCHITECTURE
4300 BISCAYNE BLVD SUITE#604 MIAMI, FL 33137 T 305.438.9377 F 305.458.9578

SEAL

NEW BLDG
1529 JEFFERSON AVE
MIAMI BEACH, FL
33139

FP-0

JUNE 6, 2006

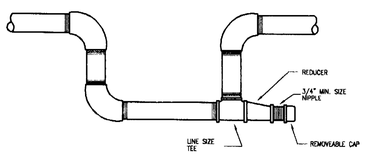

TRAPPED WATER VOLUME >5 GAL. < 50 GAL.: 3/4" MIN DRAIN VALVE REQ'D.
TRAPPED WATER VOLUME >50 GAL.: 1" MIN. DRAIN VALVE PIPED TO AN ACCESSIBLE LOCATION REQ'D.

AUXILIARY DRAIN DETAIL

N.T.S.

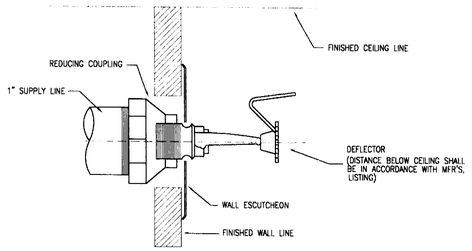

SIDEWALL SPRINKLER HEAD MOUNTING DETAIL

N.T.S.

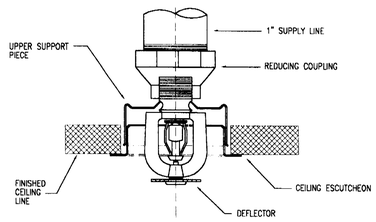

RECESSED PENDENT TYPE SPRINKLER HEAD MOUNTING DETAIL

N.T.S.

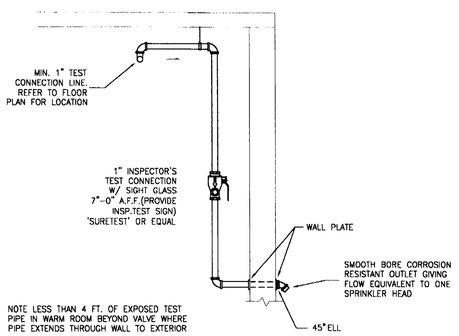

WET PIPE SYSTEM TEST CONNECTION DETAIL

N.T.S.

FIRE PROTECTION LEGEND

SYMBOL	ABBREV.	DESCRIPTION
— F —		FIRE MAIN
		PENDENT SPRINKLER HEAD
		UPRIGHT SPRINKLER HEAD
		SIDEWALL SPRINKLER HEAD
	BFV	INDICATING TYPE BUTTERFLY VALVE
	OS&Y	OUTSIDE SCREW AND YOKE GATE VALVE
	CH.V.	CHECK VALVE
	F.E.	FIRE EXTINGUISHER
	F.H.	FIRE HYDRANT
	F.H.C.	FIRE HOSE CABINET
	F.H.R.	FIRE HOSE RACK
	F.S.	FIRE SIAMESE
	F.STP.	FIRE STANDPIPE
	FL.SW.	FLOW SWITCH
	P.I.V.	POST INDICATOR VALVE
	R.M.V.	ROOF MANIFOLD VALVE
	T.SW.	TAMPER SWITCH
		HYDRAULIC REFERENCE POINT

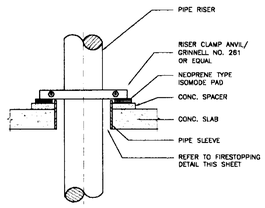

TYPICAL VERTICAL PIPE SUPPORT DETAIL

N.T.S.

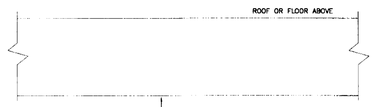

UPRIGHT TYPE SPRINKLER HEAD MOUNTING DETAIL

N.T.S.

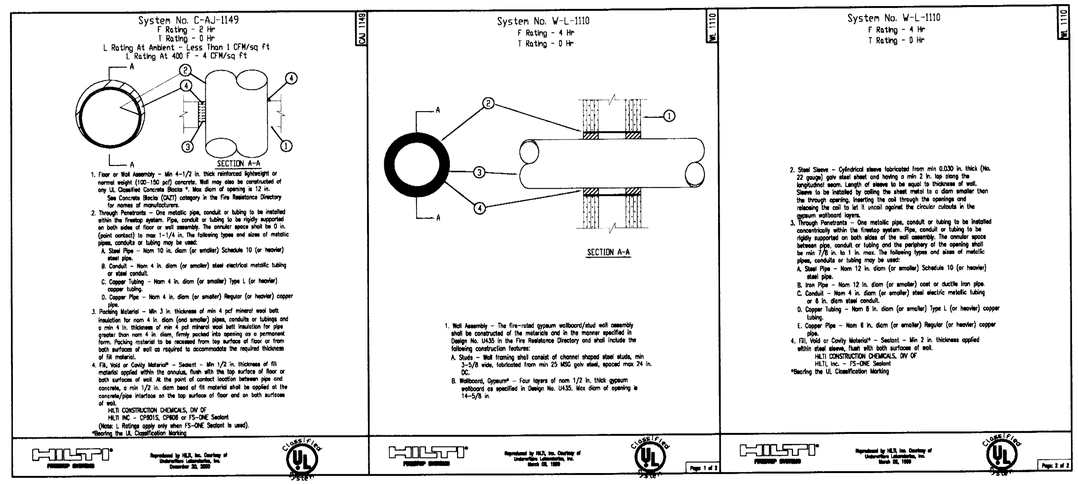

SPRINKLER HEAD SCHEDULE

AREA SERVED	MFR. & MODEL NO.	ORIFICE SIZE	CONFIGURATION	TEMP. RATING	REMARKS	DESIGN INFO.
TOWNHOMES	CENTRAL LFII SERIES RESIDENTIAL TY2234	7/16" K= 4.9	RECESSED PENDENT	ORDINARY	WHITE FINISH SPRINKLER & ESCUTCHEON	20 X 20 FT. 20 GPM 16.7 PSI
TOWNHOMES	CENTRAL LFII SERIES RESIDENTIAL TY1334	7/16" K= 4.2	SIDEWALL	ORDINARY	WHITE FINISH SPRINKLER & ESCUTCHEON	16 X 16 FT. 16 GPM 14.5 PSI
TOWNHOMES (AREAS WITH EXPOSED STRUCT.)	CENTRAL LFII SERIES RESIDENTIAL TY2234	7/16" K= 4.9	PENDENT	ORDINARY	WHITE FINISH SPRINKLER	20 X 20 FT. 20 GPM 16.7 PSI
DOMESTIC & FIRE PUMP ROOM	CENTRAL TY-FRB	1/2" K= 5.6	UPRIGHT	ORDINARY	WHITE FINISH SPRINKLER	---

NOTES:
1. ALL SPRINKLERS U.L. LISTED QUICK RESPONSE RESIDENTIAL SPRINKLER.
2. WHITE SPRINKLER FINISH TO BE U.L. LISTED CORROSION RESISTANT.

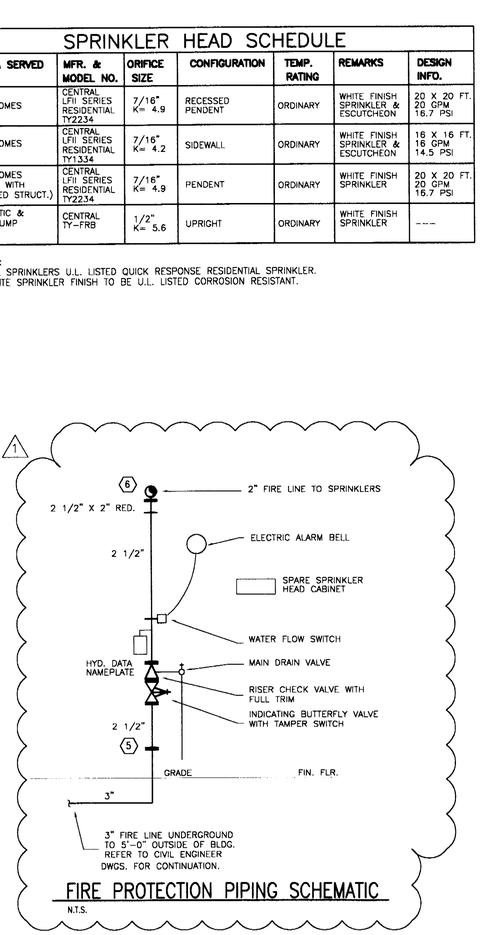

FIRE PROTECTION PIPING SCHEMATIC

N.T.S.

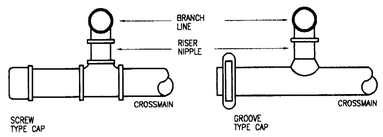

NOTE:
ALL CROSSMAINS SHALL TERMINATE IN MIN. 1 1/4" PIPE ALL BRANCH LINES ON GRIDDED SYSTEMS SHALL BE ARRANGED TO FACILITATE FLUSHING OF THE SYSTEM.

TYPICAL FLUSHING CONNECTION

N.T.S.

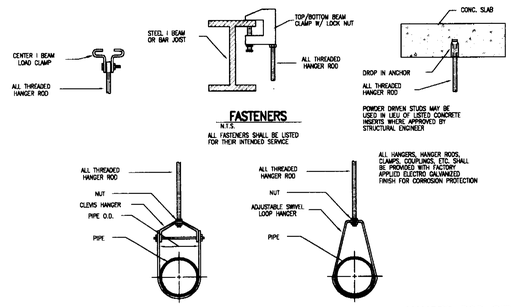

FASTENERS

N.T.S.

ALL FASTENERS SHALL BE LISTED FOR THEIR INTENDED SERVICE

PIPE HANGERS

N.T.S.

ALL HANGERS SHALL BE LISTED FOR THEIR INTENDED SERVICE

HANGER ROD SIZES

UP TO 4" PIPE	3/8" DIA.
5" TO 8" PIPE	1/2" DIA.
10 & 12" PIPE	5/8" DIA.

MAXIMUM HANGER SPACING (FT.)

PIPE SIZE (IN.)	3/4	1	1 1/4	1 1/2	2	2 1/2	3	4	6	8
THREADED LIGHTWALL STEEL PIPE	N/A	12	12	12	12	12	12	N/A	N/A	N/A
STEEL PIPE EXCEPT THREADED LIGHTWALL	N/A	12	12	15	15	15	15	15	15	15
CPVC	5'-6"	6	6'-6"	7	8	9	10	N/A	N/A	N/A

NOTES:
1. MAXIMUM DISTANCE BETWEEN END SPRINKLER AND LAST HANGER ON BRANCH LINES SHALL NOT EXCEED 36" FOR 1" PIPE, 48" FOR 1 1/4" PIPE AND 60" FOR 1 1/2" OR LARGER PIPE SIZE. EXTEND BRANCH LINE AND PROVIDE ADDITIONAL HANGER WHERE REQUIRED.
2. MAXIMUM HORIZONTAL LENGTH OF AN UNSUPPORTED ARMOVER TO A SPRINKLER, SPRINKLER DROP OR SPRIG-UP SHALL NOT EXCEED 24".
3. MINIMUM DISTANCE BETWEEN A HANGER AND CENTERLINE OF AN UPRIGHT SPRINKLER TO BE 3".
4. WALL MOUNTED SIDEWALL SPRINKLERS SHALL BE RESTRAINED TO PREVENT MOVEMENT.
5. HANGERS FOR MAINS SHALL BE IN ACCORDANCE WITH SPACING TABLE ABOVE OR BETWEEN EACH BRANCHLINE, WHICHEVER IS THE LESSER DIMENSION.

FIRE PROTECTION NOTES & DETAILS

SCALE: N.T.S.

Innovative Engineering Group Inc. CA#6717
5532 N.W. 72nd Ave
Miami, FL 33166
305-888-9626
Sudhir K. Gupta, P.E.
Fla. Reg. No. 29169

DRAWN BY:

REVISIONS:
1 OWNER REVISION 11/06/06

3D DESIGN INC
ANTHONY LEON
AR0006752
ARCHITECTURE
4500 BISCAYNE BLVD SUITE#604 MIAMI, FL 33137 T.305.438.9377 F.305.438.9378

SEAL

NEW BLDG FOR
1529 JEFFERSON AVE
MIAMI BEACH, FL
33139

ATTACH
PERMIT BY
ING:

JUN 12 2006

FIRE PREVENTION
ENGINEERING:
PUBLIC WORKS:
STRUCTURAL:
ACCESSIBILITY:

F1

JUNE 9, 2006

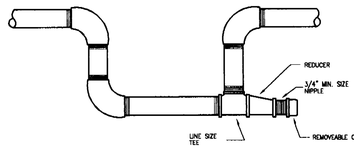

TRAPPED WATER VOLUME >5 GAL. < 50 GAL.: 3/4" MIN DRAIN VALVE REQ'D.
TRAPPED WATER VOLUME >50 GAL.: 1" MIN. DRAIN VALVE PIPED TO AN ACCESSIBLE LOCATION REQ'D.

AUXILIARY DRAIN DETAIL
N.T.S.

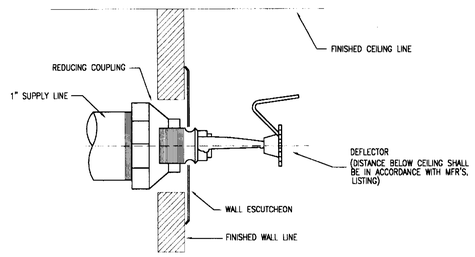

SIDEWALL SPRINKLER HEAD MOUNTING DETAIL
N.T.S.

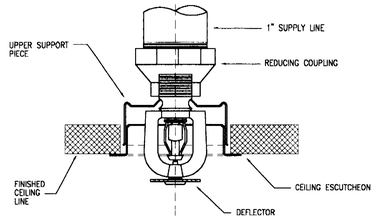

RECESSED PENDENT TYPE SPRINKLER HEAD MOUNTING DETAIL
N.T.S.

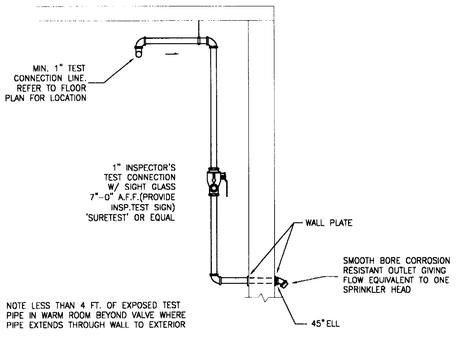

WET PIPE SYSTEM TEST CONNECTION DETAIL
N.T.S.

FIRE PROTECTION LEGEND

SYMBOL	ABBREV.	DESCRIPTION
— F —		FIRE MAIN
		PENDENT SPRINKLER HEAD
		UPRIGHT SPRINKLER HEAD
		SIDEWALL SPRINKLER HEAD
	BFV	INDICATING TYPE BUTTERFLY VALVE
	OS&Y	OUTSIDE SCREW AND YOKE GATE VALVE
	CH.V.	CHECK VALVE
	F.E.	FIRE EXTINGUISHER
	F.H.	FIRE HYDRANT
	F.H.C.	FIRE HOSE CABINET
	F.H.R.	FIRE HOSE RACK
	F.S.	FIRE SIAMESE
	F.STP.	FIRE STANDPIPE
FS	FL.SW.	FLOW SWITCH
	P.I.V.	POST INDICATOR VALVE
	R.M.V.	ROOF MANIFOLD VALVE
	T.SW.	TAMPER SWITCH
		HYDRAULIC REFERENCE POINT

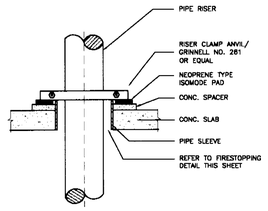

TYPICAL VERTICAL PIPE SUPPORT DETAIL
N.T.S.

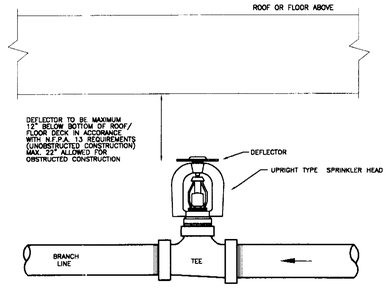

UPRIGHT TYPE SPRINKLER HEAD MOUNTING DETAIL
N.T.S.

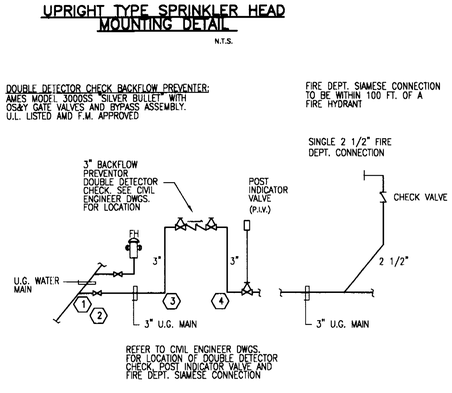

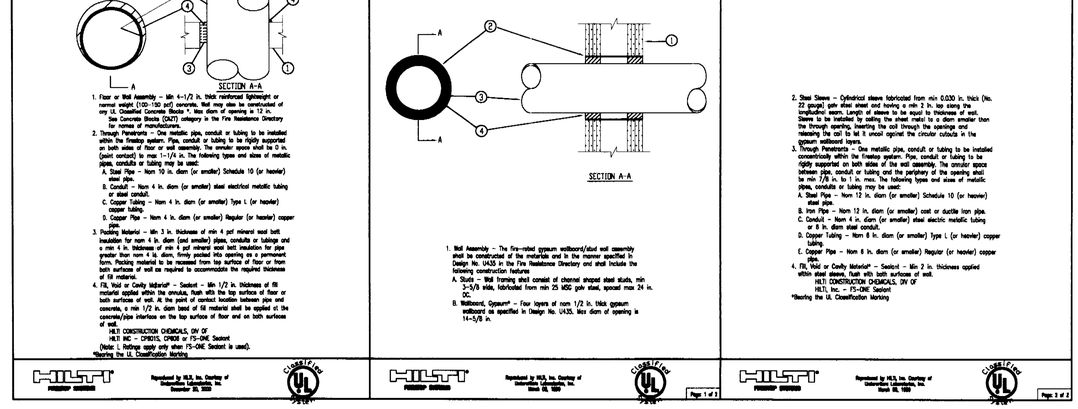

SPRINKLER HEAD SCHEDULE

AREA SERVED	MFR. & MODEL NO.	ORIFICE SIZE	CONFIGURATION	TEMP. RATING	REMARKS	DESIGN INFO.
TOWNHOMES	CENTRAL LFII SERIES RESIDENTIAL TY2234	7/16" K= 4.9	RECESSED PENDENT	ORDINARY	WHITE FINISH SPRINKLER & ESCUTCHEON	20 X 20 FT. 20 GPM 16.7 PSI
TOWNHOMES	CENTRAL LFII SERIES RESIDENTIAL TY1334	7/16" K= 4.2	SIDEWALL	ORDINARY	WHITE FINISH SPRINKLER & ESCUTCHEON	16 X 16 FT. 16 GPM 14.5 PSI
TOWNHOMES (AREAS WITH EXPOSED STRUCT.)	CENTRAL LFII SERIES RESIDENTIAL TY2234	7/16" K= 4.9	PENDENT	ORDINARY	WHITE FINISH SPRINKLER	20 X 20 FT. 20 GPM 16.7 PSI
DOMESTIC & FIRE PUMP ROOM	CENTRAL TY-FRB	1/2" K= 5.6	UPRIGHT	ORDINARY	WHITE FINISH SPRINKLER	---

NOTES:
1. ALL SPRINKLERS U.L. LISTED QUICK RESPONSE RESIDENTIAL SPRINKLER.
2. WHITE SPRINKLER FINISH TO BE U.L. LISTED CORROSION RESISTANT.

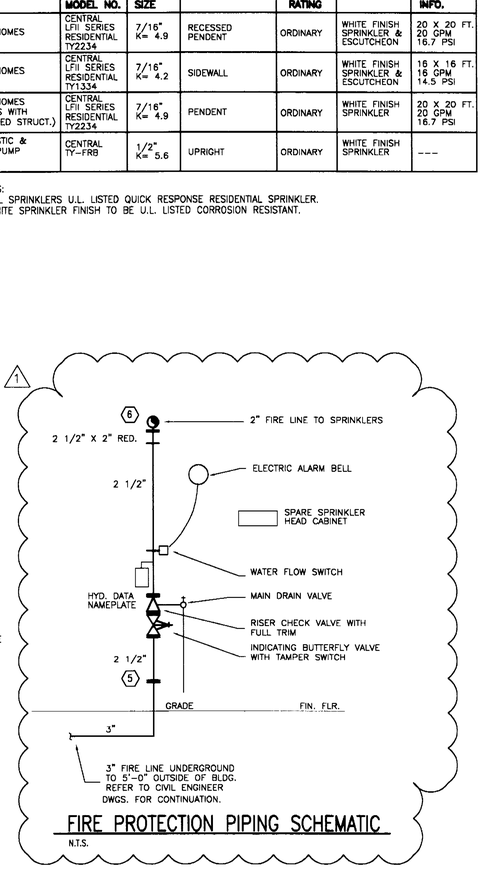

FIRE PROTECTION PIPING SCHEMATIC
N.T.S.

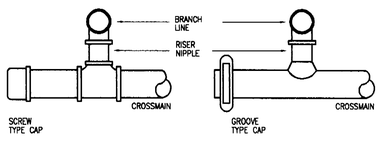

NOTE:
ALL CROSSMAINS SHALL TERMINATE IN MIN. 1 1/4" PIPE.ALL BRANCH LINES ON GRIDDED SYSTEMS SHALL BE ARRANGED TO FACILITATE FLUSHING OF THE SYSTEM.

TYPICAL FLUSHING CONNECTION
N.T.S.

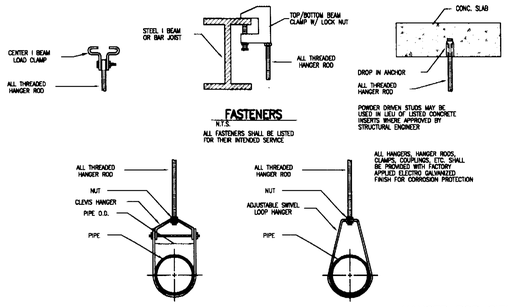

FASTENERS
N.T.S.
ALL FASTENERS SHALL BE LISTED FOR THEIR INTENDED SERVICE

PIPE HANGERS
N.T.S.
ALL HANGERS SHALL BE LISTED FOR THEIR INTENDED SERVICE

HANGER ROD SIZES

UP TO 4" PIPE	3/8" DIA.
5" TO 8" PIPE	1/2" DIA.
10 & 12" PIPE	5/8" DIA.

MAXIMUM HANGER SPACING (FT.)

PIPE SIZE (IN.)	3/4	1	1 1/4	1 1/2	2	2 1/2	3	4	6	8
THREADED LIGHTWALL STEEL PIPE	N/A	12	12	12	12	12	12	N/A	N/A	N/A
STEEL PIPE EXCEPT THREADED LIGHTWALL	N/A	12	12	15	15	15	15	15	15	15
CPVC	5'-6"	6	6'-6"	7	8	9	10	N/A	N/A	N/A

NOTES:
1. MAXIMUM DISTANCE BETWEEN END SPRINKLER AND LAST HANGER ON BRANCH LINES SHALL NOT EXCEED 36" FOR 1" PIPE, 48" FOR 1 1/4" PIPE AND 60" FOR 1 1/2" OR LARGER PIPE SIZE. EXTEND BRANCH LINE AND PROVIDE ADDITIONAL HANGER WHERE REQUIRED.
2. MAXIMUM HORIZONTAL LENGTH OF AN UNSUPPORTED ARMOVER TO A SPRINKLER, SPRINKLER DROP OR SPRIG-UP SHALL NOT EXCEED 24".
3. MINIMUM DISTANCE BETWEEN A HANGER AND CENTERLINE OF AN UPRIGHT SPRINKLER TO BE 3".
4. WALL MOUNTED SIDEWALL SPRINKLERS SHALL BE RESTRAINED TO PREVENT MOVEMENT.
5. HANGERS FOR MAINS SHALL BE IN ACCORDANCE WITH SPACING TABLE ABOVE OR BETWEEN EACH BRANCHLINE, WHICHEVER IS THE LESSER DIMENSION.

FIRE PROTECTION NOTES & DETAILS
SCALE: N.T.S.

Innovative Engineering Group Inc. CA#6717
5632 N.W. 72nd Ave
Miami, FL 33166
305-888-9626
Sudhir K. Gupta, P.E.
Fla. Reg. No. 29189

DRAWN BY:

REVISIONS:
1 OWNER REVISION 11/06/06

2DESIGN INC
ANTHONY LEON
AR0016752
ARCHITECTURE
4300 BISCAYNE BLVD. SUITE#604 MIAMI, FL 33137 T.305.438.9277 F.305.438.9278

SEAL

NEW BLDG FOR
1529 JEFFERSON AVE
MIAMI BEACH, FL
33139

CITY OF MIAMI BEACH
11/14/06

F1

JUNE 9, 2006

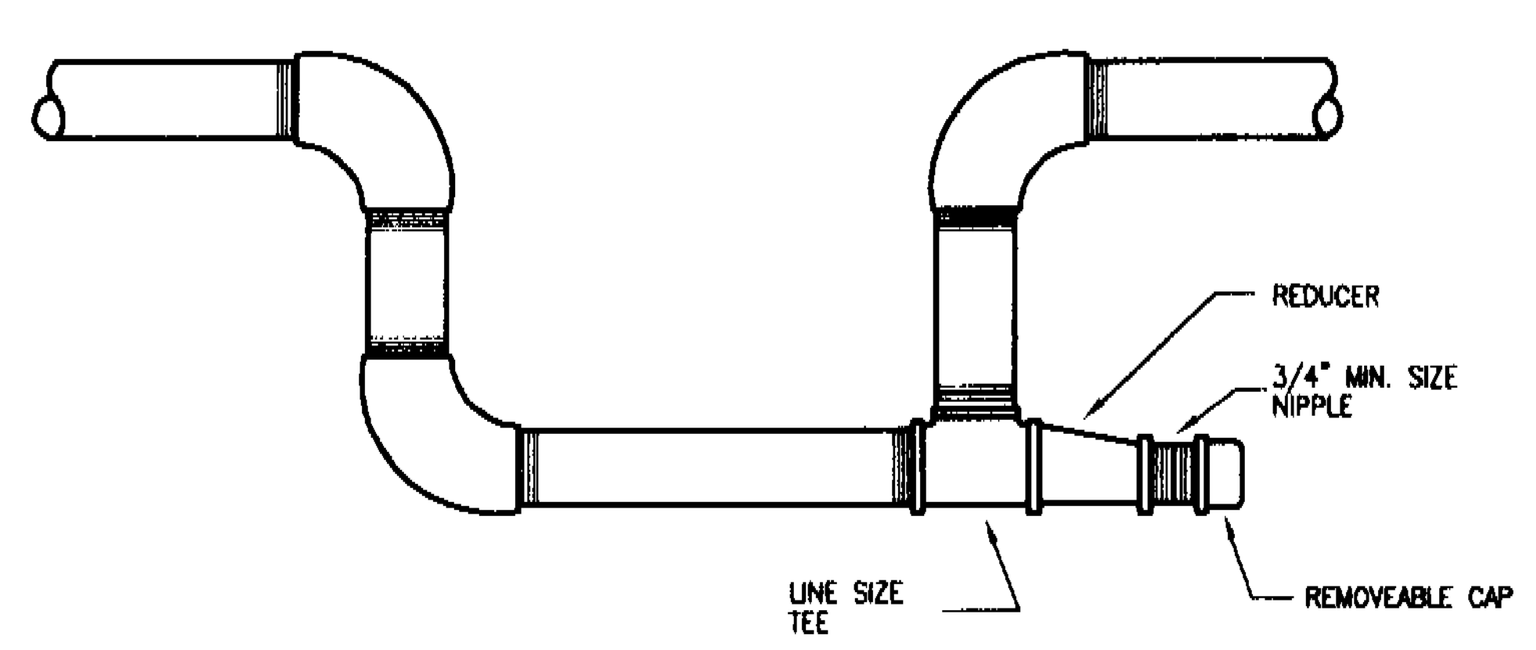

TRAPPED WATER VOLUME >5 GAL. < 50 GAL.: 3/4" MIN DRAIN VALVE REQ'D.
TRAPPED WATER VOLUME >50 GAL.: 1" MIN. DRAIN VALVE PIPED TO AN ACCESSIBLE LOCATION REQ'D.

AUXILIARY DRAIN DETAIL
N.T.S.

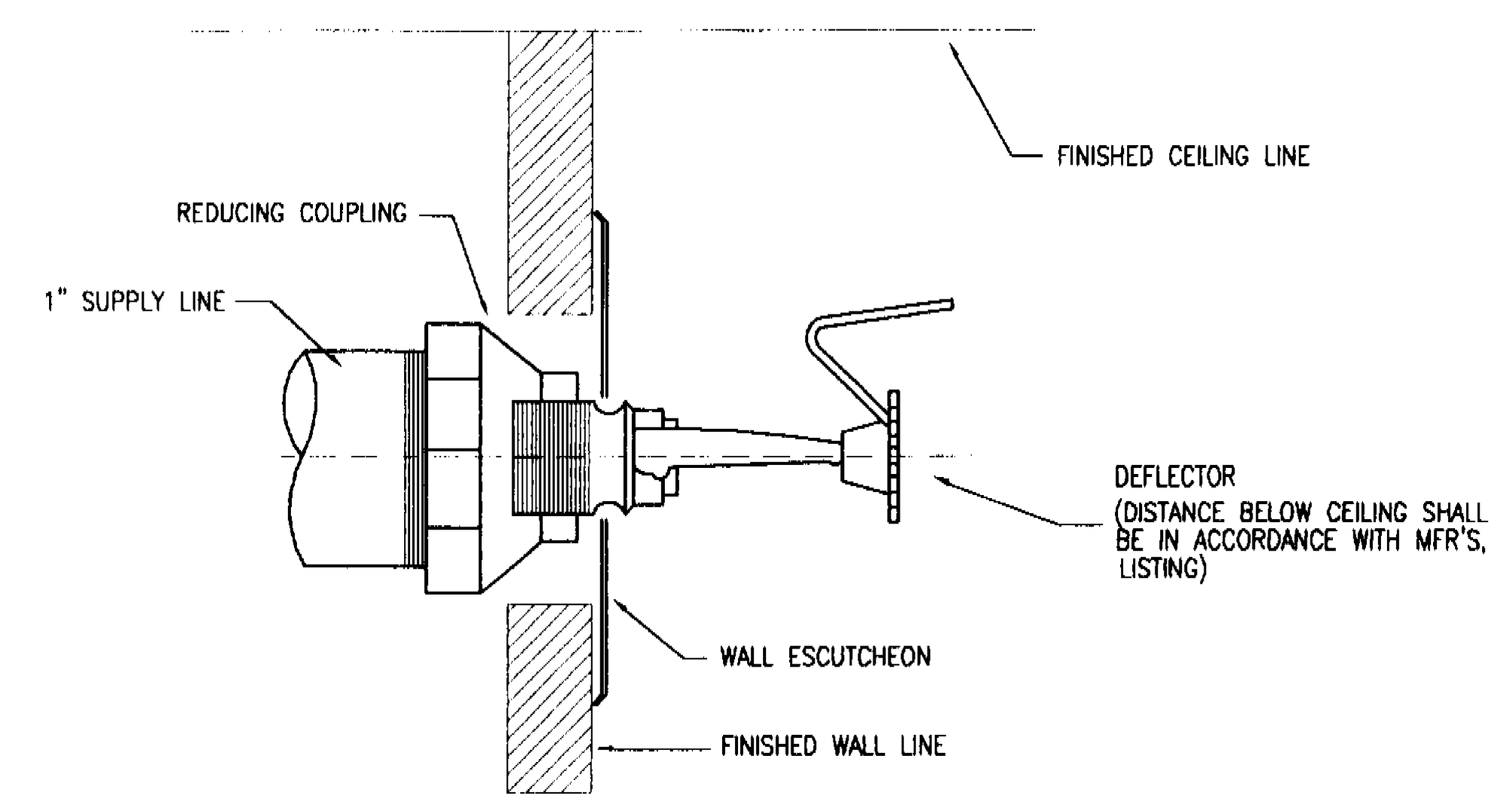

SIDEWALL SPRINKLER HEAD MOUNTING DETAIL
N.T.S.

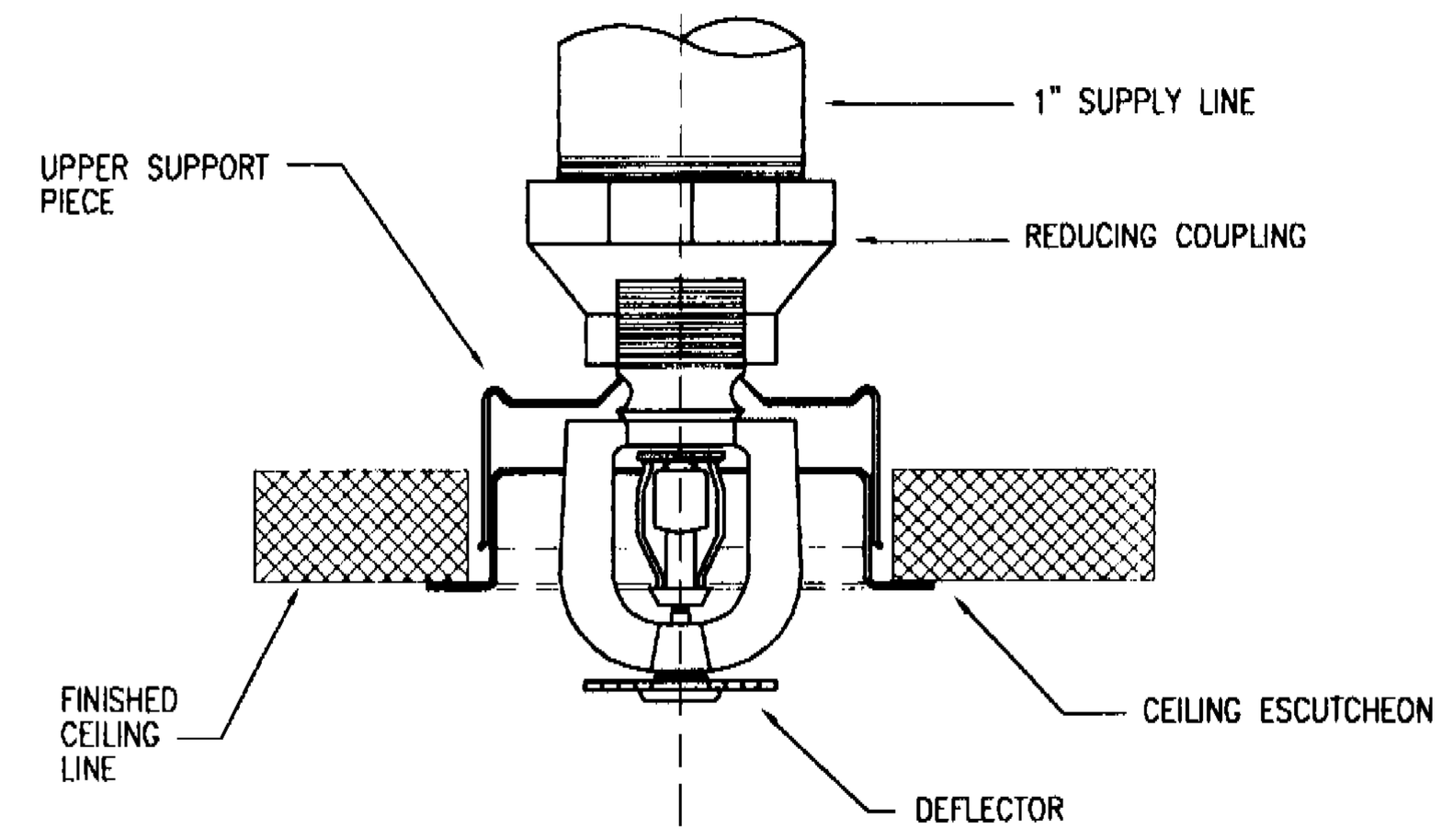

RECESSED PENDENT TYPE SPRINKLER HEAD MOUNTING DETAIL
N.T.S.

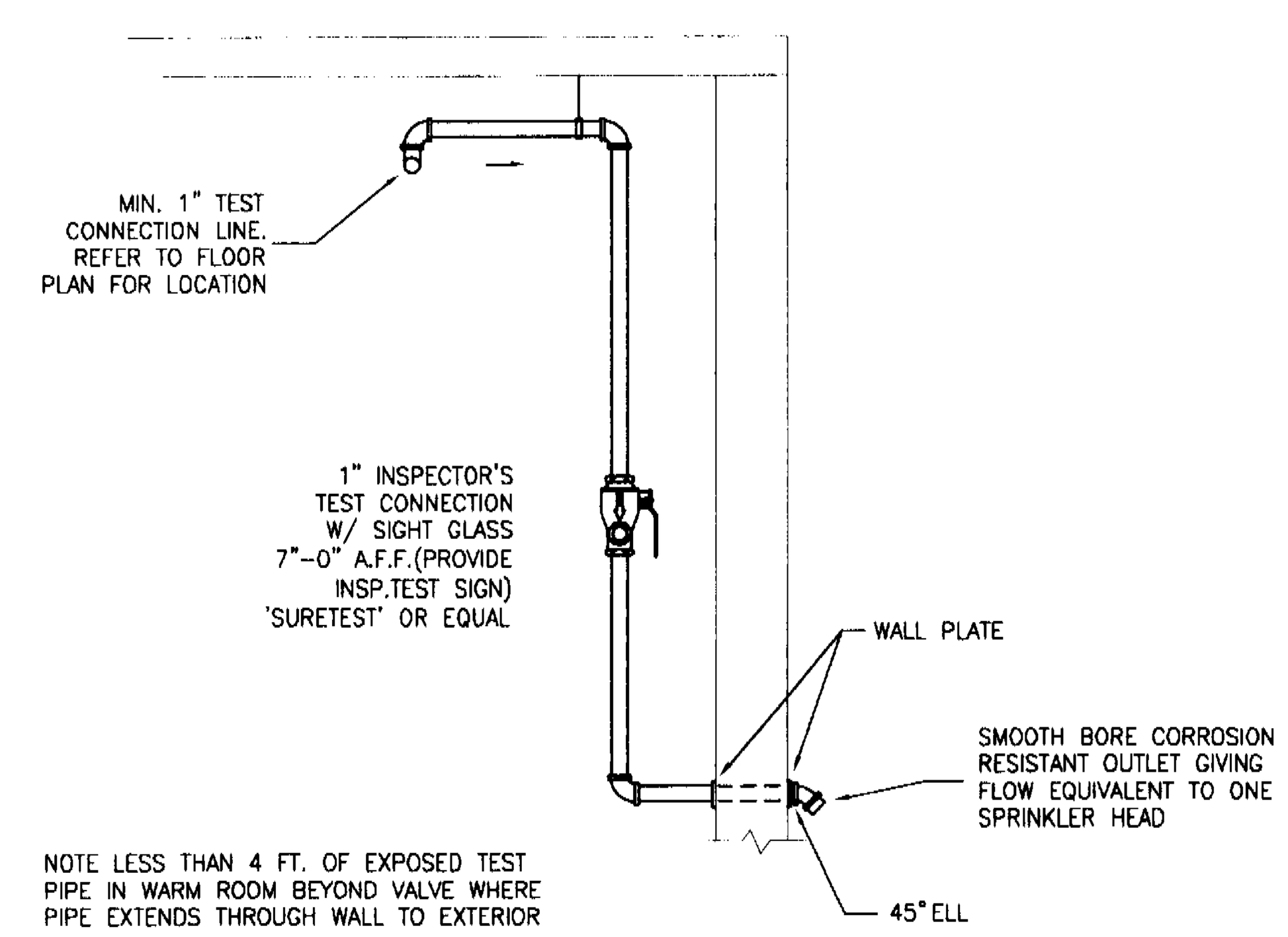

NOTE LESS THAN 4 FT. OF EXPOSED TEST PIPE IN WARM ROOM BEYOND VALVE WHERE PIPE EXTENDS THROUGH WALL TO EXTERIOR

WET PIPE SYSTEM TEST CONNECTION DETAIL
N.T.S.

FIRE PROTECTION LEGEND

SYMBOL	ABBREV.	DESCRIPTION
— F —		FIRE MAIN
		PENDENT SPRINKLER HEAD
		UPRIGHT SPRINKLER HEAD
		SIDEWALL SPRINKLER HEAD
	BFV	INDICATING TYPE BUTTERFLY VALVE
	OS&Y	OUTSIDE SCREW AND YOKE GATE VALVE
	CH.V.	CHECK VALVE
	F.E.	FIRE EXTINGUISHER
	F.H.	FIRE HYDRANT
	F.H.C.	FIRE HOSE CABINET
	F.H.R.	FIRE HOSE RACK
	F.S.	FIRE SIAMESE
	F.STP.	FIRE STANDPIPE
FS	FL.SW.	FLOW SWITCH
	P.I.V.	POST INDICATOR VALVE
	R.M.V.	ROOF MANIFOLD VALVE
	T.SW.	TAMPER SWITCH
		HYDRAULIC REFERENCE POINT

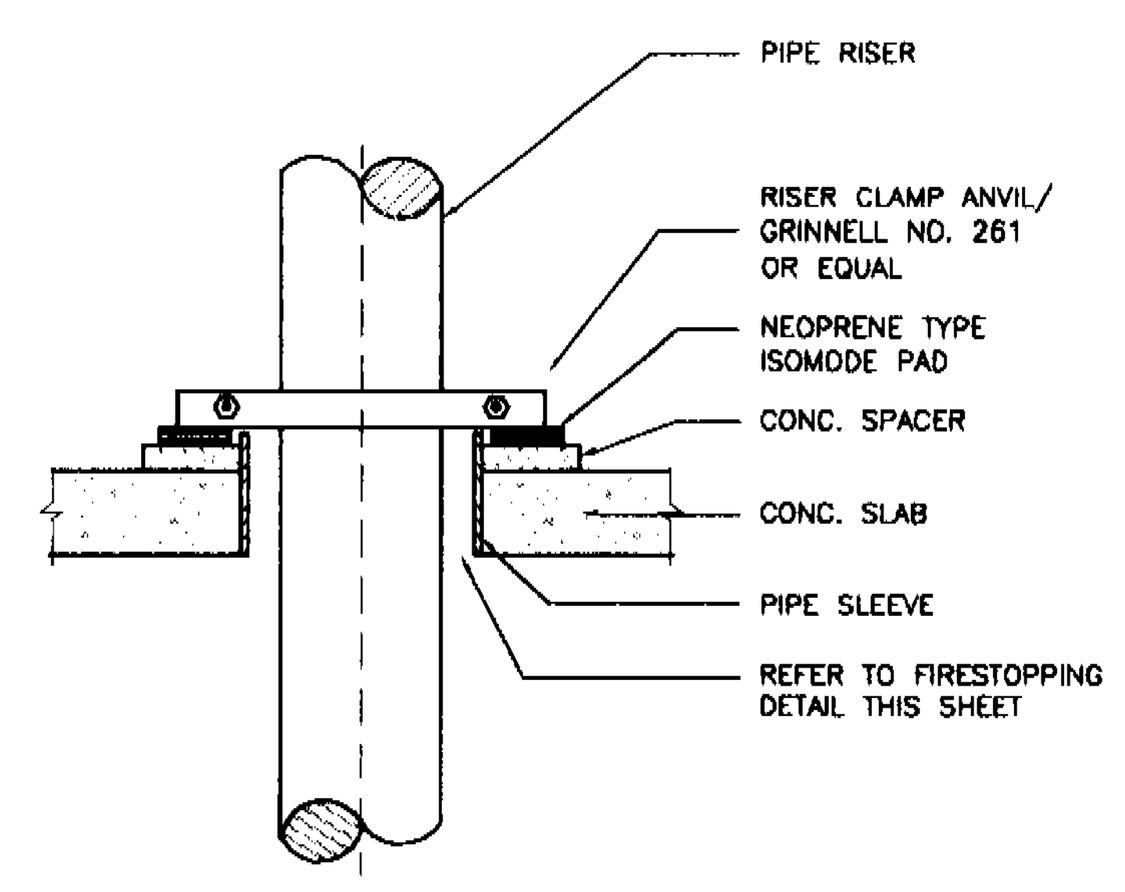

TYPICAL VERTICAL PIPE SUPPORT DETAIL
N.T.S.

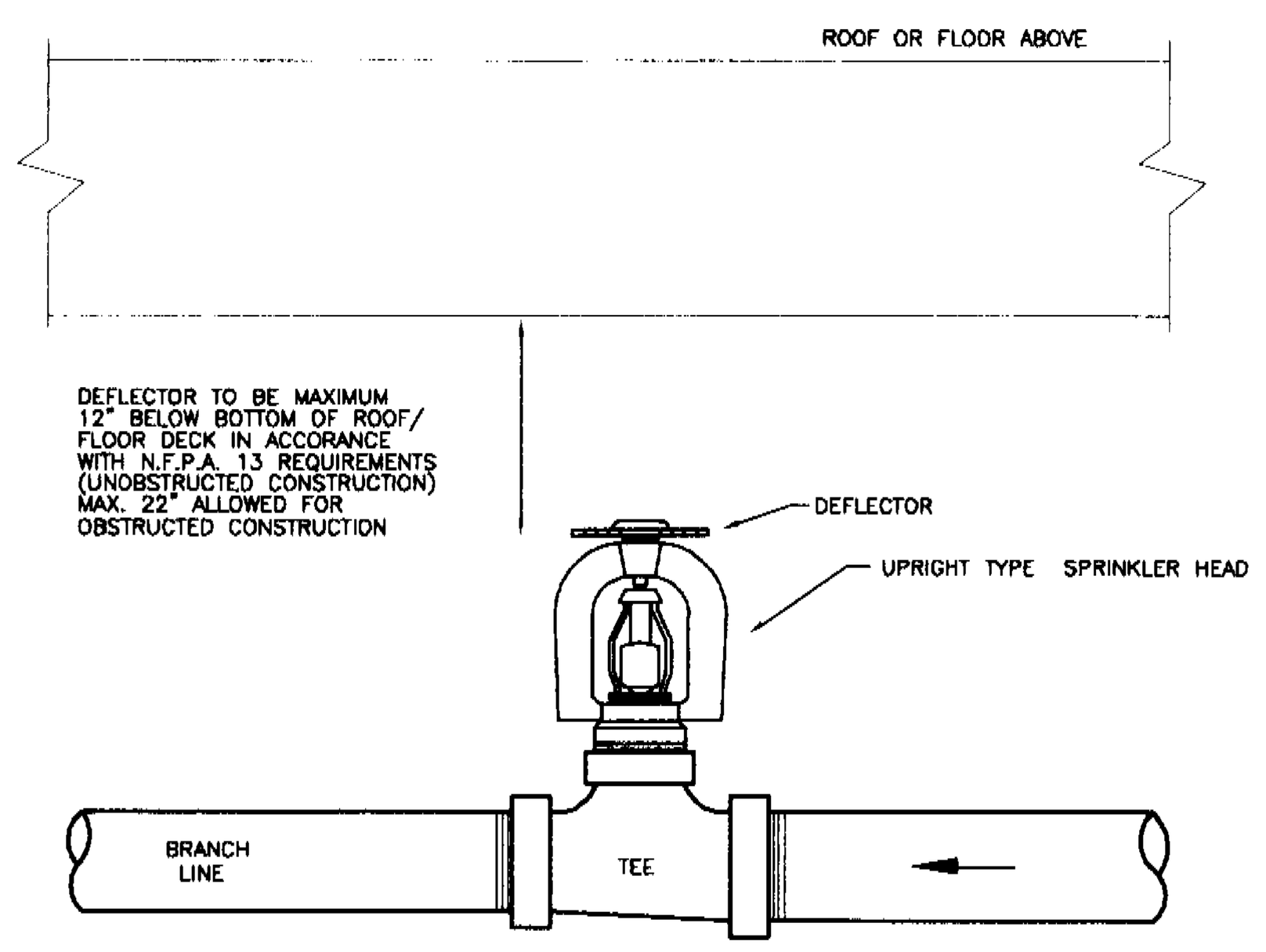

UPRIGHT TYPE SPRINKLER HEAD MOUNTING DETAIL
N.T.S.

DOUBLE DETECTOR CHECK BACKFLOW PREVENTER:
AMES MODEL 3000SS "SILVER BULLET" WITH OS&Y GATE VALVES AND BYPASS ASSEMBLY. U.L. LISTED AMD F.M. APPROVED

FIRE DEPT. SIAMESE CONNECTION TO BE WITHIN 100 FT. OF A FIRE HYDRANT

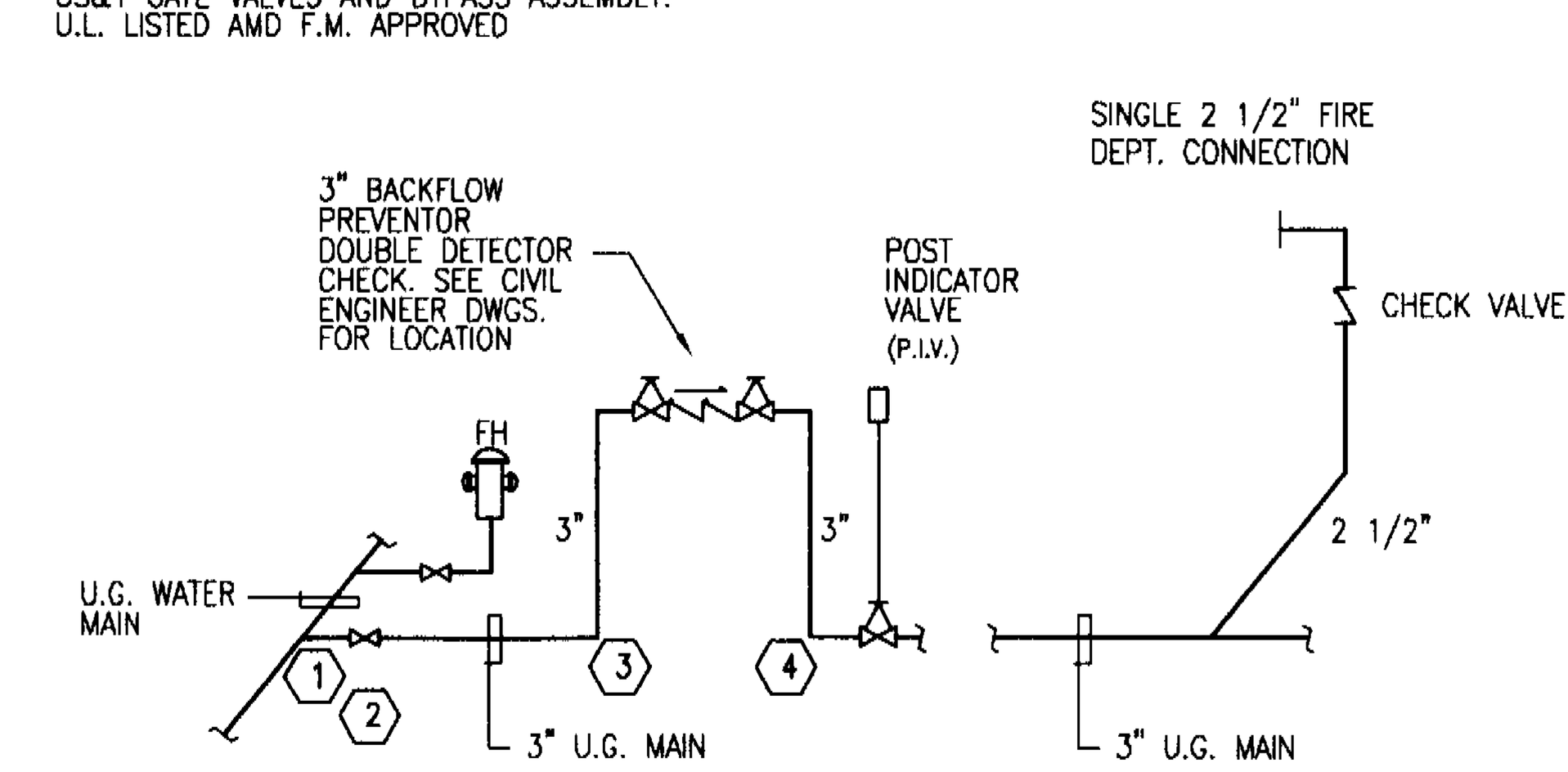

REFER TO CIVIL ENGINEER DWGS. FOR LOCATION OF DOUBLE DETECTOR CHECK, POST INDICATOR VALVE AND FIRE DEPT. SIAMESE CONNECTION

System No. C-AJ-1149
F Rating - 2 Hr
T Rating - 0 Hr
L Rating At Ambient - Less Than 1 CFM/sq ft
L Rating At 400 F - 4 CFM/sq ft

CAJ 1149

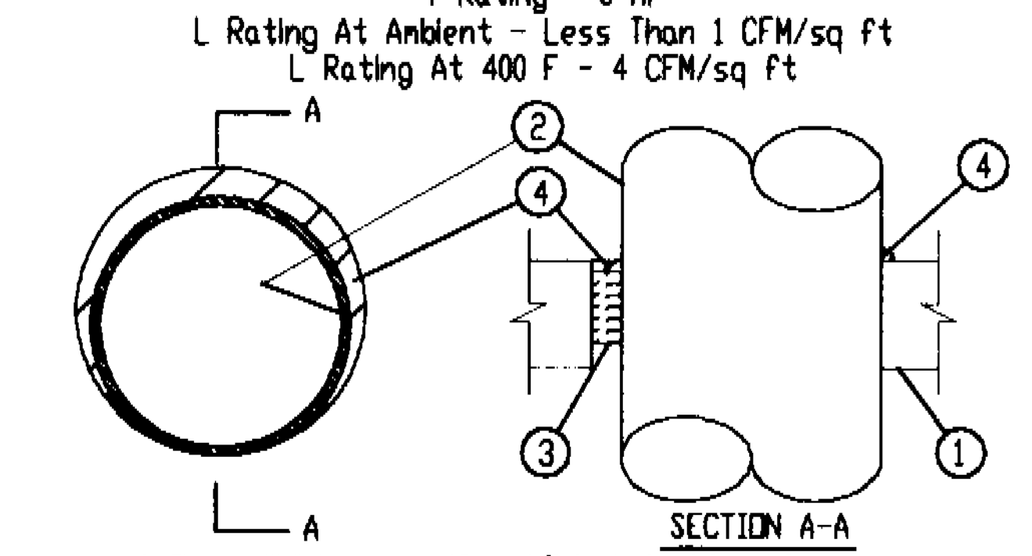

1. Floor or Wall Assembly – Min 4-1/2 in. thick reinforced lightweight or normal weight (100-150 pcf) concrete. Wall may also be constructed of any UL Classified Concrete Blocks *. Max diam of opening is 12 in. See Concrete Blocks (CAZT) category in the Fire Resistance Directory for names of manufacturers.
2. Through Penetrants – One metallic pipe, conduit or tubing to be installed within the firestop system. Pipe, conduit or tubing to be rigidly supported on both sides of floor or wall assembly. The annular space shall be 0 in. (point contact) to max 1-1/4 in. The following types and sizes of metallic pipes, conduits or tubing may be used:
   A. Steel Pipe – Nom 10 in. diam (or smaller) Schedule 10 (or heavier) steel pipe.
   B. Conduit – Nom 4 in. diam (or smaller) steel electrical metallic tubing or steel conduit.
   C. Copper Tubing – Nom 4 in. diam (or smaller) Type L (or heavier) copper tubing.
   D. Copper Pipe – Nom 4 in. diam (or smaller) Regular (or heavier) copper pipe.
3. Packing Material – Min 3 in. thickness of min 4 pcf mineral wool batt insulation for nom 4 in. diam (and smaller) pipes, conduits or tubings and a min 4 in. thickness of min 4 pcf mineral wool batt insulation for pipe greater than nom 4 in. diam, firmly packed into opening as a permanent form. Packing material to be recessed from top surface of floor or from both surfaces of wall as required to accommodate the required thickness of fill material.
4. Fill, Void or Cavity Material* – Sealant – Min 1/2 in. thickness of fill material applied within the annulus, flush with the top surface of floor or both surfaces of wall. At the point of contact location between pipe and concrete, a min 1/2 in. diam bead of fill material shall be applied at the concrete/pipe interface on the top surface of floor and on both surfaces of wall.
   HILTI CONSTRUCTION CHEMICALS, DIV OF
   HILTI INC – CP601S, CP606 or FS-ONE Sealant
   (Note: L Ratings apply only when FS-ONE Sealant is used).
*Bearing the UL Classification Marking

HILTI FIRESTOP SYSTEMS — Reproduced by HILTI, Inc. Courtesy of Underwriters Laboratories, Inc. December 20, 2000 — Classified UL System

System No. W-L-1110
F Rating - 4 Hr
T Rating - 0 Hr

WL 1110

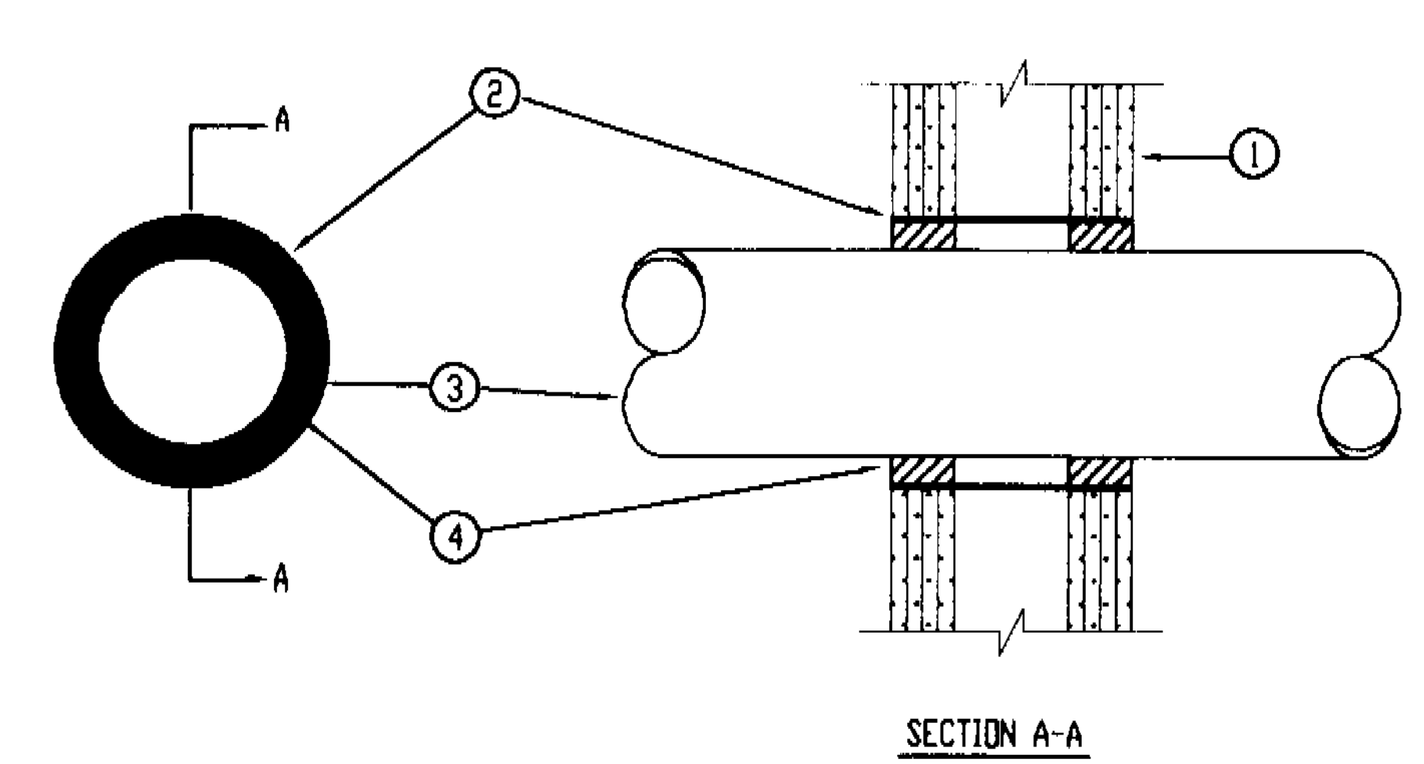

1. Wall Assembly – The fire-rated gypsum wallboard/stud wall assembly shall be constructed of the materials and in the manner specified in Design No. U435 in the Fire Resistance Directory and shall include the following construction features:
   A. Studs – Wall framing shall consist of channel shaped steel studs, min 3-5/8 wide, fabricated from min 25 MSG galv steel, spaced max 24 in. OC.
   B. Wallboard, Gypsum* – Four layers of nom 1/2 in. thick gypsum wallboard as specified in Design No. U435. Max diam of opening is 14-5/8 in.

HILTI FIRESTOP SYSTEMS — Reproduced by HILTI, Inc. Courtesy of Underwriters Laboratories, Inc. March 08, 1999 — Classified UL System — Page: 1 of 2

System No. W-L-1110
F Rating - 4 Hr
T Rating - 0 Hr

WL 1110

2. Steel Sleeve – Cylindrical sleeve fabricated from min 0.030 in. thick (No. 22 gauge) galv steel sheet and having a min 2 in. lap along the longitudinal seam. Length of sleeve to be equal to thickness of wall. Sleeve to be installed by coiling the sheet metal to a diam smaller than the through opening, inserting the coil through the openings and releasing the coil to let it uncoil against the circular cutouts in the gypsum wallboard layers.
3. Through Penetrants – One metallic pipe, conduit or tubing to be installed concentrically within the firestop system. Pipe, conduit or tubing to be rigidly supported on both sides of the wall assembly. The annular space between pipe, conduit or tubing and the periphery of the opening shall be min 7/8 in. to 1 in. max. The following types and sizes of metallic pipes, conduits or tubing may be used:
   A. Steel Pipe – Nom 12 in. diam (or smaller) Schedule 10 (or heavier) steel pipe.
   B. Iron Pipe – Nom 12 in. diam (or smaller) cast or ductile iron pipe.
   C. Conduit – Nom 4 in. diam (or smaller) steel electric metallic tubing or 6 in. diam steel conduit.
   D. Copper Tubing – Nom 6 in. diam (or smaller) Type L (or heavier) copper tubing.
   E. Copper Pipe – Nom 6 in. diam (or smaller) Regular (or heavier) copper pipe.
4. Fill, Void or Cavity Material* – Sealant – Min 2 in. thickness applied within steel sleeve, flush with both surfaces of wall.
   HILTI CONSTRUCTION CHEMICALS, DIV OF
   HILTI, Inc. – FS-ONE Sealant
*Bearing the UL Classification Marking

HILTI FIRESTOP SYSTEMS — Reproduced by HILTI, Inc. Courtesy of Underwriters Laboratories, Inc. March 08, 1999 — Classified UL System — Page: 2 of 2

SPRINKLER HEAD SCHEDULE

AREA SERVED	MFR. & MODEL NO.	ORIFICE SIZE	CONFIGURATION	TEMP. RATING	REMARKS	DESIGN INFO.
TOWNHOMES	CENTRAL LFII SERIES RESIDENTIAL TY2234	7/16" K= 4.9	RECESSED PENDENT	ORDINARY	WHITE FINISH SPRINKLER & ESCUTCHEON	20 X 20 FT. 20 GPM 16.7 PSI
TOWNHOMES	CENTRAL LFII SERIES RESIDENTIAL TY1334	7/16" K= 4.2	SIDEWALL	ORDINARY	WHITE FINISH SPRINKLER & ESCUTCHEON	16 X 16 FT. 16 GPM 14.5 PSI
TOWNHOMES (AREAS WITH EXPOSED STRUCT.)	CENTRAL LFII SERIES RESIDENTIAL TY2234	7/16" K= 4.9	PENDENT	ORDINARY	WHITE FINISH SPRINKLER	20 X 20 FT. 20 GPM 16.7 PSI
DOMESTIC & FIRE PUMP ROOM	CENTRAL TY–FRB	1/2" K= 5.6	UPRIGHT	ORDINARY	WHITE FINISH SPRINKLER	---

NOTES:
1. ALL SPRINKLERS U.L. LISTED QUICK RESPONSE RESIDENTIAL SPRINKLER.
2. WHITE SPRINKLER FINISH TO BE U.L. LISTED CORROSION RESISTANT.

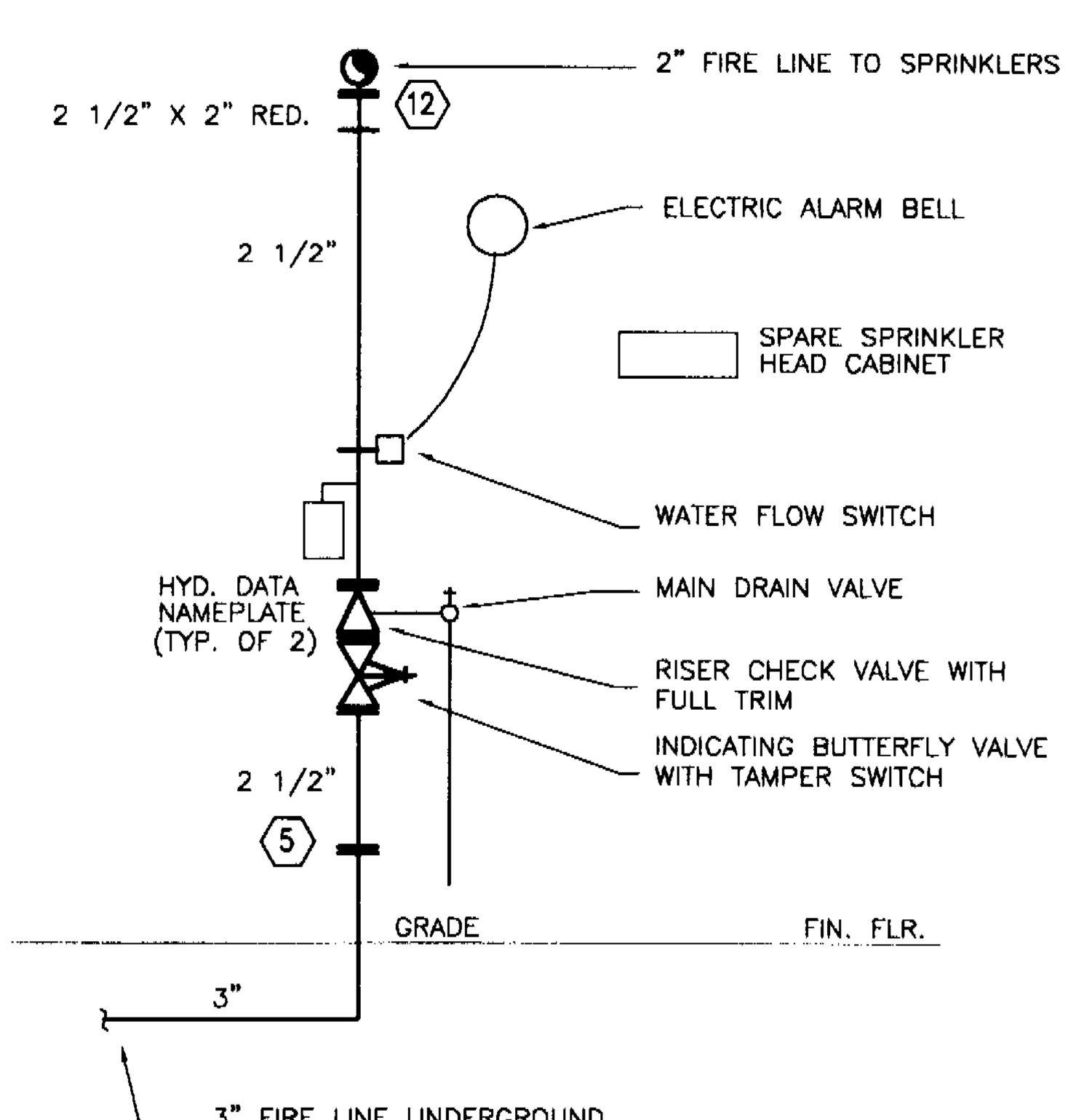

FIRE PROTECTION PIPING SCHEMATIC
N.T.S.

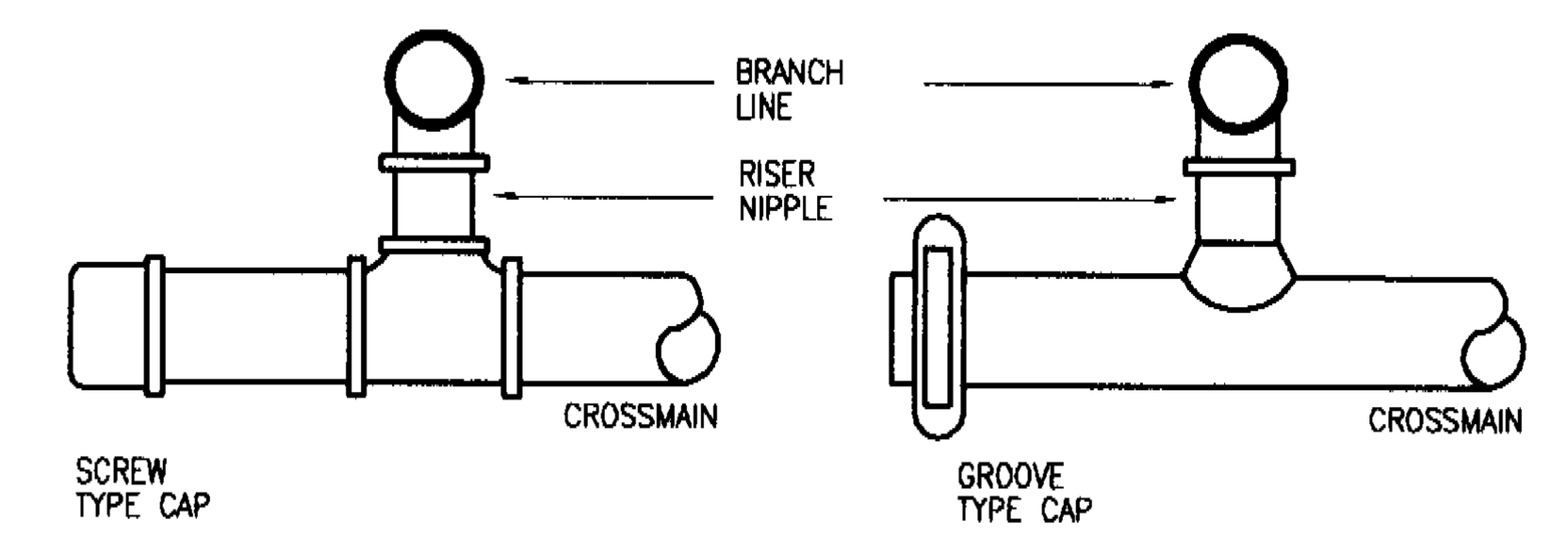

NOTE:
ALL CROSSMAINS SHALL TERMINATE IN MIN. 1 1/4" PIPE.ALL BRANCH LINES ON GRIDDED SYSTEMS SHALL BE ARRANGED TO FACILITATE FLUSHING OF THE SYSTEM.

TYPICAL FLUSHING CONNECTION
N.T.S.

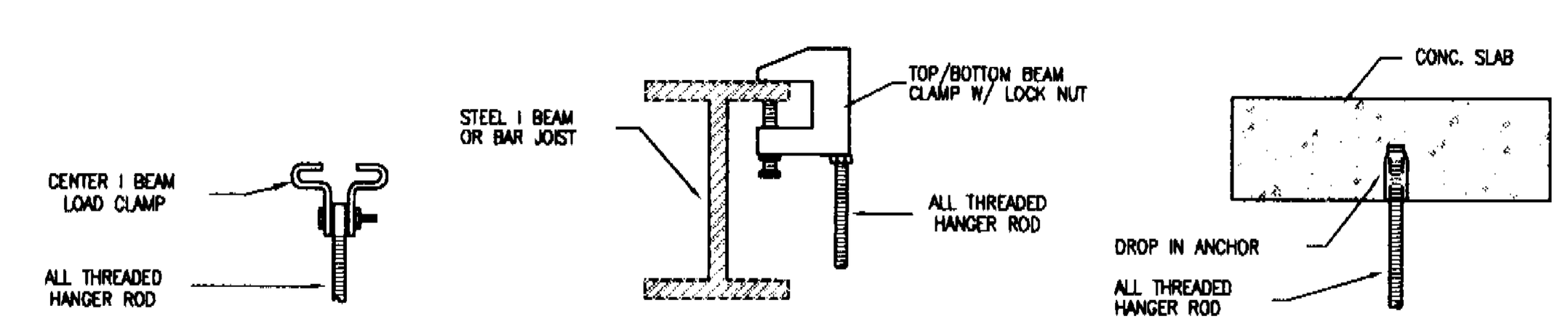

FASTENERS
N.T.S.
ALL FASTENERS SHALL BE LISTED FOR THEIR INTENDED SERVICE

POWDER DRIVEN STUDS MAY BE USED IN LIEU OF LISTED CONCRETE INSERTS WHERE APPROVED BY STRUCTURAL ENGINEER

ALL HANGERS, HANGER RODS, CLAMPS, COUPLINGS, ETC. SHALL BE PROVIDED WITH FACTORY APPLIED ELECTRO GALVANIZED FINISH FOR CORROSION PROTECTION

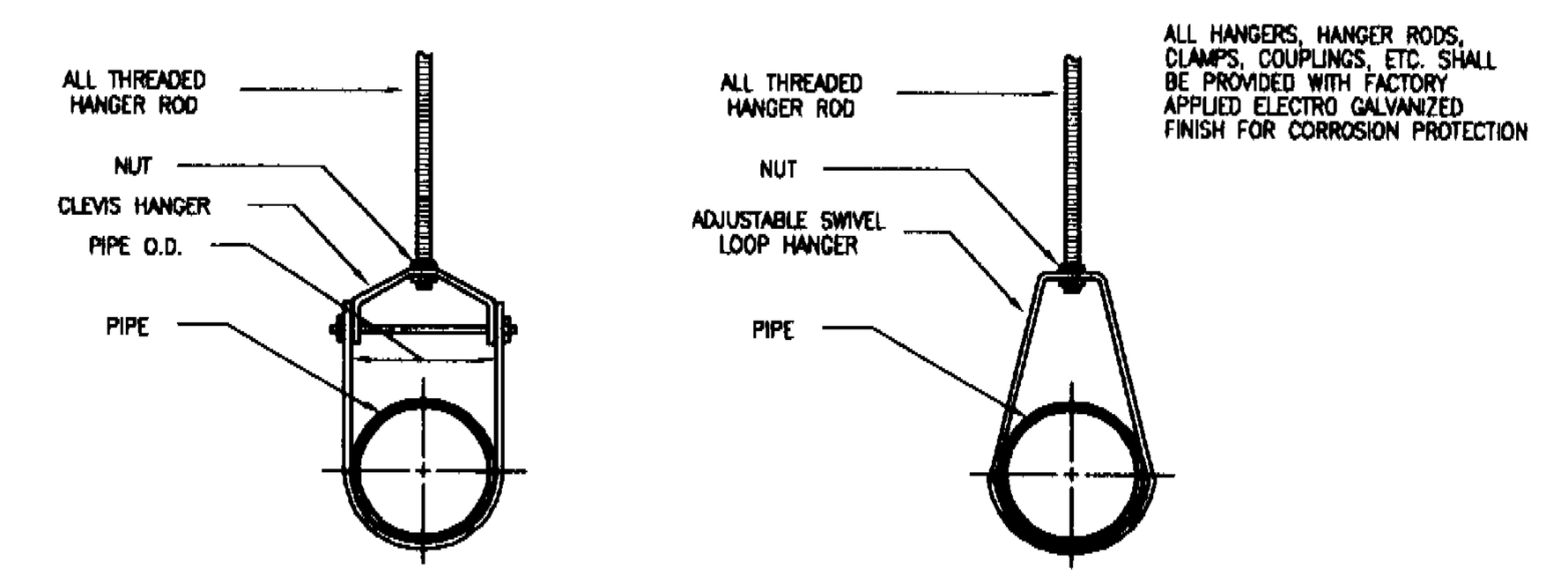

PIPE HANGERS
N.T.S.
ALL HANGERS SHALL BE LISTED FOR THEIR INTENDED SERVICE

HANGER ROD SIZES

UP TO 4" PIPE	3/8" DIA.
5" TO 8" PIPE	1/2" DIA.
10 & 12" PIPE	5/8" DIA.

MAXIMUM HANGER SPACING (FT.)										
PIPE SIZE (IN.)	3/4	1	1 1/4	1 1/2	2	2 1/2	3	4	6	8
THREADED LIGHTWALL STEEL PIPE	N/A	12	12	12	12	12	12	N/A	N/A	N/A
STEEL PIPE EXCEPT THREADED LIGHTWALL	N/A	12	12	15	15	15	15	15	15	15
CPVC	5'-6"	6	6'-6"	7	8	9	10	N/A	N/A	N/A

NOTES:
1. MAXIMUM DISTANCE BETWEEN END SPRINKLER AND LAST HANGER ON BRANCH LINES SHALL NOT EXCEED 36" FOR 1" PIPE, 48" FOR 1 1/4" PIPE AND 60" FOR 1 1/2" OR LARGER PIPE SIZE. EXTEND BRANCH LINE AND PROVIDE ADDITIONAL HANGER WHERE REQUIRED.
2. MAXIMUM HORIZONTAL LENGTH OF AN UNSUPPORTED ARMOVER TO A SPRINKLER, SPRINKLER DROP OR SPRIG-UP SHALL NOT EXCEED 24".
3. MINIMUM DISTANCE BETWEEN A HANGER AND CENTERLINE OF AN UPRIGHT SPRINKLER TO BE 3".
4. WALL MOUNTED SIDEWALL SPRINKLERS SHALL BE RESTRAINED TO PREVENT MOVEMENT.
5. HANGERS FOR MAINS SHALL BE IN ACCORDANCE WITH SPACING TABLE ABOVE OR BETWEEN EACH BRANCHLINE, WHICHEVER IS THE LESSER DIMENSION.

OFFICE COPY
CITY OF MIAMI BEACH
APPROVED FOR PERMIT BY THE FOLLOWING:
BUILDING:
ZONING:
DRB/HPB:
CONCURRENCY:
PLUMBING:
ELECTRICAL:
MECHANICAL:
FIRE PREVENTION:
ENGINEERING:
PUBLIC WORKS:
STRUCTURAL:
ACCESSIBILITY:
ELEVATOR:
As per Florida Building Code Section 104.5.3
REVIEWED FOR CODE COMPLIANCE

NEW FOR 1529 JEFFERSON AVE MIAMI BEACH, FL 33139

CITY OF MIAMI BEACH

6/15/06

DRAWN BY:

REVISIONS:

3D DESIGN, INC.
ANTHONY LEON
AR0016752
ARCHITECTURE
4300 BISCAYNE BLVD. SUITE#G04 MIAMI, FL 33137 T.305.438.9377 F.305.438.9378

SEAL

FIRE PROTECTION NOTES & DETAILS
SCALE: N.T.S.

Innovative Engineering Group Inc. CA#6717
5532 N.W. 72nd Ave
Miami, FL 33166
305-888-9626
Sudhir K. Gupta, P.E.
Fla. Reg. No. 29189

F1
JUNE 9, 2006

SPRINKLERS HAVE BEEN OMITTED IN THE FOLLOWING AREAS AS ALLOWED BY NFPA 13R:

BATHROOMS LESS THAN 55 SQ. FT.

CLOTHES CLOSETS, LINEN CLOSETS AND PANTRIES LESS THAN 24 SQ. FT. WITH THE LEAST DIMENSION NOT EXCEEDING 3 FT.

PORCHES, BALCONIES, CORRIDORS AND STAIRS THAT ARE OPEN AND ATTACHED.

ATTIC SPACES, PENTHOUSE EQUIPMENT ROOMS, CRAWLSPACES, FLOOR/CEILING SPACES, ELEVATOR SHAFTS, AND OTHER CONCEALED SPACES NOT USED FOR LIVING OR STORAGE.

CLOSETS ON EXTERIOR BALCONIES WHERE NO DOORS OR UNPROTECTED PENETRATIONS FROM THE CLOSET DIRECTLY INTO THE DWELLING UNIT.

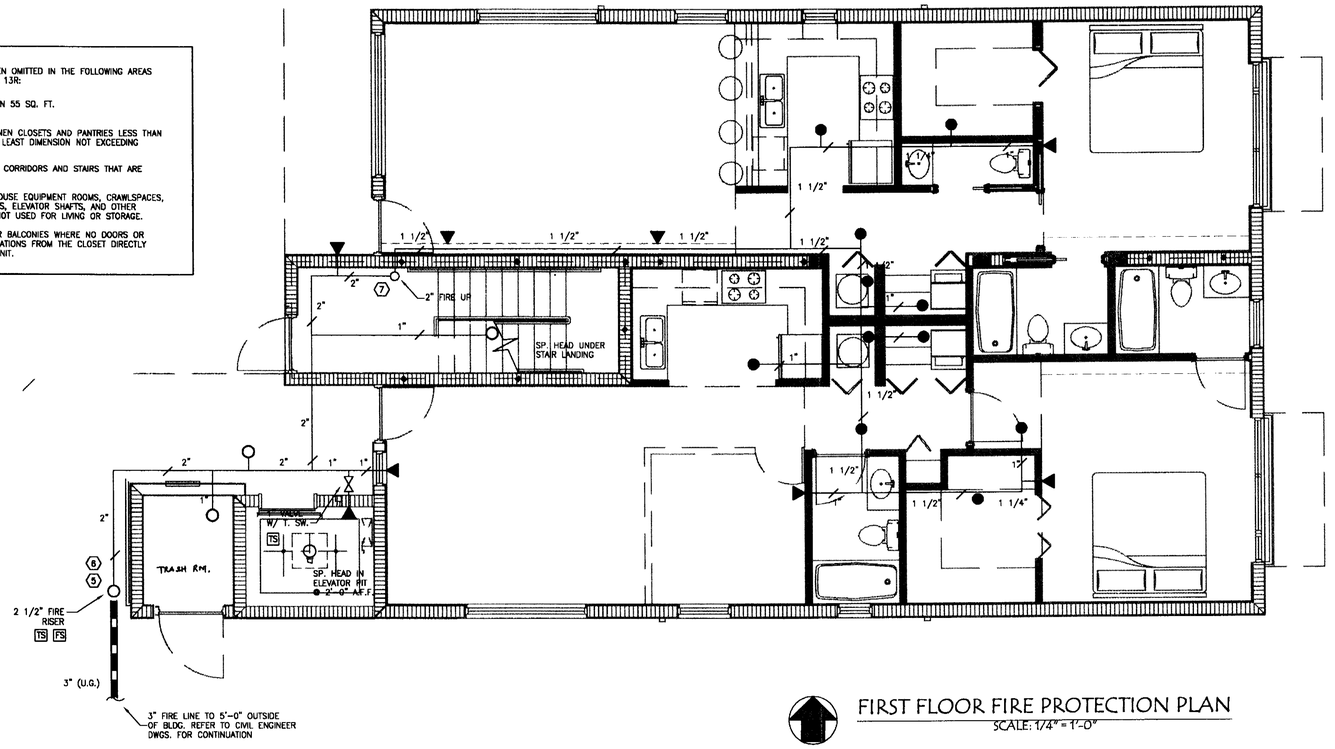

FIRST FLOOR FIRE PROTECTION PLAN
SCALE: 1/4" = 1'-0"

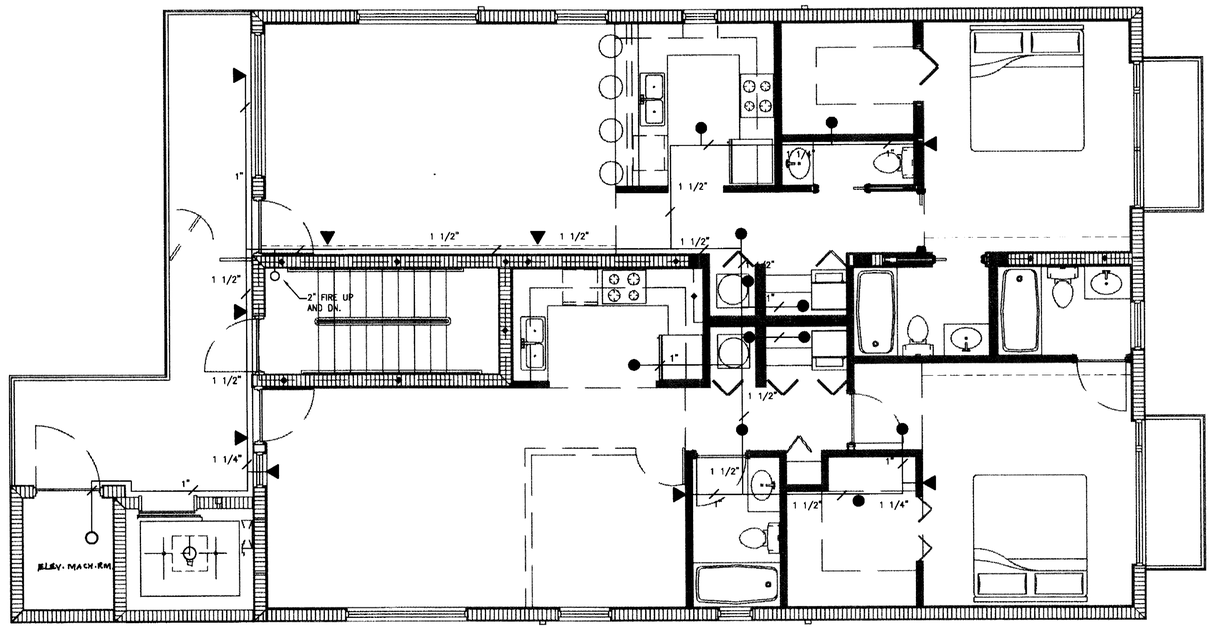

SECOND FLOOR FIRE PROTECTION PLAN
SCALE: 1/4" = 1'-0"

GENERAL NOTES

1. ALL PIPING,HANGERS,SUPPORT METHODS AND SPRINKLER HEADS TO BE INSTALLED IN STRICT ACCORDANCE WITH N.F.P.A. 13, N.F.P.A. 13R, AND ALL LOCAL CODES AND ORDINANCES.
2. SPARE SPRINKLER HEADS AND WRENCHES SHALL BE PROVIDED IN ACCORDANCE WITH N.F.P.A. 13, N.F.P.A. 13R.
3. ALL RATED WALLS AND FLOORS TO BE PROPERLY SLEEVED AND SEALED WITH APPROVED FIRE/SMOKE STOP MATERIAL.
4. HYDRAULIC DATA PLACE CARD TO BE PLACED ON SYSTEM RISER.
5. ALL SPRINKLER HEADS IN ELEVATOR MACHINE ROOMS,ELECTRICAL ROOMS AND MECHANICAL ROOMS SHALL BE PROVIDED WITH HEAD GUARDS.
6. PROVIDE INSPECTOR'S TEST CONNECTION AND DRAIN AS PER N.F.P.A. 13 REQUIREMENTS.
7. TEMPERATURE CLASSIFICATION FOR ALL SPRINKLER HEADS SHALL BE ORDINARY UNLESS NOTED OTHERWISE.
8. DESIGN CRITERIA:
   WITHIN TOWNHOMES DESIGN SHALL BE BASED ON N.F.P.A. 13R, FLOWING FOUR MOST REMOTE SPRINKLER HEADS. SPRINKLER FLOW AND PRESSURE SHALL BE IN ACCORDANCE WITH MANUFACTURER'S LISTING.

   SPRINKLERS HAVE BEEN OMITTED IN THE FOLLOWING AREAS AS ALLOWED BY NFPA 13R:

   BATHROOMS LESS THAN 55 SQ. FT. (SHOWER/TUB ENCLOSURE NOT REQUIRED TO BE INCLUDED IN FLOOR AREA).

   CLOTHES CLOSETS, LINEN CLOSETS AND PANTRIES LESS THAN 24 SQ. FT. WITH THE LEAST DIMENSION NOT EXCEEDING 3 FT.

   PORCHES, BALCONIES, CORRIDORS AND STAIRS THAT ARE OPEN AND ATTACHED.

   ATTIC SPACES, PENTHOUSE EQUIPMENT ROOMS, CRAWLSPACES, FLOOR/CEILING SPACES, ELEVATOR SHAFTS, AND OTHER CONCEALED SPACES NOT USED FOR LIVING OR STORAGE.

   CLOSETS ON EXTERIOR BALCONIES WHERE NO DOORS OR UNPROTECTED PENETRATIONS FROM THE CLOSET DIRECTLY INTO THE DWELLING UNIT.
9. ALL VALVES CONTROLLING WATER SUPPLY SHALL BE LOCKED IN OPEN POSITION.COORDINATE LOCATION OF ALL FLOW AND TAMPER SWITCHES WITH ELECTRICAL CONTRACTOR.
10. ALL PIPING ABOVE GROUND SHALL BE LIGHTWALL THREADABLE STEEL PIPE FOR 2" AND SMALLER, ROLL AND GROOVED SCHEDULE 10 STEEL PIPE FOR PIPING 2 1/2" AND LARGER. ALLIED XL AND ALLIED SCH. 10 OR APPROVED EQUAL.
    ALL PIPING AT EXTERIOR AREAS SHALL BE FACTORY HOT-DIPPED GALVANIZED PIPE AND FITTINGS.

    FITTINGS FOR PIPING 2" AND SMALLER SHALL BE MALLEABLE IRON, 150 PSI BANDED,THREADED,BLACK.ANSI B 16.3.

    FITTINGS FOR PIPING 2 1/2" AND LARGER SHALL BE MECHANICAL COUPLING SYSTEM AS MANUFACTURED BY VICTAULIC CORP.OR GRINNELL CORP. "GRUVLOCK".
    ALL GROOVED FITTINGS SHALL BE FROM SAME MANUFACTURER.

    UNDERGROUND PIPING SHALL BE DUCTILE CAST IRON, BELL AND SPIGOT AWWA C111 AND C151,FITTINGS SHALL BE MECHANICAL JOINT CAST IRON, AWWA C110 AND C111,AND FLANGED FITTINGS AWWA C110. FOR STRAIGHT RUNS OF PIPE: "TYTON" PUSH ON TYPE JOINT.

    ALL PIPE AND FITTINGS SHALL BE U.L. LISTED AND/OR F.M. APPROVED, AND OF DOMESTIC MANUFACTURER.
11. PRESSURE TEST AND FLUSH THE SYSTEM IN ACCORDANCE WITH N.F.P.A. 13 REQUIREMENTS. SUBMIT CONTRACTOR'S MATERIAL AND TEST CERTIFICATE FOR UNDERGROUND AND ABOVEGROUND PIPING. ALL WATERFLOW SWITCHES AND SUPERVISORY SWITCHES SHALL BE TESTED FOR PROPER OPERATION AND ANNUCIATION. FURNISH TO OWNER'S REPRESENTATIVE ALL LITERATURE AND INSTRUCTIONS FOR THE PROPER OPERATION AND MAINTENANCE OF ANY EQUIPMENT AND DEVICES INSTALLED AND A COPY OF N.F.P.A. 25-"STANDARD FOR THE INSPECTION, TESTING AND MAINTENANCE OF WATER BASED FIRE PROTECTION SYSTEM".
12. PROVIDE AUXILIARY DRAIN CONNECTION FOR ALL TRAPPED PIPING SECTIONS IN ACCORDANCE WITH N.F.P.A. 13R.PROVIDE FLUSHING CONNECTIONS AS REQUIRED. REMOVEABLE FITTINGS SHALL BE PROVIDED AT END OF CROSSMAINS.
13. ALL FIRE PROTECTION EQUIPMENT AND DEVICES SHALL BE U.L. LISTED AND FACTORY MUTUAL (FM) APPROVED, AND OF DOMESTIC MANUFACTURER.
14. GATE VALVES 2" AND SMALLER SHALL BE O.S.&Y. THREADED BRONZE, RISING STEM,WEDGE DISC,175 WWP.GATE VALVES 2 1/2" AND LARGER SHALL BE O.S.&Y. FLANGED IBBM RISING STEM,SOLID WEDGE DISC,175 WWP.ALL GATE VALVES SHALL BE U.L. LISTED AND F.M. APPROVED.
    ALL VALVES AND DEVICES AT EXTERIOR SHALL BE LISTED FOR EXTERIOR APPLICATION
15. CHECK VALVES 2 1/2" AND LARGER SHALL BE FLANGED IBBM SWING TYPE,BRONZE MOUNTED,175 WWP CLASS.U.L. LISTED AND F.M. APPROVED. RISER CHECK VALVES SHALL BE PROVIDED WITH FULL TRIM INCLUDING PRESSURE GAUGES, MAIN DRAIN VALVE, ALL NIPPLES AND FITTINGS.
    ALL VALVES AND DEVICES AT EXTERIOR SHALL BE LISTED FOR EXTERIOR APPLICATION
16. SUPERVISORY SWITCHES SHALL BE 120 VOLT CLOSED CIRCUIT TAMPER SWITCH, U.L. LISTED AND F.M. APPROVED.FLOW SWITCHES SHALL BE PADDLE TYPE,SINGLE POLE, DOUBLE THROW WITH ADJUSTMENT FOR SENSITIVITY TO FLOW WITH TIME DELAY, U.L. LISTED AND F.M. APPROVED.
    ALL ALARM DEVICES AT EXTERIOR SHALL BE LISTED FOR EXTERIOR APPLICATION
17. HOSE THREADS AT FIRE DEPARTMENT CONNECTIONS SHALL CONFORM WITH LOCAL FIRE DEPARTMENT STANDARDS.
18. THE WORK THAT IS TO BE DONE UNDER THIS CONTRACT INCLUDES THE FURNISHING OF ALL LABOR,MATERIALS AND EQUIPMENT ,PERMITS,FEES,INSPECTIONS,TESTS, INSURANCE,ETC. REQUIRED FOR THE COMPLETION OF FIRE PROTECTION SYSTEM SHOWN ON THE DRAWINGS AND LISTED HEREIN.
19. THE DRAWINGS ARE GENERALLY DIAGRAMMATIC.THEY DO NOT SHOW EVERY BEND,OFFSET OR OTHER FITTINGS WHICH MAY BE REQUIRED FOR THE INSTALLATION IN THE SPACE ALLOCATED, OR FOR COORDINATION WITH OTHER TRADES. VERIFY ALL SPACE CONDITIONS AND DIMENSIONS AT JOBSITE PRIOR TO FABRICATION OF PIPING AND INSTALLATION OF EQUIPMENT AND MATERIALS.
20. ALL WORK SHALL BE IN ACCORDANCE WITH N.F.P.A. 13R, 24, 25, 101, AND IN ACCORDANCE WITH THE FLORIDA 2004 BUILDING CODE, AND ALL LOCAL CODES AND ORDINANCES.

DRAWN BY:

REVISIONS:
1 OWNER REVISION 11/06/06
2 BLDG. DEPT. COMMENTS 01/10/07

3DESIGN INC
ANTHONY LEON
ARCHITECTURE
AR0026752
4300 BISCAYNE BLVD. SUITE#604 MIAMI, FL 33137 T.305.438.9377 F.305.438.9378

SEAL

NEW BLDG
OR
1529 JEFFERSON AVE
MIAMI BEACH, FL
33139

CONSTRUCTION COPY
MIAMI BEACH
PERMIT BY
BLDG:
JUN 12 2007
ELEC:
PLUMB:
PUBLIC WORKS:
STRUCTURAL:
ACCESSIBILITY:

Innovative Engineering Group Inc. CA#6717
5532 N.W. 72nd Ave
Miami, FL 33166
305-888-9626
Sudhir K. Gupta, P.E.
Fla. Reg. No. 29189

2/8/07

2
1

F2

JUNE 9, 2006

SPRINKLERS HAVE BEEN OMITTED IN THE FOLLOWING AREAS AS ALLOWED BY NFPA 13R:

BATHROOMS LESS THAN 55 SQ. FT.

CLOTHES CLOSETS, LINEN CLOSETS AND PANTRIES LESS THAN 24 SQ. FT. WITH THE LEAST DIMENSION NOT EXCEEDING 3 FT.

PORCHES, BALCONIES, CORRIDORS AND STAIRS THAT ARE OPEN AND ATTACHED.

ATTIC SPACES, PENTHOUSE EQUIPMENT ROOMS, CRAWLSPACES, FLOOR/CEILING SPACES, ELEVATOR SHAFTS, AND OTHER CONCEALED SPACES NOT USED FOR LIVING OR STORAGE.

CLOSETS ON EXTERIOR BALCONIES WHERE NO DOORS OR UNPROTECTED PENETRATIONS FROM THE CLOSET DIRECTLY INTO THE DWELLING UNIT.

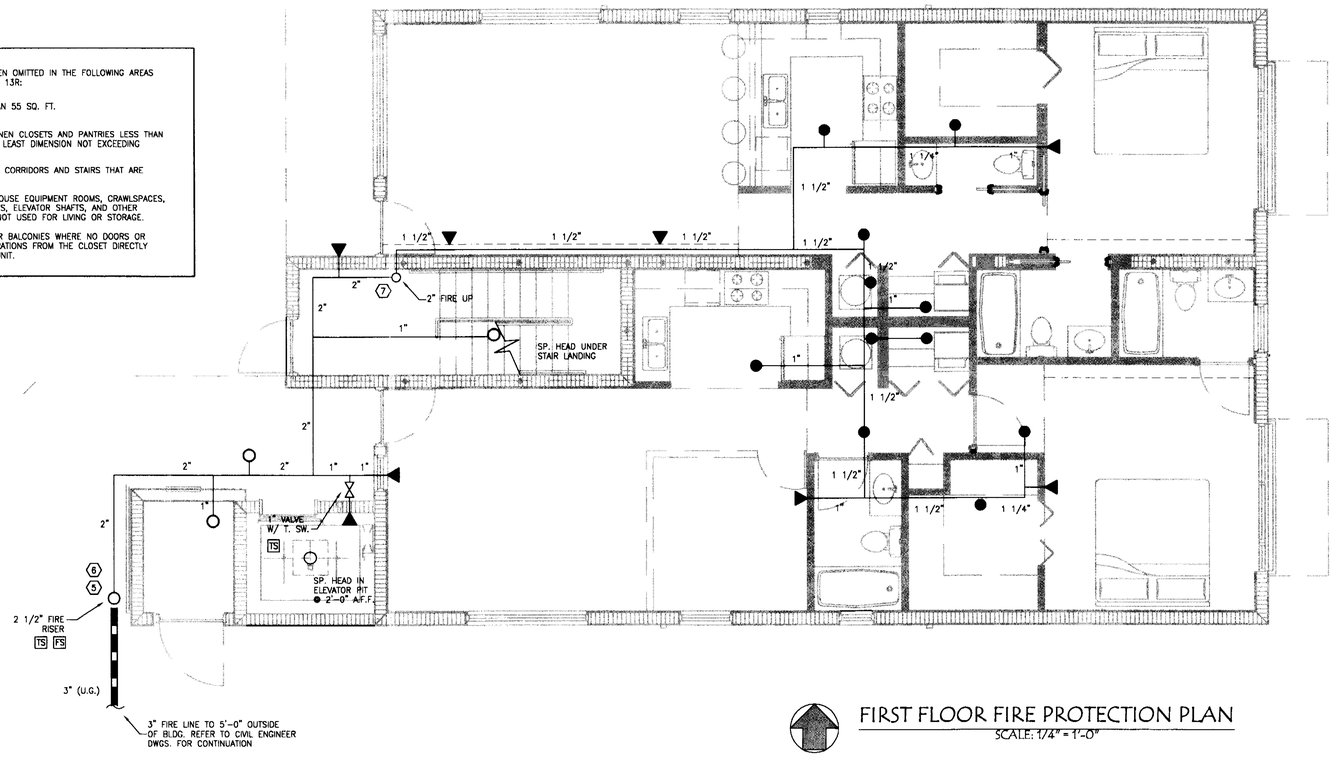

FIRST FLOOR FIRE PROTECTION PLAN
SCALE: 1/4" = 1'-0"

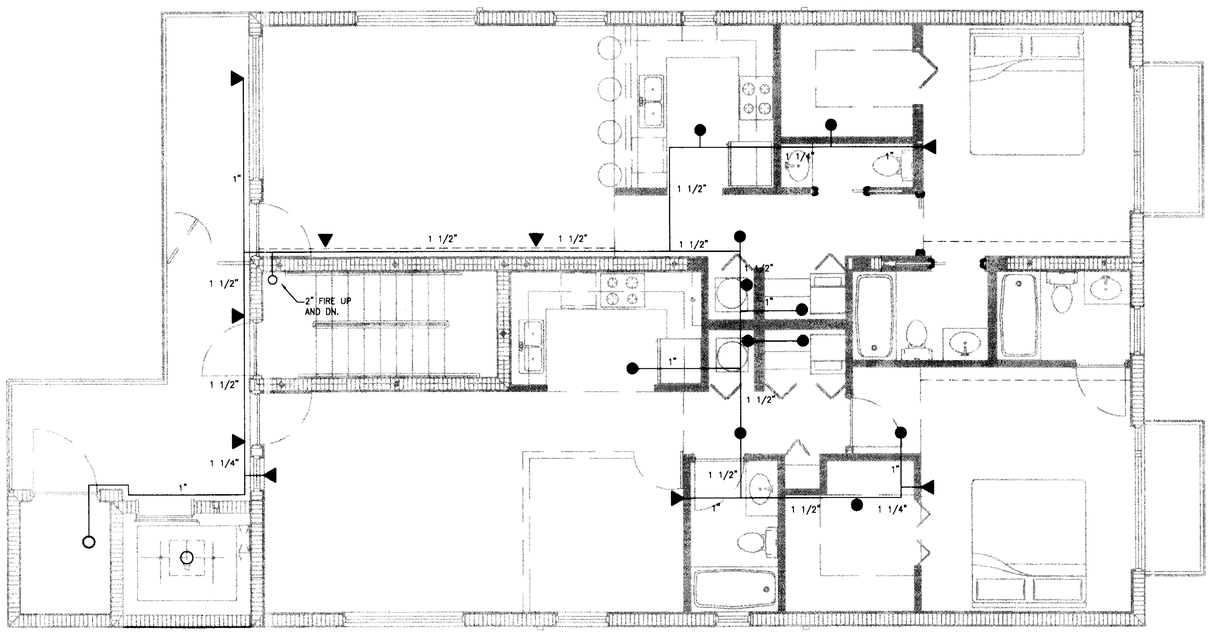

SECOND FLOOR FIRE PROTECTION PLAN
SCALE: 1/4" = 1'-0"

GENERAL NOTES

1. ALL PIPING,HANGERS,SUPPORT METHODS AND SPRINKLER HEADS TO BE INSTALLED IN STRICT ACCORDANCE WITH N.F.P.A. 13, N.F.P.A. 13R, AND ALL LOCAL CODES AND ORDINANCES.
2. SPARE SPRINKLER HEADS AND WRENCHES SHALL BE PROVIDED IN ACCORDANCE WITH N.F.P.A. 13, N.F.P.A. 13R.
3. ALL RATED WALLS AND FLOORS TO BE PROPERLY SLEEVED AND SEALED WITH APPROVED FIRE/SMOKE STOP MATERIAL.
4. HYDRAULIC DATA PLACE CARD TO BE PLACED ON SYSTEM RISER.
5. ALL SPRINKLER HEADS IN ELEVATOR MACHINE ROOMS,ELECTRICAL ROOMS AND MECHANICAL ROOMS SHALL BE PROVIDED WITH HEAD GUARDS.
6. PROVIDE INSPECTOR'S TEST CONNECTION AND DRAIN AS PER N.F.P.A. 13 REQUIREMENTS.
7. TEMPERATURE CLASSIFICATION FOR ALL SPRINKLER HEADS SHALL BE ORDINARY UNLESS NOTED OTHERWISE.
8. DESIGN CRITERIA:

   WITHIN TOWNHOMES DESIGN SHALL BE BASED ON N.F.P.A. 13R, FLOWING FOUR MOST REMOTE SPRINKLER HEADS. SPRINKLER FLOW AND PRESSURE SHALL BE IN ACCORDANCE WITH MANUFACTURER'S LISTING.

   SPRINKLERS HAVE BEEN OMITTED IN THE FOLLOWING AREAS AS ALLOWED BY NFPA 13R:

   BATHROOMS LESS THAN 55 SQ. FT. (SHOWER/TUB ENCLOSURE NOT REQUIRED TO BE INCLUDED IN FLOOR AREA).

   CLOTHES CLOSETS, LINEN CLOSETS AND PANTRIES LESS THAN 24 SQ. FT. WITH THE LEAST DIMENSION NOT EXCEEDING 3 FT.

   PORCHES, BALCONIES, CORRIDORS AND STAIRS THAT ARE OPEN AND ATTACHED.

   ATTIC SPACES, PENTHOUSE EQUIPMENT ROOMS, CRAWLSPACES, FLOOR/CEILING SPACES, ELEVATOR SHAFTS, AND OTHER CONCEALED SPACES NOT USED FOR LIVING OR STORAGE.

   CLOSETS ON EXTERIOR BALCONIES WHERE NO DOORS OR UNPROTECTED PENETRATIONS FROM THE CLOSET DIRECTLY INTO THE DWELLING UNIT.

9. ALL VALVES CONTROLLING WATER SUPPLY SHALL BE LOCKED IN OPEN POSITION.COORDINATE LOCATION OF ALL FLOW AND TAMPER SWITCHES WITH ELECTRICAL CONTRACTOR.
10. ALL PIPING ABOVE GROUND SHALL BE LIGHTWALL THREADABLE STEEL PIPE FOR 2" AND SMALLER, ROLL AND GROOVED SCHEDULE 10 STEEL PIPE FOR PIPING 2 1/2" AND LARGER. ALLIED XL AND ALLIED SCH. 10 OR APPROVED EQUAL.
    ALL PIPING AT EXTERIOR AREAS SHALL BE FACTORY HOT-DIPPED GALVANIZED PIPE AND FITTINGS.

    FITTINGS FOR PIPING 2" AND SMALLER SHALL BE MALLEABLE IRON, 150 PSI BANDED,THREADED,BLACK,ANSI B 16.3.

    FITTINGS FOR PIPING 2 1/2" AND LARGER SHALL BE MECHANICAL COUPLING SYSTEM AS MANUFACTURED BY VICTAULIC CORP.OR GRINNELL CORP. "GRUVLOCK".
    ALL GROOVED FITTINGS SHALL BE FROM SAME MANUFACTURER.

    UNDERGROUND PIPING SHALL BE DUCTILE CAST IRON, BELL AND SPIGOT AWWA C111 AND C151.FITTINGS SHALL BE MECHANICAL JOINT CAST IRON, AWWA C110 AND C111.AND FLANGED FITTINGS AWWA C110.
    FOR STRAIGHT RUNS OF PIPE: "TYTON" PUSH ON TYPE JOINT.

    ALL PIPE AND FITTINGS SHALL BE U.L. LISTED AND/OR F.M. APPROVED, AND OF DOMESTIC MANUFACTURER.
11. PRESSURE TEST AND FLUSH THE SYSTEM IN ACCORDANCE WITH N.F.P.A. 13R REQUIREMENTS. SUBMIT N.F.P.A. 13 FORMS 85A AND 85B.
12. PROVIDE AUXILIARY DRAIN CONNECTION FOR ALL TRAPPED PIPING SECTIONS IN ACCORDANCE WITH N.F.P.A. 13R.PROVIDE FLUSHING CONNECTIONS AS REQUIRED. REMOVABLE FITTINGS SHALL BE PROVIDED AT END OF CROSSMAINS.
13. ALL FIRE PROTECTION EQUIPMENT AND DEVICES SHALL BE U.L. LISTED AND FACTORY MUTUAL (FM) APPROVED, AND OF DOMESTIC MANUFACTURER.
14. GATE VALVES 2" AND SMALLER SHALL BE O.S.&Y. THREADED BRONZE, RISING STEM,WEDGE DISC,175 WWP.GATE VALVES 2 1/2" AND LARGER SHALL BE O.S.&Y. FLANGED IBBM RISING STEM,SOLID WEDGE DISC,175 WWP.ALL GATE VALVES SHALL BE U.L. LISTED AND F.M. APPROVED.
    ALL VALVES AND DEVICES AT EXTERIOR SHALL BE LISTED FOR EXTERIOR APPLICATION
15. CHECK VALVES 2 1/2" AND LARGER SHALL BE FLANGED IBBM SWING TYPE,BRONZE MOUNTED,175 WWP CLASS,U.L. LISTED AND F.M. APPROVED.
    RISER CHECK VALVES SHALL BE PROVIDED WITH FULL TRIM INCLUDING PRESSURE GAUGES, MAIN DRAIN VALVE, ALL NIPPLES AND FITTINGS.
    ALL VALVES AND DEVICES AT EXTERIOR SHALL BE LISTED FOR EXTERIOR APPLICATION
16. SUPERVISORY SWITCHES SHALL BE 120 VOLT CLOSED CIRCUIT TAMPER SWITCH, U.L. LISTED AND F.M. APPROVED.FLOW SWITCHES SHALL BE PADDLE TYPE,SINGLE POLE, DOUBLE THROW WITH ADJUSTMENT FOR SENSITIVITY TO FLOW WITH TIME DELAY, U.L. LISTED AND F.M. APPROVED.
    ALL ALARM DEVICES AT EXTERIOR SHALL BE LISTED FOR EXTERIOR APPLICATION
17. HOSE THREADS AT FIRE DEPARTMENT CONNECTIONS SHALL CONFORM WITH LOCAL FIRE DEPARTMENT STANDARDS.
18. THE WORK THAT IS TO BE DONE UNDER THIS CONTRACT INCLUDES THE FURNISHING OF ALL LABOR,MATERIALS AND EQUIPMENT ,PERMITS,FEES,INSPECTIONS,TESTS, INSURANCE,ETC. REQUIRED FOR THE COMPLETION OF FIRE PROTECTION SYSTEM SHOWN ON THE DRAWINGS AND LISTED HEREIN.
19. THE DRAWINGS ARE GENERALLY DIAGRAMMATIC.THEY DO NOT SHOW EVERY BEND,OFFSET OR OTHER FITTINGS WHICH MAY BE REQUIRED FOR THE INSTALLATION IN THE SPACE ALLOCATED, OR FOR COORDINATION WITH OTHER TRADES. VERIFY ALL SPACE CONDITIONS AND DIMENSIONS AT JOBSITE PRIOR TO FABRICATION OF PIPING AND INSTALLATION OF EQUIPMENT AND MATERIALS.
20. ALL WORK SHALL BE IN ACCORDANCE WITH N.F.P.A. 13R, 24, 25, 101, AND IN ACCORDANCE WITH THE FLORIDA 2004 BUILDING CODE, AND ALL LOCAL CODES AND ORDINANCES.

DRAWN BY:

REVISIONS:
1 OWNER REVISION 11/06/06

3DESIGN INC
ANTHONY LEON
ARCHITECTURE
AR0016752
4300 BISCAYNE BLVD. SUITE#604 MIAMI, FL 33137 T.305.438.9377 F.305.438.9378

SEAL

NEW BLGD
FOR
1529 JEFFERSON AVE
MIAMI BEACH, FL
33139

CITY OF MIAMI BEACH
APPROVED
11/9/06

Innovative Engineering Group Inc. CA#6717
5532 N.W. 72nd Ave
Miami, FL 33166
305-888-9626
Sudhir K. Gupta, P.E.
Fla. Reg. No. 29189

1

F2

JUNE 9, 2006

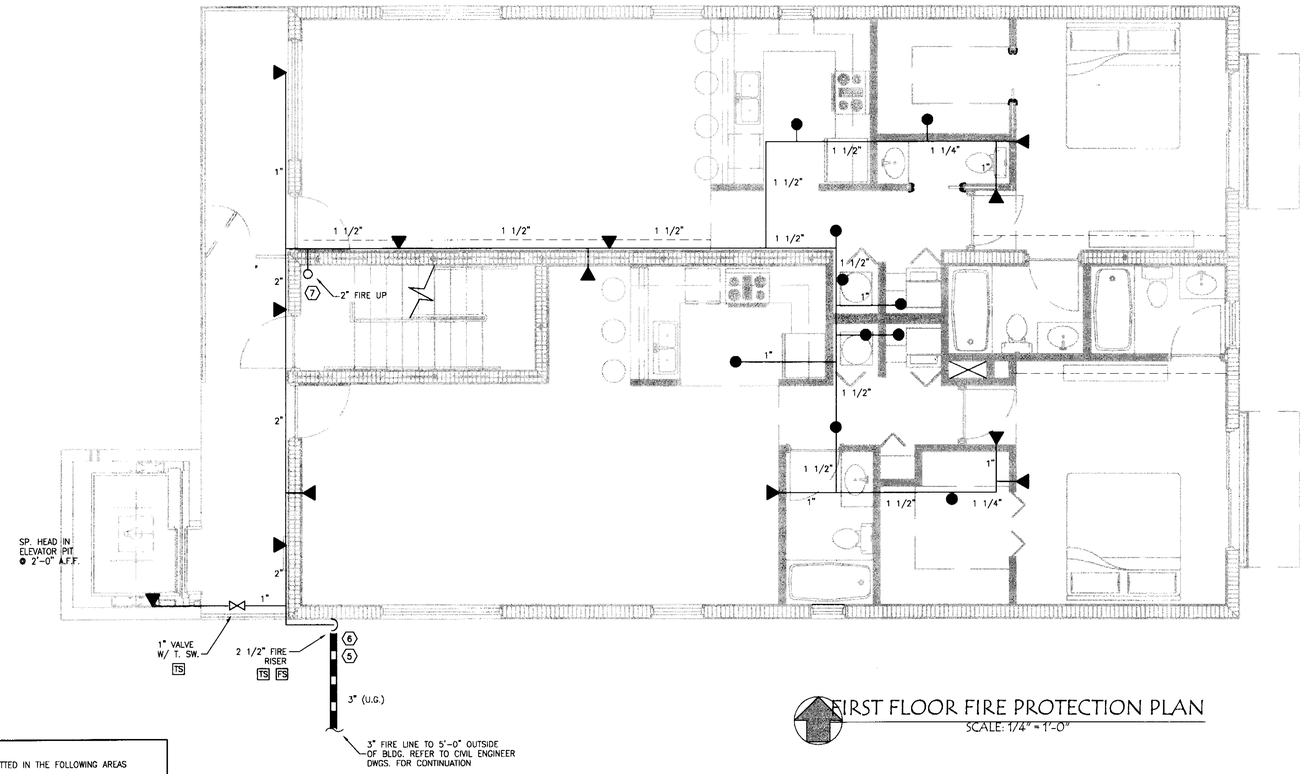

FIRST FLOOR FIRE PROTECTION PLAN
SCALE: 1/4" = 1'-0"

SPRINKLERS HAVE BEEN OMITTED IN THE FOLLOWING AREAS AS ALLOWED BY NFPA 13R:

BATHROOMS LESS THAN 55 SQ. FT.

CLOTHES CLOSETS, LINEN CLOSETS AND PANTRIES LESS THAN 24 SQ. FT. WITH THE LEAST DIMENSION NOT EXCEEDING 3 FT.

PORCHES, BALCONIES, CORRIDORS AND STAIRS THAT ARE OPEN AND ATTACHED.

ATTIC SPACES, PENTHOUSE EQUIPMENT ROOMS, CRAWLSPACES, FLOOR/CEILING SPACES, ELEVATOR SHAFTS, AND OTHER CONCEALED SPACES NOT USED FOR LIVING OR STORAGE.

CLOSETS ON EXTERIOR BALCONIES WHERE NO DOORS OR UNPROTECTED PENETRATIONS FROM THE CLOSET DIRECTLY INTO THE DWELLING UNIT.

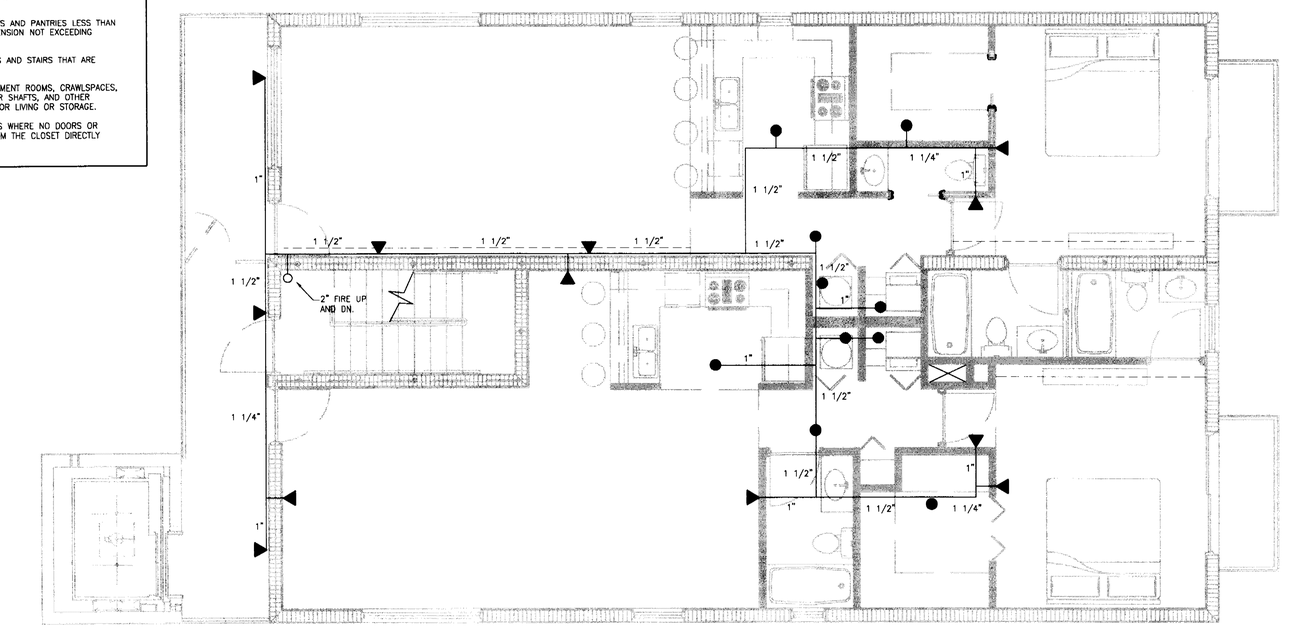

SECOND FLOOR FIRE PROTECTION PLAN
SCALE: 1/4" = 1'-0"

GENERAL NOTES

1. ALL PIPING,HANGERS,SUPPORT METHODS AND SPRINKLER HEADS TO BE INSTALLED IN STRICT ACCORDANCE WITH N.F.P.A. 13, N.F.P.A. 13R, AND ALL LOCAL CODES AND ORDINANCES.
2. SPARE SPRINKLER HEADS AND WRENCHES SHALL BE PROVIDED IN ACCORDANCE WITH N.F.P.A. 13, N.F.P.A. 13R.
3. ALL RATED WALLS AND FLOORS TO BE PROPERLY SLEEVED AND SEALED WITH APPROVED FIRE/SMOKE STOP MATERIAL.
4. HYDRAULIC DATA PLACE CARD TO BE PLACED ON SYSTEM RISER.
5. ALL SPRINKLER HEADS IN ELEVATOR MACHINE ROOMS,ELECTRICAL ROOMS AND MECHANICAL ROOMS SHALL BE PROVIDED WITH HEAD GUARDS.
6. PROVIDE INSPECTOR'S TEST CONNECTION AND DRAIN AS PER N.F.P.A. 13 REQUIREMENTS.
7. TEMPERATURE CLASSIFICATION FOR ALL SPRINKLER HEADS SHALL BE ORDINARY UNLESS NOTED OTHERWISE.
8. DESIGN CRITERIA:

   WITHIN TOWNHOMES DESIGN SHALL BE BASED ON N.F.P.A. 13R, FLOWING FOUR MOST REMOTE SPRINKLER HEADS. SPRINKLER FLOW AND PRESSURE SHALL BE IN ACCORDANCE WITH MANUFACTURER'S LISTING.

   SPRINKLERS HAVE BEEN OMITTED IN THE FOLLOWING AREAS AS ALLOWED BY NFPA 13R:

   BATHROOMS LESS THAN 55 SQ. FT. (SHOWER/TUB ENCLOSURE NOT REQUIRED TO BE INCLUDED IN FLOOR AREA).

   CLOTHES CLOSETS, LINEN CLOSETS AND PANTRIES LESS THAN 24 SQ. FT. WITH THE LEAST DIMENSION NOT EXCEEDING 3 FT.

   PORCHES, BALCONIES, CORRIDORS AND STAIRS THAT ARE OPEN AND ATTACHED.

   ATTIC SPACES, PENTHOUSE EQUIPMENT ROOMS, CRAWLSPACES, FLOOR/CEILING SPACES, ELEVATOR SHAFTS, AND OTHER CONCEALED SPACES NOT USED FOR LIVING OR STORAGE.

   CLOSETS ON EXTERIOR BALCONIES WHERE NO DOORS OR UNPROTECTED PENETRATIONS FROM THE CLOSET DIRECTLY INTO THE DWELLING UNIT.
9. ALL VALVES CONTROLLING WATER SUPPLY SHALL BE LOCKED IN OPEN POSITION.COORDINATE LOCATION OF ALL FLOW AND TAMPER SWITCHES WITH ELECTRICAL CONTRACTOR.
10. ALL PIPING ABOVE GROUND SHALL BE LIGHTWALL THREADABLE STEEL PIPE FOR 2" AND SMALLER, ROLL AND GROOVED SCHEDULE 10 STEEL PIPE FOR PIPING 2 1/2" AND LARGER. ALLIED XL AND ALLIED SCH. 10 OR APPROVED EQUAL.
    ALL PIPING AT EXTERIOR AREAS SHALL BE FACTORY HOT-DIPPED GALVANIZED PIPE AND FITTINGS.

    FITTINGS FOR PIPING 2" AND SMALLER SHALL BE MALLEABLE IRON, 150 PSI BANDED,THREADED,BLACK.ANSI B 16.3.

    FITTINGS FOR PIPING 2 1/2" AND LARGER SHALL BE MECHANICAL COUPLING SYSTEM AS MANUFACTURED BY VICTAULIC CORP.OR GRINNELL CORP. "GRUVLOCK".
    ALL GROOVED FITTINGS SHALL BE FROM SAME MANUFACTURER.

    UNDERGROUND PIPING SHALL BE DUCTILE CAST IRON, BELL AND SPIGOT. AWWA C111 AND C151.FITTINGS SHALL BE MECHANICAL JOINT CAST IRON, AWWA C110 AND C111,AND FLANGED FITTINGS AWWA C110. FOR STRAIGHT RUNS OF PIPE: "TYTON" PUSH ON TYPE JOINT.

    ALL PIPE AND FITTINGS SHALL BE U.L. LISTED AND/OR F.M. APPROVED, AND OF DOMESTIC MANUFACTURER.
11. PRESSURE TEST AND FLUSH THE SYSTEM IN ACCORDANCE WITH N.F.P.A. 13R REQUIREMENTS. SUBMIT N.F.P.A. 13 FORMS 85A AND 85B.
12. PROVIDE AUXILIARY DRAIN CONNECTION FOR ALL TRAPPED PIPING SECTIONS IN ACCORDANCE WITH N.F.P.A. 13R.PROVIDE FLUSHING CONNECTIONS AS REQUIRED. REMOVEABLE FITTINGS SHALL BE PROVIDED AT END OF CROSSMAINS.
13. ALL FIRE PROTECTION EQUIPMENT AND DEVICES SHALL BE U.L. LISTED AND FACTORY MUTUAL (FM) APPROVED, AND OF DOMESTIC MANUFACTURER.
14. GATE VALVES 2" AND SMALLER SHALL BE O.S.&Y. THREADED BRONZE. RISING STEM,WEDGE DISC,175 WWP.GATE VALVES 2 1/2" AND LARGER SHALL BE O.S.&Y. FLANGED IBBM RISING STEM,SOLID WEDGE DISC,175 WWP.ALL GATE VALVES SHALL BE U.L. LISTED AND F.M. APPROVED.
    ALL VALVES AND DEVICES AT EXTERIOR SHALL BE LISTED FOR EXTERIOR APPLICATION
15. CHECK VALVES 2 1/2" AND LARGER SHALL BE FLANGED IBBM SWING TYPE,BRONZE MOUNTED,175 WWP CLASS,U.L. LISTED AND F.M. APPROVED. RISER CHECK VALVES SHALL BE PROVIDED WITH FULL TRIM INCLUDING PRESSURE GAUGES, MAIN DRAIN VALVE, ALL NIPPLES AND FITTINGS.
    ALL VALVES AND DEVICES AT EXTERIOR SHALL BE LISTED FOR EXTERIOR APPLICATION
16. SUPERVISORY SWITCHES SHALL BE 120 VOLT CLOSED CIRCUIT TAMPER SWITCH, U.L. LISTED AND F.M. APPROVED.FLOW SWITCHES SHALL BE PADDLE TYPE,SINGLE POLE, DOUBLE THROW WITH ADJUSTMENT FOR SENSITIVITY TO FLOW WITH TIME DELAY. U.L. LISTED AND F.M. APPROVED.
    ALL ALARM DEVICES AT EXTERIOR SHALL BE LISTED FOR EXTERIOR APPLICATION
17. HOSE THREADS AT FIRE DEPARTMENT CONNECTIONS SHALL CONFORM WITH LOCAL FIRE DEPARTMENT STANDARDS.
18. THE WORK THAT IS TO BE DONE UNDER THIS CONTRACT INCLUDES THE FURNISHING OF ALL LABOR,MATERIALS AND EQUIPMENT ,PERMITS,FEES,INSPECTIONS,TESTS, INSURANCE,ETC. REQUIRED FOR THE COMPLETION OF FIRE PROTECTION SYSTEM SHOWN ON THE DRAWINGS AND LISTED HEREIN.
19. THE DRAWINGS ARE GENERALLY DIAGRAMMATIC.THEY DO NOT SHOW EVERY BEND,OFFSET OR OTHER FITTINGS WHICH MAY BE REQUIRED FOR THE INSTALLATION IN THE SPACE ALLOCATED, OR FOR COORDINATION WITH OTHER TRADES. VERIFY ALL SPACE CONDITIONS AND DIMENSIONS AT JOBSITE PRIOR TO FABRICATION OF PIPING AND INSTALLATION OF EQUIPMENT AND MATERIALS.
20. ALL WORK SHALL BE IN ACCORDANCE WITH N.F.P.A. 13R, 24, 25, 101, AND IN ACCORDANCE WITH THE FLORIDA 2004 BUILDING CODE, AND ALL LOCAL CODES AND ORDINANCES.

3DESIGN INC
ANTHONY LEON
ARCHITECTURE
AA0006752
4500 BISCAYNE BLVD. SUITE#204 MIAMI, FL 33137 T.305.438.9577 F.305.438.9378

DRAWN BY:

REVISIONS:

SEAL

NEW BLGD FOR 1229 JEFFERSON AVE MIAMI BEACH, FL 33139

OFFICE COPY
CITY OF MIAMI BEACH
APPROVED FOR PERMIT BY THE FOLLOWING:

BUILDING:
ZONING:
DRB/HPB:
CONCURRENCY:
PLUMBING:
ELECTRICAL:
MECHANICAL:
FIRE PREVENTION:
ENGINEERING:
PUBLIC WORKS:
STRUCTURAL:
ACCESSIBILITY:
ELEVATOR:
As per Field Inspection Report dated 6/19/06

CITY OF MIAMI BEACH

Innovative Engineering Group Inc. CA#6717
5632 N.W. 72nd Ave
Miami, FL 33166
305-888-9626
Sudhir K. Gupta, P.E.
Fla. Reg. No. 29189

F2

JUNE 9, 2006

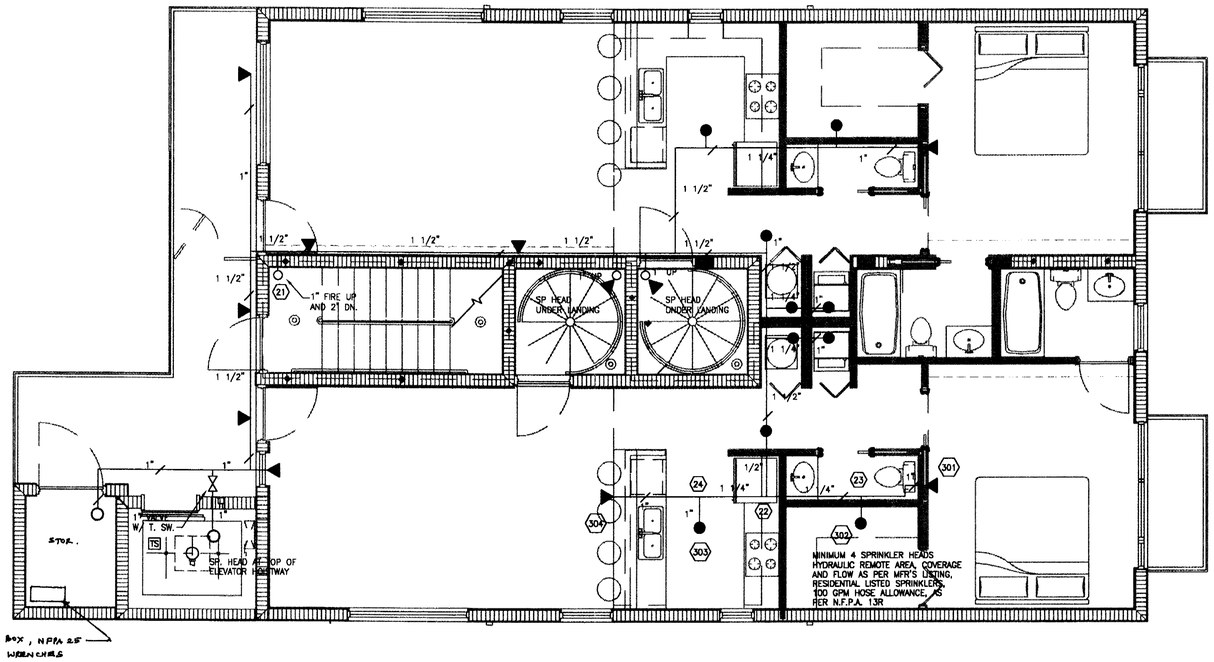

THIRD FLOOR FIRE PROTECTION PLAN
SCALE: 1/4" = 1'-0"

SPRINKLERS HAVE BEEN OMITTED IN THE FOLLOWING AREAS AS ALLOWED BY NFPA 13R:

BATHROOMS LESS THAN 55 SQ. FT.

CLOTHES CLOSETS, LINEN CLOSETS AND PANTRIES LESS THAN 24 SQ. FT. WITH THE LEAST DIMENSION NOT EXCEEDING 3 FT.

PORCHES, BALCONIES, CORRIDORS AND STAIRS THAT ARE OPEN AND ATTACHED.

ATTIC SPACES, PENTHOUSE EQUIPMENT ROOMS, CRAWLSPACES, FLOOR/CEILING SPACES, ELEVATOR SHAFTS, AND OTHER CONCEALED SPACES NOT USED FOR LIVING OR STORAGE.

CLOSETS ON EXTERIOR BALCONIES WHERE NO DOORS OR UNPROTECTED PENETRATIONS FROM THE CLOSET DIRECTLY INTO THE DWELLING UNIT.

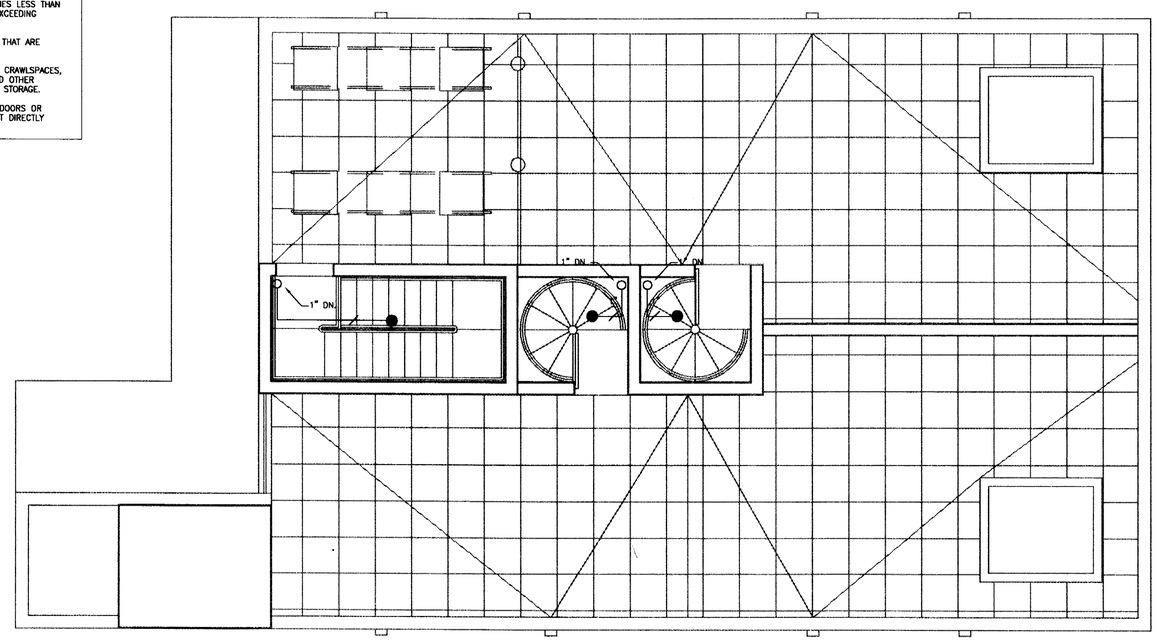

FIRE PROTECTION ROOF PLAN
SCALE: 1/4" = 1'-0"

DRAWN BY:

REVISIONS:
1 OWNER REVISION 11/06/06
2 BLDG DEPT. COMMENTS 01/10/07

3DESIGN, INC
ANTHONY LEON
AR0016752
ARCHITECTURE
4300 BISCAYNE BLVD. SUITE#G04 MIAMI, FL 33137 T.305.438.9377 F.305.438.9378

SEAL

NEW BLGD
FOR
1529 JEFFERSON AVE
MIAMI BEACH, FL
33139

OFFICE COPY
CITY OF MIAMI BEACH
RECEIVED FOR PERMIT BY
FOLLOWING:
2 JUN 1 2 2006
FIRE PREVENTION:
ENGINEERING:
PUBLIC WORKS:
STRUCTURAL:
ACCESSIBILITY:

2
1

Innovative Engineering Group Inc. CA#6717
5532 N.W. 72nd Ave
Miami, FL 33166
305-888-9626
Sudhir K. Gupta, P.E.
Fla. Reg. No. 29189

2/8/07

F3
JUNE 9, 2006

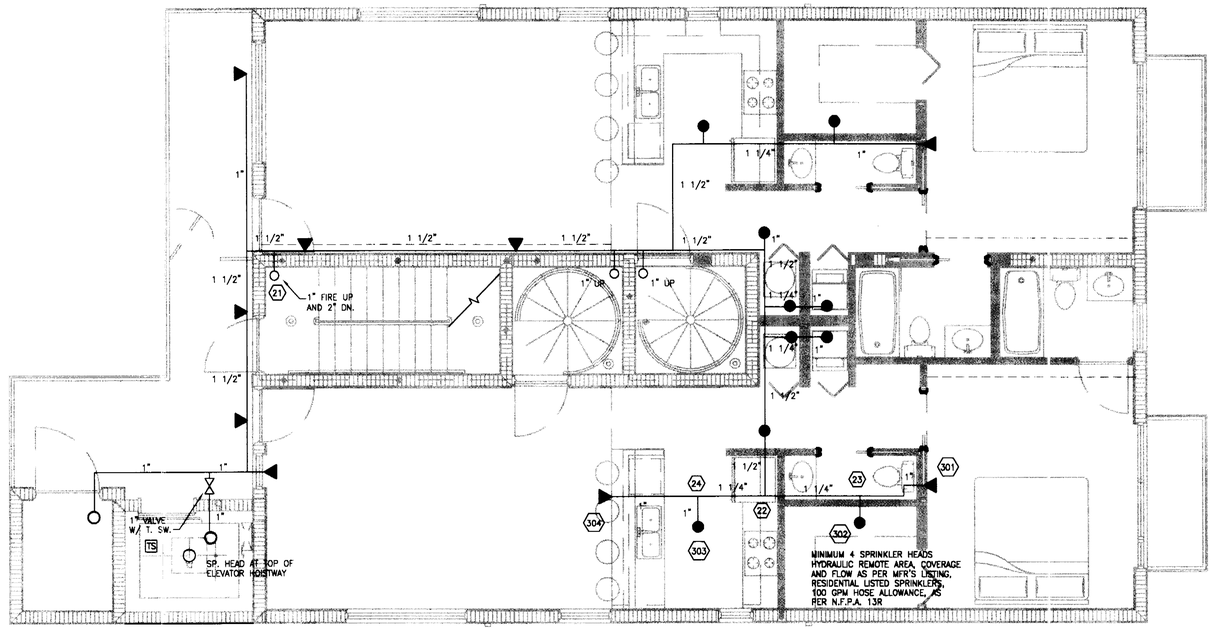

THIRD FLOOR FIRE PROTECTION PLAN
SCALE: 1/4" = 1'-0"

SPRINKLERS HAVE BEEN OMITTED IN THE FOLLOWING AREAS AS ALLOWED BY NFPA 13R:

BATHROOMS LESS THAN 55 SQ. FT.

CLOTHES CLOSETS, LINEN CLOSETS AND PANTRIES LESS THAN 24 SQ. FT. WITH THE LEAST DIMENSION NOT EXCEEDING 3 FT.

PORCHES, BALCONIES, CORRIDORS AND STAIRS THAT ARE OPEN AND ATTACHED.

ATTIC SPACES, PENTHOUSE EQUIPMENT ROOMS, CRAWLSPACES, FLOOR/CEILING SPACES, ELEVATOR SHAFTS, AND OTHER CONCEALED SPACES NOT USED FOR LIVING OR STORAGE.

CLOSETS ON EXTERIOR BALCONIES WHERE NO DOORS OR UNPROTECTED PENETRATIONS FROM THE CLOSET DIRECTLY INTO THE DWELLING UNIT.

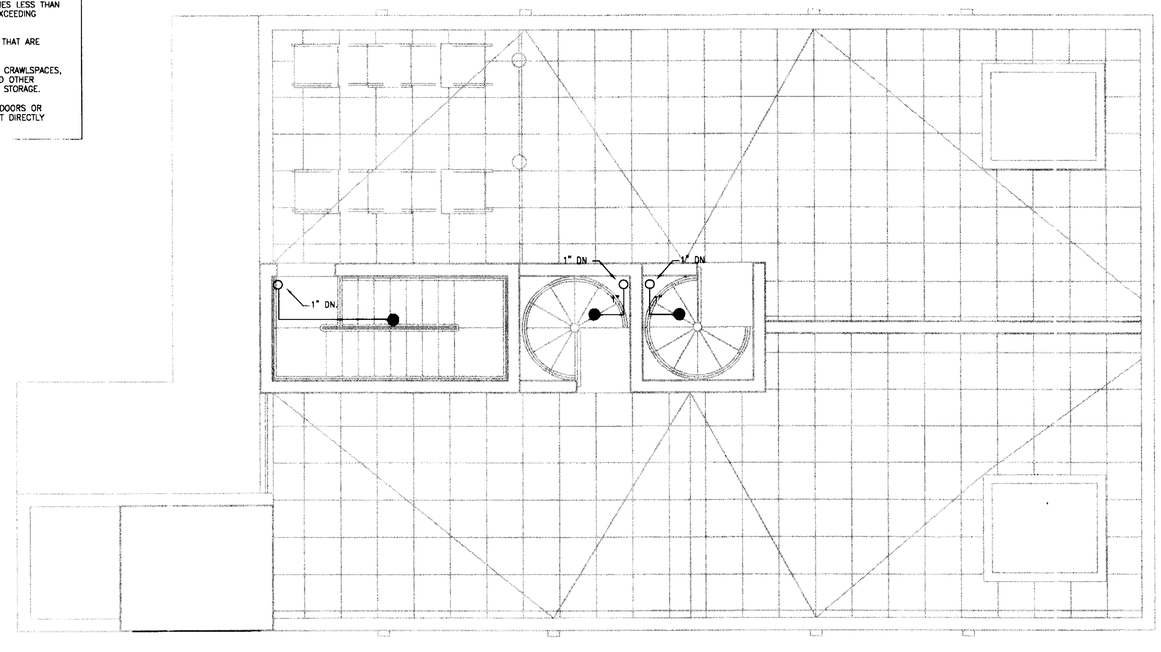

FIRE PROTECTION ROOF PLAN
SCALE: 1/4" = 1'-0"

DRAWN BY:

REVISIONS:
1 OWNER REVISION 11/06/06

3DESIGN INC
ANTHONY LEON
ARCHITECTURE
AA0006252
4500 BISCAYNE BLVD. SUITE#204 MIAMI, FL 33137 T.305.438.9377 F.305.458.9378

SEAL

NEW BLGD
FOR
1529 JEFFERSON AVE
MIAMI BEACH, FL
33139

CITY OF MIAMI BEACH
11/1d/06

1

Innovative Engineering Group Inc. CA#6717
5532 N.W. 72nd Ave
Miami, FL 33166
305-886-9626
Sudhir K. Gupta, P.E.
Fla. Reg. No. 29169

F3

JUNE 9, 2006

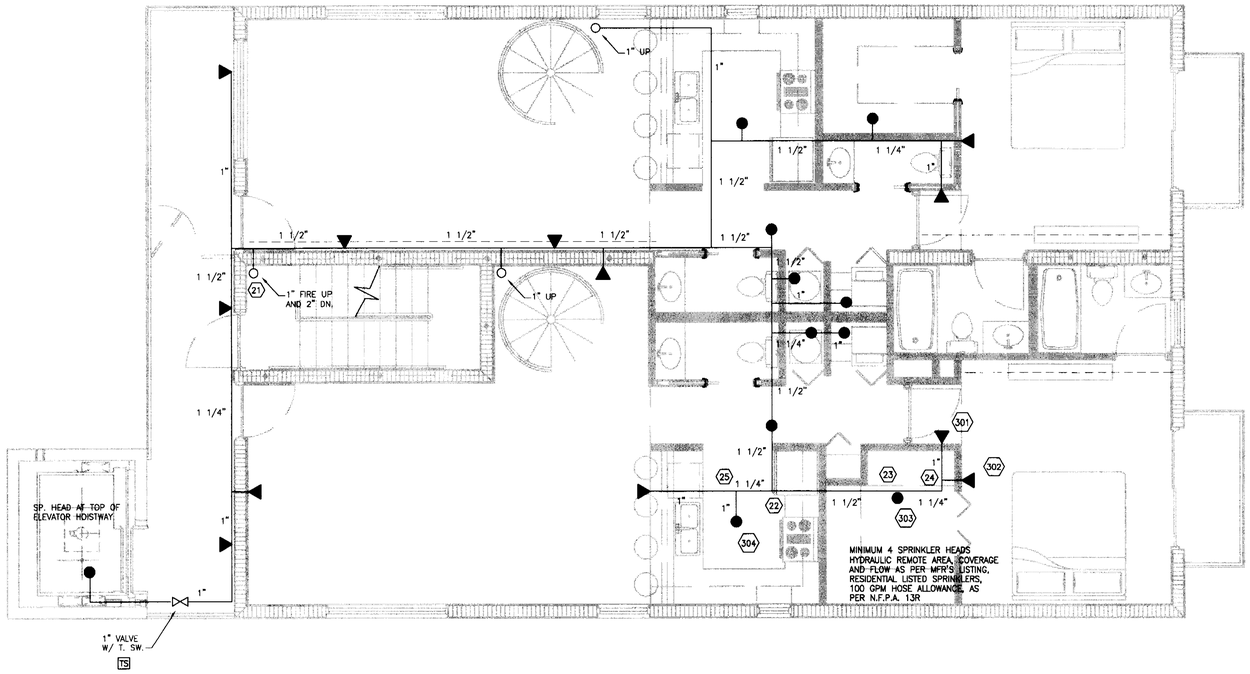
1" UP
1"
1 1/2"
1 1/4"
1 1/2"
1 1/2"
1 1/2"
1 1/2"
1 1/2"
1 1/2"
1 1/4"
1"
1 1/2"
1 1/2"
1 1/2"
1 1/2"
1 1/2"
1 1/4"
1"
1 1/2"
1 1/2"
1 1/4"
1"
1 1/2"
1 1/4"
1"
1"
1

REVISIONS	BY

8-16-07

3DESIGN INC
ARCHITECTURE
ANTHONY LEON
AR0006752
4300 BISCAYNE BLVD SUITE#004 MIAMI, FL 33137 T 305 438 9377 F 305 438 9378

SEAL

NEW BUILDING
FOR
1529 JEFFERSON AVE
MIAMI BEACH, FL
33139

DRAWN	AEA
CHECKED	
DATE	
SCALE	1/8" = 1'-0"
JOB NO.	
SHEET	L51
OF	SHEETS

TECHNICAL IMAGE PRODUCTS

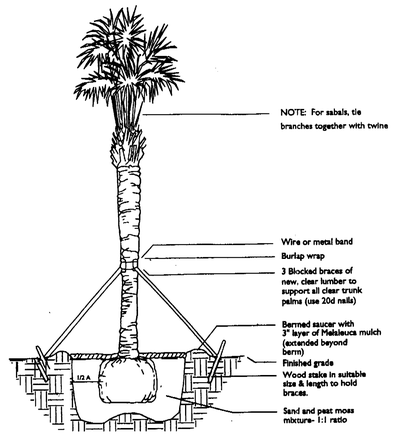

PALM PLANTING DETAIL

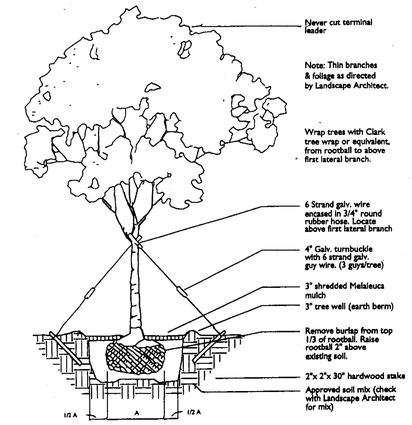

TREE PLANTING DETAIL

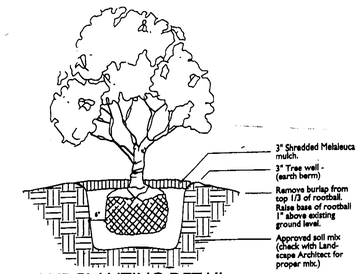

SHRUB PLANTING DETAIL

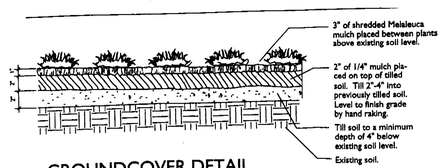

GROUNDCOVER DETAIL

NTS.

Plant List

Trees & Palms

Symbol	Name	Common Name	Quanity	Specifications	Native
QV	Quercus Virginiana	Live Oak	3	12'-14' oa	Yes
FS	Forestiera Segregata	Florida Privet	2	6'-8' oa	Yes
WB	Wodyetia Bifurcata	Foxtail Palm	4	8'-10' oa	No
CO	Chryophyllum Oliviforme	Satin Leaf	2	10'-12' oa	Yes
VM	Veitchia Montgomeryyana	Montgomery Palm	7	10'-12'oa triple	No
AM	Adonidia Merrilli	Christmas Palm	2	8'-10' oa double	No

Native 44%

Shrubs

Symbol	Name	Common Name	Quanity	Specifications	
TM	Trimezia Martinicensis	Walking Iris	28	3 gal full	No
ST	Sophora Tomentosa	Necklace Pod	10	3 gal full	Yes
TD	Tripsacum Dactyloides	Fakahatchee Grass	12	3 gal full	Yes
HP	Hamelia Patens	Fire Bush	7	3 gal 24" ht	Yes
ZP	Zamia Pumila	Coontie	36	3 gal full	Yes
CI	Chrysobalanus Icaco	Cocoplum "Red Tip"	44	3 gal 24" ht	Yes
AD	Acrostichum Danaeifolium	Leather Fern	30	3 gal full	Yes
CF	Cordyline Fruticosa	Red TI Sister	3	3 gal full	No
CC	Chamaedorea Cataractum	Cat Palm	10	7 gal full	No
AH	Acalypha Hispida	Chenille	10	3 gal full	No
CB	Costas Barbatus	Costus	9	3 gal full	No
B"AW"	Begonia "Angel Wing"	Begonia "Angel Wing"	15	3 gal Full	No
RI	Rhaphiolepis Indica	Indian Hawthorn	34	3 gal full	Yes
CES	Conocarpus Erectus Sericeus	Silver Button Wood	74	3 gal 24"ht	Yes

Native 70%

Ground Cover

Symbol	Name	Common Name	Quanity	Specifications	Native
GP	Gaillardia Pulchella	Blanket Flower	9	1 gal full	Yes
HD	Helianthus Debilis	Dune Sunflower	48	1 gal full	Yes
EG	Evolvulus Glomerata	Blue Daze	40	1 gal full	No

Native 58%

Irrigation Notes:

All Landscape areas shall be irrigated by a fully automatic system adjusted to provide 100% coverage of all landscaped areas. All heads shall be adjusted to manufacturer's recommended settings, with a minimum of 50% of overlap. The system is to be installed by a licensed irrigation specialist who will be responsible for obtaining all pertinent permits and shall be available for inspections. The system shall be equipped with a rain sensor that will override the irrigation cycle of the sprinkler system when adequate rain fall has occurred, In accordance with Miami Beach, Florida ecological ordinance.

Landscape Notes:

-The exterior equipment is to be screened on three sides with a hedge that is 6" taller than the equipment.
-The trees and sensitive plant materials that are to remain are to be protected by orange temporary fencing. The area is to be clearly marked as sensitive and no entrance to this area is to be made by the contractor or the subs. There is to be no equipment or materials stored in these areas. Any damage to the plant materials or trees will be terms for a charge back to the contractor.
-All trees to be removed may require the Arborist to submit the necessary permit and get permission from the City of Miami Beach, prior to any work being done.
- A 3" layer of Brown cypress mulch is to be used at base of all plantings.

REVISIONS	BY

3DESIGN INC.
ANTHONY LEON
AR0006752
ARCHITECTURE
4500 BISCAYNE BLVD. SUITE#604 MIAMI, FL 33137 T 305 458 9377 F 305 458 9378

SEAL

NEW BUILDING
FOR
1529 JEFFERSON AVE
MIAMI BEACH, FL
33139

DRAWN	
CHECKED	
DATE	
SCALE	
JOB NO.	
SHEET	L5-2
OF	SHEETS

TECHNICAL IMAGE PRODUCTS

DRAWN BY:
javier's Sprinklers inc
REVISIONS:

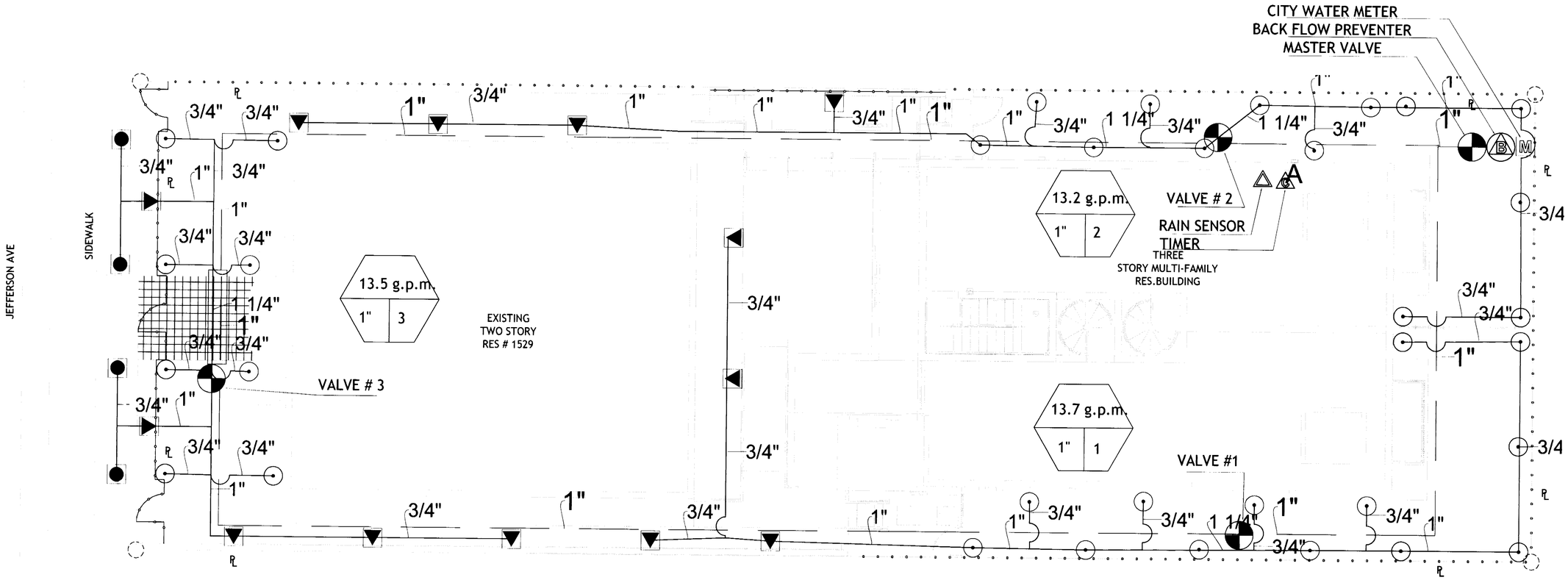

IRRIGATION PLAN
SCALE: 3/16" = 1'-0"

3DESIGN, INC
ANTHONY LEON
AR006752
ARCHITECTURE
4300 BISCAYNE BLVD. SUITE#G04 MIAMI, FL 33137 T.305.438.9377 F.305.438.9379

SEAL

NEW BUILDING
FOR
1529 JEFFERSON AVE
MIAMI BEACH, FL
33139

07.1.07

IR1
JUNE 6, 2006

IRRIGATION NOTES

1. THE CONTRACTOR SHALL BE RESPONSIBLE FOR CONTACTING LOCAL UNDERGROUNG UTILITIES TO VERIFY LOCATIONS. THE CONTRACTOR SHOULD VISIT THE SITE PRIOR TO INSTALLATION AND BECOME FAMILIAR WITH EXISTING CONDITIONS.
2. THE CONTRACTOR IS RESPONSIBLE FOR ALL MATERIAL REQUIRED TO MAKE THE SYSTEM FUNCTION PROPERLY. ALL IRRIGATION SHALL BE INSTALLED IN ACCORDANCE WITH MANUFACTURER'S SPECIFICATIONS AND ALSO STATE AND/OR LOCAL CODES.
3. IRRIGATION PLANS ARE SCHEMATIC AND DRAWN FOR GRAPHIC CLARITY. ALL PIPING BELOW PAVEMENT SHALL BE SLEEVED. LAYOUT OF IRRIGATION SYSTEM SHALL BE COORDINATED WITH CORRESPONDING LANDSCAPE PLAN.
4. SPRINKLER LOCATIONS ADJACENT TO PAVEMENT, STRUCTURES, FENCES, ETC. SHALL BE OFFSET AS FOLLOWS: 12" MIN FOR POP-UP MIST HEADS, 18" FOR SHRUB RISERS, 18" FOR ROTOR HEADS, AND TYPICALLY 5 FEET FOR ROTORS ALONG UNCURBED ROADWAYS.
5. ALL HEADS ON RISERS SHALL BE SET AT THE HEIGHT OF ADJACENT PLANT MATERIAL.
6. PIPING IN NARROW PLANTING AREAS, PARKING ISLANDS AND PLANTERS SHALL BE SET TO ONE SIDE TO ALLOW ROOM FOR ROOT BALLS. PIPE AS INDICATED ON PLAN IS SCHEMATIC AND SHOULD BE ADJUSTED FOR FIELD CONDITIONS.
7. PIPING SHALL BE SIZED TO MINIMIZE FRICTION LOSS AND MAINTAIN FLOW VELOCITY BELOW 5 FPS.
8. ALL SLEEVNG SHALL BE SCH 40 PVC TO SIZE INDICATED ON PLAN, OR IF NOT INDICATED, A MIN. OF 2 PIPE SIZES LARGER THAN SUPPLY LINE CONTAINED. ALL SLEEVES SHALL BE INSTALLED A MIN. OF 24" BELOW FINISH GRADE.
9. THE IRRIGATION CONTROLLER SHALL BE INSTALLED IN ACCORDANCE WITH LOCAL CODES AND MANUFACTURER'S RECOMMENDATIONS. PROPER GROUNDING EQUIPMENT AND SURGE PROTECTION SHALL BE PROVIDED. A RAIN SENSOR SHALL BE INSTALLED TO OVER-RIDE THE CONTROLLER.
10. CONTROL WIRES SHALL BE UL APPROVED PE IRRIGATION CONTROL WIRE. USE 14 GAGE CONTROL WIRE AND 12 GAGE GROUND WIRE. WIRE SHALL BE BUNDLED AND ATTACHED TO THE MAIN LINE IN TRENCH OR THROUGH WIRE SLEEVES AT PAVEMENT CROSSINGS 24" BELOW FIN. GRADE. ALL SPLICES SHALL BE MADE WITH WATERPROOF DIRECT-BURIAL SPLICE KITS AND CONTAINED IN VALVE BOXES. TWO EXTRA CONTROL WIRES SHALL BE INSTALLED TO THE FURTHEST VALVES IN EACH DIRECTION FROM THE CONTROLLER.
11. VALVE LOCATIONS ARE SCHEMATIC ONLY AND WILL BE ADJUSTED FOR SITE CONDITIONS. EACH VALVE SHALL BE INSTALLED IN A AMETEK OR CARSON VALVE BOX. THE FLOW ADJUSTMENT FEATURE WILL BE USED TO BALANCE PRESSURE THROUGHOUT THE SYSTEM.
12. WATERING TIME PER STATION WILL BE DETERMINED IN THE FIELD AND PER LOCAL REQUIREMENTS. REFER TO MANUFACTURER'S INSTRUCTIONS FOR PRECIPITATION RATES OF SPRINKLERS SPECIFIED.
13. SYSTEM PIPE SIZE s" SHALL BE CLASS 200 PVC; SYSTEM PIPE SIZE 1" OR GREATER SHALL BE CLASS 160 PVC. SYSTEM MAIN WILL BE SCH. 40 PVC TO SIZE INDICATED ON PLAN. ALL FITTINGS WILL BE SOLVENT WELD SCH 40 PVC. MAIN LINE SHALL HAVE 24" MINIMUM COVER; ALL OTHER PIPING WILL HAVE 12" MIN. COVER. ALL BACKFILL FOR PIPE TRENCHES SHALL BE CLEAN AND FREE OF FOREIGN DEBRIS AND SHARP OBJECTS; BACKFILLED TRENCHES SHALL BE PROPERLY COMPACTED. ALL MAIN LINES WILL BE INSTALLED A MIN. OF 3' FROM ANY TREE OR PALM.
14. IRRIGATION CONTRACTOR SHALL PROVIDED A RAIN-SWITCH AUTOMATIC SHUT-OFF DEVICE.
15. ALL GLUE JOINTS SHALL BE CLEANED, SANDED, AND TREATED WITH A COLORED HIGH ETCH PRIMER AND JOINED USING A SOLVENT CONFORMING WITH ASTM D2564.
16. AS-BUILT DRAWINGS SHALL BE PREPARED BY THE CONTRACTOR AND GIVEN TO THE OWNER PRIOR TO FINAL ACCEPTANCE.
17. IRRIGATION CONTACTOR SHALL INSTALL 4" POP-UPS FOR ALL LAWN AREA, 12" POP UPS FOR ALL SHRUB AREAS, 6" POP UPS FOR GROUND COVER, AND 12"RISERS FOR ALL HEDGE AREAS. IRRIG. CONTRACTOR SHALL COORDINATE WITH LANDSCAPE PLAN FOR CORRECT HEIGHTS AND HEAD PLACEMENT AND HEIGHT TO INSURE CLEARANCE AND PROPER COVERAGE FOR ALL AREAS.

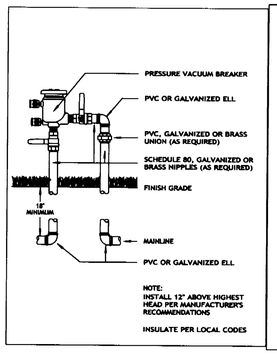

PRESSURE VACUUM BREAKER

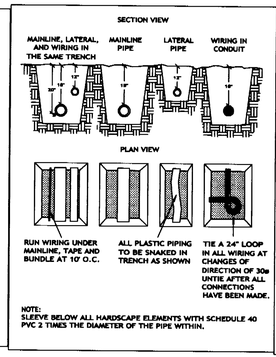

PIPE & WIRE TRENCHING

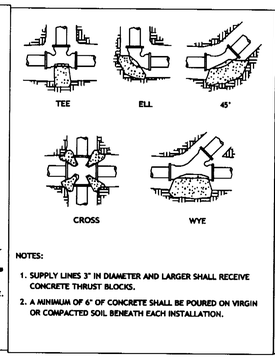

CONCRETE THRUST BLOCKS

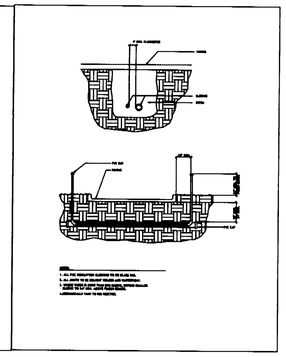

IRRIGATION SLEEVING

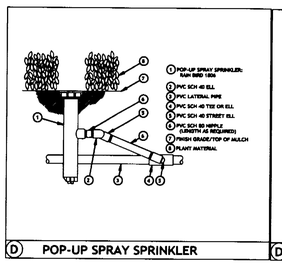

D POP-UP SPRAY SPRINKLER

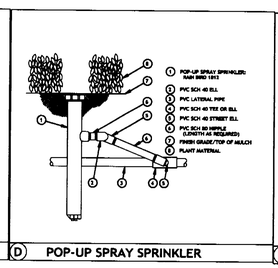

D POP-UP SPRAY SPRINKLER

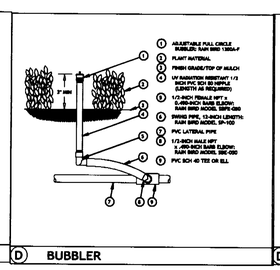

D BUBBLER

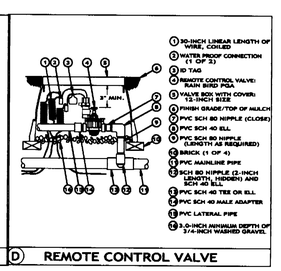

D REMOTE CONTROL VALVE

Irrigation

Qty	Symbol	Description	Part #	Pressure	Flow	Radius
2	⊙	Rain Bird 10-VAN 90 - 1804	10-VAN	30	0.75	10
2	⊙	Rain Bird 12-VAN 180 - 1804	12-VAN	30	1.3	12
14	⊙	Rain Bird 12-VAN 90 - 1804	12-VAN	30	0.65	12
4	◉	Rain Bird 15EST - 1804	15EST	30	0.61	15
13	▲	Rain Bird 15SST - 1804	15SST	30	1.21	30
14	⊙	Rain Bird 6-VAN 180 - 1804	6-VAN	30	0.6	6
2	⊙	Rain Bird 6-VAN 90 - 1804	6-VAN	30	0.37	6
1	Ⓜ	Watts Watts 009M2QT - 1"	009M2QT - 1"			
4	◔	Rain Bird 100-PGA Globe	100-PGA			
1	▲	Rain Bird ESP-4M	ESP-4M			
1	△	Hunter MINI-CLIK	MINI-CLIK			
1	M	3/4 inch meter				
60.84 (ft)	———	Schedule 40 1 1/4"				
523.9 (ft)	———	Schedule 40 1"				
309.43 (ft)	———	Schedule 40 3/4"				

DRAWN BY:
javier's Sprinklers inc
REVISIONS:

SEAL

3DESIGN INC
ANTHONY LEON
ARCHITECTURE
AR006652
4500 BISCAYNE BLVD SUITE#604 MIAMI, FL 33137 T.305.438.9377 F.305.438.9379

NEW BUILDING FOR
1529 JEFFERSON AVE
MIAMI BEACH, FL
33139

IR2

JUNE 6, 2006

STRUCTURE SCHEDULE

STRUCTURE NO.		STRUCTURE SIZE	RIM ELEVATION	INVERT ELEVATIONS (EXCL. RWL)	SUMP ELEVATION	BAFFLE SIZE
CB-1		5' X 5'	4.00	1.00	-1.00	N/A

RAINWATER LEADER LEGEND

A 6" RAIN WATER LEADER SLOPED @ 1/4"/FOOT
B 6" RAIN WATER LEADER SLOPED @ 1/2"/FOOT
C 8" RAIN WATER LEADER SLOPED @ 1/2"/FOOT

RAINWATER LEADERS SHALL BE PVC

CAMPANILE & ASSOCIATES, INC.

Louis R. Campanile

BY: LOUIS R. CAMPANILE
PRESIDENT
P.E. #10777
STATE OF FLORIDA

DISCIPLINE OF CIVIL ENGINEERING

THIS PLAN IS NOT VALID
UNLESS SEALED WITH AN
IMPRESSION SEAL

CAMPANILE & ASSOCIATES, INC.
ENGINEERS PLANNERS SURVEYORS
6420 S.W. 147th STREET
CORAL GABLES, FLORIDA 33158-1831
TEL: (305) 971-1988
FAX: (305) 971-1989
Project No. 4476

DRAWN BY:

REVISIONS:

3DESIGN INC
ANTHONY LEON
ARCHITECTURE
4300 BISCAYNE BLVD. SUITE#604 MIAMI, FL 33137 T.305.438.9377 F.305.438.9378

SEAL

NEW BLDG
FOR
1529 JEFFERSON AVE
MIAMI BEACH, FL
33139

PAVING & GRADING LEGEND

- 4.39 — EXISTING ELEVATION. SEE SURVEY FOR FOR MORE EXTENSIVE EXISTING TOPO
- (5.50) — PROPOSED ELEVATION DECIMAL POINT INDICATES LOCATION. UNLESS OTHERWISE SHOWN
- PROPOSED DRAINAGE FLOW DIRECTION
- PROPOSED DRAINAGE MANHOLE
- PROPOSED CATCH BASIN
- 2.5% — DIRECTIONAL WATER FLOW AND SLOPE
- ECB — EXISTING CATCH BASIN
- PROPOSED EXFILTRATION TRENCH
- H.F.F.E. — HIGHEST FINISHED FLOOR ELEVATION
- TS — TOP OF SIDEWALK
- TC — TOP OF CURB
- LF — LINEAR FEET
- BC — BOTTOM OF CURB
- GRADE BREAK LINE (TOP OR BOTTOM OF SLOPE)
- RWL — RAINWATER LEADER
- VG — VALLEY GUTTER
- CO — CLEAN-OUT
- P-1 — PERCOLATION TEST LOCATION
- SLOPE BACK TO MEET EXISTING/PROPOSED ELEVATION
- PROPOSED CONCRETE/CONCRETE PAVERS
- PL — PROPERTY LINE
- TOP — TOP OF RAINWATER LEADER PIPE ELEVATION

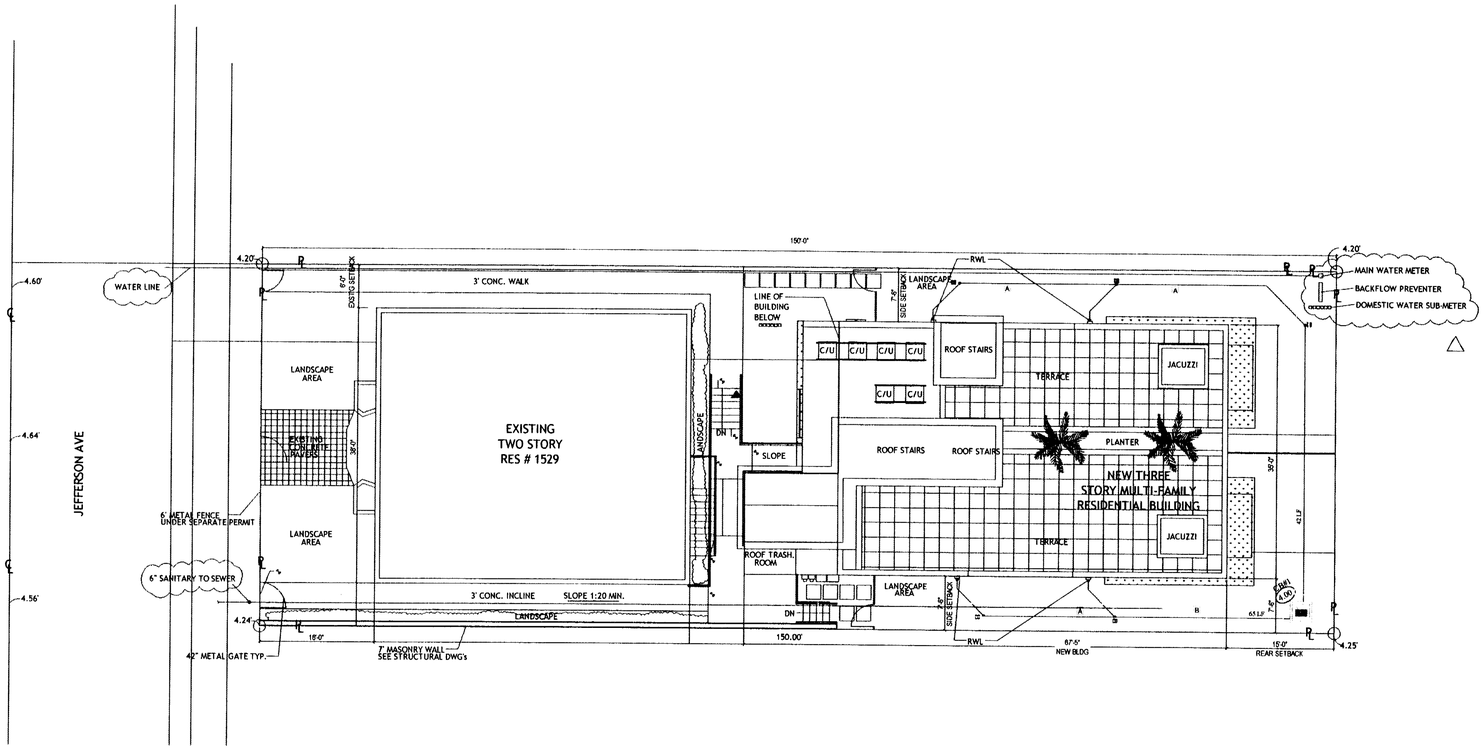

DRAINAGE AREA = 7500 SQUARE FEET
(0.172 ACRES)

DRAINAGE AREAS
SCALE: 1"=20'

PAVING, GRADING & DRAINAGE PLAN
SCALE: 1"=10'

C-1.0

AUGUST 25, 2006

Campanile & Associates, Inc.

1529 JEFFERSON AVENUE, MIAMI BEACH, FLORIDA

WATER QUALITY DRAINAGE CALCULATIONS

Total Drainage Area =	0.095	acres			
Impervious Area =	0.095	acres	(C =	0.9	)
Pervious Area =	0.000	acres	(C =	0.3	)
Lowest Grnd. Elev. for Prop. Exfil. Trench =	1.00	ft. NGVD.			
Lowest Existing Drain Elevation =	4.00	ft. NGVD.			

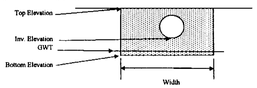

Proposed Exfiltration Trench:

Top Elevation =	3.00	ft. NGVD.
GWT =	2.00	ft. NGVD.
Pipe Diameter =	15	inches
Inv. Elevation =	1.00	ft. NGVD.
Bottom Elevation =	11.00	ft. NGVD.
Width =	5.00	feet.
Weir Elevation =	n/a	ft. NGVD.

Existing Exfiltration Trench:

Top Elevation =	n/a	ft. NGVD
GWT =	n/a	ft. NGVD
Pipe Diameter =	n/a	inches
Inv. Elevation =	n/a	ft. NGVD
Bottom Elevation =	n/a	ft. NGVD
Width =	n/a	feet.
Length =	n/a	feet.
Assumed Usage =	0	percent

Weighted k =	1.72E-04	cfs/sf/ft of head
Safety Factor =	2	
DESIGN STORM FREQUENCY (YEARS):	5	
MINIMUM TIME OF CONCENTRATION (MINUTES).	10.00	

BASIN DESIGN INFORMATION per DERM

TOTAL DRAINAGE AREA =	0.038	hectares or	0.095	acres
TOTAL IMPERVIOUS DRAINAGE AREA =	0.038	hectares or	0.095	acres
IMPERVIOUS RUNOFF COEFFICIENT =	0.90			
TOTAL PERVIOUS DRAINAGE AREA =	0.000	hectares or	0.000	acres
PERVIOUS RUNOFF COEFFICIENT =	0.30			
SUB-BASIN DRAINAGE AREA =	0.038	hectares or	0.095	acres.
SUB-BASIN IMPERVIOUS DRAINAGE AREA =	0.038	hectares or	0.095	acres
IMPERVIOUS RUNOFF COEFFICIENT =	0.90			
SUB-BASIN PERVIOUS DRAINAGE AREA =	0.000	hectares or	0.000	acres
PERVIOUS RUNOFF COEFFICIENT =	0.30			
SUB-BASIN TIME OF CONCENTRATION =	10.00	minutes		
DESIGN STORM FREQUENCY =	5	years		

WATER QUALITY CALCULATIONS per DERM Criteria

SUB-BASIN TIME OF CONCENTRATION =	10.00	minutes
SUB-BASIN TIME FOR FIRST INCH OF RUNOFF =	11.13	minutes

Campanile & Associates, Inc.

1529 JEFFERSON AVENUE, MIAMI BEACH, FLORIDA

REQUIRED WATER QUALITY TREATMENT TIME = 21.13 minutes

TREATMENT VOLUME REQUIRED:

Virmt =	15.686	cu. meters or	553.95	
Virmt =	0.002	hectare-meters or	554	cu. ft.
			0.01	ac.-ft.

TYPICAL EXFILTRATION TRENCH DESIGN per DERM

L = Volume / [k / SF x (2 x H2 x Du - Du^2 + 2 x H2 x Da) + (1.39 x 10^-4) x (W x Da + PS)]

Volume = Treatment Vol. - Capacity of Exist. Trench (ac-in)
k = Weighted Hyd. Conductivity (cfs/sf - ft)
H2 = Depth to the Water Table (ft)
W = Trench width (ft)
Du = Non Saturated Trench Depth (ft)
Da = Saturated Trench Depth (ft)
SF = Safety Factor
PS = Pipe Storage (ft ^3)

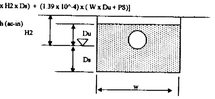

Capacity of Exist. Exfil. Trench =	0.000	ha-m or	0.000	ac.-ft
Treatment Volume =	0.002	ha-m or	0.01	ac.-ft.
Volume =	0.153	ac-in.		
k =	0.000172	cfs/sf-ft		
H2 =	2.40	ft.		
W =	4.00	ft.		
Du =	1.40	ft.		
Da =	12.60	ft.		
SF =	2.0			

L Required = 23.09 feet

PROVIDED LENGTH = 55 feet

MASS DIAGRAM

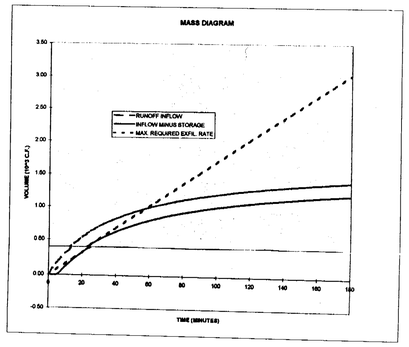

MAXIMUM OVERFLOW RATE = 0.00 CFS

STRUCTURE SCHEDULE

STRUCTURE NO.		STRUCTURE SIZE	RIM ELEVATION	INVERT ELEVATIONS (EXCL. RWL)	SUMP ELEVATION	BAFFLE SIZE
CB-1		5' X 5'	4.00	1.00	-1.00	N/A

TIME (MIN.)	CA	RAINFALL INTENSITY (IN/HR)	INFLOW RATE (CFS)	INFLOW VOLUME (FT^3)	EXIST. F.D CAPACITY (FT^3)	ADJUSTED INFLOW VOLUME (10^3 C.F.)	PROPOSED F.D STORAGE (FT^3)	EXCESS RUNOFF (10^3 C.F.)	REQUIRED EXFIL. RATE (CFS)	MAXIMUM REQUIRED EXFIL. VOLUME (10^3 C.F.)	ACTUAL EXFIL. VOLUME (10^3 C.F.)	OVERFLOW VOLUME (10^3 C.F.)	OVERFLOW RATE (CFS)
0	0.086	0.00	0.00	0.00	0.000	0.00	197.30	0.00	0.00	0.00	0.00	0.00	0.00
5	0.086	6.00	0.58	174.44	0.000	0.17	197.30	0.00	0.00	0.00	0.00	0.00	0.00
10	0.086	4.57	0.52	316.45	0.000	0.31	197.30	0.12	0.26	0.17	0.19	0.00	0.00
15	0.086	3.64	0.48	434.31	0.000	0.42	197.30	0.24	0.26	0.25	0.38	0.00	0.00
20	0.086	3.38	0.46	533.69	0.000	0.52	197.30	0.34	0.28	0.34	0.27	0.00	0.00
25	0.086	4.02	0.46	618.62	0.000	0.62	197.30	0.42	0.28	0.42	0.66	0.00	0.00
30	0.086	4.56	0.38	692.86	0.000	0.69	197.30	0.49	0.27	0.51	0.66	0.00	0.00
35	0.086	4.21	0.36	766.16	0.000	0.76	197.30	0.56	0.27	0.59	0.66	0.00	0.00
40	0.086	3.96	0.34	813.63	0.000	0.81	197.30	0.62	0.26	0.67	0.74	0.00	0.00
45	0.086	3.74	0.32	862.72	0.000	0.86	197.30	0.67	0.25	0.76	0.82	0.00	0.00
50	0.086	3.54	0.30	907.40	0.000	0.91	197.30	0.71	0.24	0.84	0.92	0.00	0.00
55	0.086	3.36	0.29	947.71	0.000	0.96	197.30	0.76	0.23	0.93	1.02	0.00	0.00
60	0.086	3.20	0.27	984.06	0.000	0.98	197.30	0.79	0.22	1.01	1.11	0.00	0.00
65	0.086	3.05	0.26	1017.07	0.000	1.02	197.30	0.82	0.21	1.10	1.20	0.00	0.00
70	0.086	2.92	0.25	1047.18	0.000	1.05	197.30	0.85	0.20	1.18	1.30	0.00	0.00
75	0.086	2.79	0.24	1074.74	0.000	1.07	197.30	0.88	0.19	1.26	1.39	0.00	0.00
80	0.086	2.68	0.23	1100.18	0.000	1.10	197.30	0.90	0.19	1.35	1.48	0.00	0.00
85	0.086	2.58	0.22	1123.45	0.000	1.12	197.30	0.92	0.18	1.43	1.57	0.00	0.00
90	0.086	2.48	0.21	1145.11	0.000	1.15	197.30	0.95	0.18	1.52	1.67	0.00	0.00
95	0.086	2.39	0.20	1165.19	0.000	1.17	197.30	0.97	0.17	1.60	1.76	0.00	0.00
100	0.086	2.31	0.20	1182.87	0.000	1.18	197.30	0.98	0.16	1.69	1.85	0.00	0.00
105	0.086	2.23	0.19	1201.29	0.000	1.20	197.30	1.00	0.16	1.77	1.94	0.00	0.00
110	0.086	2.16	0.18	1217.58	0.000	1.22	197.30	1.02	0.15	1.85	2.04	0.00	0.00
115	0.086	2.09	0.18	1232.84	0.000	1.22	197.30	1.04	0.15	1.94	2.13	0.00	0.00
120	0.086	2.02	0.17	1247.17	0.000	1.25	197.30	1.05	0.15	2.02	2.22	0.00	0.00
125	0.086	1.97	0.17	1260.66	0.000	1.26	197.30	1.06	0.14	2.11	2.31	0.00	0.00
130	0.086	1.91	0.16	1272.36	0.000	1.27	197.30	1.08	0.14	2.19	2.41	0.00	0.00
135	0.086	1.86	0.16	1285.36	0.000	1.29	197.30	1.09	0.13	2.28	2.50	0.00	0.00
140	0.086	1.81	0.15	1296.78	0.000	1.30	197.30	1.10	0.13	2.36	2.59	0.00	0.00
145	0.086	1.76	0.15	1307.45	0.000	1.31	197.30	1.11	0.13	2.44	2.68	0.00	0.00
150	0.086	1.73	0.15	1317.63	0.000	1.32	197.30	1.12	0.13	2.53	2.78	0.00	0.00
155	0.086	1.67	0.14	1327.31	0.000	1.33	197.30	1.13	0.12	2.61	2.87	0.00	0.00
160	0.086	1.63	0.14	1336.51	0.000	1.34	197.30	1.14	0.12	2.70	2.96	0.00	0.00
165	0.086	1.59	0.14	1345.27	0.000	1.35	197.30	1.15	0.12	2.78	3.05	0.00	0.00
170	0.086	1.55	0.13	1353.63	0.000	1.35	197.30	1.16	0.11	2.87	3.15	0.00	0.00
175	0.086	1.52	0.13	1361.59	0.000	1.36	197.30	1.16	0.11	2.95	3.24	0.00	0.00
180	0.086	1.48	0.13	1369.20	0.000	1.37	197.30	1.17	0.11	3.03	3.33	0.00	0.00

RAINWATER LEADER LEGEND

A 6" RAIN WATER LEADER SLOPED @ 1/4"/FOOT
B 6" RAIN WATER LEADER SLOPED @ 1/2"/FOOT
C 8" RAIN WATER LEADER SLOPED @ 1/2"/FOOT

RAINWATER LEADERS SHALL BE PVC

PAVING & GRADING LEGEND

5.89	EXISTING ELEVATION. SEE SURVEY FOR FOR MORE EXTENSIVE EXISTING TOPO
	PROPOSED ELEVATION.DECIMAL POINT INDICATES LOCATION. UNLESS OTHERWISE SHOWN
	PROPOSED DRAINAGE FLOW DIRECTION
	PROPOSED DRAINAGE MANHOLE
	PROPOSED CATCH BASIN
2.5%	DIRECTIONAL WATER FLOW AND SLOPE
ECB	EXISTING CATCH BASIN
17 LF	PROPOSED EXFILTRATION TRENCH
H.F.F.E.	HIGHEST FINISHED FLOOR ELEVATION
TS	TOP OF SIDEWALK
TC	TOP OF CURB
LF	LINEAR FEET
BC	BOTTOM OF CURB
	GRADE BREAK LINE (TOP OR BOTTOM OF SLOPE)
RWL	RAINWATER LEADER
VG	VALLEY GUTTER
CO	CLEAN-OUT
P-1	PERCOLATION TEST LOCATION
	SLOPE BACK TO MEET EXISTING/PROPOSED ELEVATION
	PROPOSED CONCRETE/CONCRETE PAVERS
PL	PROPERTY LINE
T.O.P	TOP OF RAINWATER LEADER PIPE ELEVATION

DRAINAGE AREA = 4138 SQUARE FEET
(0.095 ACRES)

DRAINAGE AREAS
NOT TO SCALE

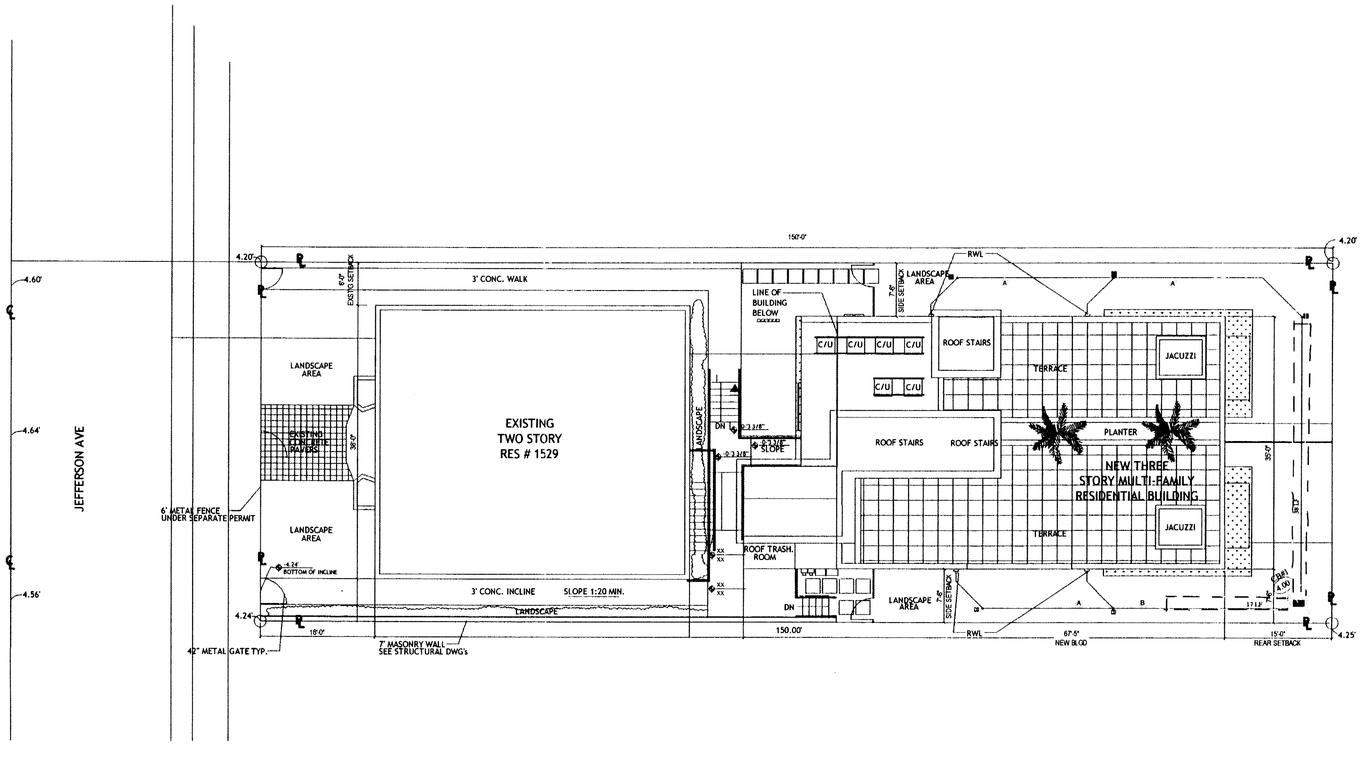

PAVING, GRADING & DRAINAGE PLAN

SCALE: 1"=10'

CAMPANILE & ASSOCIATES, INC.

BY: LOUIS R. CAMPANILE
PRESIDENT
P.E. #10777
STATE OF FLORIDA

DISCIPLINE OF CIVIL ENGINEERING

THIS PLAN IS NOT VALID UNLESS SEALED WITH AN IMPRESSION SEAL

CAMPANILE & ASSOCIATES, INC.
ENGINEERS PLANNERS SURVEYORS
6420 S.W. 147th STREET
CORAL GABLES, FLORIDA 33158-1831
TEL: (305) 971-1988
FAX: (305) 971-1989
Project No. 4476

DRAWN BY:

REVISIONS:

3DESIGN INC
ANTHONY LEON
ARCHITECT
4300 BISCAYNE BLVD. SUITE#G04 MIAMI, FL 33137 T.305.438.9377 F.305.438.9378

SEAL

NEW BLDG FOR
1529 JEFFERSON AVE
MIAMI BEACH, FL
33139

OFFICE COPY
MIAMI BEACH
FOR PERMITTING
N/A
JUN 12 2006
CITY OF MIAMI BEACH
ENGINEERING:
PUBLIC WORKS:
STRUCTURAL:
ACCESSIBILITY:

C-1.0

AUGUST 25, 2006

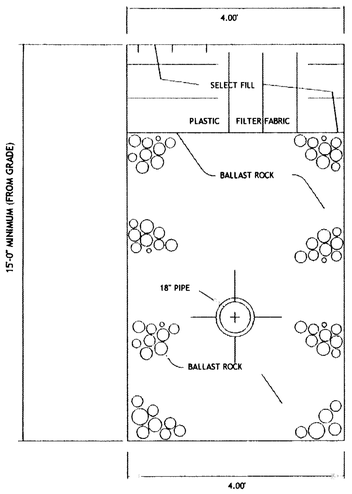

TRANSVERSE SECTION OF EXFILTRATION TRENCH

NOT TO SCALE

NOTES:

1. PLASTIC FILTER FABRIC AT EACH SIDE, TOP AND BOTTOM SHALL BE USED.
2. AFTER THE BALLAST ROCK HAS BEEN PLACED TO THE PROPER ELEVATION, IT SHALL BE CAREFULLY WASHED DOWN WITH CLEAN WATER IN ORDER TO ALLOW FOR INITIAL SETTLEMENT THAT MAY OCCUR. IF IT DOES TAKE PLACE, ADDITIONAL BALLAST ROCK WILL BE ADDED TO RESTORE THE BALLAST ROCK TO THE PROPER ELEVATION SO THAT THE EXFILTRATION TRENCH MAY BE COMPLETED IN ACCORDANCE WITH THE DETAILS.
3. IF NECESSARY, ADJUST ANGLE OF REPOSE SO AS TO ATTAIN EQUIVALENT TRENCH VOLUME.

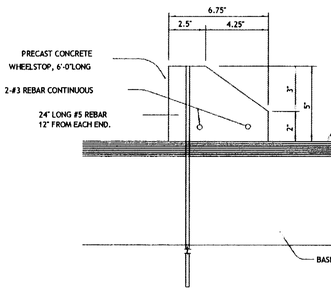

PRECAST CONCRETE WHEELSTOP

N.T.S.

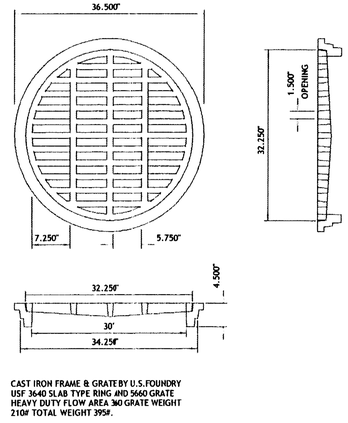

CAST IRON FRAME & GRATE BY U.S.FOUNDRY USF 3640 SLAB TYPE RING AND 5660 GRATE HEAVY DUTY FLOW AREA 3Ø GRATE WEIGHT 210# TOTAL WEIGHT 395#.

USE IN LANDSCAPED AREAS ONLY

CIRCULAR INLET FRAME & GRATE

N.T.S.

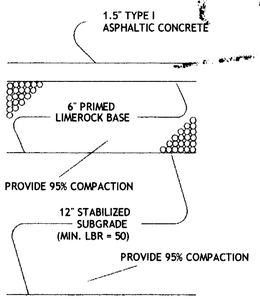

PAVEMENT SECTION

N.T.S.

ENGINEER'S NOTES :

1. BOUNDARY INFORMATION AND OTHER SURVEY BY CAMPANILE & ASSOCIATES, INC. DATED 8-23-2006. NO UNDERGROUND UTILITY INFORMATION WAS PROVIDED TO US.
2. ELEVATIONS ARE BASED UPON NATIONAL GEODETIC VERTICAL DATUM (N.G.V.D.).
3. DADE COUNTY FLOOD CRITERIA = ELEVATION = 5.0.
4. AVERAGE OCTOBER GROUND WATER LEVEL = 2.0 FEET, W.C. 2.2 MAP DATED 4-14-77.
5. AVERAGE YEARLY LOWEST GROUND WATER LEVEL = UNDEFINED, AS PER W.C. 2.3 MAP DATED 4-14-77.
6. ACCORDING TO THE NATIONAL FLOOD INSURANCE PROGRAM'S FLOOD INSURANCE RATE MAP, COMMUNITY No. 120651, PANEL NO. 0184, SUFFIX "J", DATED MARCH 2, 1994 THIS PROPERTY LIES IN FLOOD ZONE "AE", ELEVATION = 8 FEET.
7. THIS PROPERTY IS NOT LOCATED WITHIN A WELLFIELD CONE OF INFLUENCE (COI) BASED UPON THE WELLFIELD PROTECTION AREA MAP DATED JANUARY 6, 6, 1994.
8. ALL APPLICABLE CONSTRUCTION SHALL CONFORM TO DADE COUNTY PUBLIC WORKS (DCPW) DEPARTMENT'S STANDARDS AND SPECIFICATIONS, INCLUDING, BUT NOT LIMITED TO, PUBLIC WORKS MANUAL PART 1, "STANDARD DETAILS" AND PUBLIC WORKS MANUAL PART 2, "DESIGN AND CONSTRUCTION" UNLESS SHOWN OTHERWISE ON THESE PLANS. REFERENCES TO "SD_____" OR "R" ON THESE PLANS REFERS TO THE "STANDARD DETAILS".

ITEM	STANDARD DETAIL	LOCATION
EXFILTRATION TRENCH	SD 1.1	ALL (4' WIDE)
CATCH BASIN (AND DMH, IF NECESSARY)	SD 2.1	ALL

9. IF THE UNDERLYING GROUND CONTAINS UNSUITABLE MATERIAL (i.e. MARL, MUCK, PEAT, ETC.), THE PROPOSED PAVEMENT ELEVATION MUST HAVE A MINIMUM OF THREE (3) FOOT COVER OF ACCEPTABLE MATERIAL OVER THE UNDERLYING STRATA.
10. THE CONTRACTOR SHALL COORDINATE THIS WORK WITH OTHER CONTRACTORS AND/OR TRADES PERFORMING CONSTRUCTION ON, OR ADJACENT TO, THIS PROPERTY , IF ANY
11. THE CONTRACTOR SHALL PLACE SUBGRADE MATERIAL PRIOR TO INSTALLATION OF WATER AND SEWER MAINS, IF ANY.
12. THE CONTRACTOR SHALL FAMILIARIZE THEMSELF(S) WITH ACTUAL SITE CONDITIONS AFFECTING THIS WORK AND TO VERIFY LOCATIONS OF UNDERGROUND UTILITIES PRIOR TO SUBMITTING HIS BID. THE CONTRACTOR SHALL CONTACT THE UNDERGROUND UTILITIES NOTIFICATION CENTER FOR HELP IN LOCATING EXISTING FACILITIES, TELEPHONE 800-432-4770.
13. EXFILTRATION TRENCHES SHALL BE 4 FEET WIDE AND 15 FEET MINIMUM DEEP FROM FINISH GRADE. USE 15" PERFORATED POLY-PIPE. THE CONTRACTOR SHALL CALL FOR ENGINEERING INSPECTIONS WHEN THE TRENCHES ARE OPENED, BEFORE PLACING ANY MATERIAL IN TRENCHES. IN LIEU OF THIS AN AS-BUILT SURVEY PREPARED BY A FLORIDA PROFESSIONAL SURVEYOR AND MAPPER, CERTIFIED AS TO LOCATION, LENGTH, WIDTH AND BOTTOM ELEVATIONS (NGVD) OF EACH EXFILTRATION TRENCH SHALL BE FURNISHED BY THE CONTRACTOR PRIOR TO THE INSTALLATION OF SURFACE FINISHES . TRENCH AND INSTALLATIONS MUST BE INSPECTED AND APPROVED BY PERMITTER BEFORE PLACEMENT OF ANY MATERIALS AND AFTER PLACEMENT OF MATERIALS PRIOR TO BACKFILLING.
14. DRAINAGE MANHOLES MAY BE USED WHERE DEEMED TO BE NECESSARY AND ONLY WITH THE CONCURRENCE OF THIS ENGINEER.
15. EVERY EFFORT IS MADE BY THIS DESIGN TO AVOID EXISTING UTILITIES. IF EXISTING UTILITIES ARE ENCOUNTERED, THE EXCAVATION IN THOSE AREAS SHALL BE BY HAND AND SHALL BE REPORTED TO THE OWNER.
16. CONTRACTOR SHALL NOTIFY THE UNDERGROUND NOTIFICATION CENTER (SUNSHINE STATE ONE CALL) AT 1-800-432-4770 3 WORKING DAYS PRIOR TO EXCAVATIONS OF ANY SORT BEING PERFORMED.
17. FOR DETAILS PERTAINING TO THE CONSTRUCTION OF THE BUILDING, SEE ARCHITECT'S PLANS.
18. UNDERGROUND UTILITIES WERE NOT INVESTIGATED AND NO UNDERGROUND INFORMATION WAS MADE AVAILABLE TO US.
19. ALL GOVERNMENTAL APPROVALS MUST BE OBTAINED PRIOR TO BEGINNING WORK.
19. ALL WALKS SHALL HAVE BETWEEN 1% AND 2% SLOPE.

PAVING, GRADING & DRAINAGE DETAILS

SCALE: AS SHOWN

CAMPANILE & ASSOCIATES, INC.

BY: LOUIS R. CAMPANILE
PRESIDENT
P.E. #10777
STATE OF FLORIDA

DISCIPLINE OF CIVIL ENGINEERING

THIS PLAN IS NOT VALID UNLESS SEALED WITH AN IMPRESSION SEAL

CAMPANILE & ASSOCIATES, INC.
ENGINEERS PLANNERS SURVEYORS
6420 S.W. 147th STREET
CORAL GABLES, FLORIDA 33158-1831
TEL: (305) 971-1988
FAX: (305) 971-1989
Project No. 4476

DRAWN BY:

REVISIONS:

2D DESIGN INC
AA0002569
ARCHITECTURE
4300 BISCAYNE BOULEVARD, SUITE 404 MIAMI, FL 33137 T.305.438.9377 F.305.438.9379

SEAL

NEW BLDG.
FOR
1529 JEFFERSON AVENUE
MIAMI BEACH, FL
33139

n/a

JUN 12 2007

C-2

B0605708

2007-ALLOCATION-07092

Environmental Resources Management
Plan Review Services Division
701 NW 1st Court • 2nd Floor
Miami, Florida 33136-3902
T 305-372-6899 F 305-372-6631

miamidade.gov

MIAMI-DADE COUNTY

Carlos Alvarez, Mayor

ADA Coordination
Agenda Coordination
Animal Services
Art in Public Places
Audit and Management Services
Aviation
Building
Building Code Compliance
Business Development
Capital Improvements
Citizens' Independent Transportation Trust
Commission on Ethics and Public Trust
Communications
Community Action Agency
Community & Economic Development
Community Relations
Consumer Services
Corrections & Rehabilitation
Cultural Affairs
Elections
Emergency Management
Employee Relations
Empowerment Trust
Enterprise Technology Services
Environmental Resources Management
Fair Employment Practices
Finance
Fire Rescue
General Services Administration
Government Information Center
Historic Preservation
Homeless Trust
Housing Agency
Housing Finance Authority
Human Services
Independent Review Panel
International Trade Consortium
Juvenile Services
Medical Examiner
Metro-Miami Action Plan
Metropolitan Planning Organization
Park and Recreation
Planning and Zoning
Police
Procurement Management
Property Appraisal
Public Library System
Public Works
Safe Neighborhood Parks
Seaport
Solid Waste Management
Strategic Business Management
Team Metro
Transit
Task Force on Urban Economic Revitalization
Vizcaya Museum And Gardens
Water & Sewer

7/12/2007

Issued Date: 7/12/2007
Expiration Date: 10/10/2007

ITSANAK ANKONINA
1529 JEFFERSON AVE
MIAMI BEACH, FL

ITSNAK ANKONINA
1529 JEFFERSON LLC
1529 JEFFERSON AVE
MIAMI BEACH, FL

RE: Sewer System Treatment and Transmission Capacity Certification

The Miami-Dade County Department of Environmental Resources Management (DERM) has received your application for approval of a sewer service connection to serve the following project which is more specifically described in the attached project summary.

Project Name: 1529 HEFFERSON LLC/6 UNITS
Project Location: 1529 JEFFERSON AVE, MIAMI BEACH, FL 331393444
Previous Use: VACANT
Proposed Use: 6 LIVING UNITS
Previous Flow: 0 GPD
Total Calculated Flow: 1200 GPD
Allocated Flow: 1200 GPD
Sewer Utility: CITY OF MIAMI BEACH
Receiving Pump Station: 02 - 0001

DERM has evaluated your request in accordance with the terms and conditions set forth in Paragraph 16 C of the First Partial Consent Decree (CASE NO. 93-1109 CIV-MORENO) between the United States of America and Miami-Dade County. DERM hereby certifies that adequate treatment and transmission capacity, as herein defined, is available for the above described project.

Furthermore, be advised that this approval does not constitute Departmental approval for the proposed project. Additional reviews and approval may be required from sections having jurisdiction over specific aspects of this project. Also, be advised that the gallons per day (GPD) flow determination indicated herein are for sewer allocation purposes only (in compliance with Consent Decree requirements) and may not be representative of GPD flows used in calculating connection fees by the utility providing the service.

Please be aware that this certification is subject to the terms and conditions set forth in the Sewer Service Connection Affidavit filed by the applicant, a copy of which is hereby attached.

Should you have any questions regarding this matter, please contact the Miami-Dade Permitting and Inspecting Center (MDPIC) (786) 315-2800 or DERM Office of Plan Review Services, Downtown Office (305) 372-6899.

Sincerely,

Carlos Espinosa, P.E.
Director
Department of Environmental Resources Management

By: _____
Carlos L. Hernandez, P.E.
Chief, Office of Plan Review Services

B0605/08

MIAMI-DADE

Water & Sewer
P.O. Box 330316 • 3071 SW 38th Avenue
Miami, Florida 33233-0316
T 305-665-7471

miamidade.gov

ORDINANCE 89-95
COMPLIANCE FORM

ATLAS PAGE: N/A INV#: 03604 FORM #: 200714838 DATE: 9/19/2007

This form acknowledges compliance on the part of the following with the requirements in accordance with Miami-Dade County's Ordinance number 89-95.

Name of Owner: 1529 JEFFERSON LLC

Mailing:

Address: 1529 JEFFERSON AVE

City, State, Zip: MIAMI BEACH FL 33139-

Property Address: 1529 JEFFERSON AVE

Property Legal Description: LINCOLN SUB PB 9-69 UNDIV 1/4 INT IN LOT 17 BLK 62 1529 JEFFERSON AVE

Folio Number: 02-3234-002-1350

Proposed usage / No. of Units: 6 UNIT APT BLDG

REPLACES: Previous Usage / VAC LAND

Gallons per Day: 1,200

PREVIOUS FLOW:	0	PREVIOUS SQUARE FOOTAGE:	0	☑	NEW CONSTRUCTION
PROPOSED FLOW:	1,200	PROPOSED SQUARE FOOTAGE	3,900	☐	INTERIOR RENOVATION

Municipality:

Water Service Area: Miami Beach

Sewer Service Area: Miami Beach

Water Connection Charge: $1,668.00 Invoice No.: 03604

Sewer Connection Charge: $6,720.00

Total Connection Charge: $8,388.00

Comments: Subject to DERM Sewer Capacity Certification Letter Dated:

THIS FORM IS VALID ONLY WHEN ACCOMPANIED BY A STAMPED 'PAID' COPY OF INVOICE NO. 03604

Approved By: Richard Robinson - New Business Rep

CONTACT NAME: LISA VASQUEZ
CONTACT PHONE (305) 318-3310

Printed On: 9/19/2007 2:36:01 PM

NB: Richard Robinson
PR:

CITY OF MIAMI BEACH
Building Department
1700 Convention Ctr Drive, 2nd Floor
Miami Beach, Florida 33139
Inspections: (305) 673-7370 Office: (305) 673-7610

Building Work Permit

10-10-2007

Activity Number: B0605108

Status: APPROVED Issued By: BUILGARC

Site Address: 1529 JEFFERSON AV MBCH
Parcel #: 32340021350

Applied: 07/07/2006
Approved: 10/10/2007
Completed:
To Expire: 04/07/2008

Valuation: $5,950.00

Applicant: JM GENERAL CONTRACTORS INC
5780 NW 113TH PLACE
MIAMI 33178
786-319-0733

Property Owner: 1529 JEFFERSON AVE LLC
201 S BISCAYNE BLVD #850
MIAMI FL 33131

Description: NEW 3 STORY BUILDING, 3 FLOORS, 6 UNITS, 5
Inspector Area: S Class Code: R2

DETAIL LIST

Alteration/Repair Fees		
Alteration Bulding/Structures - Per Costs:	$0.00	$0.00
Awning, Canopy, Patio Cover - Per Costs:	$0.00	$0.00
Area Under Roof - RADON - Per Sq.Ft.:	5950	$59.50
Walk-Thru - Per Valuation:	$0.00	$15.00
Repairs to Building/Structure - Per Costs:	$0.00	$0.00
Roofing or Re-roofing - Per Sq.Ft.:	0	$0.00
Window/Doors - Per # of:	0	$0.00
Signs 36-4 (Writer/Erect) - Per Sq.Ft.:	0	$0.00
Fence and/or Wall - Per Linear Feet:	0	$0.00
Partial Demo (Struct, Sign, Wall) - Per Costs:	$0.00	$0.00
Swimming Pool - Per Gallon:	0	$0.00
Painting - Per Costs:	$0.00	$0.00
Sandblasting - Per Costs:	$0.00	$0.00
Paving - Per Sq.Ft.:	0	$0.00
Concrete Slab - No Paving - Per Sq.Ft.:	0	$0.00
Trees - Per # of:	0	
Hedges - Per Linear Feet:	0	
Groundcover - Per Sq.Ft.:	0	
Landscaping Fee:		$0.00
Other Fees:		$0.00
Penalty Fee (If Applicable):		$0.00

A II
OCT 10 2007
CITY OF MIAMI BEACH
BUILDING DEPARTMENT

[BSBLDPRM]

Activity Number: B0605108

Fire Safety Fees		
New Building or Addition - Per Sq.Ft.:	0	$0.00
Storage/Industrial Bldg - E & F Occup - Per Sq.Ft.:	0	$0.00
Greenhouse/Argiculture on Premises - Per Sq.Ft.:	0	$0.00
Screen Enclsoure/Trail on Premises - Per Sq.Ft.:	0	$0.00
SS Underground Tanks/App Shelter - Per #:	0	$0.00
Construction not shown Above - Per Costs:	$0.00	$0.00
Alt/Repair Building/Structure - Per Costs:	$0.00	$0.00
Marine Structure Fee		
Dock Area - Per Sq.Ft.:	0	$0.00
Seawall - Per Linear Feet:	0	$0.00
Boat Lifts, Davits, Hoist - Per # of:	0	$0.00
Batter, Mooring, Dock Piles - Per # of:	0	$0.00
Marine Structure Alt/Repair - Per Costs:	$0.00	$0.00
SFBC Compliance Surcharge		
New Const/Add - Res/Mult-Fam/Comm - Per Sq.Ft.:	0	$0.00
New Const/Add - Strg/Ind/Msc - Per Sq.Ft.:	0	$0.00
Cost for Other Construction:		$0.00
Training Fee		
Training Fee:		$119.00
Sanitation Fee:		$20.00
Additional Fees		
1st Reinspection:		$0.00
Continued Reinspections - Per # of:	0	$0.00
Building Joint Inspections - Per # of:	0	$0.00
Change of Contractor Per # of:	0	$0.00
Permit Extension - Per # of:	0	$0.00
Residential Card:		
Commercial Card:		
Permit Card Replacements:		$0.00
Lost Plan Fee - SF:		$0.00
Lost Plan Fee - Other:		$0.00
Overtime Inspection Fees:		$0.00
Total of All Fees:		$2,006.20
Total of Payments:		$2,006.20
Balance Due:		$0.00

CITY OF MIAMI BEACH
BUILDING DEPARTMENT
1700 CONVENTION CENTER DR
MIAMI BEACH, FL 33139

305-673-7610 OFFICE | 305-673-7857 FAX

WORK PERMIT APPLICATION

(PLEASE FILL OUT COMPLETELY)

B060-5108

DATE: / / CODE IN EFFECT: **FLORIDA BUILDING CODE**

IF SUBSIDIARY OR REVISION PROVIDE THE MASTER BUILDING PERMIT NUMBER HERE: B

LOCATION OF IMPROVEMENTS		CONTRACTOR INFORMATION	
JOB ADDRESS:	1529 JEFFERSON AVE	LICENSE #:	CGC 1508889
FOLIO NUMBER:		SS #	769-20-3112
LOT:	17	COMPANY:	JH GENERAL CONTRACTORS, INC.
BLOCK:	62	QUALIFIER:	AVEJANDRO JIMENEZ
SUBDIVISION:	LINCOLN	ADDRESS:	8341 NW 66th Street
P. B. PAGE:	P.B. 9 PG 69	CITY/STATE/ZIP:	MIAMI, FL. 33166
YEAR BUILT:	1936	PHONE #:	786 319 0733

TYPE OF IMPROVEMENTS

DESCRIPTION OF WORK: NEW STORY BUILDING

VALUE OF WORK: $650,000 NO BLDGS.: 1 NO OF UNITS: 6 NO OF FLOORS: 3

SQUARE FEET: 5,950 LINEAL FEET: N/A POOL GALLONAGE: N/A

(X) NEW CONSTRUCTION ON VACANT LAND	( ) FOUNDATION ONLY	( ) SHELL ONLY	( ) SIGNS
( ) ALTERATION INTERIOR	( ) ENCLOSURE	( ) ADDITION ATTACHED	( ) SWIMMING POOL/SPA
( ) ALTERATION EXTERIOR	( ) REPAIR	( ) ADDITION DETACHED	( ) HURRICANE SHUTTERS
( ) STRUCTURE RELOCATION	( ) REPAIR DUE TO FIRE	( ) AWNING/CANOPIES	( ) WINDOWS/SLIDING DOORS
	( ) DEMOLISH	( ) FENCING	

ROOFING

( ) (92) LOW SLOPE APPLICATION (GRAVEL, SMOOTH MODIFIED, SINGLE PLY)	SQUARE FEET
( ) (95) SHINGLES (ASPHALT, FIBERGLASS)	( ) SINGLE FAMILY
( ) (96) SHINGLES (METAL ROOFS/WOOD SHINGLES & SHAKE)	( ) MULTI-FAMILY
( ) (0107) TILE ROOF	( ) COMMERCIAL
( ) LIGHT WEIGHT	

PERMIT TYPE

( ) BUILDING ( ) MECHANICAL
( ) ELECTRICAL ( ) PLUMBING
( ) FIRE

CHANGE TO EXISTING

( ) CHANGE CONTRACTOR ( ) PERMIT UPGRADE
( ) REVISIONS ( ) SUPPLEMENTAL

OWNER'S INFORMATION		MORTGAGE LENDER'S INFORMATION	
NAME:	ANCHOR ANKONINA	NAME:	
ADDRESS:	7581 Lake Ave	ADDRESS:	
CITY/STATE/ZIP:	Miami Bch, Fl	CITY/STATE/ZIP:	
PHONE NUMBER:	305-673-2473	PHONE NUMBER:	

ARCHITECT'S INFORMATION		ENGINEER'S INFORMATION	
NAME:	ANTHONY LEON	NAME:	SAM LYUBKIN P.E.
ADDRESS:	4300 BISCAYNE BLVD G4	ADDRESS:	2632 HOLLYWOOD BLVD
CITY/STATE/ZIP:	MIAMI FL 33137	CITY/STATE/ZIP:	Hollywood FL 33020
PHONE NUMBER:	305.438.9377	PHONE NUMBER:	1.954.922.8845
LICENSE #	AR 000 16752	LICENSE#	34306

3 # Units 5 # Parking Spaces
1 Heap Space

CITY OF MIAMI BEACH
BUILDING DEPARTMENT
1700 CONVENTION CENTER DR
MIAMI BEACH, FL 33139

305-673-7610 OFFICE

305-673-7857 FAX

OCCUPANCY CLASSIFICATIONS

ASSEMBLY OCC. - GROUP **A1** GREATER THAN 1,000	_____	INSTITUTIONAL OCC. - GROUP **I** UNRESTRICTED	_____
ASSEMBLY OCC. - GROUP **A2** 50 TO 1,000	_____	INSTITUTIONAL OCC. - GROUP **I** RESTRICTED	_____
BUSINESS OCC. - GROUP **B**	_____	MERCANTILE OCC. - GROUP **M**	_____
DAY CARE OCC. - GROUP **D**	_____	RESIDENTIAL OCC. - GROUP **R1** HOTEL/MOTEL	_____
EDUCATIONAL OCC. - GROUP **E**	_____	RESIDENTIAL OCC. - GROUP **R2** APTS/CONDO	_____
FACTORY OCC. - GROUP **F**	_____	RESIDENTIAL OCC. - GROUP **R3** S/F	_____
HAZARDOUS OCC. - GROUP **H1** EXPLOSIVE	_____	RESIDENTIAL OCC. - GROUP **R4** CARE FACILITIES	_____
HAZARDOUS OCC. - GROUP **H2** BURNING	_____	STORAGE OCC. - GROUP **S1** ORDINARY HAZARD	_____
HAZARDOUS OCC. - GROUP **H3** PHYSICAL	_____	STORAGE OCC. - GROUP **S2** LOW HAZARD	_____
HAZARDOUS OCC. - GROUP **H4** HEALTH	_____		

Application is hereby made to obtain a permit to do work and installation as indicated. I certify that all work will be performed to meet the standards of all laws regulation construction in this jurisdiction. I understand that **SEPARATE PERMITS ARE REQUIRED** for ***Electrical, Mechanical, Plumbing, Signs, Swimming Pools and Spas, Windows and Sliding Glass Doors and Roofing, and Fire Protection Systems***. As per Florida Building Code 104.4.1.4:

NOTICE: In addition to the requirements of this permit, there may be additional restrictions applicable to this property that may be found in the public records of this county, and there may be additional permits required from other governmental entities such as water management districts, state agencies or federal agencies.

_____

SIGNATURE OF QUALIFIER ONLY

STATE OF FLORIDA **COUNTY OF DADE**

Sworn to and subscribed before me this _____ day of _____, 20__, By:

ALEJANDRO R. JIMENEZ.

PLEASE PRINT QUALIFIER'S NAME

(/) Personally Known to me. ( ) Procured Identification:

Type of Identification: _____

( ) DID TAKE OATH. ( ) DID NOT TAKE OATH

L.R. COHEN
MY COMMISSION #DD546044
EXPIRES: APR 27, 2010
Bonded by 1st State Insurance

_____

Signature of Notary Public

DATE: _____

OWNER'S AFFIDAVIT

ATTENTION: BUILDING OFFICIAL

I, ITSHAK ANKONINA certify that I am the owner of the property described as:

ADDRESS: 1529 JEFFERSON AVE

LOT: 17 BLOCK: 62 SUBDIVISION: LINCOLN

I authorize JM GENERAL as my agent to obtain a building permit for the following work:

NEW CONSTRUCTION - CONDO BUILDING

OWNER'S SIGNATURE OR OWNER AGENT'S SIGNATURE

STATE OF FLORIDA **COUNTY OF DADE**

Sworn to and subscribed before me this _____ day of _____ 2 0__, by:

ITSHAK ANKONINA

PLEASE PRINT OWNER'S NAME OR OWNER AGENT'S NAME

( ) Personally Known to me. ( ) Produced Identification

Type of Identification: DL# of Israel

( ) DID TAKE OATH ( ) DID NOT TAKE OATH

L Cohen

SIGNATURE OF NOTARY PUBLIC

L.R. COHEN
MY COMMISSION #DD546044
EXPIRES: APR 27, 2010
Bonded by 1st State Insurance

Notice of Commencement must be filed if the job valuation of $ 2,500.00 and/or more in labor and material

Notice of Commencement must be posted prior to the job commencing.

Notice of Commencement should be filed at:
22 NW 1st Street, Miami, Florida

NOC
MISSING:
NOTARY!

NOTICE OF COMMENCEMENT

Notice of Commencement must be filed if the job valuation of $ 2,500.00 and/or more in labor and material.
Please file at 22 NW 1st Street, 1st Floor, Miami, Florida (305) 275-1155

Permit Number: _____ **Tax Folio Number:** _____

State of Florida **County of Dade**

The undersigned hereby gives notice that improvements will be made to certain real property, and in accordance with Chapter 713, Florida Statute, the following information is provided in this Notice of Commencement.

Legal description of property and street address: LOT 17 Block 62 LINCOLN SUB
1529 JEFFERSON AVE MIAMI BEACH FL 33139

Description of improvement: NEW 3 STORY Bldg W/ 6 UNITS.

Owner(s) name and address: _____

Interest in property: _____

Name and address of fee simple titleholder: _____

Contractor's name and address: _____

Surety: (Payment bond required by owner from contractor if any)

Name and address: _____

Amount of Bond: $ _____

Lender's name and address: _____

Persons with the State of Florida designed by Owner upon whom notices or other documents may be served as provided by Section 713.13(1)(a)7., Florida Statute:
Name and address: _____

In addition to himself/herself, Owner designates the following permit(s) to receive a copy of a Lienor's Notice as provided in Section 713.13(1)(b), Florida Statute:
Name and address: _____

Expiration date of Notice of Commencement: (the expirations date is one (1) year from the date of recording unless a different date is specified) _____

_____ **(Signature of Owner)**

Print Owner's Name: _____
Sworn to and subscribed before me this _____ day of _____, 20__.
_____ Personally Known, or
_____ Produced Identification
_____ Oath taken _____ Oath not taken

Prepared by: _____
Address: _____
_____
Notary Public: _____
Print Notary's Name: _____
Commission Expires: _____

FLORIDA DEPARTMENT OF STATE
DIVISION OF CORPORATIONS

Detail by Entity Name

Florida Limited Liability Company

1529 JEFFERSON AVENUE LLC.

Filing Information

Document Number	L05000102223
FEI Number	861152928
Date Filed	10/18/2005
State	FL
Status	ACTIVE
Effective Date	10/17/2005

Principal Address

201 S. BISCAYNE BLVD.
850
MIAMI FL 33131 US

Mailing Address

201 S. BISCAYNE BLVD.
850
MIAMI FL 33131 US

Registered Agent Name & Address

ROSSZ FIU CORPORATION
201 S. BISCAYNE BLVD.
850
MIAMI FL 33131 US

Manager/Member Detail

Name & Address

Title MGR

ITSHAK, ANKONINA
45 KAPLAN STREET
HERTZELIYA-PITUAH IL 46660 IL

Annual Reports

Report Year Filed Date

2006	01/13/2006
2007	07/04/2007

Document Images

07/04/2007 -- ANNUAL REPORT

01/13/2006 -- ANNUAL REPORT

10/18/2005 -- Florida Limited Liability

Note: This is not official record. See documents if question or conflict.

Home Contact us Document Searches E-Filing Services Forms Help
Copyright and Privacy Policies
Copyright © 2007 State of Florida, Department of State.

CITY OF MIAMI BEACH
Building Department
1700 Convention Ctr Drive, 2nd Floor
Miami Beach, Florida 33139
Inspections: (305) 673-7370
Office: (305) 673-7610

B0605108 CANCEL

Building Work Permit

06-27-2013

Activity Number: B0605108

Status: CLOSED

Issued By: BUILGARC

Site Address: 1529 JEFFERSON AV MBCH
Parcel #: 32340021350

Applied: 07/07/2006
Approved: 10/10/2007
Completed:
To Expire: 04/07/2008

Valuation: $5,950.00

Applicant: JM GENERAL CONTRACTORS INC
5780 NW 113TH PLACE
MIAMI 33178
786-319-0733

Property Owner: 1529 JEFFERSON AVE LLC
201 S BISCAYNE BLVD #850
MIAMI FL 33131

Description: NEW 3 STORY BUILDING, 3 FLOORS, 6 UNITS, 5
Inspector Area: S Class Code: R2

PAID
JUN 27 2013
CITY OF MIAMI BEACH
BUILDING DEPARTMENT

DETAIL LIST

Alteration/Repair Fees		
Alteration Bulding/Structures - Per Costs:	$0.00	$0.00
Awning, Canopy, Patio Cover - Per Costs:	$0.00	$0.00
Area Under Roof - RADON - Per Sq.Ft.:	5950	$59.50
Walk-Thru - Per Valuation:	$0.00	$15.00
Repairs to Building/Structure - Per Costs:	$0.00	$0.00
Roofing or Re-roofing - Per Sq.Ft.:	0	$0.00
Window/Doors - Per # of:	0	$0.00
Signs 36-4 (Writer/Erect) - Per Sq.Ft.:	0	$0.00
Fence and/or Wall - Per Linear Feet:	0	$0.00
Partial Demo (Struct, Sign, Wall) - Per Costs:	$0.00	$0.00
Swimming Pool - Per Gallon:	0	$0.00
Painting - Per Costs:	$0.00	$0.00
Sandblasting - Per Costs:	$0.00	$0.00
Paving - Per Sq.Ft.:	0	$0.00
Concrete Slab - No Paving - Per Sq.Ft.:	0	$0.00
Trees - Per # of:	0	
Hedges - Per Linear Feet:	0	
Groundcover - Per Sq.Ft.:	0	
Landscaping Fee:		$0.00
Other Fees:		$0.00
Penalty Fee (If Applicable):		$0.00

Activity Number: B0605108

Fire Safety Fees		
New Building or Addition - Per Sq.Ft.:	0	$0.00
Storage/Industrial Bldg - E & F Occup - Per Sq.Ft.:	0	$0.00
Greenhouse/Argiculture on Premises - Per Sq.Ft.:	0	$0.00
Screen Enclsoure/Trail on Premises - Per Sq.Ft.:	0	$0.00
SS Underground Tanks/App Shelter - Per #:	0	$0.00
Construction not shown Above - Per Costs:	$0.00	$0.00
Alt/Repair Building/Structure - Per Costs:	$0.00	$0.00
Marine Structure Fee		
Dock Area - Per Sq.Ft.:	0	$0.00
Seawall - Per Linear Feet:	0	$0.00
Boat Lifts, Davits, Hoist - Per # of:	0	$0.00
Batter, Mooring, Dock Piles - Per # of:	0	$0.00
Marine Structure Alt/Repair - Per Costs:	$0.00	$0.00
SFBC Compliance Surcharge		
New Const/Add - Res/Mult-Fam/Comm - Per Sq.Ft.:	0	$0.00
New Const/Add - Strg/Ind/Msc - Per Sq.Ft.:	0	$0.00
Cost for Other Construction:		$0.00
Training Fee		
Training Fee:		$119.00
Sanitation Fee:		$20.00
Additional Fees		
1st Reinspection:		$0.00
Continued Reinspections - Per # of:	0	$0.00
Building Joint Inspections - Per # of:	0	$0.00
Change of Contractor Per # of:	0	$0.00
Permit Extension - Per # of:	0	$0.00
Residential Card:		
Commercial Card:		
Permit Card Replacements:		$0.00
Lost Plan Fee - SF:		$0.00
Lost Plan Fee - Other:		$0.00
Overtime Inspection Fees:		$0.00
Total of All Fees:		$2,109.90
Total of Payments:		$2,109.90
Balance Due:		$0.00

MIAMIBEACH

Building Department
1700 Convention Center Drive, 2nd FL
Miami Beach, Florida 33139
305.673.7610 Fax: 305.673.7012

Permit Cancellation Request

Date	Permit/Process Number
06/06/2013	B0605108
Contractor Name	**Contact Name**
JM GENERAL CONTRACTORS, INC	ALEJANDRO JIMENEZ
Job Address	**Apartment/Unit Number**
1529 JEFFERSON AVE. MIAMI BEACH, FL	
Telephone Number	**E-Mail Address**
786-319-0733	alejandro_jimenez5@hotmail.com

A Permit Cancellation Request may be submitted if no work has taken place. If work has taken place a Change of Contractor must be submitted.

WARNING: If the work has taken place and the permit is cancelled, you will be in violation of section 109.4 of the Florida Building Code, *failure to obtain a permit* and will be subject to a penalty of 100 percent of the usual permit fee in addition to the required permit fees.

☐ Owner

Print Owner's Name _____ Owner's Signature _____

STATE OF FLORIDA , COUNTY OF MIAMI-DADE

Sworn to and subscribed before me this _____ day of _____ 20 ____, by _____

☐ Personally
☐ Produced Identification – Type of Identification _____

Signature of Notary Public _____ (SEAL)

☒ Contractor

Print Qualifier's Name: ALEJANDRO JIMENEZ. Qualifier's Signature: [signature]

STATE OF FLORIDA , COUNTY OF MIAMI-DADE

Sworn to and subscribed before me this 10th day of June 20 13, by Alejandro Jiménez

☒ Personally
☐ Produced Identification – Type of Identification _____

Signature of Notary Public: [signature] (SEAL)

NOTARY PUBLIC STATE OF FLORIDA
L R COHEN
COMMISSION No. EE108885
EXPIRES 7/05/2015

Office Use Only

Date of Receipt:	Permit Cancelled ☐ Yes ☐ No

1 – Cancellation PC 1 (Optional)

Ok To Cancel
6/27/13

ADA Information

To request this material in accessible format, sign language interpreters, information on access for persons with disabilities, and/or any accommodation to review any document or participate in any city-sponsored proceeding, please contact 305.604.2489 (voice), 305.673.7524 (fax) or 305.673.7218 (TTY) five (5) days in advance to initiate your request. TYY users may also call 711 (Florida Relay Service).

City of Miami Beach Mission

We are committed to providing excellent public service and safety to all who live, work and play in our vibrant, tropical, historic community.

Excellence Miami Beach

Form Name	Permit Cancellation Request
Form Purpose	This form is completed if an owner or permit holder would like to request the cancellation of a permit.
Related Forms	Permit Refund Request [A refund may be requested if the following four (4) conditions are met: (1) No work was performed under the permit; (2) The permit is valid; (3) The permit has not been revoked; and (4) The refund exceeds $100.00]
Associated Fees	Minimum Permit Fee
Additional Info	If the work has taken place, you will be in violation of section 109.4 of the Florida Building Code, Work commencing before permit issuance.
Form Process	
For Assistance	Please contact: 1. **In – person**: Building Department, Miami Beach City Hall, 1700 Convention Center Drive, Miami Beach, Florida 33139 2. **Via Telephone**: 305-673-7610 3. **Via E-mail**: buildingdepartment@miamibeachfl.gov 4. **Online:** www.miamibeachfl.gov

Building Department Mission

We are dedicated to serving the public by the efficient and effective supervision of construction, business, professional and personal activities to safeguard the public health, safety and general welfare of the City's residents and visitors by enforcing the Florida Building Code and the City Code of Ordinances.

CITY OF MIAMI BEACH
BUILDING DEPARTMENT

COMMENTS LIST

10-29-2009

Activity Number: **BV05001590**

Site Address: **1529 JEFFERSON AV MBCH**

BUILPERH 09/14/2005 Case Created by BUILPERH (added by script)
BUILPERH 09/14/2005 Inspector changed from BUILPERH to BUILPERH (added by script)
BUILPERH 09/14/2005 Initial Inspector: Herminia Perez (added by script)
BUILPERH 09/14/2005 Violation was issued and will be posted. Failure to comply with the required Building Re-certification.

BUILPERH 10/05/2005 Compliance changed from 10/25/2005 to 11/15/2005 (added by script)
BUILPERH 10/05/2005 Violation posted 10/04/05. Must comply by 11/15/05.
BUILAMAR 10/13/2005 RECIEVED PAPER WORK FOR NEW VIOLAITON AND CREATED FILE ON 10/13/2005\RA
BUILPERH 11/22/2005 Non-compliance. Prepare for Special Master.
BUILAMAR 12/07/2005 RECIEVED REQUEST TO SEND TO SMA AND PREPARED ON 12/07/2005\RA
BUILPERH 12/12/2005 We received the Structural and Electrical report for the Building located at 1529 JEFFERSON
AV, as per Donald Shackelford, the Building cannot be recertified needs structural and electrical repairs. Non-Compliance.
BUILPERH 03/30/2006 New owner as of 12/2005. Itshak Ankonina 201 S Biscayne Blvd. Suite 850 Miami, Fl. 33131
Son Michael Benhamou 786-333-2300
BUILPERH 04/06/2006 No permit have been pulled, Structural and Electrical repairs needed. Owner Must applied for
permits. JB06000113.
BUILPERH 04/07/2006 04/06/2006.....Special Masters Hearing. Must submit progress report by June 6, 2006.
BUILPERH 07/20/2006 B0605085 permit applied status. Description: Remodeling to include: bathroom tiles, fixtures,
replace plumbing, electrical panels, remove partition/20 impact windows and (4) doors, interior doors, new tile flooring and electrical fixstures, railings & rear stairs.
B0605108 permit applied status. Description: NEW 3 STORY BUILDING, 3 FLOORS, 6 UNITS, 5 PARKING SPACES, 1 HANDICAP
PARKING SPACE.
Progress report must be submit progress. JB06000113.
BUILPERH 10/05/2006 B0605085 permit applied status. Description: Remodeling to include: bathroom tiles, fixtures,
replace plumbing, electrical panels, remove partition/20 impact windows and (4) doors, interior doors, new tile flooring and electrical fixstures, railings & rear stairs.
B0605108 permit applied status. Description: NEW 3 STORY BUILDING, 3 FLOORS, 6 UNITS, 5 PARKING SPACES, 1 HANDICAP
PARKING SPACE.
Progress report must be submit progress. JB06000113.
BUILPERH 10/12/2006 10/05/06..... Must submit progress report on 12/07/2006.
BUILPERH 12/07/2006 Must submit progress report. JB06000113.
B0605085 permit applied status. Description: Remodeling to include: bathroom tiles, fixtures, replace plumbing,

CITY OF MIAMI BEACH
BUILDING DEPARTMENT

COMMENTS LIST

10-29-2009

Activity Number: **BV05001590**

Site Address: **1529 JEFFERSON AV MBCH**

---

electrical panels, remove partition/20 impact windows and (4) doors, interior doors, new tile flooring and electrical fixstures, railings & rear stairs.
B0605108 permit applied status. Description: NEW 3 STORY BUILDING, 3 FLOORS, 6 UNITS, 5 PARKING SPACES, 1 HANDICAP
PARKING SPACE.
Both permits are in applied status.

BUILPERH 12/12/2006 Hearing date 12/07/2006.....Progress report by March 20, 2007. Compliance date was set
for
August 7, 2007.
BUILARNR 03/23/2007 As per SM Full Compliance by August 7, 2007. or fines. $250.00 per day shall begin running.
BUILARNR 08/08/2007 Non compliance, start running fines of $250.00 fines per day as of 08/07/07.
BUILAMAR 08/13/2007 Status chged to TO COURT (added by script)
BUILAMAR 08/13/2007 AFFIDAVIT OF NON COMPLIANCE PRINTED OUT ON 08/07/2007\RA
BUILARNR 06/17/2008 As per SM violator shall get new permits by June 17, 2008. or fines. $250.00 per day shall
begin running.
BUILARNR 06/20/2008 Non compliance, start running fines of $250.00 fines per day as of 06/17/07.
BUILARNR 11/05/2008 As per SM there shall be full compliance by 11/03/08, or fines of $150.00 per day shall begin
running.

BUILARNR 11/05/2008 NON COMPLIANCE. START RUNNING FINES OF $150.00 PER DAY AS OF 11/03/08.

BUILAVAA 11/12/2008 AFF OF NON COMP. PRONTED OUT / AB
BUILARNR 06/02/2009 We received a report from Donald Shackelford, the building cannot be recertified at this
time, pending remediation of defects identified on the report, but is structurally stable.
BUILARNR 10/29/2009 We received a letter from FPL they removed the meter and disconnected the FPL service wire.
As per an agreement between the Attorney for the City Department Rhonda Montoya, the Building Official, and the
building owner, this 40 years recertification case will be on hold until the building repairs/renovations can be finished. The violation can be closed as of 10/12/09.

B2050008

FPL

October 12, 2009

Re: 1529 Jefferson Ave

Effective 10/12/09, FPL has removed the meter and disconnected the FPL service wire to the above referenced address. However, before demolishing the structure, you should have the premises checked by a qualified individual to assure that electricity is not being supplied to the structure from any possible source. If there are any questions, or if I may be of further assistance in this matter, please contact me at the telephone number below.

Sincerely,

Yeshuwa Mayers

Yeshuwa Mayers
Engineer II
(305) 377 - 6125

40Year.com, Inc., Engineers
Professional Building Recertifications & Due-Diligence Inspections
Florida Registered Engineer, PE 24803

City of Miami Beach
Building Official
1700 Convention Center Drive
Miami Beach, FL 33139

May 29, 2009

RE: Building Security

Record Owner	**1529 JEFFERSON AVE LLC**
Property Address	**1529 JEFFERSON AVE**
Folio #	**02-3234-002-1350, 1, 2, & 3**

Dear Sirs:

This will attest that we have evaluated the subject building as of May 28, 2009. Details of our inspection are provided in our Recertification Report of this date.

We find that the building is not occupied and that it is in the early stages of interior demolition. No work is currently active.

The building is structurally stable at this time.

We note that openings have not yet been secured for long-term vacancy. We also note that there may be continued deterioration of wood framing due to apparent water intrusion at the roof.

If you have any questions please call me at (305) 271-8040.

Respectfully,

5/29/09

Donald W Shackelford, PE 40Year.com, Inc. John P Smiljanic, Engineer, MBA
7810 SW 66 Street, Miami, Florida 33143
Telephone 305 856-3986, Facsimile 305 273-1210
www.40year.com

40Year.com, Inc., Engineers
Professional Building Recertifications & Due-Diligence Inspections
Florida Registered Engineer, PE 24803

City of Miami Beach
Building Official
1700 Convention Center Drive
Miami Beach, FL 33139

May 29, 2009

RE: Recertification Of Buildings – 40 Years Old or Older

Record Owner	**STEPHEN MORSE**
Property Address	**1529 JEFFERSON AVE**
Folio #	**02-3234-002-1350**

Dear Sirs:

This letter shall serve to transmit the attached "Guidelines for Electrical & Structural Recertifications" for the above referenced address which will provide an itemized description of the condition of the various components.

This inspection was completed on May 28, 2009.

I attest that this building cannot be recertified at this time pending remediation of defects identified in the attached report.

As a routine matter, in order to avoid any possible misunderstanding, nothing in this report should be construed directly or indirectly as a guarantee for any portion of the structure or electrical system. To the best of my knowledge and ability, this report represents an accurate appraisal of the present condition of the building based upon careful evaluation of observed conditions, to the extent reasonably possible. No warranty is either expressed or implied.

If you have any questions please call me at (305) 271-8040.

Respectfully,

Donald W. Shackelford

5/29/09

Donald W Shackelford, PE 40Year.com, Inc. John P Smiljanic, Engineer, MBA
7810 SW 66 Street, Miami, Florida 33143
Telephone 305 856-3986, Facsimile 305 273-1210
www.40year.com

MIAMIBEACH

BUILDING DEPARTMENT

MINIMUM INSPECTION PROCEDURAL GUIDELINES FOR BUILDING'S STRUCTURAL RECERTIFICATION

INSPECTION COMMENCED DATE: November 30, 2005

INSPECTION COMPLETED DATE: May 28, 2009

INSPECTION MADE BY:

SIGNATURE 5/28/09

PRINT NAME Donald W. Shackelford

TITLE: Professional Engineer
PE # 24803

ADDRESS: 7810 SW 66th Street
Miami, FL 33143

Description of Structure

a. Name of Title: 1529 JEFFERSON AVE LLC

b. Street Address: 1529 JEFFERSON AVE

c. Legal Description: LINCOLN SUB PB 9-69 UNDIV 1/4 INT IN LOT 17 BLK 62 1529 JEFFERSON AVE APT #1 LOT SIZE 12.500 X 150 OR 16489-3033 0894 2 (4) **and others**

d. Owners Name: 1529 JEFFERSON AVE LLC

e. Owner's Mailing Address: 201 S BISCAYNE BLVD #850 MIAMI FL 33139-3444

f. Folio Number of Building: 02-3234-002-1350, 1, 2, & 3

g. Building Code Occupancy Classification: Group R-2

h. Present Use: Apartments - Vacant

i. General Description, Type of Construction, Size, Number of Stories, Special Features, and Additional Comment:

Two story CBS structure. Flat roof and parapet walls. Four apartment units. Approx 3,000 sq ft. Building is vacant and partial interior demolition has begun and has been halted at this time.

MINIMUM INSPECTION PROCEDURAL GUIDELINES FOR BUILDING'S STRUCTURAL RECERTIFICATION

1. Description of Structure

a. Name of Title:	1529 JEFFERSON AVE LLC
b. Street Address:	1529 JEFFERSON AVE
c. Legal Description:	LINCOLN SUB PB 9-69 UNDIV 1/4 INT IN LOT 17 BLK 62 1529 JEFFERSON AVE APT #1 LOT SIZE 12.500 X 150 OR 16489-3033 0894 2 (4) **and others**
d. Owners Name:	1529 JEFFERSON AVE LLC
e. Owner's Mailing Address:	201 S BISCAYNE BLVD #850 MIAMI FL 33139-3444
f. Folio Number of Building:	02-3234-002-1350, 1, 2, & 3
g. Building Code Occupancy Classification:	Group R-2
h. Present Use:	Apartments - Vacant

i. General Description, Type of Construction, Size, Number of Stories, Special Features, and Additional Comment:

Two story CBS structure. Flat roof and parapet walls. Four apartment units. Approx 3,000 sq ft. Building is vacant and partial interior demolition has begun and has been halted at this time.

Additions to Original Structure:

None

2. PRESENT CONDITION OF STRUCTURE

a. General alignment (note good, fair, poor, explain if significant)

1. Bulging	Good condition
2. Settlement	Good condition
3. Defections	Fair condition
4. Expansion	Good condition
5. Contraction	Good condition

b. Portion distressed (Note, beams, columns, structural walls, floors, roofs, other)

- Vertical cracks at exterior of concrete corner columns due to possible re-bar spalling at Northwest, Northeast, and Southwest corners; repair required.
- Concrete spall is observed at tie beam at attic level at the North; repair is required.
- Concrete spall is observed above Northwest windows; repair is required.
- Roof deck and rafter attachment are rotted at North; repair is required.
- Exterior steel stairs to 2nd floor at East are significantly rusted and missing 1 tread; repair/replacement required.
- Water intrusion above 2nd floor windows at Southeast and Southwest possibly due to roof leak; repair is required.
- Interior bearing wall has been removed for demolition at 1st floor north and has been shored; permanent structural support is required.

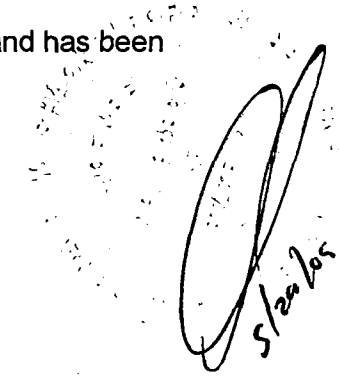

c. Surface conditions – describe general conditions of finishes, noting cracking, spalling, peeling, signs of moisture penetration & stains.
Fair condition

d. Cracks – note location in significant members. Identify crack size as HAIRLINE if barely discernible; FINE if less than 1 mm in width: MEDIUM if between 1 and 2 mm in width; WIDE if over 2 mm.
- Wide concrete spall crack is observed at tie beam at attic level at the North; repair is required.

e. General extent of deterioration – cracking or spalling of concrete or masonry; oxidation of metals; rot or borer attack in wood.
See 2b

f. Previous patching or repairs
Normal maintenance

g. Nature of present loading indicate residential, commercial, other; estimate magnitude.
Normal residential

3. INSPECTIONS

a. Date of notice of required inspection

b. Date(s) of actual inspection — November 30, 2005, April 28, 2009, & May 27, 2009.

c. Name and qualification of individual submitting inspection report:
Donald W. Shackelford, Structural Engineer, PE #24803

d. Description of any laboratory or other formal testing, if required, rather than manual or visual procedures:
None required

e. Structural repair note appropriate line:

1. None required
2. Required (describe and indicate acceptance)
See 2b

4. SUPPORTING DATA

a. sheet written data
b. photographs
c. drawings or sketches

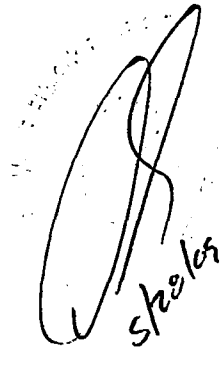

5. MASONRY BEARING WALL, Indicate good, fair, poor condition:

a. Concrete masonry units	Fair condition
b. Clay tile or terra cotta units	
c. Reinforced concrete tie columns	See 2b
d. Reinforced concrete tie beams	See 2b
e. Lintel	
f. Other type bond beams	
g. Masonry finishes - exterior	
1. Stucco	Fair condition
2. Veneer	
3. Paint only	
4. Other(describe)	
h. Masonry finishes - interior	
1. Vapor barrier	
2. Furring and plaster	Fair condition
3. Paneling	
4. Paint only	
5. Other (describe)	
i. Cracks:	
1. Location - note beams, columns, other	Tie beam
2. Description	Spall, see 2b
j. Spalling:	
1. Location - note beams, columns, other	Tie beam
2. Description	Spall, see 2b
k. Rebar corrosion-check appropriate line:	
1. None visible	
2. Minor-patching will suffice	
3. Significant-but patching will suffice	
4. Significant-structural repairs required	XXXX
l. Samples chipped out for examination in spall areas:	
1. No	XXXX
2. Yes - describe color, texture, aggregate, quality	

6. FLOOR AND ROOF SYSTEM

a. Roof:

1. Describe (flat, slope, type roofing, type roof deck, condition.
Flat roof. Built-up roofing in fair condition. Wood T&G deck in good condition overall. Roof deck and rafter attachment are rotted at North; repair is required.

2. Note water tanks, cooling towers, air conditioning equipment, signs, other heavy equipment and condition of support:
None

3. Note types of drains and scupper and condition:
Scuppers and downspouts in fair condition

b. Floor systems(s)

1. Describe (type of system framing, material, spans, condition)
Conventional wood floor joists at 1st and 2nd floors in fair condition. No visible deflections.

shelos

c. Inspection – note exposed areas available for inspection, and where it was found necessary to open ceilings, etc. for inspection of typical framing members.
Adequate visibility

7. STEEL FRAMING SYSTEM

a. Description:
None

b. Exposed Steel - describe condition of paint & degree of corrosion:
NA

c. Concrete or other fireproofing – note any cracking or spalling, and note where any covering was removed for inspection
NA

d. Elevator sheave beams & connections, and machine floor beams – note condition:
NA

8. CONCRETE FRAMING SYSTEM

a. Full description of structural system
Concrete spread footings. CBS walls with reinforced concrete tie beams and columns. CMU interior stem walls,

b. Cracking
1. Not significant
2. Location and description of members affected and type cracking
Tie beam and column cracking, See 2b

c. General condition
Fair condition overall, with exceptions, see 2b.

d. Rebar corrosion - check appropriate line:
1. Non visible
2. Location and description of members affected and type cracking
Tie beam spall, see 2b.
3. Significant but patching will suffice
4. Significant - structural repairs required (describe)
Tie beam spall, see 2b.

e. Samples chipped out in spall areas:
1. No XXXX
2. Yes, describe color, texture, aggregate, general quality:

9. WINDOWS

a. Type (Wood, steel, aluminum, jalousie, single hung, double hung, casement, awning, pivoted, fixed, other)
Aluminum awning

b. Anchorage – type & condition of fasteners and latches:
Fair condition

c. Sealant – type of condition of perimeter sealant & at mullions:
Fair condition

d. Interiors seals – type & condition at operable vents:
Fair condition

e. General condition:
Fair condition



10. WOOD FRAMING

a. Type – fully describe if mill construction, light construction, major spans, trusses; Conventional wood interior bearing walls, 1st & 2nd floor joists, 2nd floor ceiling joists, and rafters.

b. Metal fittings: angles, plates, bolts, split pintles, pintles, other, note condition: None observed

c. Joints – note if well fitted and still closed: Fair condition

d. Drainage – note accumulations of moisture: Evidence of past water intrusion observed at North of roof including deterioration of roof deck and rafter attachment; repair is required.

e. Ventilation –note any concealed spaces not ventilated: Adequate ventilation

f. Note any concealed spaces opened for inspection: Adequate visibility

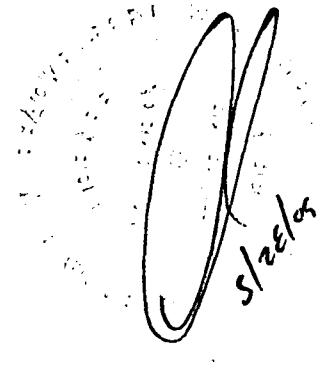

MIAMIBEACH

BUILDING DEPARTMENT

MINIMUM INSPECTION PROCEDURAL GUIDELINES FOR BUILDING'S ELECTRICAL RECERTIFICATION

INSPECTION COMMENCED DATE: November 30, 2005
:

INSPECTION COMPLETED DATE: May 28, 2009

INSPECTION MADE BY:

SIGNATURE 5/28/09
PRINT NAME Donald W. Shackelford

TITLE: Professional Engineer
PE # 24803

ADDRESS: 7810 SW 66th Street
Miami, FL 33143

Description of Structure

a. Name of Title: 1529 JEFFERSON AVE LLC
b. Street Address: 1529 JEFFERSON AVE
c. Legal Description: LINCOLN SUB PB 9-69 UNDIV 1/4 INT IN LOT 17 BLK 62 1529 JEFFERSON AVE APT #1 LOT SIZE 12.500 X 150 OR 16489-3033 0894 2 (4) **and others**
d. Owners Name: 1529 JEFFERSON AVE LLC
e. Owner's Mailing Address: 201 S BISCAYNE BLVD #850 MIAMI FL 33139-3444
f. Folio Number of Building: 02-3234-002-1350, 1, 2, & 3
g. Building Code Occupancy Classification: Group R-2
h. Present Use: Apartments - Vacant
i. General Description, Type of Construction, Size, Number of Stories, Special Features, and Additional Comment:

Two story CBS structure. Flat roof and parapet walls. Four apartment units. Approx 3,000 sq ft. Building is vacant and partial interior demolition has begun and has been halted at this time.

GUIDELINES AND INFORMATION FOR RECERTIFICATION OF ELECTRICAL SYSTEMS OF FORTY (40) YEAR STRUCTURES

1. ELECTRIC SERVICE

1. Size: Amperage (100) Fuses (XXX)Breakers ( )
2. Phase: 3-Phase ( ) 1-Phase (XXX)
3. Condition: Good ( ) Fair ( )Needs Repair (XXX)
4. Comments: Service conductors exposed at weatherhead. Service is deemed to be of inadequate capacity for current loads. Exposed wiring between meters and disconnects.

2. METER AND ELECTRIC ROOM

1. Clearances: Good (XXX) Fair ( ) Requires Correction ( )
2. Comments: Disconnects and meters at 1st floor East entrance foyer.

3. GUTTERS

1. Location: Good( ) Requires Repair ( )
   None

2. Taps and Fill: Good( ) Requires Repair ( )
3. Comments:

4. ELECTRICAL PANELS

1. Panel # (1) Location: 1st floor East entrance foyer
   Good( ) Needs Repair (XXX)
2. Panel # (2-5) Location: Individual apartments
   Good(XXX) Needs Repair ( )
3. Panel # ( ) Location:
   Good( ) Needs Repair ( )
4. Panel # ( ) Location:
   Good( ) Needs Repair ( )
5. Panel # ( ) Location:
   Good( ) Needs Repair ( )
6. Comments: House panel is open at top; secure enclosure required.

5. BRANCH CIRCUITS

1. Identified: Yes ( ) Must be Identified (XXX)
2. Conductors: Good ( ) Deteriorated(XXX) Must Replace ( )
3. Comments: Circuits unlabeled in units 1 & 2. Multiple instances of wiring through walls or behind molding utilizing extension cord; proper wiring required. Exposed wiring to transformer at disconnect board.

6. GROUNDING OF SERVICE

Condition: Good: (XXX) Repairs Required ( )
Comments:

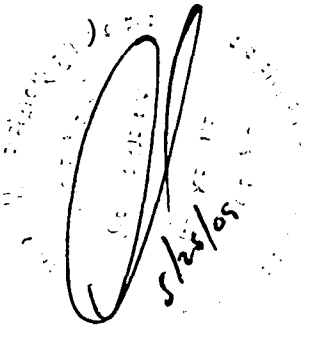

7. GROUNDING OF EQUIPMENT
Condition: Good: (XXX) Repairs Required ( )
Comments:

8. SERVICE CONDUITS/RACEWAYS
Condition: Good: (XXX) Repairs Required ( )
Comments:

9. SERVICE CONDUCTORS AND CABLES
Condition: Good: ( ) Repairs Required (XXX)
Comments: Deteriorated, see 1.

10. TYPES OF WIRING METHODS
Condition:
Conduit Raceways: Good: (XXX) Repairs Required ( )
Conduit PVC: Good: ( ) Repairs Required ( )
NM Cable: Good: ( ) Repairs Required ( )
BX Cable: Good: ( ) Repairs Required ( )

11. FEEDER CONDUCTORS
Condition: Good: ( ) Repairs Required (XXX)
Comments: Deteriorated/cut insulation; replacement required.

12. EMERGENCY LIGHTING
Condition: Good: ( ) Repairs Required ( )
Comments: Not present

13. BUILDING EGRESS ILLUMINATION
Condition: Good: (XXX) Repairs Required ( )
Comments:

14. FIRE ALARM SYSTEM
Condition: Good: ( ) Repairs Required ( )
Comments: Not present

15. SMOKE DETECTORS
Condition: Good: ( ) Repairs Required (XXX)
Comments: None installed



16. EXIT LIGHTS
Condition: Good: ( ) Repairs Required ( )
Comments: Not present

17. EMERGENCY GENERATOR
Condition: Good: ( ) Repairs Required ( )
Comments: Not present

18. WIRING IN OPEN OR UNDER COVER PARKING GARAGE AREAS
Condition: Good: ( ) Repairs Required (XXX)
Comments: Exposed wiring at East surrounding entrance door.

19. OPEN OR UNDERCOVER PARKING SURFACE AND SECURITY LIGHTING
Condition: Good: ( ) Repairs Required ( )
Comments: No parking on site, street parking only

20. SWIMMING POOL WIRING
Condition: Good: ( ) Repairs Required ( )
Comments: NA

21. WIRING OF MECHANICAL EQUIPMENT
Condition: Good: ( ) Repairs Required ( )
Comments: None at time inspection, through wall A/Cs removed for demolition.

22. General Additional Comments
Individual apartment ampacity is deemed inadequate due to A/C units, etc. Service ampacity limited. Load evaluation is required.

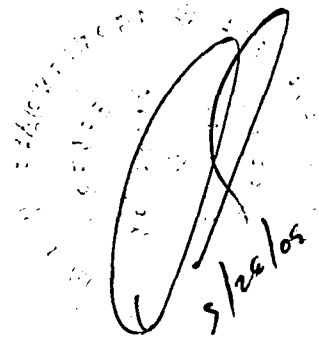

CITY OF MIAMI BEACH
BUILDING DEPARTMENT

COMMENTS LIST

11-05-2008

Activity Number: BV05001590

Site Address: 1529 JEFFERSON AV MBCH

BUILPERH 09/14/2005 Case Created by BUILPERH (added by script)
BUILPERH 09/14/2005 Inspector changed from BUILPERH to BUILPERH (added by script)
BUILPERH 09/14/2005 Initial Inspector: Herminia Perez (added by script)
BUILPERH 09/14/2005 Violation was issued and will be posted. Failure to comply with the required Building Re-certification.

BUILPERH 10/05/2005 Compliance changed from 10/25/2005 to 11/15/2005 (added by script)
BUILPERH 10/05/2005 Violation posted 10/04/05. Must comply by 11/15/05.
BUILAMAR 10/13/2005 RECIEVED PAPER WORK FOR NEW VIOLAITON AND CREATED FILE ON 10/13/2005\RA
BUILPERH 11/22/2005 Non-compliance. Prepare for Special Master.
BUILAMAR 12/07/2005 RECIEVED REQUEST TO SEND TO SMA AND PREPARED ON 12/07/2005\RA
BUILPERH 12/12/2005 We received the Structural and Electrical report for the Building located at 1529 JEFFERSON
AV, as per Donald Shackelford, the Building cannot be recertified needs structural and electrical repairs. Non-Compliance.
BUILPERH 03/30/2006 New owner as of 12/2005. Itshak Ankonina 201 S Biscayne Blvd. Suite 850 Miami, Fl. 33131
Son Michael Benhamou 786-333-2300
BUILPERH 04/06/2006 No permit have been pulled, Structural and Electrical repairs needed. Owner Must applied for
permits. JB06000113.
BUILPERH 04/07/2006 04/06/2006.....Special Masters Hearing. Must submit progress report by June 6, 2006.
BUILPERH 07/20/2006 B0605085 permit applied status. Description: Remodeling to include: bathroom tiles, fixtures,
replace plumbing, electrical panels, remove partition/20 impact windows and (4) doors, interior doors, new tile flooring and electrical fixstures, railings & rear stairs.
B0605108 permit applied status. Description: NEW 3 STORY BUILDING, 3 FLOORS, 6 UNITS, 5 PARKING SPACES, 1 HANDICAP
PARKING SPACE.
Progress report must be submit progress. JB06000113.
BUILPERH 10/05/2006 B0605085 permit applied status. Description: Remodeling to include: bathroom tiles, fixtures,
replace plumbing, electrical panels, remove partition/20 impact windows and (4) doors, interior doors, new tile flooring and electrical fixstures, railings & rear stairs.
B0605108 permit applied status. Description: NEW 3 STORY BUILDING, 3 FLOORS, 6 UNITS, 5 PARKING SPACES, 1 HANDICAP
PARKING SPACE.
Progress report must be submit progress. JB06000113.
BUILPERH 10/12/2006 10/05/06..... Must submit progress report on 12/07/2006.
BUILPERH 12/07/2006 Must submit progress report. JB06000113.
B0605085 permit applied status. Description: Remodeling to include: bathroom tiles, fixtures, replace plumbing,

CITY OF MIAMI BEACH
BUILDING DEPARTMENT

COMMENTS LIST

11-05-2008

Activity Number: BV05001590

Site Address: 1529 JEFFERSON AV MBCH

electrical panels, remove partition/20 impact windows and (4) doors, interior doors, new tile flooring and electrical fixstures, railings & rear stairs.
B0605108 permit applied status. Description: NEW 3 STORY BUILDING, 3 FLOORS, 6 UNITS, 5 PARKING SPACES, 1 HANDICAP
PARKING SPACE.
Both permits are in applied status.

BUILPERH 12/12/2006 Hearing date 12/07/2006.....Progress report by March 20, 2007. Compliance date was set
for
August 7, 2007.
BUILARNR 03/23/2007 As per SM Full Compliance by August 7, 2007. or fines. $250.00 per day shall begin running.
BUILARNR 08/08/2007 Non compliance, start running fines of $250.00 fines per day as of 08/07/07.
BUILAMAR 08/13/2007 Status chged to TO COURT (added by script)
BUILAMAR 08/13/2007 AFFIDAVIT OF NON COMPLIANCE PRINTED OUT ON 08/07/2007\RA
BUILARNR 06/17/2008 As per SM violator shall get new permits by June 17, 2008. or fines. $250.00 per day shall
begin running.
BUILARNR 06/20/2008 Non compliance, start running fines of $250.00 fines per day as of 06/17/07.
BUILARNR 11/05/2008 As per SM there shall be full compliance by 11/03/08, or fines of $150.00 per day shall begin
running.

BUILARNR 11/05/2008 NON COMPLIANCE. START RUNNING FINES OF $150.00 PER DAY AS OF 11/03/08.

CITY OF MIAMI BEACH
BUILDING DEPARTMENT

COMMENTS LIST

06-20-2008

Activity Number: **BV05001590**

Site Address: **1529 JEFFERSON AV MBCH**

BUILPERH 09/14/2005 Case Created by BUILPERH (added by script)
BUILPERH 09/14/2005 Inspector changed from BUILPERH to BUILPERH (added by script)
BUILPERH 09/14/2005 Initial Inspector: Herminia Perez (added by script)
BUILPERH 09/14/2005 Violation was issued and will be posted. Failure to comply with the required Building Re-certification.

BUILPERH 10/05/2005 Compliance changed from 10/25/2005 to 11/15/2005 (added by script)
BUILPERH 10/05/2005 Violation posted 10/04/05. Must comply by 11/15/05.
BUILAMAR 10/13/2005 RECIEVED PAPER WORK FOR NEW VIOLAITON AND CREATED FILE ON 10/13/2005\RA
BUILPERH 11/22/2005 Non-compliance. Prepare for Special Master.
BUILAMAR 12/07/2005 RECIEVED REQUEST TO SEND TO SMA AND PREPARED ON 12/07/2005\RA
BUILPERH 12/12/2005 We received the Structural and Electrical report for the Building located at 1529 JEFFERSON
AV, as per Donald Shackelford, the Building cannot be recertified needs structural and electrical repairs. Non-Compliance.
BUILPERH 03/30/2006 New owner as of 12/2005. Itshak Ankonina 201 S Biscayne Blvd. Suite 850 Miami, Fl. 33131
Son Michael Benhamou 786-333-2300
BUILPERH 04/06/2006 No permit have been pulled, Structural and Electrical repairs needed. Owner Must applied for
permits. JB06000113.
BUILPERH 04/07/2006 04/06/2006.....Special Masters Hearing. Must submit progress report by June 6, 2006.
BUILPERH 07/20/2006 B0605085 permit applied status. Description: Remodeling to include: bathroom tiles, fixtures,
replace plumbing, electrical panels, remove partition/20 impact windows and (4) doors, interior doors, new tile flooring and electrical fixstures, railings & rear stairs.
B0605108 permit applied status. Description: NEW 3 STORY BUILDING, 3 FLOORS, 6 UNITS, 5 PARKING SPACES, 1 HANDICAP
PARKING SPACE.
Progress report must be submit progress. JB06000113.
BUILPERH 10/05/2006 B0605085 permit applied status. Description: Remodeling to include: bathroom tiles, fixtures,
replace plumbing, electrical panels, remove partition/20 impact windows and (4) doors, interior doors, new tile flooring and electrical fixstures, railings & rear stairs.
B0605108 permit applied status. Description: NEW 3 STORY BUILDING, 3 FLOORS, 6 UNITS, 5 PARKING SPACES, 1 HANDICAP
PARKING SPACE.
Progress report must be submit progress. JB06000113.
BUILPERH 10/12/2006 10/05/06..... Must submit progress report on 12/07/2006.
BUILPERH 12/07/2006 Must submit progress report. JB06000113.
B0605085 permit applied status. Description: Remodeling to include: bathroom tiles, fixtures, replace plumbing,

CITY OF MIAMI BEACH
BUILDING DEPARTMENT

COMMENTS LIST

06-20-2008

Activity Number: **BV05001590**

Site Address: **1529 JEFFERSON AV MBCH**

---

electrical panels, remove partition/20 impact windows and (4) doors, interior doors, new tile flooring and electrical fixstures, railings & rear stairs.
B0605108 permit applied status. Description: NEW 3 STORY BUILDING, 3 FLOORS, 6 UNITS, 5 PARKING SPACES, 1 HANDICAP
PARKING SPACE.
Both permits are in applied status.

BUILPERH 12/12/2006 Hearing date 12/07/2006.....Progress report by March 20, 2007. Compliance date was set
for
August 7, 2007.
BUILARNR 03/23/2007 As per SM Full Compliance by August 7, 2007. or fines. $250.00 per day shall begin running.
BUILARNR 08/08/2007 Non compliance, start running fines of $250.00 fines per day as of 08/07/07.
BUILAMAR 08/13/2007 Status chged to TO COURT (added by script)
BUILAMAR 08/13/2007 AFFIDAVIT OF NON COMPLIANCE PRINTED OUT ON 08/07/2007\RA
BUILARNR 06/17/2008 As per SM violator shall get new permits by June 17, 2008. or fines. $250.00 per day shall
begin running.
BUILARNR 06/20/2008 Non compliance, start running fines of $250.00 fines per day as of 06/17/07.

CITY OF MIAMI BEACH
BUILDING DEPARTMENT

COMMENTS LIST

08-08-2007

Activity Number: **BV05001590**

Site Address: **1529 JEFFERSON AV MBCH**

BUILPERH 09/14/2005 Case Created by BUILPERH (added by script)
BUILPERH 09/14/2005 Inspector changed from BUILPERH to BUILPERH (added by script)
BUILPERH 09/14/2005 Initial Inspector: Herminia Perez (added by script)
BUILPERH 09/14/2005 Violation was issued and will be posted. Failure to comply with the required Building Re-certification.

BUILPERH 10/05/2005 Compliance changed from 10/25/2005 to 11/15/2005 (added by script)
BUILPERH 10/05/2005 Violation posted 10/04/05. Must comply by 11/15/05.
BUILAMAR 10/13/2005 RECIEVED PAPER WORK FOR NEW VIOLAITON AND CREATED FILE ON 10/13/2005\RA
BUILPERH 11/22/2005 Non-compliance. Prepare for Special Master.
BUILAMAR 12/07/2005 RECIEVED REQUEST TO SEND TO SMA AND PREPARED ON 12/07/2005\RA
BUILPERH 12/12/2005 We received the Structural and Electrical report for the Building located at 1529 JEFFERSON
AV, as per Donald Shackelford, the Building cannot be recertified needs structural and electrical repairs. Non-Compliance.
BUILPERH 03/30/2006 New owner as of 12/2005. Itshak Ankonina 201 S Biscayne Blvd. Suite 850 Miami, Fl. 33131
Son Michael Benhamou 786-333-2300
BUILPERH 04/06/2006 No permit have been pulled, Structural and Electrical repairs needed. Owner Must applied for
permits. JB06000113.
BUILPERH 04/07/2006 04/06/2006.....Special Masters Hearing. Must submit progress report by June 6, 2006.
BUILPERH 07/20/2006 B0605085 permit applied status. Description: Remodeling to include: bathroom tiles, fixtures,
replace plumbing, electrical panels, remove partition/20 impact windows and (4) doors, interior doors, new tile flooring and electrical fixstures, railings & rear stairs.
B0605108 permit applied status. Description: NEW 3 STORY BUILDING, 3 FLOORS, 6 UNITS, 5 PARKING SPACES, 1 HANDICAP
PARKING SPACE.
Progress report must be submit progress. JB06000113.
BUILPERH 10/05/2006 B0605085 permit applied status. Description: Remodeling to include: bathroom tiles, fixtures,
replace plumbing, electrical panels, remove partition/20 impact windows and (4) doors, interior doors, new tile flooring and electrical fixstures, railings & rear stairs.
B0605108 permit applied status. Description: NEW 3 STORY BUILDING, 3 FLOORS, 6 UNITS, 5 PARKING SPACES, 1 HANDICAP
PARKING SPACE.
Progress report must be submit progress. JB06000113.
BUILPERH 10/12/2006 10/05/06..... Must submit progress report on 12/07/2006.
BUILPERH 12/07/2006 Must submit progress report. JB06000113.
B0605085 permit applied status. Description: Remodeling to include: bathroom tiles, fixtures, replace plumbing,

CITY OF MIAMI BEACH
BUILDING DEPARTMENT

COMMENTS LIST

08-08-2007

Activity Number: **BV05001590**

Site Address: **1529 JEFFERSON AV MBCH**

---

electrical panels, remove partition/20 impact windows and (4) doors, interior doors, new tile flooring and electrical fixstures, railings & rear stairs.
B0605108 permit applied status. Description: NEW 3 STORY BUILDING, 3 FLOORS, 6 UNITS, 5 PARKING SPACES, 1 HANDICAP
PARKING SPACE.
Both permits are in applied status.

BUILPERH 12/12/2006 Hearing date 12/07/2006.....Progress report by March 20, 2007. Compliance date was set
for
August 7, 2007.
BUILARNR 03/23/2007 As per SM Full Compliance by August 7, 2007. or fines. $250.00 per day shall begin running.
BUILARNR 08/08/2007 Non compliance, start running fines of $250.00 fines per day as of 08/07/07.

CITY OF MIAMI BEACH
BUILDING DEPARTMENT

COMMENTS LIST

12-07-2006

Activity Number: **BV05001590**

Site Address: **1529 JEFFERSON AV MBCH**

BUILPERH 09/14/2005 Case Created by BUILPERH (added by script)
BUILPERH 09/14/2005 Inspector changed from BUILPERH to BUILPERH (added by script)
BUILPERH 09/14/2005 Initial Inspector: Herminia Perez (added by script)
BUILPERH 09/14/2005 Violation was issued and will be posted. Failure to comply with the required Building Re-certification.

BUILPERH 10/05/2005 Compliance changed from 10/25/2005 to 11/15/2005 (added by script)
BUILPERH 10/05/2005 Violation posted 10/04/05. Must comply by 11/15/05.
BUILAMAR 10/13/2005 RECIEVED PAPER WORK FOR NEW VIOLAITON AND CREATED FILE ON 10/13/2005\RA
BUILPERH 11/22/2005 Non-compliance. Prepare for Special Master.
BUILAMAR 12/07/2005 RECIEVED REQUEST TO SEND TO SMA AND PREPARED ON 12/07/2005\RA
BUILPERH 12/12/2005 We received the Structural and Electrical report for the Building located at 1529 JEFFERSON
AV, as per Donald Shackelford, the Building cannot be recertified needs structural and electrical repairs. Non-Compliance.
BUILPERH 03/30/2006 New owner as of 12/2005. Itshak Ankonina 201 S Biscayne Blvd. Suite 850 Miami, Fl. 33131
Son Michael Benhamou 786-333-2300
BUILPERH 04/06/2006 No permit have been pulled, Structural and Electrical repairs needed. Owner Must applied for
permits. JB06000113.
BUILPERH 04/07/2006 04/06/2006.....Special Masters Hearing. Must submit progress report by June 6, 2006.
BUILPERH 07/20/2006 B0605085 permit applied status. Description: Remodeling to include: bathroom tiles, fixtures,
replace plumbing, electrical panels, remove partition/20 impact windows and (4) doors, interior doors, new tile flooring and electrical fixstures, railings & rear stairs.
B0605108 permit applied status. Description: NEW 3 STORY BUILDING, 3 FLOORS, 6 UNITS, 5 PARKING SPACES, 1 HANDICAP
PARKING SPACE.
Progress report must be submit progress. JB06000113.
BUILPERH 10/05/2006 B0605085 permit applied status. Description: Remodeling to include: bathroom tiles, fixtures,
replace plumbing, electrical panels, remove partition/20 impact windows and (4) doors, interior doors, new tile flooring and electrical fixstures, railings & rear stairs.
B0605108 permit applied status. Description: NEW 3 STORY BUILDING, 3 FLOORS, 6 UNITS, 5 PARKING SPACES, 1 HANDICAP
PARKING SPACE.
Progress report must be submit progress. JB06000113.
BUILPERH 10/12/2006 10/05/06..... Must submit progress report on 12/07/2006.
BUILPERH 12/07/2006 Must submit progress report. JB06000113.
B0605085 permit applied status. Description: Remodeling to include: bathroom tiles, fixtures, replace plumbing,

[COMMENTS] - Progress report march 20/07
- Must comply 8/7/07

CITY OF MIAMI BEACH
BUILDING DEPARTMENT

COMMENTS LIST

12-07-2006

Activity Number: **BV05001590**

Site Address: **1529 JEFFERSON AV MBCH**

---

electrical panels, remove partition/20 impact windows and (4) doors, interior doors, new tile flooring and electrical fixstures, railings & rear stairs.
B0605108 permit applied status. Description: NEW 3 STORY BUILDING, 3 FLOORS, 6 UNITS, 5 PARKING SPACES, 1 HANDICAP
PARKING SPACE.
Both permits are in applied status.

CITY OF MIAMI BEACH
BUILDING DEPARTMENT

COMMENTS LIST

10-05-2006

Activity Number: **BV05001590**

Site Address: **1529 JEFFERSON AV MBCH** P.E.R.

BUILPERH 09/14/2005 Case Created by BUILPERH (added by script)
BUILPERH 09/14/2005 Inspector changed from BUILPERH to BUILPERH (added by script)
BUILPERH 09/14/2005 Initial Inspector: Herminia Perez (added by script)
BUILPERH 09/14/2005 Violation was issued and will be posted. Failure to comply with the required Building Re-certification.

BUILPERH 10/05/2005 Compliance changed from 10/25/2005 to 11/15/2005 (added by script)
BUILPERH 10/05/2005 Violation posted 10/04/05. Must comply by 11/15/05.
BUILAMAR 10/13/2005 RECIEVED PAPER WORK FOR NEW VIOLAITON AND CREATED FILE ON 10/13/2005\RA
BUILPERH 11/22/2005 Non-compliance. Prepare for Special Master.
BUILAMAR 12/07/2005 RECIEVED REQUEST TO SEND TO SMA AND PREPARED ON 12/07/2005\RA
BUILPERH 12/12/2005 We received the Structural and Electrical report for the Building located at 1529 JEFFERSON
AV, as per Donald Shackelford, the Building cannot be recertified needs structural and electrical repairs. Non-Compliance.
BUILPERH 03/30/2006 New owner as of 12/2005. Itshak Ankonina 201 S Biscayne Blvd. Suite 850 Miami, Fl. 33131
Son Michael Benhamou 786-333-2300
BUILPERH 04/06/2006 No permit have been pulled, Structural and Electrical repairs needed. Owner Must applied for
permits. JB06000113.
BUILPERH 04/07/2006 04/06/2006.....Special Masters Hearing. Must submit progress report by June 6, 2006.
BUILPERH 07/20/2006 B0605085 permit applied status. Description: Remodeling to include: bathroom tiles, fixtures,
replace plumbing, electrical panels, remove partition/20 impact windows and (4) doors, interior doors, new tile flooring and electrical fixstures, railings & rear stairs.
B0605108 permit applied status. Description: NEW 3 STORY BUILDING, 3 FLOORS, 6 UNITS, 5 PARKING SPACES, 1 HANDICAP
PARKING SPACE.
Progress report must be submit progress. JB06000113.
BUILPERH 10/05/2006 B0605085 permit applied status. Description: Remodeling to include: bathroom tiles, fixtures,
replace plumbing, electrical panels, remove partition/20 impact windows and (4) doors, interior doors, new tile flooring and electrical fixstures, railings & rear stairs.
B0605108 permit applied status. Description: NEW 3 STORY BUILDING, 3 FLOORS, 6 UNITS, 5 PARKING SPACES, 1 HANDICAP
PARKING SPACE.
Progress report must be submit progress. JB06000113.

10/05/06 Progress report Dec 07, 2006

[COMMENTS]

CITY OF MIAMI BEACH
BUILDING DEPARTMENT

COMMENTS LIST

07-20-2006

Activity Number: **BV05001590**

Site Address: **1529 JEFFERSON AV MBCH**

BUILPERH 09/14/2005 Case Created by BUILPERH (added by script)
BUILPERH 09/14/2005 Inspector changed from BUILPERH to BUILPERH (added by script)
BUILPERH 09/14/2005 Initial Inspector: Herminia Perez (added by script)
BUILPERH 09/14/2005 Violation was issued and will be posted. Failure to comply with the required Building Re-certification.

BUILPERH 10/05/2005 Compliance changed from 10/25/2005 to 11/15/2005 (added by script)
BUILPERH 10/05/2005 Violation posted 10/04/05. Must comply by 11/15/05.
BUILAMAR 10/13/2005 RECIEVED PAPER WORK FOR NEW VIOLAITON AND CREATED FILE ON 10/13/2005\RA
BUILPERH 11/22/2005 Non-compliance. Prepare for Special Master.
BUILAMAR 12/07/2005 RECIEVED REQUEST TO SEND TO SMA AND PREPARED ON 12/07/2005\RA
BUILPERH 12/12/2005 We received the Structural and Electrical report for the Building located at 1529 JEFFERSON
AV, as per Donald Shackelford, the Building cannot be recertified needs structural and electrical repairs. Non-Compliance.
BUILPERH 03/30/2006 New owner as of 12/2005. Itshak Ankonina 201 S Biscayne Blvd. Suite 850 Miami, Fl. 33131
Son Michael Benhamou 786-333-2300
BUILPERH 04/06/2006 No permit have been pulled, Structural and Electrical repairs needed. Owner Must applied for
permits. JB06000113.
BUILPERH 04/07/2006 ~~04/06/2006~~.....Special Masters Hearing. Must submit progress report by June 6, 2006.
BUILPERH 07/20/2006 B0605085 permit applied status. Description: Remodeling to include: bathroom tiles, fixtures,
replace plumbing, electrical panels, remove partition/20 impact windows and (4) doors, interior doors, new tile flooring and electrical fixstures, railings & rear stairs.
B0605108 permit applied status. Description: NEW 3 STORY BUILDING, 3 FLOORS, 6 UNITS, 5 PARKING SPACES, 1 HANDICAP
PARKING SPACE.
Progress report must be submit progress. JB06000113.

Pending 2000

~~Demo?~~ No Demo, Is historical Bldg

New Separate Bldg. (no attach)

Progress Report

October 5th.

[COMMENTS]

CITY OF MIAMI BEACH
BUILDING DEPARTMENT

COMMENTS LIST

04-06-2006

Activity Number: **BV05001590**

Site Address: **1529 JEFFERSON AV MBCH**

BUILPERH 09/14/2005 Case Created by BUILPERH (added by script)
BUILPERH 09/14/2005 Inspector changed from BUILPERH to BUILPERH (added by script)
BUILPERH 09/14/2005 Initial Inspector: Herminia Perez (added by script)
BUILPERH 09/14/2005 Violation was issued and will be posted. Failure to comply with the required Building Re-certification.

BUILPERH 10/05/2005 Compliance changed from 10/25/2005 to 11/15/2005 (added by script)
BUILPERH 10/05/2005 Violation posted 10/04/05. Must comply by 11/15/05.
BUILAMAR 10/13/2005 RECIEVED PAPER WORK FOR NEW VIOLAITON AND CREATED FILE ON 10/13/2005\RA
BUILPERH 11/22/2005 Non-compliance. Prepare for Special Master.
BUILAMAR 12/07/2005 RECIEVED REQUEST TO SEND TO SMA AND PREPARED ON 12/07/2005\RA
BUILPERH 12/12/2005 We received the Structural and Electrical report for the Building located at 1529 JEFFERSON
AV, as per Donald Shackelford, the Building cannot be recertified needs structural and electrical repairs. Non-Compliance.
BUILPERH 03/30/2006 New owner as of 12/2005. Itshak Ankonina 201 S Biscayne Blvd. Suite 850 Miami, Fl. 33131
Son Michael Benhamou 786-333-2300
BUILPERH 04/06/2006 No permit have been pulled, Structural and Electrical repairs needed. Owner Must applied for
permits. JB06000113.?

Progress report 3 month B0605085 :
B0605108 ⇒ New JB06000113

40Year.com, Inc., Engineers
Professional Building Recertifications & Due-Diligence Inspections
Florida Registered Engineer, PE 24803

City of Miami Beach
Building Official
1700 Convention Center Drive
Miami Beach, FL 33139

December 1, 2005

RE: Recertification Of Buildings – 40 Years Old or Older

Record Owner	**STEPHEN MORSE**
Property Address	**1529 JEFFERSON AVE**
Folio #	**02-3234-002-1350**

Dear Sirs:

This letter shall serve to transmit the attached "Guidelines for Electrical & Structural Recertifications" for the above referenced address which will provide an itemized description of the condition of the various components.

This inspection was completed on November 30, 2005.

I attest that this building cannot be recertified at this time pending remediation of defects identified in the attached report.

As a routine matter, in order to avoid any possible misunderstanding, nothing in this report should be construed directly or indirectly as a guarantee for any portion of the structure or electrical system. To the best of my knowledge and ability, this report represents an accurate appraisal of the present condition of the building based upon careful evaluation of observed conditions, to the extent reasonably possible. No warranty is either expressed or implied.

If you have any questions please call me at (305) 271-8040.

Respectfully,

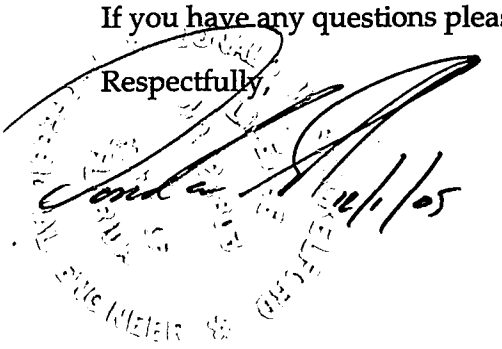

Donald W Shackelford, PE 40Year.com, Inc. John P Smiljanic, Engineer, MBA
7810 SW 66 Street, Miami, Florida 33143
Telephone 305 856-3986, Facsimile 305 273-1210
www.40year.com

MINIMUM INSPECTION PROCEDURAL GUIDELINES FOR BUILDING'S STRUCTURAL RECERTIFICATION

INSPECTION COMMENCED DATE: **November 30, 2005**

INSPECTION COMPLETED DATE: **November 30, 2005**

INSPECTION MADE BY:

SIGNATURE

PRINT NAME **Donald W. Shackelford**

TITLE: **Professional Engineer**
PE # 24803

ADDRESS: **7810 SW 66th Street**
Miami, FL 33143

Description of Structure

a. Name of Title: **STEPHEN MORSE**

b. Street Address: **1529 JEFFERSON AVE**

c. Legal Description: **LINCOLN SUB PB 9-69 UNDIV 1/4 INT IN LOT 17 BLK 62 1529 JEFFERSON AVE APT #1 LOT SIZE 12.500 X 150 OR 16489-3033 0894 2 (4)**

d. Owners Name: **STEPHEN MORSE**

e. Owner's Mailing Address: **248 MOTT ST #18**
NEW YORK NY 10012

f. Folio Number of Building: **02-3234-002-1350**

g. Building Code Occupancy Classification: **Group R-2**

h. Present Use: **Apartments**

i. General Description, Type of Construction, Size, Number of Stories, Special Features, and Additional Comment:

Two story CBS structure. Flat roof and parapet walls. Four apartment units. Approx 3,000 sq ft.

MINIMUM INSPECTION PROCEDURAL GUIDELINES FOR BUILDING'S STRUCTURAL RECERTIFICATION

1. Description of Structure

a. Name of Title: **STEPHEN MORSE**
b. Street Address: **1529 JEFFERSON AVE**
c. Legal Description: **LINCOLN SUB PB 9-69 UNDIV 1/4 INT IN LOT 17 BLK 62 1529 JEFFERSON AVE APT #1 LOT SIZE 12.500 X 150 OR 16489-3033 0894 2 (4)**

d. Owners Name: **STEPHEN MORSE**
e. Owner's Mailing Address: **248 MOTT ST #18 NEW YORK NY 10012**

f. Folio Number of Building: **02-3234-002-1350**
g. Building Code Occupancy Classification: **Group R-2**
h. Present Use: **Apartments**
i. General Description, Type of Construction, Size, Number of Stories, Special Features, and Additional Comment:

Two story CBS structure. Flat roof and parapet walls. Four apartment units. Approx 3,000 sq ft.

Additions to Original Structure:

None

2. PRESENT CONDITION OF STRUCTURE

a. General alignment (note good, fair, poor, explain if significant)

1. Bulging **Good condition**
2. Settlement **Good condition**
3. Defections **Good condition**
4. Expansion **Good condition**
5. Contraction **Good condition**

b. Portion distressed (Note, beams, columns, structural walls, floors, roofs, other)

- Vertical cracks at exterior of concrete corner columns due to possible re-bar spalling at Northwest, Northeast, and Southwest corners; repair required.
- Exterior steel stairs to 2nd floor at East are significantly rusted and missing 1 tread; repair/replacement required.
- Water intrusion above 2nd floor windows at Southeast and Southwest possibly due to sealant failure at eyebrow; repair required.

c. Surface conditions – describe general conditions of finishes, noting cracking, spalling, peeling, signs of moisture penetration & stains.

Fair condition. Limited fading.

d. Cracks – note location in significant members. Identify crack size as HAIRLINE if barely discernible; FINE if less than 1 mm in width: MEDIUM if between 1 and 2 mm in width; WIDE if over 2 mm.

Fine cracks in corner columns, see 2b.

e. General extent of deterioration – cracking or spalling of concrete or masonry; oxidation of metals; rot or borer attack in wood.

Generally fair condition, see 2b.

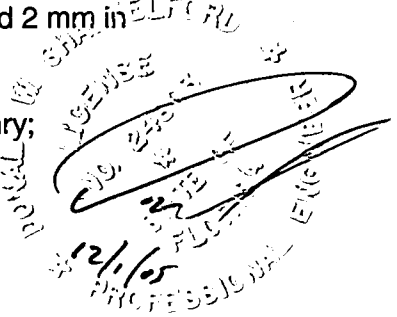

f. Previous patching or repairs
Normal maintenance

g. Nature of present loading indicate residential, commercial, other; estimate magnitude.
Normal residential

3. INSPECTIONS

a. Date of notice of required inspection
b. Date(s) of actual inspection **November 30, 2005**
c. Name and qualification of individual submitting inspection report:
Donald W. Shackelford, Structural Engineer, PE #24803
d. Description of any laboratory or other formal testing, if required, rather than manual or visual procedures:
None required
e. Structural repair note appropriate line:
1. None required
2. Required (describe and indicate acceptance)
See 2b

4. SUPPORTING DATA

a. sheet written data
b. photographs
c. drawings or sketches

5. MASONRY BEARING WALL, Indicate good, fair, poor condition:

a. Concrete masonry units — **Fair condition**
b. Clay tile or terra cotta units
c. Reinforced concrete tie columns — **Fair to poor condition, see 2b**
d. Reinforced concrete tie beams — **Not observed**
e. Lintel
f. Other type bond beams
g. Masonry finishes - exterior
1. Stucco — **Fair condition**
2. Veneer
3. Paint only
4. Other(describe)
h. Masonry finishes - interior
1. Vapor barrier
2. Furring and plaster — **Fair condition**
3. Paneling
4. Paint only
5. Other (describe)
i. Cracks:
1. Location - note beams, columns, other — **See 2b**
2. Description
j. Spalling:
1. Location - note beams, columns, other — **See 2b**
2. Description — Fine vertical column cracks

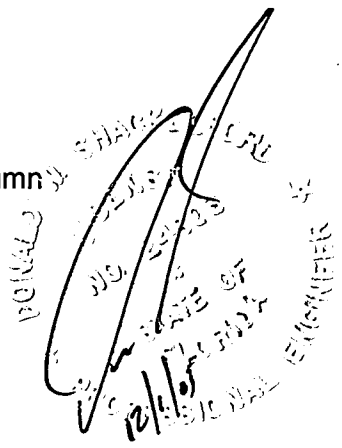

k. Rebar corrosion-check appropriate line:
1. None visible
2. Minor-patching will suffice
3. Significant-but patching will suffice **XXXX**
4. Significant-structural repairs required

l. Samples chipped out for examination in spall areas:
1. No **XXXX**
2. Yes - describe color, texture, aggregate, quality

6. FLOOR AND ROOF SYSTEM

a. Roof:
1. Describe (flat, slope, type roofing, type roof deck, condition.
Flat roof. Built-up roofing in fair condition. Wood T&G deck in good condition.

2. Note water tanks, cooling towers, air conditioning equipment, signs, other heavy equipment and condition of support:
None

3. Note types of drains and scupper and condition:
Scuppers to downspouts in fair condition

b. Floor systems(s)
1. Describe (type of system framing, material, spans, condition)
Conventional wood floor joists at 1st and 2nd floors in fair condition. No visible deflections.

c. Inspection – note exposed areas available for inspection, and where it was found necessary to open ceilings, etc. for inspection of typical framing members.
Adequate visibility

7. STEEL FRAMING SYSTEM

a. Description:
None visible

b. Exposed Steel - describe condition of paint & degree of corrosion:
N/A

c. Concrete or other fireproofing – note any cracking or spalling, and note where any covering was removed for inspection
N/A

d. Elevator sheave beams & connections, and machine floor beams – note condition:
N/A

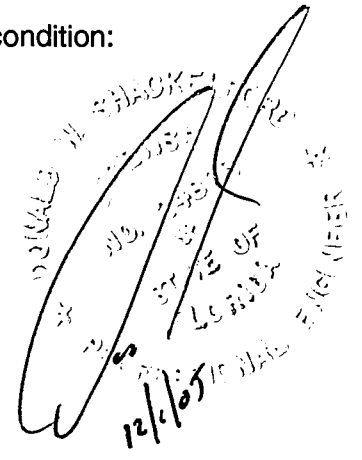

8. CONCRETE FRAMING SYSTEM

a. Full description of structural system
Concrete spread footings. CBS walls and CMU interior stem walls,

b. Cracking
1. Not significant
2. Location and description of members affected and type cracking
See 2b

c. General condition
Generally fair condition.

d. Rebar corrosion - check appropriate line:
1. Non visible
2. Location and description of members affected and type cracking
See 2b
3. Significant but patching will suffice **XXXX**
4. Significant - structural repairs required (describe)

e. Samples chipped out in spall areas:
1. No
2. Yes, describe color, texture, aggregate, general quality:

9. WINDOWS

a. Type (Wood, steel, aluminum, jalousie, single hung, double hung, casement, awning, pivoted, fixed, other)
Aluminum awning

b. Anchorage – type & condition of fasteners and latches:
Fair condition

c. Sealant – type of condition of perimeter sealant & at mullions:
Fair condition

d. Interiors seals – type & condition at operable vents:
Fair condition

e. General condition:
Fair condition

10. WOOD FRAMING

a. Type – fully describe if mill construction, light construction, major spans, trusses;
Conventional wood interior bearing walls, 1st & 2nd floor joists, 2nd floor ceiling joists, and rafters.

b. Metal fittings: angles, plates, bolts, split pintles, pintles, other, note condition:
None observed

c. Joints – note if well fitted and still closed:
Good condition

d. Drainage – note accumulations of moisture:
No evidence of current water intrusion observed

e. Ventilation –note any concealed spaces not ventilated:
Adequate ventilation

f. Note any concealed spaces opened for inspection:
Adequate visibility



MINIMUM INSPECTION PROCEDURAL GUIDELINES FOR BUILDING'S ELECTRICAL RECERTIFICATION

INSPECTION COMMENCED DATE: **November 30, 2005**
:

INSPECTION COMPLETED DATE: **November 30, 2005**

INSPECTION MADE BY:

SIGNATURE
PRINT NAME **Donald W. Shackelford**

TITLE: **Professional Engineer**
PE # 24803

ADDRESS: **7810 SW 66th Street**
Miami, FL 33143

Description of Structure

a. Name of Title: **STEPHEN MORSE**
b. Street Address: **1529 JEFFERSON AVE**
c. Legal Description: **LINCOLN SUB PB 9-69 UNDIV 1/4 INT IN LOT 17 BLK 62 1529 JEFFERSON AVE APT #1 LOT SIZE 12.500 X 150 OR 16489-3033 0894 2 (4)**

d. Owners Name: **STEPHEN MORSE**
e. Owner's Mailing Address: **248 MOTT ST #18**
NEW YORK NY 10012

f. Folio Number of Building: **02-3234-002-1350**
g. Building Code Occupancy Classification: **Group R-2**
h. Present Use: **Apartments**
i. General Description, Type of Construction, Size, Number of Stories, Special Features, and Additional Comment:
Two story CBS structure. Flat roof and parapet walls. Four apartment units. Approx 3,000 sq ft.

GUIDELINES AND INFORMATION FOR RECERTIFICATION OF ELECTRICAL SYSTEMS OF FORTY (40) YEAR STRUCTURES

1. ELECTRIC SERVICE

1. Size: Amperage (**100**) Fuses (**XXX**)Breakers ( )
2. Phase: 3-Phase ( ) 1-Phase (**XXX**)
3. Condition: Good ( ) Fair ( )Needs Repair (**XXX**)
4. Comments: Conductors exposed at weatherhead; replacement required.

2. METER AND ELECTRIC ROOM

1. Clearances: Good (**XXX**) Fair ( ) Requires Correction ( )
2. Comments: **Disconnects and meters at 1st floor East entrance foyer.**

3. GUTTERS

1. Location: Good( ) Requires Repair ( )
   None

2. Taps and Fill: Good( ) Requires Repair ( )
3. Comments:

4. ELECTRICAL PANELS

1. Panel # (**1**) Location: **1st floor East entrance foyer**
   Good( ) Needs Repair (**XXX**)
2. Panel # (**2-4**) Location: **Individual apartments**
   Good(**XXX**) Needs Repair ( )
3. Panel # ( ) Location:
   Good( ) Needs Repair ( )
4. Panel # ( ) Location:
   Good( ) Needs Repair ( )
5. Panel # ( ) Location:
   Good( ) Needs Repair ( )
6. Comments: House panel is open at top; secure enclosure required.

5. BRANCH CIRCUITS

1. Identified: Yes ( ) Must be Identified (**XXX**)
2. Conductors: Good ( ) Deteriorated(**XXX**) Must Replace ( )
3. Comments: Circuits unlabeled in units 1 & 2. Multiple instances of wiring through walls or behind molding utilizing extension cord; proper wiring required. Exposed wiring to transformer at disconnect board.

6. GROUNDING OF SERVICE

Condition: Good: (**XXX**) Repairs Required (
Comments:

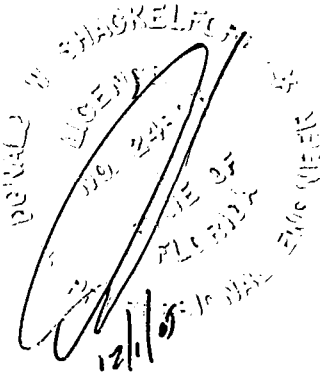

7. GROUNDING OF EQUIPMENT
Condition: Good: (**XXX**) Repairs Required ( )
Comments:

8. SERVICE CONDUITS/RACEWAYS
Condition: Good: (**XXX**) Repairs Required ( )
Comments:

9. SERVICE CONDUCTORS AND CABLES
Condition: Good: ( ) Repairs Required (**XXX**)
Comments: Deteriorated, see 1.

10. TYPES OF WIRING METHODS
Condition:
Conduit Raceways: Good: (**XXX**) Repairs Required ( )
Conduit PVC: Good: ( ) Repairs Required ( )
NM Cable: Good: ( ) Repairs Required ( )
BX Cable: Good: ( ) Repairs Required ( )

11. FEEDER CONDUCTORS
Condition: Good: ( ) Repairs Required (**XXX**)
Comments: Deteriorated/cut insulation; replacement required.

12. EMERGENCY LIGHTING
Condition: Good: ( ) Repairs Required ( )
Comments: **Not present**

13. BUILDING EGRESS ILLUMINATION
Condition: Good: (**XXX**) Repairs Required ( )
Comments:

14. FIRE ALARM SYSTEM
Condition: Good: ( ) Repairs Required ( )
Comments: **Not present**

15. SMOKE DETECTORS
Condition: Good: ( ) Repairs Required (**XXX**)
Comments: **None present**

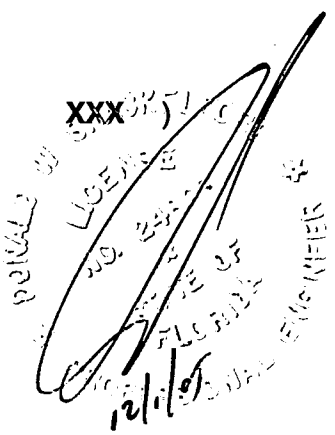

16. EXIT LIGHTS
Condition: Good: ( ) Repairs Required ( )
Comments: **Not present**

17. EMERGENCY GENERATOR
Condition: Good: ( ) Repairs Required ( )
Comments: **Not present**

18. WIRING IN OPEN OR UNDER COVER PARKING GARAGE AREAS
Condition: Good: ( ) Repairs Required (**XXX**)
Comments: Exposed wiring at East surrounding entrance door.

19. OPEN OR UNDERCOVER PARKING SURFACE AND SECURITY LIGHTING
Condition: Good: (**XXX**) Repairs Required ( )
Comments: **No parking on site.**

20. SWIMMING POOL WIRING
Condition: Good: ( ) Repairs Required ( )
Comments: **N/A**

21. WIRING OF MECHANICAL EQUIPMENT
Condition: Good: (**XXX**) Repairs Required ( )
Comments: **Window A/Cs only**

22. General Additional Comments
Individual apartment ampacity appears overloaded due to A/C units, etc. Service ampacity limited. Load evaluation is required.

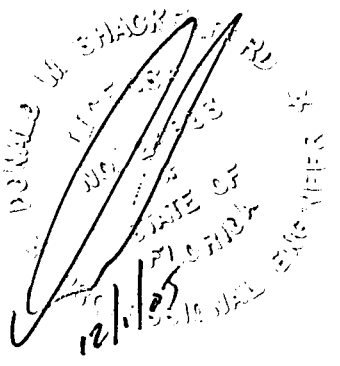

CITY OF MIAMI BEACH
BUILDING DEPARTMENT

COMMENTS LIST

11-22-2005

Activity Number: **BV05001590**

Site Address: **1529 JEFFERSON AV MBCH**

BUILPERH 09/14/2005 Case Created by BUILPERH (added by script)
BUILPERH 09/14/2005 Inspector changed from BUILPERH to BUILPERH (added by script)
BUILPERH 09/14/2005 Initial Inspector: Herminia Perez (added by script)
BUILPERH 09/14/2005 Violation was issued and will be posted. Failure to comply with the required Building Re-certification.

BUILPERH 10/05/2005 Compliance changed from 10/25/2005 to 11/15/2005 (added by script)
BUILPERH 10/05/2005 Violation posted 10/04/05. Must comply by 11/15/05.
BUILAMAR 10/13/2005 RECIEVED PAPER WORK FOR NEW VIOLAITON AND CREATED FILE ON 10/13/2005\RA
BUILPERH 11/22/2005 Non-compliance. Prepare for Special Master.

[COMMENTS]

CITY OF MIAMI BEACH
BUILDING DEPARTMENT

COMMENTS LIST

11-22-2005

Activity Number: **BR050008**

Site Address: **1529 JEFFERSON AV MBCH**

BUILFERC 11/15/2004 11/15/2004.....We will sent all the docuemts to the owner.
BUILPERH 01/06/2005 11/17/04..... CM 7002-2410-0003-5176-0541. Was Signed and Received on 11/17/04.
BUILPERH 04/11/2005 Final Notice Issued and will be posted.
BUILPERH 04/13/2005 04/12/05.....Final Notice Posted. Letter on file.
BUILPERH 05/25/2005 Final Notice was issued under Mardall Corp and was posted on the building. Final Notice send
to New Owner CM-7004-1160-0006-3298-9783.
BUILPERH 06/28/2005 Spoke to the new owner Kris Puryear Must Comply by 07/28/05.
BUILPERH 09/14/2005 BV05001590 issued and will be posted. Failure to comply with the required Building Re-certification.

BUILPERH 10/05/2005 Violation posted 10/04/05. Must comply by 11/15/05.
BUILPERH 11/02/2005 10/28/05.. We received a fax from Kristina Puryear, Building will be under renovation.
Extension letter will be submitted by the Architect.
BUILPERH 11/22/2005 As of today, no Extension letter was received from the architect. Non-compliance. Prepare for
Special Master.

CITY OF MIAMI BEACH
Miami Beach, Florida 33139

RECEIPT OF PAYMENT

(This is not a permit it is a receipt only)

11-22-2005

Receipt:

Activity Number: **BR050008**
Status: **APPLIED**

Date Applied: **11/15/2004** Date Issued:
Date Completed: Date Expired:

Entered By: **BUILFERC**

Site Address: **1529 JEFFERSON AV MBCH**
Parcel #: **32340021350**

Balance Due: **$400.00**
Valuation: **$0.00**

Applicant: **STEPHEN MORSE**
248 MOTT ST #18
NEW YORK NY 10012

Owner: **STEPHEN MORSE**
248 MOTT ST #18
NEW YORK NY 10012

Description: Ten Years Building Re-Certification.

Payments made for this receipt:

Type	Method	Description	Amount

Payment Made: Accepted By:

Total Payment: .00 Payee:

Current Payment Made to the Following Items:

Account Summary for Fees and Payments:

Item#	Description	Account Code	Tot Fee	Paid	Prev. Pmts	Cur. Pmts
260	Recertification	0118000322620	400.00	.00	.00	.00

BV05001590 1529 **JEFFERSON AV** Status: **OPEN**

Type: Building Violation Subtype: ENGINEER

Description: Failure to comply with the required Building Re-certification.

APPLICANT STEPHEN MORSE

1870 1870-Engineering Inspection Request for inspection of item# 1870

Date Inspected: _____ Inspector: **Herminia Perez** Action: _____

Remarks: _____

Inspection History - Last 10 Item

Item #	Description	Date	Act	Comments
1870	1870-Engineering Inspection	09/14/2005	NC	Failure to comply with the required Building Re-certification.

Review on Monday 11/07/05

Kristina Puryear.

Glen
1300 Ocean Dr.
305 466-7827

Base flood elevation 8.00
Zon AE.

Ques# BV05001590

To: Herminia Perez
From: Kristina Puryear / on behalf of Stephen Morse
Date: October 27, 2005
Re: 1529 Jefferson Ave, 40 Year Recertification Certificate

Dear Ms Perez

I have tried to contact the engineering department, and left many messages with : Carlos Fernandez, Eric Perry, or Moshen Jarapour. I have also left messages on an answering machine. Nothing seems to get a call back.

The first notification I had of this 40 year recertification requirement was a "Final Notice" received in May. We are in the process of doing renovation on the property and I was going to wait until the renovation was complete before undertaking the 40 year recertification process.

However, we have not been able to undertake the renovation in time and now I am asking for a two week continuance so that I can get someone to do the 40 year recertification with the building "as is".. My architect working on the renovation does not do re-certifications so I have been forced to find someone else. I was in talks with someone else last week, but have not been able to confirm the recertification this week as a result of Wilma.

Can you please call me back on the number below so that we can discuss how to get this resolved. Again, I apologize for the delay, I waited because I thought it would make sense to do it after the renovation, but now I am just keen not to be in violation of the rules.

Please call me.

Thank you

Regards,
Kristina Puryear
917-450-0944

11/02/05 Spoke to Kristina Puryear. Architect will submit letter of extension for the renovation

CITY OF MIAMI BEACH
BUILDING DEPARTMENT

COMMENTS LIST

10-05-2005

Activity Number: **BV05001590**

Site Address: **1529 JEFFERSON AV MBCH**

BUILPERH 09/14/2005 Case Created by BUILPERH (added by script)
BUILPERH 09/14/2005 Inspector changed from BUILPERH to BUILPERH (added by script)
BUILPERH 09/14/2005 Initial Inspector: Herminia Perez (added by script)
BUILPERH 09/14/2005 Violation was issued and will be posted. Failure to comply with the required Building Re-certification.

BUILPERH 10/05/2005 Compliance changed from 10/25/2005 to 11/15/2005 (added by script)
BUILPERH 10/05/2005 Violation posted 10/04/05. Must comply by 11/15/05.

[COMMENTS]

CITY OF MIAMI BEACH
CITY HALL 1700 CONVENTION CENTER DRIVE MIAMI BEACH, FLORIDA 33139
www.ci.miami-beach.fl.us

Building Department

Telephone (305) 673-7610
Facsimile (305) 673-7857

STOP WORK ORDER / NOTICE OF VIOLATION

Violator:
STEPHEN MORSE
248 MOTT ST #18
NEW YORK NY
10012-

Owner:
STEPHEN MORSE
248 MOTT ST #18
NEW YORK NY
10012-

Case Information:

Case No: BV05001590
Sub-Type: ENGINEER
Property Address: 1529 JEFFERSON AV
Proximity/Unit: 1529 JEFFERSON AVE
Days to Comply: 30

Date Inspected: 09/13/2005
Fees (if applicable): $0.00

Permit#: BR050008

You must take the necessary action(s) to correct or eliminate the violation(s) and **contact the Inspector listed below.** If you do not comply within **30 day(s)** from receipt of this notice, the City of Miami Beach Building Department will file charges and present this case before the governing agency having jurisdiction. If you intend to pull a permit in response to this violation, a copy of the violation notice must be supplied to the Building Department. Any fines or fees incurred from this violation that remain outstanding will result in a lien being placed on the property.

HERMINIA PEREZ
ENGINEERING INSPECTOR
305-673-7610 EXT 6165

Received By:

Signature: _____

Printed Name: _____

VIOLATION(S)

Unit: GENRL

ENGINEERING MISCELLANEOUS:

Failure to comply with the required Building Re-certification.

Posted 10/04/05


1529

CITY OF MIAMI BEACH
CITY HALL 1700 CONVENTION CENTER DRIVE MIAMI BEACH, FLORIDA 33139
www.ci.miami-beach.fl.us

Building Department

Telephone (305) 673-7610
Facsimile (305) 673-7857

STOP WORK ORDER / NOTICE OF VIOLATION

Violator:
STEPHEN MORSE
248 MOTT ST #18
NEW YORK NY
10012-

Owner:
STEPHEN MORSE
248 MOTT ST #18
NEW YORK NY
10012-

Case Information:

Case No: BV05001590
Sub-Type: ENGINEER
Property Address: 1529 JEFFERSON AV
Proximity/Unit: 1529 JEFFERSON AVE
Days to Comply: 30

Date Inspected: 09/13/2005
Fees (if applicable): $0.00

Permit#: BR050008

You must take the necessary action(s) to correct or eliminate the violation(s) and **contact the Inspector listed below.** If you do not comply within 30 day(s) . from receipt of this notice, the City of Miami Beach Building Department will file charges and present this case before the governing agency having jurisdiction. If you intend to pull a permit in response to this violation, a copy of the violation notice must be supplied to the Building Department. Any fines or fees incurred from this violation that remain outstanding will result in a lien being placed on the property.

Received By:

HERMINIA PEREZ
ENGINEERING INSPECTOR
305-673-7610

Signature: _____

Printed Name: _____

VIOLATION(S)

Unit: GENRL

ENGINEERING MISCELLANEOUS:

Failure to comply with the required Building Re-certification.

CITY OF MIAMI BEACH
BUILDING DEPARTMENT

COMMENTS LIST

09-14-2005

Activity Number: **BV05001590**

Site Address: **1529 JEFFERSON AV MBCH**

BUILPERH 09/14/2005 Case Created by BUILPERH (added by script)
BUILPERH 09/14/2005 Inspector changed from BUILPERH to BUILPERH (added by script)
BUILPERH 09/14/2005 Initial Inspector: Herminia Perez (added by script)
BUILPERH 09/14/2005 Violation was issued and will be posted. Failure to comply with the required Building Re-certification.

[COMMENTS]

BUILDING DEPARTMENT
1700 Convention Center Drive, 2nd Floor
Miami Beach, FL 33139
(305) 673-7610

Compliance dated 07/28/05

FINAL NOTICE

RECERTIFICATION OF BUILDINGS
40 YEAR OLD - DADE COUNTY ORDINANCE
#75-34 (Amended by Ordinance 92-1)

Certified Mail - Return Receipt Requested
Date Mail: 05/25/05
CM-7004-1160-0006-3298-9783

05-25-2005

STEPHEN MORSE
248 MOTT ST #18
NEW YORK NY 10012

RE: 1529 JEFFERSON AV MBCH
Parcel #: 32340021350
Activity #: BR050008

Dear Owner:

Our records reflect that you have been notified by this Department that the subject building is forty (40) years old. or older as of this year.

In accordance with Metropolitain Dade County, Ordinance No #75-34 (Amended by Ordinance 92-1, Section104.9) this building must be inspected by a florida Registered Architect or Engineer and a report furnished to this Office.

This is your **FINAL NOTICE**. A report must be submitted tothis Office within 10 days or Court Action will follow.

Any question you have pertaining to this matter may be directed to Carlos Fernandez at (305)-673-7000 Ext. 6797, Eric Perry Ext. 6117 or Moshen Jarapour Ext. 6770.

Very Truly Yours,

Engineering Inspector
Recertification Section
EXT 6165

Issue Final Notice

[BRECFIN]

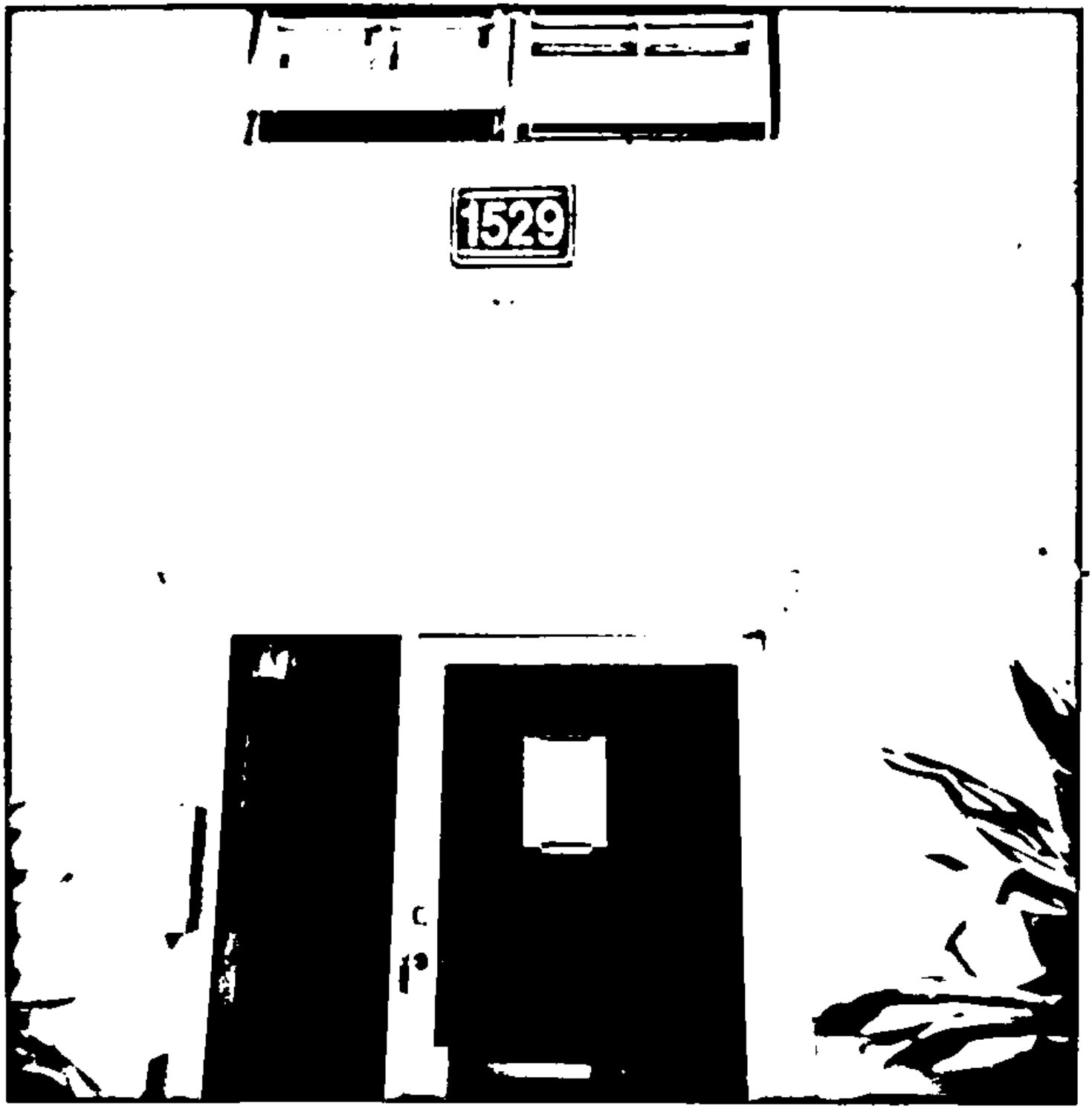

1529 Addison Ave
04/12/05 CEF

BUILDING DEPARTMENT
1700 Convention Center Drive, 2nd Floor
Miami Beach, FL 33139
(305) 673-7610

FINAL NOTICE

RECERTIFICATION OF BUILDINGS
40 YEAR OLD - DADE COUNTY ORDINANCE
#75-34 (Amended by Ordinance 92-1)

Certified Mail - Return Receipt Requested
Date Mail: 04/12/05

04-11-2005

MARDALL CORP
150 SE 25 RD #11B
MIAMI FL 33129

RE: 1529 JEFFERSON AV MBCH
Parcel #: 32340021350
Activity #: BR050008

Dear Owner:

Our records reflect that you have been notified by this Department that the subject building is forty (40) years old. or older as of this year.

In accordance with Metropolitain Dade County, Ordinance No #75-34 (Amended by Ordinance 92-1, Section104.9) this building must be inspected by a florida Registered Architect or Engineer and a report furnished to this Office.

This is your **FINAL NOTICE**. A report must be submitted tothis Office within 10 days or Court Action will follow.

Any question you have pertaining to this matter may be directed to Carlos Fernandez at (305)-673-7000 Ext. 6797, Eric Perry Ext. 6117 or Moshen Jarapour Ext. 6770.

Very Truly Yours,

Engineering Inspector
Recertification Section

[BRECFIN]