DEPARTMENT OF THE ARMY
CORPS OF ENGINEERS, JACKSONVILLE DISTRICT
701 SAN MARCO BOULEVARD
JACKSONVILLE, FLORIDA 32207-8175

March 3, 2023

Regulatory Division
South Area Branch
Antilles/Miami Section
SAJ-2022-01689(NW/GP-CNF)

Peter Luria
1800 W 23rd Street
Miami Beach, FL 33140
Sent via email: peterpl@bellsouth.net

Dear Mr. Luria:

The U.S. Army Corps of Engineers (Corps) has completed the review of your application for a Department of the Army permit received on August 12, 2022. Your application was assigned file number SAJ-2022-01689. The permittee is authorized to stabilize the shoreline and improve water access by conducting the following activities:

- Removal and replacement of existing 112.5 linear feet of concrete seawall panels with new panels and concrete cap at a maximum of 12 inches waterward of existing seawall;
- Installation of 15 14-inch square concrete seawall king piles and 14 14-inch square concrete batter piles;
- Replacement of existing 21 foot-5 inch x 10 foot-5 inch (223.2 Sq foot) fixed, marginal wood dock with four wood dock piles with a new 35 foot x 8 foot 4 inch (approx. 292 sq feet) fixed, marginal concrete dock with five 14-inch square concrete piles and 3 wood fender piles;
- Installation of a new 16 foot x 8 foot (128 square foot) floating vessel platform, anchored on the east side of new dock;
- Installation of a new aluminum boat lift with two 14-inch square concrete piles;
- Removal and replacement in the same footprint of approximately 22.9 cubic yards of existing 1-3 foot diameter limestone boulder riprap located along the base of the existing seawall at the west end of the seawall and;
- Installation of approximately 35 cubic yards of new 1-3 foot diameter limestone boulder riprap along the base of the new seawall extending a maximum of 8 feet waterward of the new seawall.

The activities subject to this permit are authorized pursuant to authorities under Section 10 of the Rivers and Harbors Act of 1899 (33 U.S.C. § 403), **and** Section 404 of

the Clean Water Act (33 U.S.C. § 1344) The project is located in Biscayne Bay at 1800 W 23rd Street, in Section 28, Township 53South, Range 42 East, Miami Beach, Dade County, Florida.

The aspect of your project involving a repair/replace of seawall and installation of riprap, as depicted on the attached drawings, is authorized by Nationwide Permit 13 (NWP-13), Bank Stabilization. Your project, as depicted on the enclosed drawings, is authorized by Nationwide Permit (NWP) 13 (Bank Stabilization). **This verification is valid until March 14, 2026.** In order for this NWP authorization to be valid, you must ensure that the work is performed in accordance with the Nationwide Permit General Conditions, the Jacksonville District Regional Conditions, and the General and Project-Specific Special Conditions listed below. Furthermore, if you commence or are under contract to commence this activity before the date that the relevant NWP is modified or revoked, you will have 12 months from the date of the modification or revocation of the NWP to complete the activity under the present terms and conditions of this NWP. You can access the U.S. Army Corps of Engineers' (Corps) Jacksonville District's Regulatory Source Book web page for links to view NWP information at: https://www.saj.usace.army.mil/Missions/Regulatory/Source-Book/. Please be aware this Internet address is case sensitive and should be entered as it appears above. Once there, you will need to select “Nationwide Permits.” Among other things, this part of the Source Book contains links to the federal register containing the text of the pertinent NWP authorization and the associated NWP general conditions, as well as separate links to the regional conditions applicable to the pertinent NWP verification.

The aspect of your project involving removal and replacement of the dock with a new floating vessel platform and a boatlift, as depicted on the attached drawings, is authorized by Regional General Permit (RGP) SAJ-20 and its subsequent modifications, if applicable. **This RGP authorization is valid until March 27 2023.** Please access the Corps' Jacksonville District Regulatory Division Source Book web page to view the special and general conditions for SAJ-20, which apply specifically to this authorization. The Internet URL address is: https://www.saj.usace.army.mil/Missions/Regulatory/Source-Book/. Please be aware this Internet address is case sensitive and you will need to enter it exactly as it appears above. Once there, select “General Permits.” Then you will need to select the specific SAJ permit noted above.

You must comply with all of the special and general conditions for the NWP and RGP, including any project-specific conditions included in this letter and all conditions incorporated by reference as described above.

General Conditions (33 CFR PART 320-330):

1. The time limit for completing the work authorized by NWP 13 ends on **March 14, 2026**. The time limit for completing the work authorized by RGP SAJ-20 ends on **March 27, 2023.**

2. You must maintain the activity authorized by this permit in good condition and in conformance with the terms and conditions of this permit. You are not relieved of this requirement if you abandon the permitted activity, although you may make a good faith transfer to a third party in compliance with General Condition 4 below. Should you wish to cease to maintain the authorized activity or should you desire to abandon it without a good faith transfer, you must obtain a modification of this permit from this office, which may require restoration of the area.

3. If you discover any previously unknown historic or archeological remains while accomplishing the activity authorized by this permit, you must immediately notify this office of what you have found. We will initiate the Federal and state coordination required to determine if the remains warrant a recovery effort of if the site is eligible for listing in the National Register of Historic Places.

4. If you sell the property associated with this permit you must obtain the signature of the new owner on the transfer form attached to this letter and forward a copy to this office to validate the transfer of this authorization.

5. If a conditioned water quality certification has been issued for your project, you must comply with the conditions specified in the certification as special conditions to this permit. For your convenience, a copy of the certification is attached if it contains such conditions.

6. You must allow a representative from this office to inspect the authorized activity at any time deemed necessary to ensure that it is being or has been accomplished in accordance with the terms and conditions of your permit.

Project Specific Special Conditions:

The following project specific special conditions are included with this verification:

1. **Reporting Address**

The Permittee shall submit all reports, notifications, documentation and correspondence required by the general and special conditions of this permit to either (not both) of the following addresses:

a. For electronic mail (preferred): SAJ-RD-Enforcement@usace.army.mil (not to exceed 15 MB).

b. For standard mail: U.S. Army Corps of Engineers, Regulatory Division, Enforcement Section, P.O. Box 4970, Jacksonville, FL 32232-0019.

The Permittee shall reference this permit number, **SAJ-2022-01689** (NW/GP), on all submittals.

2. **Self-Certification**

Within 60 days of completion of the work authorized by this permit, the Permittee shall complete the attached "Self-Certification Statement of Compliance" form (Attached) and submit it to the Corps. In the event that the completed work deviates in any manner from the authorized work, the Permittee shall describe the deviations between the work authorized by this permit and the work as constructed on the "Self-Certification Statement of Compliance" form. The description of any deviations on the "Self-Certification Statement of Compliance" form does not constitute approval of any deviations by the Corps

3. **Commencement Notice**

Within 10 days from the date of initiating the work authorized by this permit the Permittee shall submit a completed "Commencement Notification" Form (Attached).

4. **Assurance of Navigation and Maintenance**

The Permittee understands and agrees that, if future operations by the United States require the removal, relocation, or other alteration, of the structures or work herein authorized, or if in the opinion of the Secretary of the Army or his authorized representative, said structure or work shall cause unreasonable obstruction to the free navigation of the navigable waters, the Permittee will be required, upon due notice from the Corps of Engineers, to remove, relocate, or alter the structural work or obstructions caused thereby, without expense to the United States. No claim shall be made against the United States on account of any such removal or alteration.

5. **Manatee Conditions**

The Permittee shall comply with the "Standard Manatee Conditions for In-Water Work

– 2011” (Attached).

6. **Turbidity Barriers**

Prior to the initiation of any of the work authorized by this permit, the Permittee shall install floating turbidity barriers with weighted skirts that extend to within 1 foot of the bottom around all work areas that are in, or adjacent to, surface waters. The turbidity barriers shall remain in place and be maintained until the authorized work has been completed and all suspended and erodible materials have been stabilized. Turbidity barriers shall be removed upon stabilization of the work area.

7. **Posting of Permit**

The Permittee shall have available and maintain for review a copy of this permit and approved plans at the construction site.

8. **Agency Changes/Approvals**

Should any other agency require and/or approve changes to the work authorized or obligated by this permit, the Permittee is advised a re-verification to this permit instrument is required prior to initiation of those changes. It is the Permittee’s responsibility to request a re-verification of this permit from the Miami Permits Section. The Corps reserves the right to fully evaluate, amend, and approve or deny the request for re-verification of this permit.

9. **Historic Properties**

a. No structure or work shall adversely affect impact or disturb properties listed in the National Register of Historic Places (NRHP) or those eligible for inclusion in the NRHP.

b. If during the ground disturbing activities and construction work within the permit area, there are archaeological/cultural materials encountered which were not the subject of a previous cultural resources assessment survey (and which shall include, but not be limited to: pottery, modified shell, flora, fauna, human remains, ceramics, stone tools or metal implements, dugout canoes, evidence of structures or any other physical remains that could be associated with Native American cultures or early colonial or American settlement), the Permittee shall immediately stop all work and ground-disturbing activities within a 100-meter

diameter of the discovery and notify the Corps within the same business day (8 hours). The Corps shall then notify the Florida State Historic Preservation Officer (SHPO) and the appropriate Tribal Historic Preservation Officer(s) (THPO(s)) to assess the significance of the discovery and devise appropriate actions.

c. Additional cultural resources assessments may be required of the permit area in the case of unanticipated discoveries as referenced in accordance with the above Special Condition ; and if deemed necessary by the SHPO, THPO(s), or Corps, in accordance with 36 CFR 800 or 33 CFR 325, Appendix C (5). Based, on the circumstances of the discovery, equity to all parties, and considerations of the public interest, the Corps may modify, suspend or revoke the permit in accordance with 33 CFR Part 325.7. Such activity shall not resume on non-federal lands without written authorization from the SHPO for finds under his or her jurisdiction, and from the Corps.

d. In the unlikely event that unmarked human remains are identified on non-federal lands, they will be treated in accordance with Section 872.05 Florida Statutes. All work and ground disturbing activities within a 100-meter diameter of the unmarked human remains shall immediately cease and the Permittee shall immediately notify the medical examiner, Corps, and State Archeologist within the same business day (8-hours). The Corps shall then notify the appropriate SHPO and THPO(s). Based, on the circumstances of the discovery, equity to all parties, and considerations of the public interest, the Corps may modify, suspend or revoke the permit in accordance with 33 CFR Part 325.7. Such activity shall not resume without written authorization from the State Archeologist and from the Corps.

10. **Project Drawings**

The project must be completed in accordance with the enclosed construction drawings (pages 1-8), date-stamped by the U.S. Army Corps of Engineers (Corps) on 6 October 2022, and the general and special conditions which are incorporated in, and made a part of, the permit.

11. **Jacksonville District Programmatic Biological Opinion (JAXBO), November 2017, Project Design Criteria (PDCs)**

Structures authorized under this permit must comply with all applicable PDCs, based on the permitted activity, as required by JAXBO. Please note that failure to comply with

the applicable PDCs, where a take of listed species occurs, would constitute an unauthorized take, and noncompliance with this permit. The NMFS is the appropriate authority to enforce the terms and conditions of JAXBO. The most current version of JAXBO can be accessed at the Jacksonville District Regulatory Division internet webpage in the Endangered Species section of the Sourcebook located at: http://www.saj.usace.army.mil/Missions/Regulatory/SourceBook.aspx

Note - JAXBO may be subject to revision at any time. The most recent version of these conditions must be utilized during the design and construction of the permitted work. In accordance with the Endangered Species Act, and for those projects which do not comply with JAXBO, the Corps will seek individual consultation with the NMFS.

Note - some authorized activities may deviate from the PDCs. In cases, where the activity (i.e., structure dimensions, length, etc.) deviates from the PDCs, the permit drawings shall supersede the PDCs.

For each of the following authorized activities subject of this permit, the permittee shall adhere to the following PDCs, which are attached to, and made part of, this authorization/verification letter:

Activity 1 - Shoreline Stabilization: (AP.1-14; A1.1-12; S.1; S.2; S.4)
Activity 2 – Pile Supported Structure: (AP 2.2-17)

12. **Protected Species Construction Conditions.**

The Permittee agrees to abide by the enclosed standard construction conditions designed to protect species under the jurisdiction of NOAA Fisheries Southeast Regional Office (SERO) Protected Resources Division (PRD).

https://media.fisheries.noaa.gov/202106/Protected_Species_Construction_Conditions_1.pdf

This letter of authorization does not include conditions that would prevent the 'take' of a state-listed fish or wildlife species. These species are protected under sec. 379.411, Florida Statutes, and listed under Rule 68A-27, Florida Administrative Code. With regard to fish and wildlife species designated as species of special concern or threatened by the State of Florida, you are responsible for coordinating directly with the

Florida Fish and Wildlife Conservation Commission (FWC). You can visit the FWC license and permitting webpage (http://www.myfwc.com/license/wildlife/) for more information, including a list of those fish and wildlife species designated as species of special concern or threatened. The Florida Natural Areas Inventory (http://www.fnai.org/) also maintains updated lists, by county, of documented occurrences of those species.

This letter of authorization does not give absolute Federal authority to perform the work as specified on your application. The proposed work may be subject to local building restrictions mandated by the National Flood Insurance Program. You should contact your local office that issues building permits to determine if your site is located in a flood-prone area, and if you must comply with the local building requirements mandated by the National Flood Insurance Program.

This letter of authorization does not preclude the necessity to obtain any other Federal, State, or local permits, which may be required.

Thank you for your cooperation with our permit program. The Corps' Jacksonville District Regulatory Division is committed to improving service to our customers. We strive to perform our duty in a friendly and timely manner while working to preserve our environment. We invite you to complete our automated Customer Service Survey at https://regulatory.ops.usace.army.mil/customer-service-survey/. Please be aware this Internet address is case sensitive and you will need to enter it exactly as it appears above. Your input is appreciated – favorable or otherwise.

Should you have any questions related to this verification letter or have issues accessing the documents reference in this letter, please contact Catrina Frey at the letterhead address above, via telephone at 305-779-6058, or via e-mail at catrina.n.frey@usace.army.mil.

Sincerely,

Catrina Frey
Project Manager

Enclosures:
Manatee Construction Conditions
Self-Certification Form

Permit Transfer Form
Site plans date-stamped by the Corps on 06 October 2022

Cc:
Natalie Bryce, Cummins Cederberg, nbryce@cumminscederberg.com

1800 W 23RD STREET
SEAWALL & DOCK REPLACEMENT PROJECT

1800 W 23RD STREET
MIAMI BEACH, FL

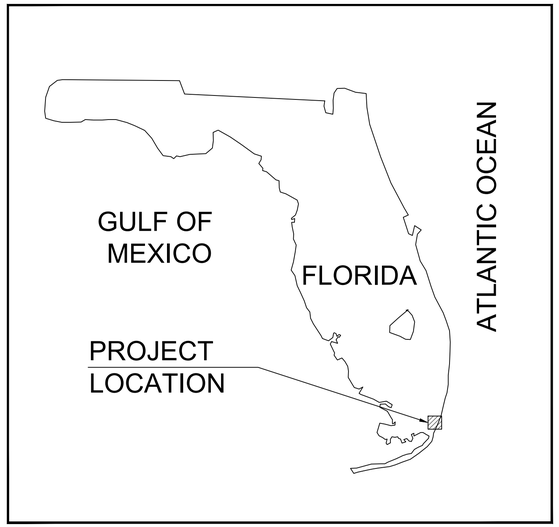

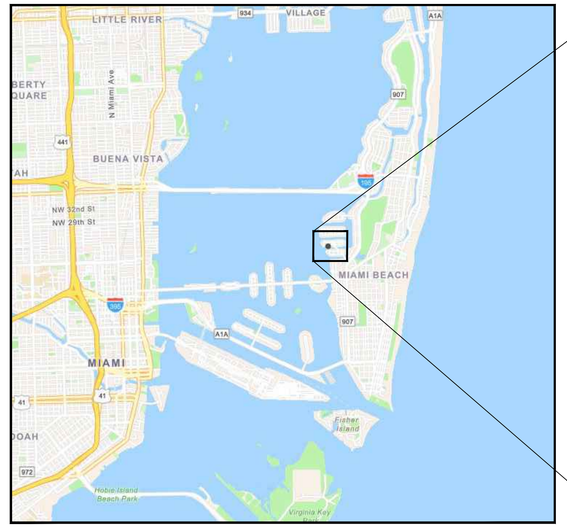

PROJECT LOCATION

SHEET INDEX	
SHEET NUMBER	TITLE
CM-1.0	COVER SHEET
CM-1.1	GENERAL NOTES
CM-1.2	EXISTING CONDITIONS & DEMOLITION PLAN
CM-2.0	PROPOSED SITE PLAN
CM-2.1	PROPOSED SEAWALL PLAN
CM-2.2	BULKHEAD SECTIONS
CM-2.3	BULKHEAD SECTIONS
CM-2.4	SECTIONS & DETAILS

CLIENT:

MR. PETER LURIA
1800 WEST 23rd STREET
MIAMI BEACH, FL 33140

ENGINEER:

CUMMINS | CEDERBERG
Coastal & Marine Engineering
Miami | Fort Lauderdale | Jupiter
Tallahassee | St. Petersburg
201 ALHAMBRA CIRCLE, SUITE 601
CORAL GABLES, FL 33134
T: +1 305-741-6155 F: +1 305-974-1969
www.cumminscederberg.com

U.S. Army Corps of Engineers
SAJ-2022-01689
10/6/2022
Project Manager: C Frey

811
KNOW WHAT'S BELOW
ALWAYS CALL 811
BEFORE YOU DIG
It's fast. It's free. It's the law.
www.callsunshine.com

REVISION:	DATE:	NOTE:

COVER

SHEET 1 OF 8
CM-1.0

J:\Projects\71900_1800_W_23rd_Street_(Luria)\Drawing\Working\(2022-09-09)_71900_1800_W_23RD.dwg

1. GENERAL

1.1. THE WORK CONSISTS OF PROVIDING ALL CONSTRUCTION, LABOR, EQUIPMENT, MATERIAL AND OPERATIONS IN CONNECTION WITH THE REPAIR OF THE SEAWALL AND RELATED IMPROVEMENTS AS SHOWN ON THESE DRAWINGS.

1.2. ANY DISCREPANCIES IN THE PLANS WITH THE FIELD CONDITIONS SHALL BE BROUGHT TO THE IMMEDIATE ATTENTION OF THE ENGINEER. CONSTRUCTION SHALL NOT CONTINUE UNTIL THE ENGINEER HAS ADDRESSED THE DISCREPANCIES.

1.3. THE CONTRACTOR SHALL TAKE ALL NECESSARY PRECAUTIONS TO PROTECT EXISTING STRUCTURES IN THE PROJECT VICINITY. ANY DAMAGE TO PRIVATE OR PUBLIC PROPERTY WITHIN THE PROJECT VICINITY, INCLUDING STAGING SITES, WORK AND ACCESS AREAS SHALL BE REPAIRED PROMPTLY BY THE CONTRACTOR. ANY DAMAGE AS A RESULT OF THE CONTRACTOR'S OPERATIONS SHALL BE REPAIRED AT NO COST TO THE OWNER. ALL ACCESS AND STAGING AREAS SHALL BE KEPT NEAT, ORDERLY AND IN A SAFE MANNER. ALL ACCESS AND STAGING AREAS SHALL BE RESTORED TO THE PRE-CONSTRUCTION CONDITION UPON PROJECT COMPLETION AT THE COST OF THE CONTRACTOR. THE SITE SHALL BE RESTORED BY REMOVING AND FINISHING ALL EVIDENCE FOR CONSTRUCTION. IN THE EVENT INFRASTRUCTURE (SUCH AS WALKWAYS, SIDEWALKS, FENCES, VEGETATION, ETC.) IS TEMPORARILY REMOVED OR RELOCATED OR THERE IS UNAUTHORIZED DAMAGE TO VEGETATION AND/OR FACILITIES BY THE CONTRACTOR, THE CONTRACTOR SHALL RESTORE ALL DAMAGE TO STRUCTURES AND NATURAL FEATURES TO PRE-CONSTRUCTION CONDITIONS OR BETTER.

1.4. UTILITIES ARE NOT SHOWN IN THE PLANS. CONTRACTOR IS RESPONSIBLE FOR LOCATING ALL PRESENT UTILITIES PRIOR TO CONSTRUCTION.

1.5. CONTRACTOR IS RESPONSIBLE FOR PROVIDING PROPER CLEARANCE AND PROTECTION TO ALL OVERHEAD WIRES AND OBSTRUCTIONS.

1.6. THE CONTRACTOR SHALL EXCLUDE THE PUBLIC FROM THE WORK AREAS IN THE IMMEDIATE VICINITY OF OPERATIONS. CONTRACTOR SHALL PROVIDE APPROPRIATE SAFETY MEASURES TO PROTECT THE PUBLIC.

1.7. ALL NEW STRUCTURAL WORK INCLUDING CONCRETE AND REINFORCEMENT SHALL BE ACCURATELY FIELD MEASURED AND DIMENSIONS VERIFIED BY THE CONTRACTOR PRIOR TO ORDERING MATERIALS. CONTRACTOR SHALL BE PREPARED TO MAKE FIELD ADJUSTMENTS TO ACCURATELY FIT THE NEW WORK TO EXISTING CONDITIONS.

1.8. NO CONSTRUCTION SHALL COMMENCE UNTIL ALL REQUIRED PERMITS AND APPROVALS HAVE BEEN SECURED AND THE CONTRACTOR HAS BEEN ISSUED NOTICE TO PROCEED.

1.9. ATTENTION IS DIRECTED TO THE FACT THAT THESE PLANS MAY HAVE BEEN CHANGED IN SIZE BY REPRODUCTION. THIS SHOULD BE CONSIDERED WHEN OBTAINING SCALED DATA.

1.10. CONSTRUCTION WORK SHALL BE EXECUTED IN ACCORDANCE WITH ALL LOCAL, STATE, AND NATIONAL BUILDING CODES AND GOVERNING REGULATIONS.FDEP, USACE, AND BROWARD COUNTY. CONTRACTOR SHALL ADHERE TO ALL CONDITIONS OF THE PERMITS AND EXEMPTIONS.

2. LAYOUT AND TESTING

2.1. ALL CONSTRUCTION STAKEOUT SHALL BE PERFORMED BY AND PAID FOR BY THE CONTRACTOR UNDER THE SUPERVISION OF A SURVEYOR REGISTERED IN THE STATE OF FLORIDA. ALL TESTING AND INSPECTION FOR CONCRETE MATERIALS SHALL BE IN ACCORDANCE WITH FDOT SPECIFICATIONS AND SHALL BE PERFORMED BY AN INDEPENDENT TESTING LABORATORY.

3. DEMOLITION

3.1. CONTRACTOR SHALL VERIFY THE EXTENTS, LOCATION AND QUANTITIES OF EXISTING ELEMENTS TO BE REMOVED.

3.2. ALL DEBRIS WITHIN THE LIMITS OF THE PROJECT SITE SHALL HAULED OFF SITE BY THE CONTRACTOR, AS DIRECTED BY THE OWNER, AND DISPOSED OF AT AN APPROPRIATE FACILITY.

3.3. CONTRACTOR SHALL NOT DAMAGE ANY STRUCTURAL COMPONENTS BEYOND THE DEMOLITION REQUIREMENTS DEPICTED IN THESE DRAWINGS. ANY DAMAGE SHALL BE REPAIRED AT THE CONTRACTOR'S EXPENSE.

3.4. ALL MATERIAL DISCARDED INTO THE WATER SHALL BE IMMEDIATELY REMOVED BY THE CONTRACTOR.

4. CONCRETE

4.1. FORMS FOR THIS WORK SHALL BE MADE OF EITHER WOOD OR METAL. THEY SHALL BE STRAIGHT AND FREE OF WARP OR BENDS. THEY SHALL HAVE SUFFICIENT STRENGTH AND RIGIDITY, WHEN STAKED, TO RESIST THE PRESSURE OF THE CONCRETE WITHOUT SPRINGING. IF WOODEN FORMS ARE USED, THEY SHALL BE OF ADEQUATE SECTION AND SHALL HAVE A FLAT SURFACE ON TOP. FORMS SHALL HAVE A DEPTH AT LEAST EQUAL TO THE VERTICAL DIMENSIONS FOR THE DEPTH OF THE CONCRETE BEING DEPOSITED AGAINST THEM. WHEN READY FOR THE CONCRETE TO BE DEPOSITED, THEY SHALL NOT VARY FROM THE APPROVED LINE AND GRADE, AND SHALL BE KEPT SO UNTIL THE CONCRETE HAS SET.

4.2. JUST PRIOR TO PLACING THE CONCRETE ANY WOODEN FORMS SHALL BE MOISTENED AND ALL STEEL REINFORCING SHALL BE RINSED WITH FRESH WATER. THE CONCRETE SHALL BE PLACED IN THE FORMS AND TAMPED IN PLACE SO THAT ALL HONEYCOMBS WILL BE ELIMINATED AND SUFFICIENT MORTAR BROUGHT TO A SMOOTH EVEN FINISH BY MEANS OF A FLOAT.

4.3. CONTRACTOR SHALL BE PREPARED TO PLACE CONCRETE OF LOWER MEMBERS OF THE MARINE STRUCTURES IN SUBMERGED CONDITIONS UTILIZING TREMIE METHODS AT NO ADDITIONAL COST.

4.4. NO CONCRETE SHALL BE POURED DURING UNFAVORABLE WEATHER OR SEA CONDITIONS.

4.5. ALL STEEL SHALL HAVE A MINIMUM OF 3 INCHES CONCRETE COVER, UNLESS OTHERWISE NOTED. NO CHAIRS OR OTHER METAL SHALL PROTRUDE FROM SURFACE OF CONCRETE.

4.6. CAST-IN-PLACE CONCRETE SHALL BE A MINIMUM OF 5,000 PSI COMPRESSIVE STRENGTH AT 28 DAYS. WATER CEMENT RATIO (W/C) SHALL BE LESS THAN OR EQUAL TO 0.4. PROVIDE MIX DESIGN FOR A CLASS IV CONCRETE FOR AN EXTREMELY AGGRESSIVE (MARINE) ENVIRONMENT IN ACCORDANCE WITH FDOT SPECIFICATIONS. PROVIDE SUFFICIENT AMOUNT OF FLY ASH AND SILICA FUME TO THE CEMENT CONTENT. CONTRACTOR SHALL PROVIDE MIX DESIGN TO ENGINEER FOR APPROVAL 10 DAYS PRIOR TO CONCRETE PLACEMENT.

4.7. NO WATER SHALL BE ADDED TO CONCRETE AT THE JOB SITE UNLESS AUTHORIZED BY THE ENGINEER OR SPECIAL INSPECTOR.

4.8. WHEN SURFACE FINISHING IS COMPLETED, THE STRUCTURE SHALL BE PROTECTED AGAINST WAVE SPLASH FOR TWO DAYS AND CURED PER APPLICABLE PARAGRAPHS OF SECTION 400-16 OF THE FDOT STANDARD SPECIFICATIONS. CURING SHALL OCCUR FOR AT LEAST 7 DAYS.

4.9. A SURFACE PENETRANT SEALER OF ALKYL-ALKOXY SILANE CLASSIFICATION, SUCH AS BASF ENVIROSEAL, OR APPROVED EQUAL SHALL BE APPLIED ALL EXPOSED CONCRETE.

4.10. APPLY SIKA ARMATEC 110 BONDING AGENT, OR APPROVED EQUAL, AT CONSTRUCTION JOINTS PRIOR TO PLACEMENT OF NEW CONCRETE.

U.S. Army Corps of Engineers
SAJ-2022-01689
10/6/2022
Project Manager: C Frey

4.11. COMPONENTS NOT CONSTRUCTED ACCORDING TO THESE SPECIFICATIONS SHALL BE REMOVED AND REPLACED PROPERLY AT THE EXPENSE OF THE CONTRACTOR.

4.12. THE FACES OF THE FINISHED STRUCTURES SHALL BE TRUE, STRAIGHT, AND OF UNIFORM WIDTH, FREE FROM HUMPS, SAGS, OR OTHER IRREGULARITIES EXCEPT AS SPECIFIED IN THE PLANS. THE CONTRACTOR SHALL REPLACE ANY DEFICIENT SEGMENTS.

4.13. CONCRETE FORMWORKERS AND FINISHERS:
THE CONTRACTOR SHALL SUPPLY A SUFFICIENT NUMBER OF EXPERIENCED CONCRETE FORMWORKERS AND FINISHERS IN ORDER TO COMPLETE THE WORK. A CONCRETE FOREMAN WHO HAS A THOROUGH UNDERSTANDİNG OF THE PLANS, SPECIFICATIONS, AND REFERENCED SPECIFICATIONS SHALL SUPERVISE ALL FORMWORKERS AND FINISHERS. NO SUB-STANDARD WORKMANSHIP WILL BE ACCEPTED.

4.14. CONCRETE TRANSPORTATION:
CONCRETE DELIVERED FROM A READY MIX PLANT SHALL BE TRANSPORTED IN ACCORDANCE TO FDOT SECTION 345-13. CONCRETE THAT IS NOT PLACED IN THE FORM WITHIN THE SPECIFIED TIME LIMITS WILL BE REJECTED AND NOT INCLUDED IN THE WORK. CONTRACTOR SHALL BEAR ALL COSTS FOR REJECTED CONCRETE. CONCRETE SHALL NOT BE PLACED IN THE FORMS UNTIL THE REINFORCING STEEL PLACEMENT HAS BEEN APPROVED BY THE ENGINEER.

4.15. REINFORCED CONCRETE MATERIALS TESTING:
THE CONTRACTOR SHALL HAVE AN INDEPENDENT TESTING LABORATORY TEST THE CONCRETE USED IN THE WORK. THE TEST SHALL INCLUDE 7, 14, AND 28 DAY COMPRESSIVE STRENGTH TESTS. THE RESULTS SHALL BE SUPPLIED TO THE ENGINEER. THE TESTS SHALL BE IN ACCORDANCE WITH ASTM C31, C39, AND C617.

4.16. ADHESIVE BONDED DOWELS SHALL BE INSTALLED IN ACCORDANCE WITH FDOT SECTION 416.

5. PRECAST PILING

5.1. 14" SQUARE PRESTRESSED CONCRETE PILES SHALL BE WITH EIGHT (8) 0.6" DIAMETER STRANDS, GRADE 270 L.R.S.

5.2. PILES MAY BE PRE-PUNCHED BUT SHALL BE DRIVEN TO FINAL TIP ELEVATION.

5.3. CONCRETE TO BE MINIMUM 6,000 PSI, AND FOLLOW FDOT CLASS-V CONCRETE SPECIFICATIONS. MINIMUM COVER TO INTERNAL REINFORCEMENT SHALL BE 3" ON ALL SIDES.

5.4. PILES SHALL BE DRIVEN TO A MINIMUM OF 12 FEET INTO FIRM MATERIAL OR TO THE TIP ELEVATION SHOWN IN THE DRAWINGS, WHICHEVER IS DEEPER. NOTIFY ENGINEER IF PRACTICAL REFUSAL IS ENCOUNTERED PRIOR.

5.5. INDICATOR PILE LOG(S) SHALL BE SUBMITTED TO EOR FOR CONFIRMATION OF PRODUCTION PILE LENGTH AND MINIMUM BEARING CAPACITY.

5.6. 14" SQUARE PRESTRESSED CONCRETE PILES SHALL PROVIDE A MINIMUM BEARING CAPACITY OF 40 TONS/PILE.

5.7. PILE LOGS SHALL BE RECORDED FOR ALL DRIVEN PILES.

5.8. PILES SHALL BE CUT OFF AS SHOWN ON THE PLANS AND SECTIONS HEREIN ONLY AFTER ENGINEER'S APPROVAL.

5.9. CONTRACTOR TO SUBMIT SHOP DRAWINGS FOR CONCRETE PILES.

6. FIBER REINFORCED POLYMER (FRP) REINFORCEMENT

6.1. GLASS FIBER REINFORCED POLYMER (GFRP) PER FDOT SPECIFICATIONS, SECTIONS 932-3, APPLICABLE TO PRECAST CONCRETE PANEL AND ALL CIP COMPONENTS EXCEPT PILING.

6.2. GLASS FIBER REINFORCED POLYMER SHALL BE NEW AND ROUND CONFORMING TO ASTM D7957 AND MEET MINIMUM TENSILE MODULUS OF ELASTICITY OF 8700 KSI.

7. TIDAL DATA

7.1. CONTRACTOR MAY NEED TO ADJUST HIS WORK PLAN TO ACCOUNT FOR ACTUAL WATER LEVELS AND CHANGING WATER LEVELS. THE SITE MAY BE SUBJECT TO VARIABLE WAVE AND SURGE CONDITIONS AND IT IS THE RESPONSIBILITY OF THE CONTRACTOR TO PROVIDE TEMPORARY SUPPORT FOR MARINE STRUCTURES AND SHORELINE DURING CONSTRUCTION. TIDAL DATA OBTAINED FROM MIAMI BEACH, FLORIDA STATION ID 8723170.

6. TURBIDITY CONTROL

6.1. TURBIDITY BARRIERS SHALL BE AS REQUIRED BY PERMITS. IF REQUIRED, TURBIDITY BARRIERS SHALL REMAIN IN PLACE UNTIL TURBIDITY LEVELS FALL WITHIN STATE AND COUNTY STANDARDS ABOVE BACKGROUND.

7. SUBMITTALS

7.1. REVIEW OF SUBMITTALS BY THE STRUCTURAL ENGINEER IS FOR GENERAL CONFORMANCE WITH THE DESIGN CONCEPT AS PRESENTED BY THE CONTRACT DOCUMENTS. NO DETAILED CHECK OF QUANTITIES OR DIMENSIONS WILL BE MADE.

7.2. ALL SHOP DRAWINGS MUST BEAR EVIDENCE OF THE CONTRACTOR'S APPROVAL PRIOR TO SUBMITTING TO EOR.

7.3. THE FOLLOWING MINIMUM SUBMITTALS SHALL BE PREPARED BY THE CONTRACTOR AND SUBMITTED TO THE ENGINEER FOR REVIEW AND APPROVAL PRIOR TO RELATED CONSTRUCTION ACTIVITY:

- 7.3.1. SCHEDULE FOR COMPLETION OF WORK WITH TASKS AND DURATIONS DEFINED
- 7.3.2. CONCRETE MIX
- 7.3.3. REINFORCING
- 7.3.4. MARINE HARDWARE

8. DESIGN CODES & STANDARDS

8.1. FBC 2020
8.2. ACI 440-1R-15
8.3. AASHTO LFRD BRIDGE DESIGN GUIDE SPECIFICATIONS FOR GFRP - REINFORCED CONCRETE 2018
8.4. ACI 318-14
8.5. FDOT STANDARD SPECIFICATIONS FOR ROAD & BRIDGE CONSTRUCTION

9. DESIGN LOADS

- BULKHEAD SURCHARGE LL= 100 PSF
- VESSEL LENGTH, LOA= 40 FT
- DESIGN IN ACCORDANCE WITH 2017 FBC, ACI 318-14, ASCE 7-10, FDOT STANDARD SPECIFICATIONS FOR ROAD & BRIDGE CONSTRUCTION
- OCCUPIED WIND Vasd: 40 MPH SUSTAINED
- UNOCCUPIED WIND Vult: 165 MPH (Vasd: 128 MPH)
  RISK CAT I
  EXPOSURE C
  GCpi: 0

SYMBOLS LEGEND

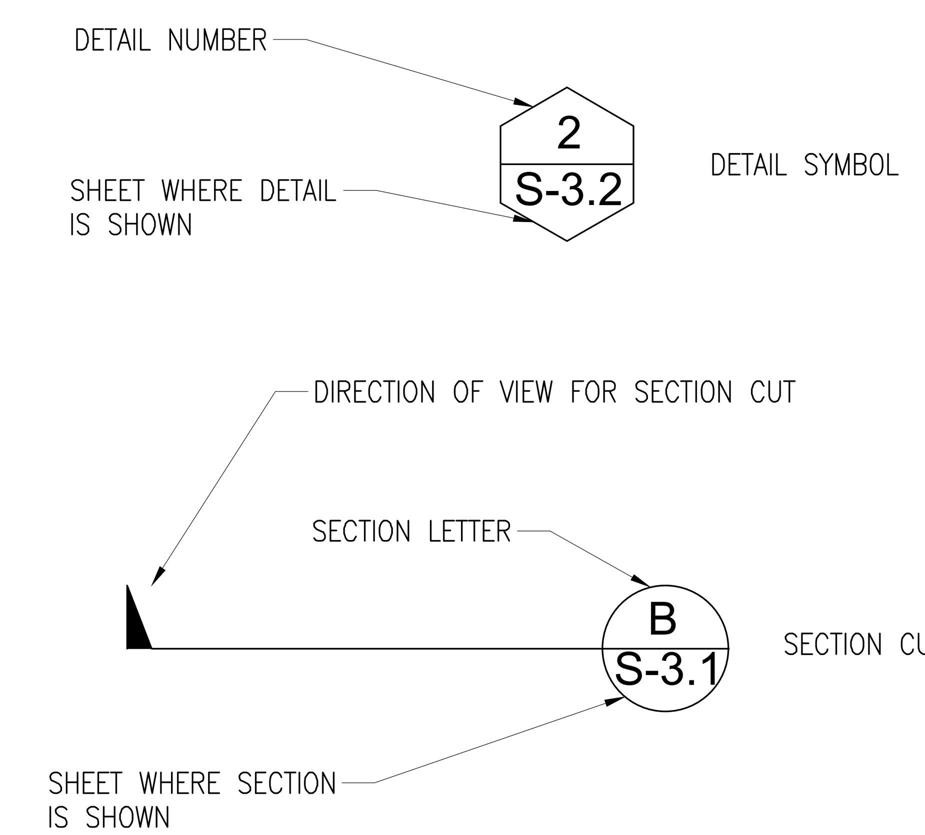

VERTICAL DATUM
Station 8723170

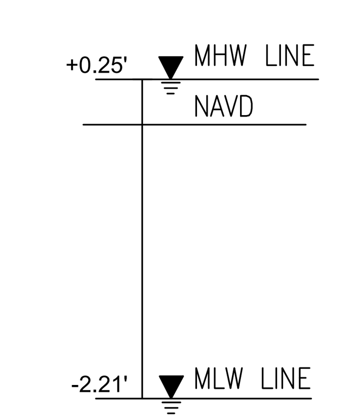

PROJECT:
1800 W 23RD STREET SEAWALL & DOCK REPLACEMENT PROJECT

CLIENT:
MR. PETER LURIA
800 WEST 23rd STREET
MIAMI BEACH, FL 33140

ENGINEER:
CUMMINS | CEDERBERG
Coastal & Marine Engineering
201 ALHAMBRA CIRCLE, SUITE 601
CORAL GABLES, FL 33134
TEL: +1 305 741-6155 FAX: +1 305-974-1969
WWW.CUMMINSCEDERBERG.COM
COA # 29062

SEAL:
FOR REGULATORY REVIEW.
NOT FOR CONSTRUCTION
LEONARD BARRERA ALLEN, P.E. #90872

SUBMISSION / REVISION | DATE | ISSUE

CC PROJECT NO:	71900
DRAWN	JDR
CHECKED	JT/KC
SCALE	AS SHOWN

SHEET TITLE
GENERAL NOTES

SHEET 2 OF 8
CM-1.1

J:\Projects\71900 1800 W 23rd Street (Luria)\Drawing\Working\(2022-09-09) 71900 _1800_W_23RD.dwg

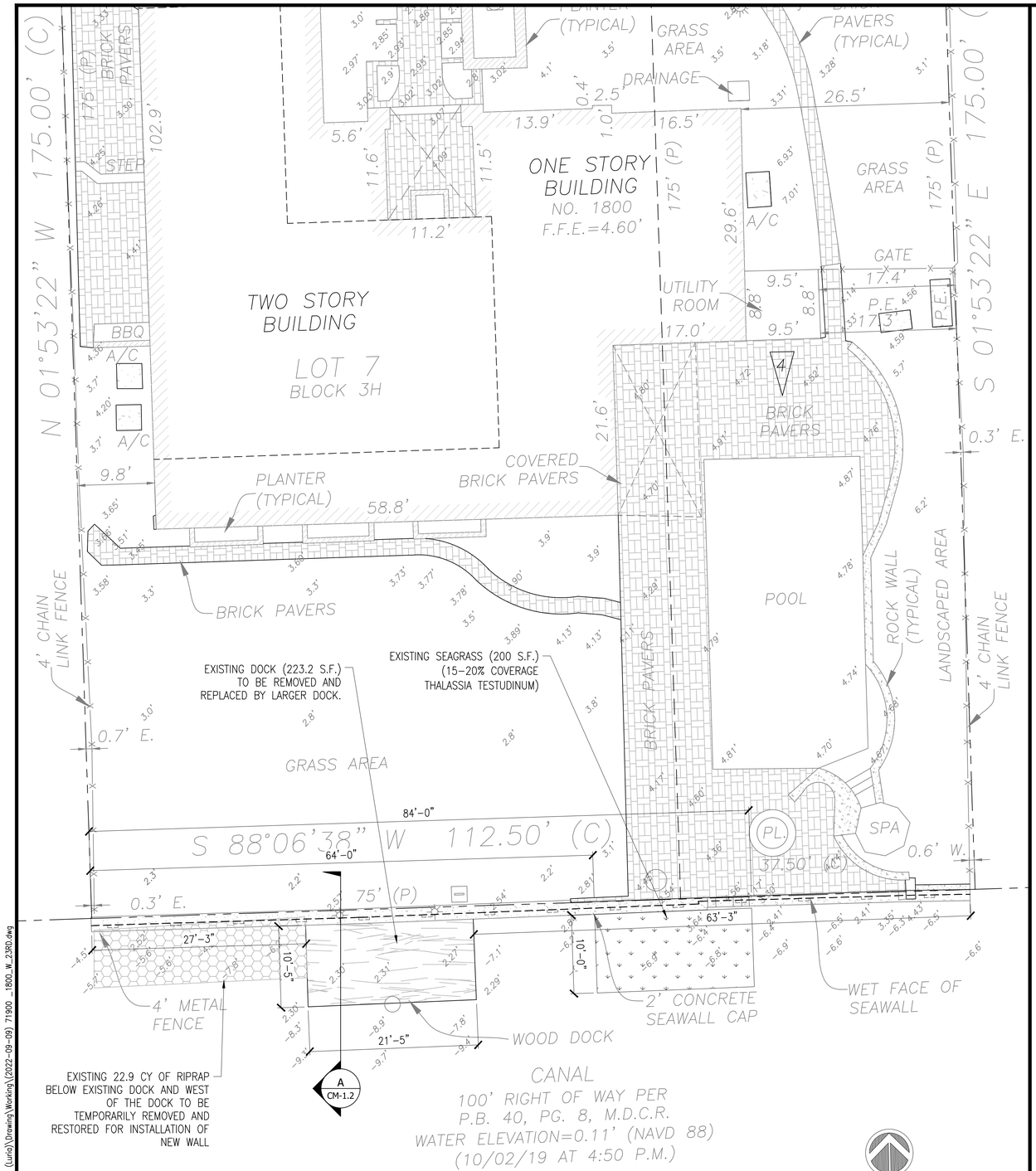

EXISTING CONDITIONS AND DEMOLITION PLAN

SCALE: 1"=8'

GRAPHIC SCALE
22X34: 1"=8'
11X17: 1"=16'

U.S. Army Corps of Engineers
SAJ-2022-01689
10/6/2022
Project Manager: C Frey

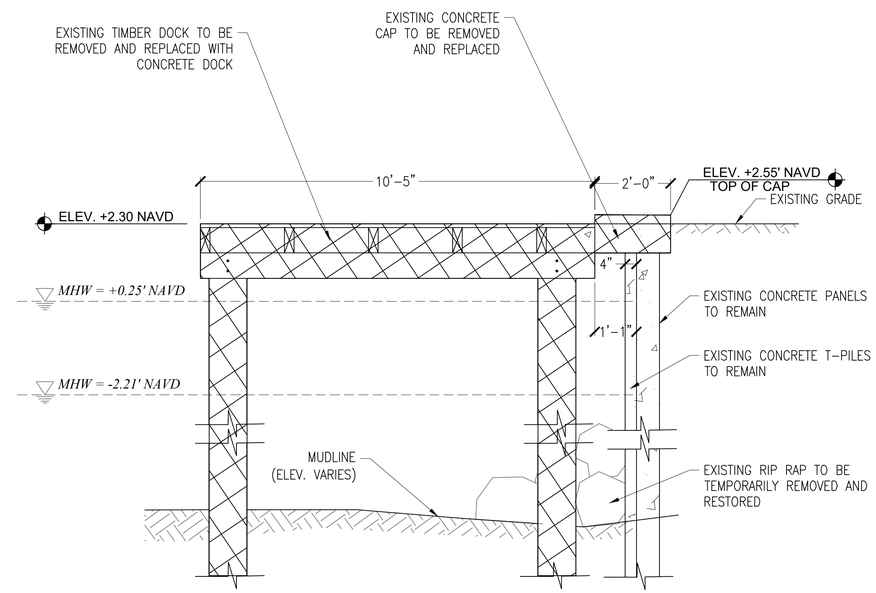

TYPICAL EXISTING SECTION

A CM-1.2

SCALE: 1"=2'

PROJECT:
1800 W 23RD STREET SEAWALL & DOCK REPLACEMENT PROJECT

CLIENT:
MR. PETER LURIA
800 WEST 23rd STREET
MIAMI BEACH, FL 33140

ENGINEER:
CUMMINS | CEDERBERG
Coastal & Marine Engineering
201 ALHAMBRA CIRCLE, SUITE 601
CORAL GABLES, FL 33134
TEL: +1 305 741-6155 FAX: +1 305-974-1969
WWW.CUMMINSCEDERBERG.COM
COA # 29062

SEAL:
FOR REGULATORY REVIEW. NOT FOR CONSTRUCTION
LEONARD BARRERA ALLEN, P.E. #90872

ISSUE	DATE	SUBMISSION / REVISION

CC PROJECT NO:	71900
DRAWN	JDR
CHECKED	JT/KC
SCALE	AS SHOWN

SHEET TITLE
EXISTING CONDITIONS AND DEMOLITION PLAN

SHEET 3 OF 8

CM-1.2

J:\Projects\71900 1800 W 23rd Street (Luria)\Drawing\Working\(2022-09-09) 71900 _1800_W_23RD.dwg

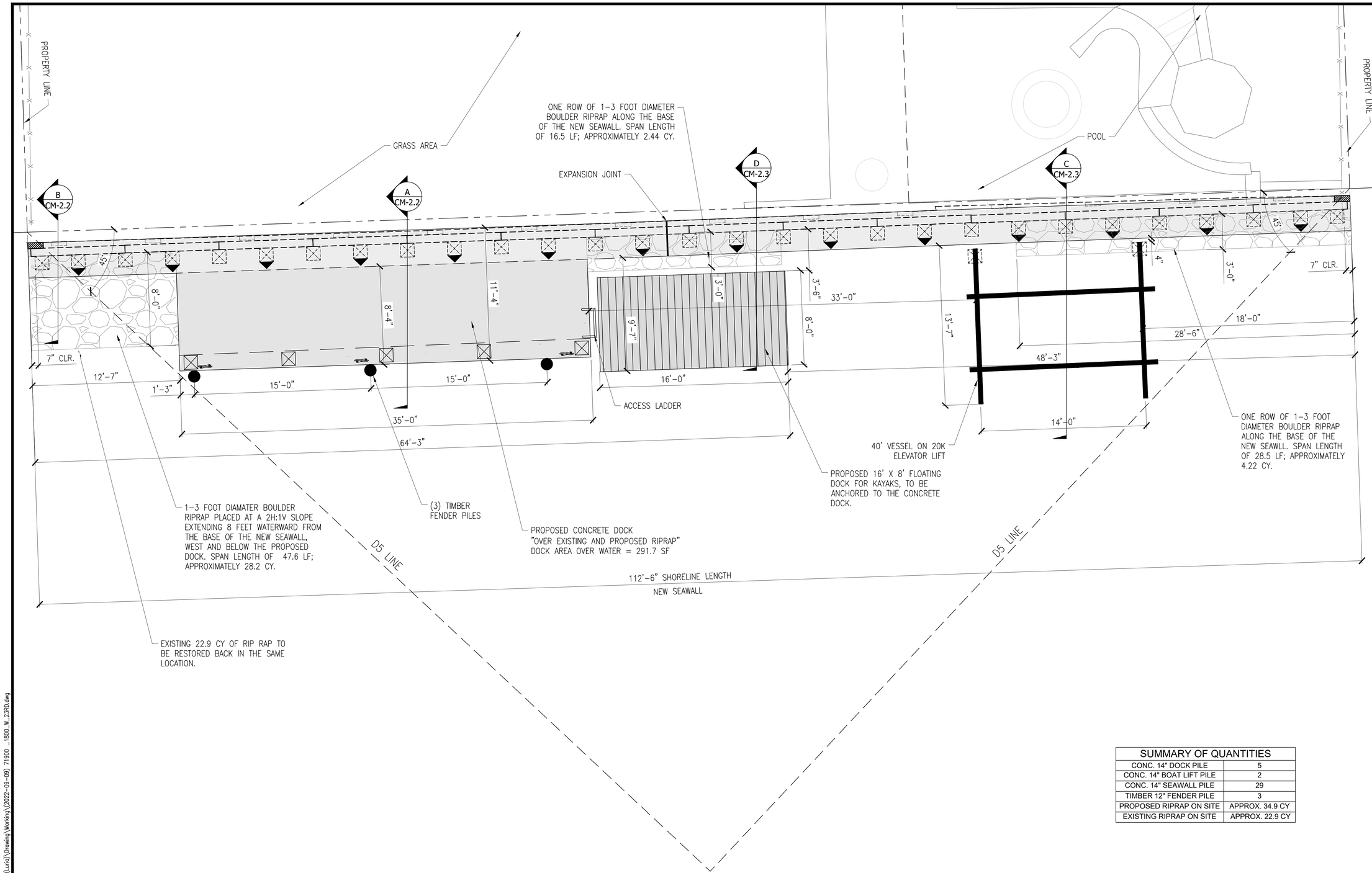

SUMMARY OF QUANTITIES	
CONC. 14" DOCK PILE	5
CONC. 14" BOAT LIFT PILE	2
CONC. 14" SEAWALL PILE	29
TIMBER 12" FENDER PILE	3
PROPOSED RIPRAP ON SITE	APPROX. 34.9 CY
EXISTING RIPRAP ON SITE	APPROX. 22.9 CY

U.S. Army Corps of Engineers
SAJ-2022-01689
10/6/2022
Project Manager: C Frey

PROPOSED SITE PLAN

0 4 8
GRAPHIC SCALE
22X34: 1"=4'
11X17: 1"=8'

PROJECT:
1800 W 23RD STREET SEAWALL & DOCK REPLACEMENT PROJECT

CLIENT:
MR. PETER LURIA
800 WEST 23rd STREET
MIAMI BEACH, FL 33140

ENGINEER:
CUMMINS | CEDERBERG
Coastal & Marine Engineering
201 ALHAMBRA CIRCLE, SUITE 601
CORAL GABLES, FL 33134
TEL: +1 305 741-6155 FAX: +1 305-974-1969
WWW.CUMMINSCEDERBERG.COM
COA # 29062

SEAL:
FOR REGULATORY REVIEW. NOT FOR CONSTRUCTION
LEONARD BARRERA ALLEN, P.E. #90872

ISSUE	DATE	SUBMISSION / REVISION

CC PROJECT NO:	71900
DRAWN	JDR
CHECKED	JT/KC
SCALE	AS SHOWN

SHEET TITLE
PROPOSED SITE PLAN

SHEET 4 OF 8
CM-2.0

J:\Projects\71900 1800 W 23rd Street (Luria)\Drawing\Working\(2022-09-09) 71900 _1800_W_23RD.dwg

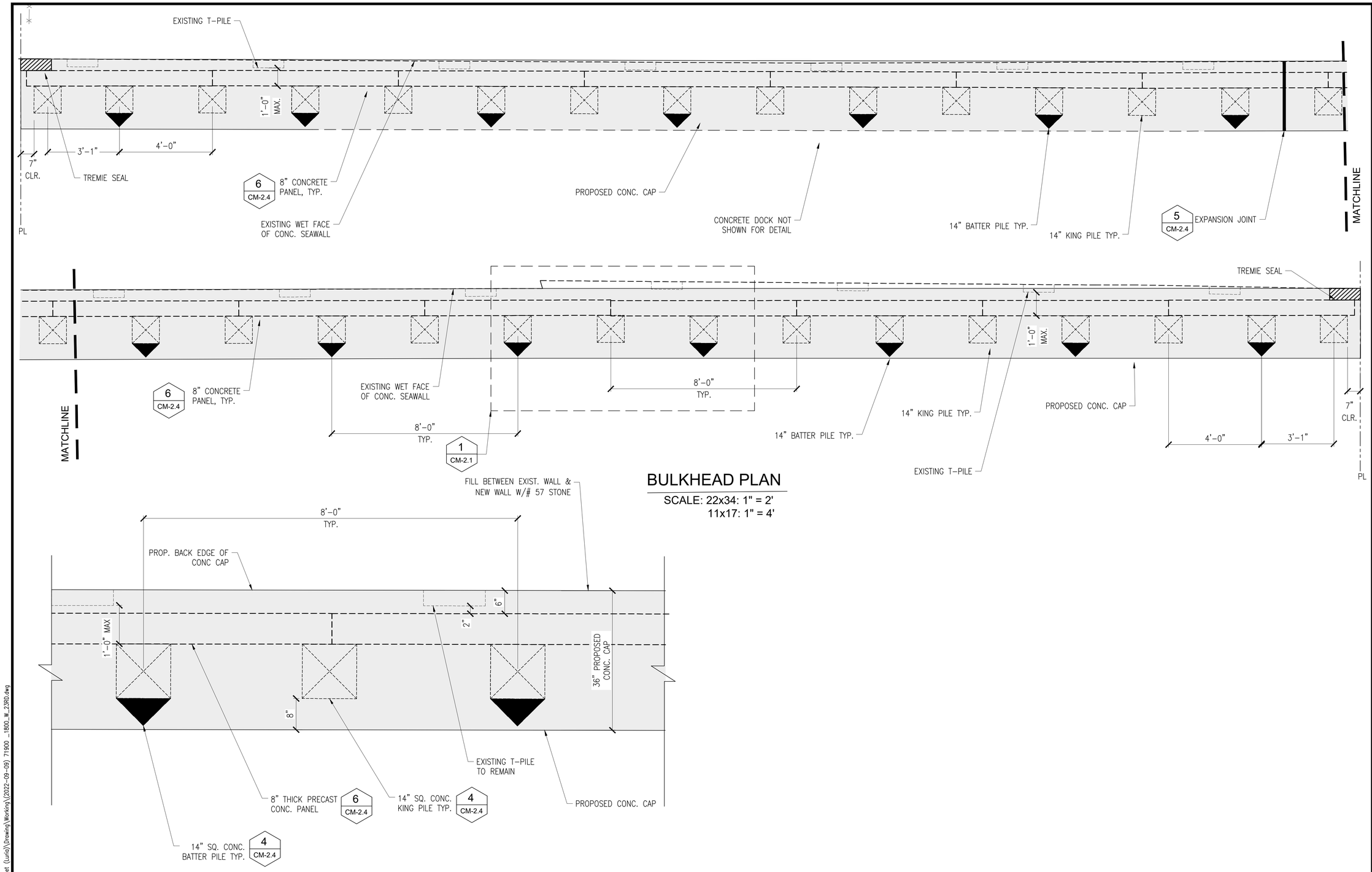

BULKHEAD PLAN

SCALE: 22x34: 1" = 2'
11x17: 1" = 4'

BULKHEAD PARTIAL PLAN

1 CM-2.1

SCALE: 22x34: 1" = 1'
11x17: 1" = 2'

U.S. Army Corps of Engineers
SAJ-2022-01689
10/6/2022
Project Manager: C Frey

SUMMARY OF QUANTITIES	
CONC. 14" KING PILE	15
CONC. 14" BATTER PILE	14

PROJECT:
1800 W 23RD STREET SEAWALL & DOCK REPLACEMENT PROJECT

CLIENT:
MR. PETER LURIA
800 WEST 23rd STREET
MIAMI BEACH, FL 33140

ENGINEER:
CUMMINS | CEDERBERG
Coastal & Marine Engineering
201 ALHAMBRA CIRCLE, SUITE 601
CORAL GABLES, FL 33134
TEL: +1 305 741-6155 FAX: +1 305-974-1969
WWW.CUMMINSCEDERBERG.COM
COA # 29062

SEAL:
FOR REGULATORY REVIEW. NOT FOR CONSTRUCTION
LEONARD BARRERA ALLEN, P.E. #90872

SUBMISSION / REVISION	DATE	ISSUE

CC PROJECT NO:	71900
DRAWN	JDR
CHECKED	JT/KC
SCALE	AS SHOWN

SHEET TITLE
PROPOSED SEAWALL PLAN

SHEET 5 OF 8
CM-2.1

J:\Projects\71900_1800 W 23rd Street (Luria)\Drawing\Working\(2022-09-09) 71900 _1800_W_23RD.dwg

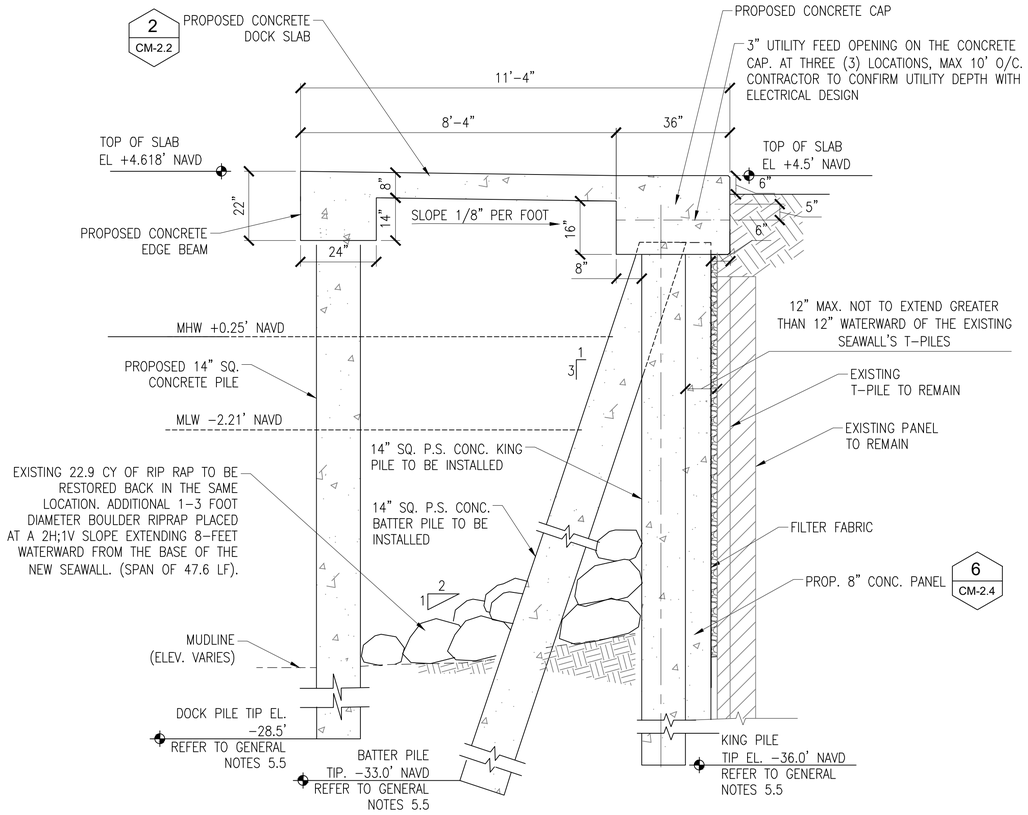

SEAWALL & DOCK CROSS SECTION

A
CM-2.0

SCALE: 22x34: 1" = 2'
11x17: 1" = 4'

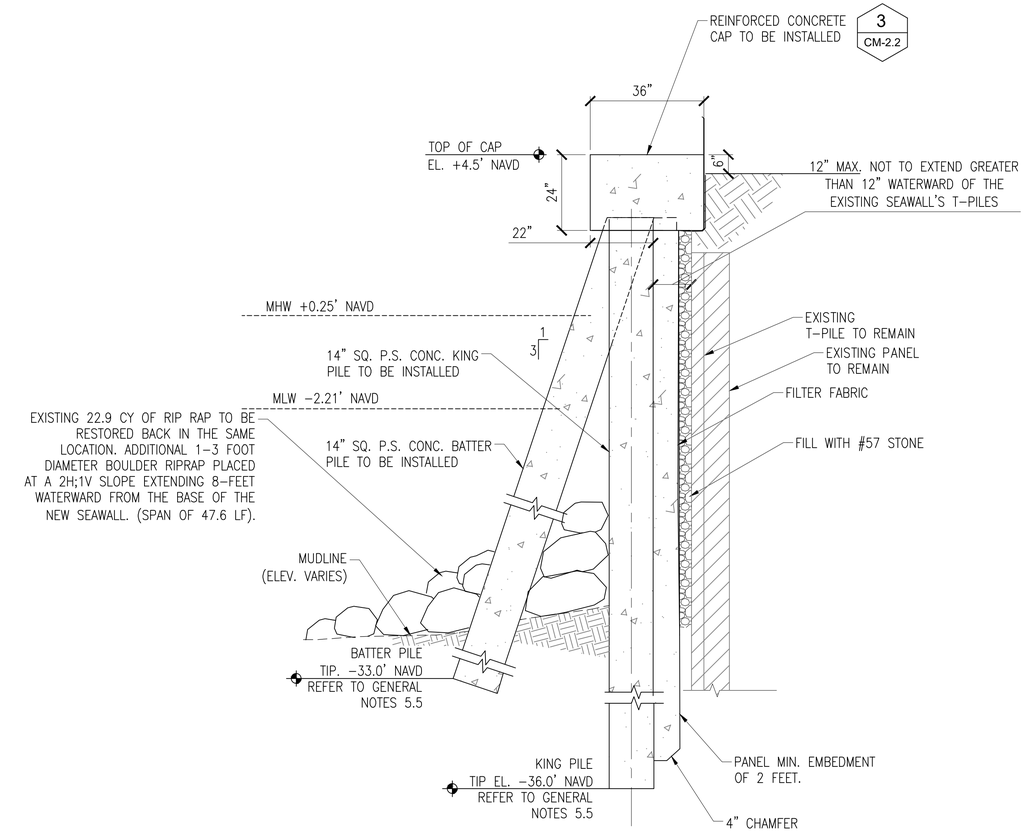

SEAWALL CROSS SECTION

B
CM-2.0

SCALE: 22x34: 1" = 2'
11x17: 1" = 4'

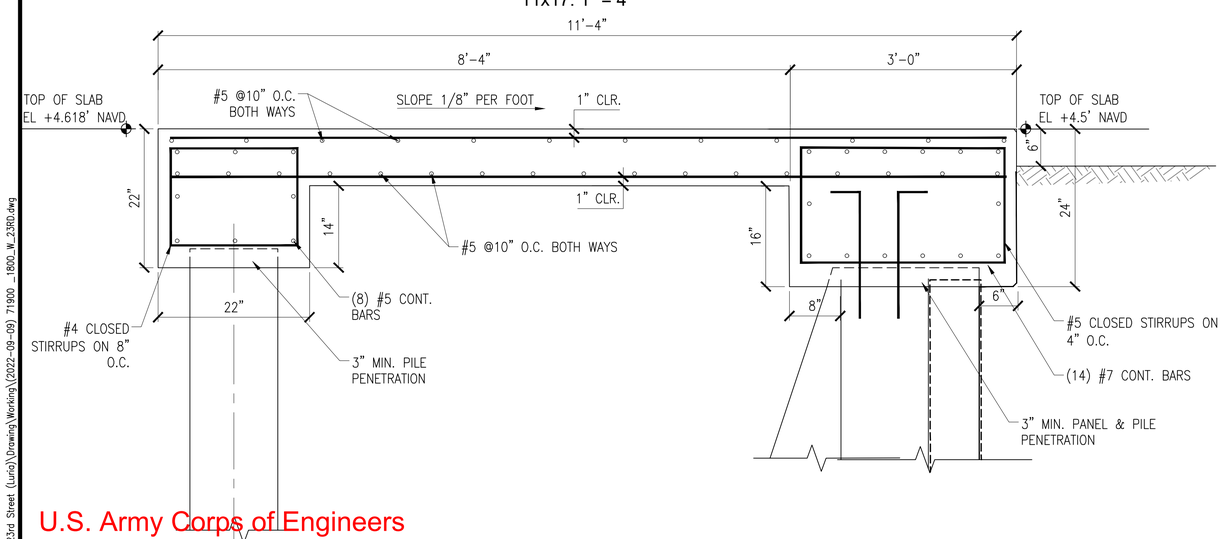

GFRP REINFORCING DETAIL

2
CM-2.2

SCALE: 22x34: 1" = 1'
11x17: 1" = 2'

7
CM-2.4

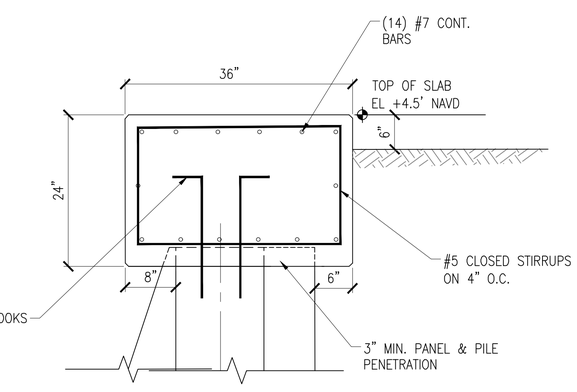

GFRP REINFORCING DETAIL

3
CM-2.2

SCALE: 22x34: 1" = 1'
11x17: 1" = 2'

U.S. Army Corps of Engineers
SAJ-2022-01689
10/6/2022
Project Manager: C Frey

J:\Projects\71900 1800 W 23rd Street (Luria)\Drawing\Working\(2022-09-09) 71900 _1800_W_23RD.dwg

PROJECT:
1800 W 23RD STREET SEAWALL & DOCK REPLACEMENT PROJECT

CLIENT:
MR. PETER LURIA
800 WEST 23rd STREET
MIAMI BEACH, FL 33140

ENGINEER:
CUMMINS | CEDERBERG
Coastal & Marine Engineering
201 ALHAMBRA CIRCLE, SUITE 601
CORAL GABLES, FL 33134
TEL: +1 305 741-6155 FAX: +1 305-974-1969
WWW.CUMMINSCEDERBERG.COM
COA # 29062

SEAL:
FOR REGULATORY REVIEW. NOT FOR CONSTRUCTION
LEONARD BARRERA ALLEN, P.E. #90872

ISSUE	DATE	SUBMISSION / REVISION

CC PROJECT NO:	71900
DRAWN	JDR
CHECKED	JT/KC
SCALE	AS SHOWN

SHEET TITLE
BULKHEAD SECTIONS

SHEET 6 OF 8
CM-2.2

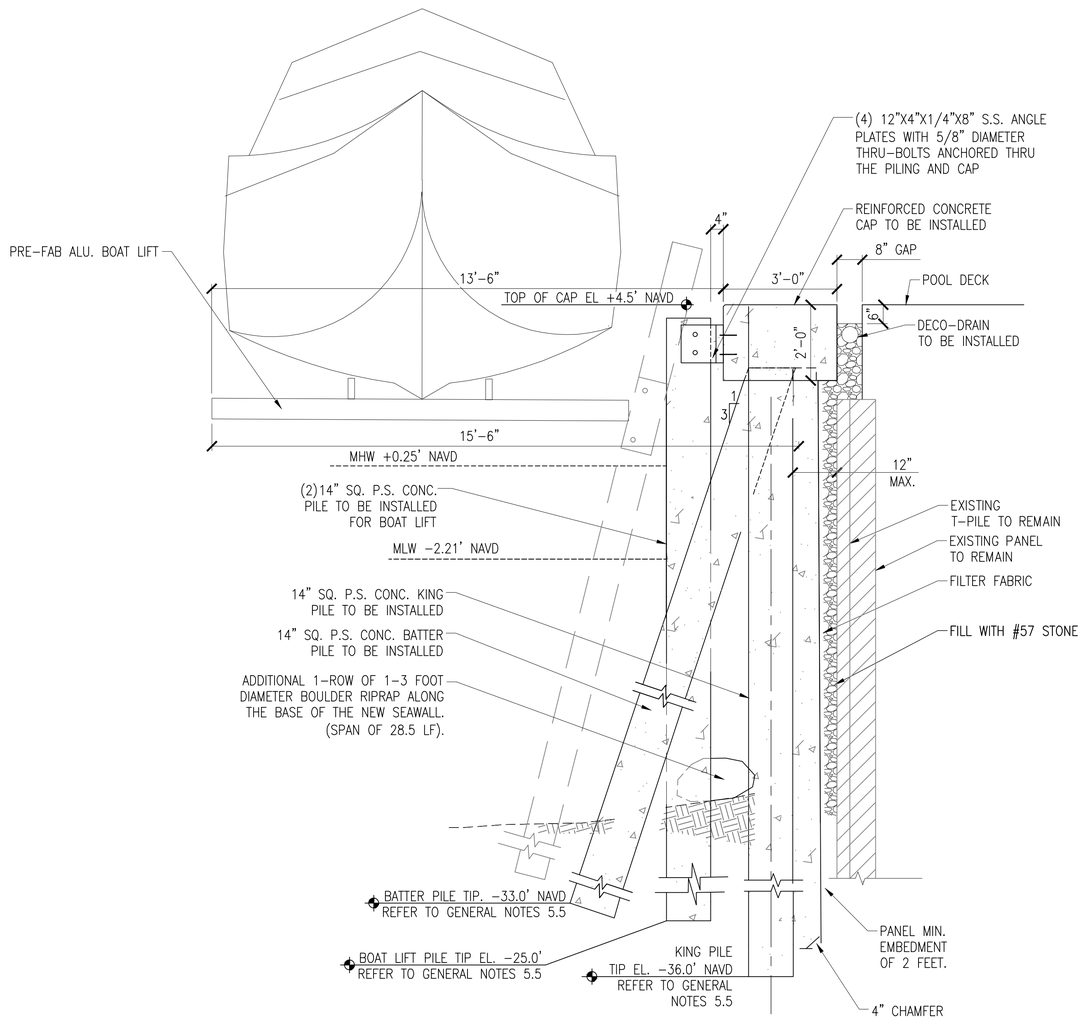

SEAWALL & BOAT LIFT CROSS SECTION

C / CM-2.0

SCALE: 22x34: 1" = 2'
11x17: 1" = 4'

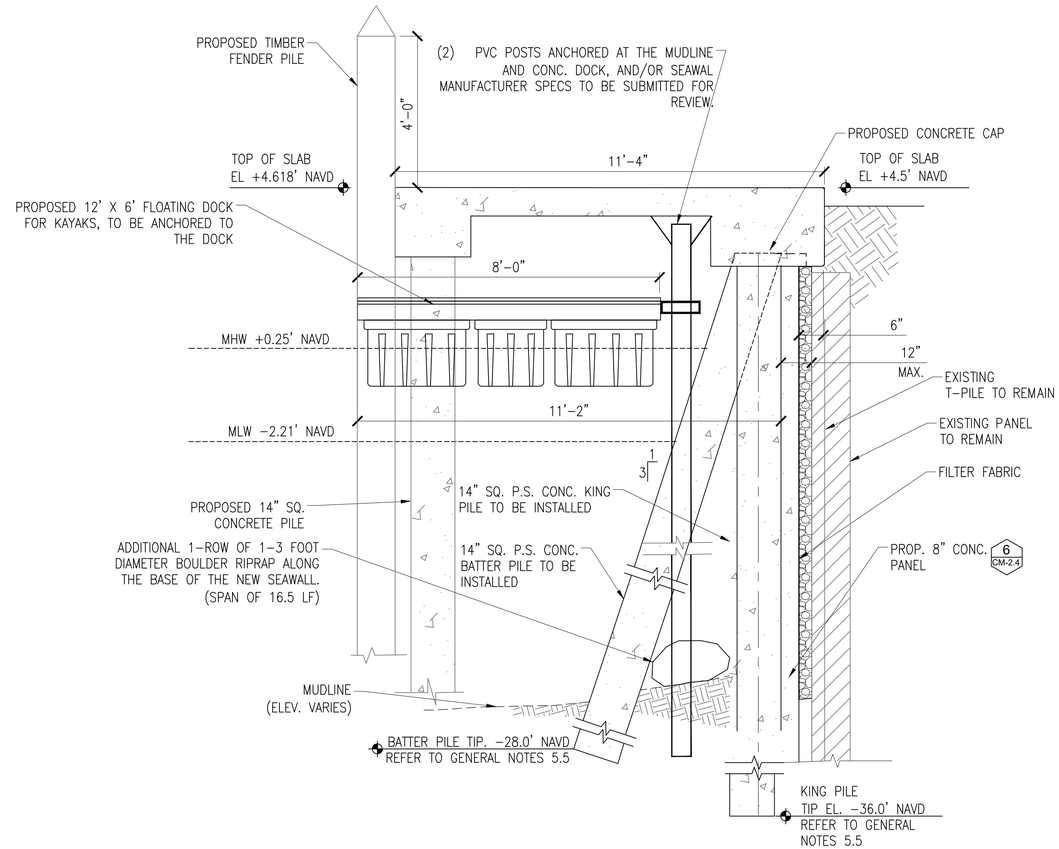

SEAWALL & FVP CROSS SECTION

D / CM-2.0

SCALE: 22x34: 1" = 2'
11x17: 1" = 4'

U.S. Army Corps of Engineers
SAJ-2022-01689
10/6/2022
Project Manager: C Frey

J:\Projects\71900 1800 W 23rd Street (Luria)\Drawing\Working\(2022-09-09) 71900 _1800_W_23RD.dwg

PROJECT:
1800 W 23RD STREET SEAWALL & DOCK REPLACEMENT PROJECT

CLIENT:
MR. PETER LURIA
800 WEST 23rd STREET
MIAMI BEACH, FL 33140

ENGINEER:
CUMMINS | CEDERBERG
Coastal & Marine Engineering
201 ALHAMBRA CIRCLE, SUITE 601
CORAL GABLES, FL 33134
TEL: +1 305 741-6155 FAX: +1 305-974-1969
WWW.CUMMINSCEDERBERG.COM
COA # 29062

SEAL:
FOR REGULATORY REVIEW. NOT FOR CONSTRUCTION
LEONARD BARRERA ALLEN, P.E. #90872

ISSUE	DATE	SUBMISSION / REVISION

CC PROJECT NO:	71900
DRAWN	JDR
CHECKED	JT/KC
SCALE	AS SHOWN

SHEET TITLE
BULKHEAD SECTIONS

SHEET 7 OF 8
CM-2.3

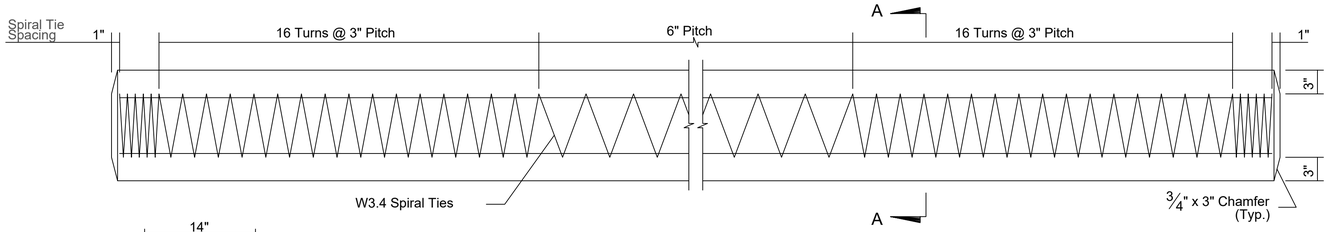

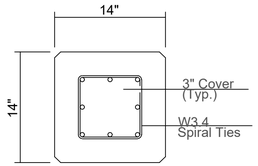

SECTION A-A

CONCRETE PILE DETAIL

SCALE: NTS

4 / CM-2.1

14"x14" PILE SPECIFICATION:

1. Fc' = 6,000 PSI (MIN)
2. (8) 0.6" DIA, GRADE 270 LRS
3. MIN. 3" COVER ON ALL REIN.
4. ALL PILINGS TO FDOT CONCR. CLASS V SPEC.
5. CONTRACTOR TO MAINTAIN PILE LOGS.
6. PILES SHALL BE FROM A FDOT CERTIFIED FACILITY OF PRESTRESSED CONCRETE PRODUCTS.
7. PRODUCTION PILE LENGTH TO BE ANALYZED BY EOR AFTER INDICATOR PILE REVIEW.

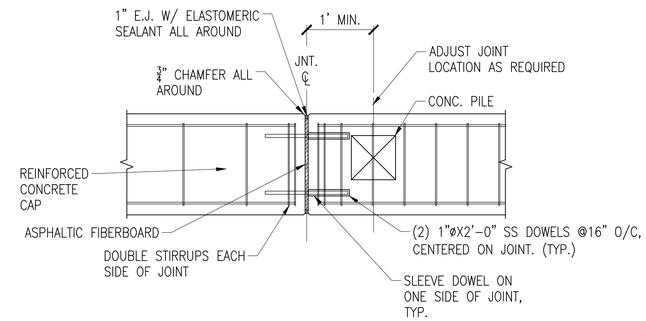

EXPANSION JOINT DETAIL

SCALE: 22x34: 1" = 2'
11x17: 1" = 4'

5 / CM-2.1

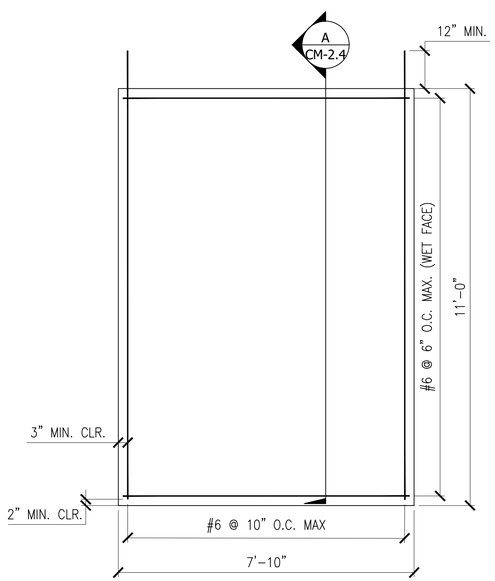

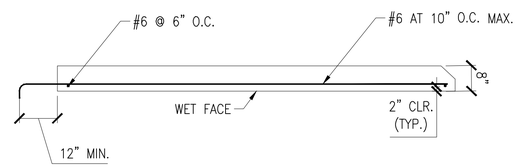

CROSS SECTION

A / CM-2.4

GFRP REINFORCED CONCRETE PANEL DETAIL

SCALE: 22x34: 1" = 2'
11x17: 1" = 4'

6 / CM-2.1

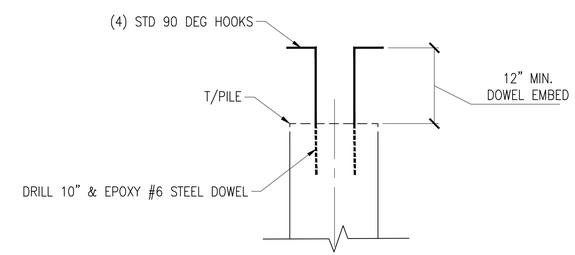

PILE DOWEL EMBED. DETAIL

SCALE: 22x34: 1" = 1'
11x17: 1" = 2'

7 / CM-2.2

U.S. Army Corps of Engineers
SAJ-2022-01689
10/6/2022
Project Manager: C Frey

J:\Projects\71900 1800 W 23rd Street (Luria)\Drawing\Working\(2022-09-09) 71900 _1800_W_23RD.dwg

PROJECT:
1800 W 23RD STREET SEAWALL & DOCK REPLACEMENT PROJECT

CLIENT:
MR. PETER LURIA
800 WEST 23rd STREET
MIAMI BEACH, FL 33140

ENGINEER:
CUMMINS | CEDERBERG
Coastal & Marine Engineering
201 ALHAMBRA CIRCLE, SUITE 601
CORAL GABLES, FL 33134
TEL: +1 305 741-6155 FAX: +1 305-974-1969
WWW.CUMMINSCEDERBERG.COM
COA # 29062

SEAL:
FOR REGULATORY REVIEW. NOT FOR CONSTRUCTION
LEONARD BARRERA ALLEN, P.E. #90872

ISSUE	DATE	SUBMISSION / REVISION

CC PROJECT NO:	71900
DRAWN	JDR
CHECKED	JT/KC
SCALE	AS SHOWN

SHEET TITLE
SECTIONS & DETAILS

SHEET 8 OF 8
CM-2.4

NOTIFICATION OF ADMINISTRATIVE APPEAL OPTIONS AND PROCESS AND REQUEST FOR APPEAL

Applicant:	File Number: **SAJ-2022-01689**	Date:
Attached is:		See Section below
	INITIAL PROFFERED PERMIT (Standard Permit or Letter of permission)	A
	PROFFERED PERMIT (Standard Permit or Letter of permission)	B
	PERMIT DENIAL	C
	APPROVED JURISDICTIONAL DETERMINATION	D
	PRELIMINARY JURISDICTIONAL DETERMINATION	E

SECTION I - The following identifies your rights and options regarding an administrative appeal of the above decision. Additional information may be found at http://www.usace.army.mil/CECW/Pages/reg_materials.aspx or Corps regulations at 33 CFR Part 331.

A: INITIAL PROFFERED PERMIT: You may accept or object to the permit.

- ACCEPT: If you received a Standard Permit, you may sign the permit document and return it to the district engineer for final authorization. If you received a Letter of Permission (LOP), you may accept the LOP and your work is authorized. Your signature on the Standard Permit or acceptance of the LOP means that you accept the permit in its entirety, and waive all rights to appeal the permit, including its terms and conditions, and approved jurisdictional determinations associated with the permit.

- OBJECT: If you object to the permit (Standard or LOP) because of certain terms and conditions therein, you may request that the permit be modified accordingly. You must complete Section II of this form and return the form to the district engineer. Your objections must be received by the district engineer within 60 days of the date of this notice, or you will forfeit your right to appeal the permit in the future. Upon receipt of your letter, the district engineer will evaluate your objections and may: (a) modify the permit to address all of your concerns, (b) modify the permit to address some of your objections, or (c) not modify the permit having determined that the permit should be issued as previously written. After evaluating your objections, the district engineer will send you a proffered permit for your reconsideration, as indicated in Section B below.

B: PROFFERED PERMIT: You may accept or appeal the permit

- ACCEPT: If you received a Standard Permit, you may sign the permit document and return it to the district engineer for final authorization. If you received a Letter of Permission (LOP), you may accept the LOP and your work is authorized. Your signature on the Standard Permit or acceptance of the LOP means that you accept the permit in its entirety, and waive all rights to appeal the permit, including its terms and conditions, and approved jurisdictional determinations associated with the permit.

- APPEAL: If you choose to decline the proffered permit (Standard or LOP) because of certain terms and conditions therein, you may appeal the declined permit under the Corps of Engineers Administrative Appeal Process by completing Section II of this form and sending the form to the division engineer. This form must be received by the division engineer within 60 days of the date of this notice.

C: PERMIT DENIAL: You may appeal the denial of a permit under the Corps of Engineers Administrative Appeal Process by completing Section II of this form and sending the form to the division engineer. This form must be received by the division engineer within 60 days of the date of this notice.

D: APPROVED JURISDICTIONAL DETERMINATION: You may accept or appeal the approved JD or provide new information.

- ACCEPT: You do not need to notify the Corps to accept an approved JD. Failure to notify the Corps within 60 days of the date of this notice, means that you accept the approved JD in its entirety, and waive all rights to appeal the approved JD.

- APPEAL: If you disagree with the approved JD, you may appeal the approved JD under the Corps of Engineers Administrative Appeal Process by completing Section II of this form and sending the form to the division engineer. This form must be received by the division engineer within 60 days of the date of this notice.

E: PRELIMINARY JURISDICTIONAL DETERMINATION: You do not need to respond to the Corps regarding the preliminary JD. The Preliminary JD is not appealable. If you wish, you may request an approved JD (which may be appealed), by contacting the Corps district for further instruction. Also you may provide new information for further consideration by the Corps to reevaluate the JD.

SECTION II - REQUEST FOR APPEAL or OBJECTIONS TO AN INITIAL PROFFERED PERMIT		
REASONS FOR APPEAL OR OBJECTIONS: (Describe your reasons for appealing the decision or your objections to an initial proffered permit in clear concise statements. You may attach additional information to this form to clarify where your reasons or objections are addressed in the administrative record.)		
ADDITIONAL INFORMATION: The appeal is limited to a review of the administrative record, the Corps memorandum for the record of the appeal conference or meeting, and any supplemental information that the review officer has determined is needed to clarify the administrative record. Neither the appellant nor the Corps may add new information or analyses to the record. However, you may provide additional information to clarify the location of information that is already in the administrative record.		
POINT OF CONTACT FOR QUESTIONS OR INFORMATION:		
If you have questions regarding this decision and/or the appeal process you may contact: **Enter PM Contact Information**	If you only have questions regarding the appeal process you may also contact: **Phillip Shannin** **Administrative Appeals Review Officer** **USACE – South Atlantic Division** **60 Forsyth Street SW, Room 10M15** **Atlanta, Georgia 30303-8801** **Phone: (404) 562-51377**	
RIGHT OF ENTRY: Your signature below grants the right of entry to Corps of Engineers personnel, and any government consultants, to conduct investigations of the project site during the course of the appeal process. You will be provided a 15 day notice of any site investigation, and will have the opportunity to participate in all site investigations.		
_____ Signature of appellant or agent.	Date:	Telephone number:

DEPARTMENT OF THE ARMY PERMIT TRANSFER REQUEST

DA PERMIT NUMBER: SAJ-2022-01689(NW/GP-CNF)

When the structures or work authorized by this permit are still in existence at the time the property is transferred, the terms and conditions of this permit will continue to be binding on the new owner(s) of the property. Although the construction period for works authorized by Department of the Army permits is finite, the permit itself, with its limitations, does not expire.

To validate the transfer of this permit and the associated responsibilities associated with compliance with its terms and conditions, have the transferee sign and date below and mail to the U.S. Army Corps of Engineers, Enforcement Section, Post Office Box 4970, Jacksonville, FL 32232-0019 or submit via electronic mail to: SAJ-RD-Enforcement@usace.army.mil (not to exceed 15 MB).

_____
(TRANSFEREE-SIGNATURE)

_____
(DATE)

_____
(NAME-PRINTED)

_____

_____
(MAILING ADDRESS)

_____
(CITY, STATE, ZIP CODE)

_____
(SUBDIVISION)

_____ _____
(LOT) **(BLOCK)**

_____
(STREET ADDRESS)

SELF-CERTIFICATION STATEMENT OF COMPLIANCE

Within sixty (60) days of completion of the authorized work, submit this form via electronic mail to saj-rd-enforcement@usace.army.mil (preferred, not to exceed 15MB) ***or*** *by standard mail to U.S. Army Corps of Engineers, Enforcement Section, P.O. Box 4970, Jacksonville, FL 32232-0019.*

1. **Department of the Army Permit Number**: SAJ- - (-)

2. **Permittee Information**: Name: _____

   Email: _____

   Address: _____

   _____

   Phone: _____

3. **Date Authorized Work Started**: _____ **Completed**: _____

4. **Contact to Schedule Inspection**: Name: _____

   Email: _____

   Phone: _____

5. **Description of Authorized Work (e.g. bank stabilization, fill placed within wetlands, docks, dredging, etc.):** _____

   _____

   _____

6. **Acreage or Square Feet of Impacts to Waters of the United States**: _____

7. **Describe Mitigation completed (if applicable)**: _____

   _____

   _____

8. **Describe any Deviations from Permit (attach drawing(s) depicting the deviations)**:

   _____

   _____

****

I certify that all work and mitigation (if applicable) was done in accordance with the limitations and conditions as described in the permit. Any deviations as described above are depicted on the attached drawing(s).

_____
Signature of Permittee

_____
Printed Name of Permittee

_____
Date

Dated 9/18/2019

STANDARD MANATEE CONDITIONS FOR IN-WATER WORK

2011

The permittee shall comply with the following conditions intended to protect manatees from direct project effects:

a. All personnel associated with the project shall be instructed about the presence of manatees and manatee speed zones, and the need to avoid collisions with and injury to manatees. The permittee shall advise all construction personnel that there are civil and criminal penalties for harming, harassing, or killing manatees which are protected under the Marine Mammal Protection Act, the Endangered Species Act, and the Florida Manatee Sanctuary Act.

b. All vessels associated with the construction project shall operate at "Idle Speed/No Wake" at all times while in the immediate area and while in water where the draft of the vessel provides less than a four-foot clearance from the bottom. All vessels will follow routes of deep water whenever possible.

c. Siltation or turbidity barriers shall be made of material in which manatees cannot become entangled, shall be properly secured, and shall be regularly monitored to avoid manatee entanglement or entrapment. Barriers must not impede manatee movement.

d. All on-site project personnel are responsible for observing water-related activities for the presence of manatee(s). All in-water operations, including vessels, must be shutdown if a manatee(s) comes within 50 feet of the operation. Activities will not resume until the manatee(s) has moved beyond the 50-foot radius of the project operation, or until 30 minutes elapses if the manatee(s) has not reappeared within 50 feet of the operation. Animals must not be herded away or harassed into leaving.

e. Any collision with or injury to a manatee shall be reported immediately to the Florida Fish and Wildlife Conservation Commission (FWC) Hotline at 1-888-404-3922. Collision and/or injury should also be reported to the U.S. Fish and Wildlife Service in Jacksonville (1-904-731-3336) for north Florida or Vero Beach (1-772-562-3909) for south Florida, and to FWC at ImperiledSpecies@myFWC.com

f. Temporary signs concerning manatees shall be posted prior to and during all in-water project activities. All signs are to be removed by the permittee upon completion of the project. Temporary signs that have already been approved for this use by the FWC must be used. One sign which reads *Caution: Boaters* must be posted. A second sign measuring at least 8 ½" by 11" explaining the requirements for "Idle Speed/No Wake" and the shut down of in-water operations must be posted in a location prominently visible to all personnel engaged in water-related activities. These signs can be viewed at MyFWC.com/manatee. Questions concerning these signs can be sent to the email address listed above.

CAUTION: MANATEE HABITAT

All project vessels

IDLE SPEED / NO WAKE

When a manatee is within 50 feet of work
all in-water activities must

SHUT DOWN

Report any collision with or injury to a manatee:

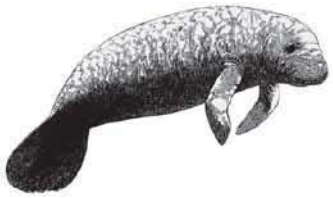

Wildlife Alert:

1-888-404-FWCC(3922)

cell *FWC or #FWC