CONTENTS

1 Introduction 4
- 1.1 Background 4
- 1.2 Objective 4
- 1.3 Design Codes and Design Standards 4
- 1.4 Design Components 4
- 1.5 Load Combinations 4
- 1.6 Materials 5
- 1.7 Soil Parameters 5
- 1.8 Design Conditions 5

2 Seawall Engineering Analysis 6
- 2.1 Methodology 6
- 2.2 GEO5 Analysis Results 6
- 2.3 GFRP Reinforced Concrete Panel – Moment & Shear 13
- 2.4 GFRP Reinforced Concrete Panel – Reinforcement 14
  - 2.4.1 Dimensions & Properties 14
  - 2.4.2 Flexure Strength of Wall (Primary Reinforcement) 15
  - 2.4.3 Effective Strength at the Strength & Extreme Event Limit State 15
  - 2.4.4 Shear Check 17
  - 2.4.5 Shear Capacity 17
  - 2.4.6 Creep Rupture 19
  - 2.4.7 Minimum Flexural Reinforcement 20
  - 2.4.8 Longitudinal Reinforcement 21
  - 2.4.9 Longitudinal Spacing Requirements 21
  - 2.4.10 Secondary Reinforcement – Temperature & Shrinkage 23
- 2.5 GFRP Reinforced Concrete Cap – Moment & Shear (Vertical Loading) 24
  - Results 24
- 2.6 GFRP Reinforced Concrete Cap - Reinforcement 27
  - 2.6.1 Dimensions & Properties 27
  - 2.6.2 Vertical Loading 28
  - 2.6.3 Flexural Strength 29
  - 2.6.4 Effective Strength at the Strength & Extreme Event Limit State 29
  - 2.6.5 Minimum Flexural Reinforcement 31
  - 2.6.6 Creep Rupture 32
  - 2.6.7 Longitudinal Spacing Requirements 33
  - 2.6.8 Shear 35
  - 2.6.9 Shear Resistance of Concrete 35
  - 2.6.10 Shear Resistance of Transverse Reinforcement 36
  - 2.6.11 Shear Check 38
  - 2.6.12 Maximum Spacing of Transverse Reinforcement 38
- 2.7 Precast Steel-Reinforced Concrete Batter Pile (Compression) 39
  - 2.7.1 AllPile Results 39

2.8 Precast Steel-Reinforced Concrete King Pile (Tension) 43
2.8.1 Pressure Redistribution 43
2.8.2 Dead Loads 43
2.8.3 Tension on King Pile 44
2.8.4 AllPile Results 44
2.9 Development of Hooked Bars in Tension 48
2.9.1 From Prestressed King and Batter Piles 48

3 Dock Engineering Analysis 50
3.1 Methodology 50
3.2 GFRP Reinforced Concrete Slab – Moment & Shear 50
3.3 GFRP Reinforced Concrete Slab – Reinforcement 51
3.3.1 Dimensions & Properties 51
3.3.2 Flexural Strength of Slab (Primary Reinforcement) 52
3.3.3 Effective Strength at the Strength & Extreme Event Limit State 52
3.3.4 Shear Check 54
3.3.5 Shear Capacity 54
3.3.6 Creep Rupture 56
3.3.7 Minimum Flexural Reinforcement 57
3.3.8 Longitudinal Reinforcement 58
3.3.9 Longitudinal Spacing Requirements 58
3.3.10 Deflection Check 60
3.3.11 Secondary Reinforcement (Temperature & Shrinkage) 62
3.4 GFRP Reinforced Concrete Beam – Moment & Shear 64
Results 65
3.5 GFRP Reinforced Concrete Beam – Reinforcement 66
3.5.1 Dimensions & Properties 66
3.5.2 Vertical Loading 67
3.5.3 Flexural Strength (Vertical Loading) 68
3.5.4 Effective Strength at the Strength & Extreme Event Limit State 68
3.5.5 Minimum Flexural Reinforcement 70
3.5.6 Creep Rupture 71
3.5.7 Longitudinal Spacing Requirements 72
3.5.8 Shear 74
3.5.9 Shear Resistance of Concrete 74
3.5.10 Shear Resistance of Transverse Reinforcement 75
3.5.11 Shear Check 76
3.5.12 Maximum Spacing of Transverse Reinforcement 77
3.6 Vessel Mooring Loads 78
3.7 Precast Steel-Reinforced Concrete Dock Pile 80
3.7.1 AllPile Results 80

4 Timber Fender Pile Analysis 85
4.1 Vessel Loading 85
4.2 Timber Pile 85
4.2.1 AllPile Results 85

5 14" sq. P.S. Pile Capacities 90

Leonard Barrera Allen, P.E.

FL. P.E. No. 90872

This item has been digitally signed and sealed by Leonard Barrera Allen on the date adjacent to the seal.
Printed copies of this document are not considered signed and sealed and the signature must be verified on any electronic copies.

1 INTRODUCTION

1.1 Background

Cummins Cederberg, Inc. (Cummins Cederberg) was retained by Peter Luria (Client) to design the replacement of the existing seawall and dock at 1800 W 23rd Street, Miami Beach, Florida.

1.2 Objective

This report describes the results of the engineering calculations performed for the proposed concrete seawall and dock elements at 1800 W 23rd Street, Miami Beach, Florida (Project Site). The calculation involves the design of Glass Fiber Reinforced Polymer (GFRP) reinforced concrete members on the seawall and dock, and prestressed steel reinforced concrete square piles.

1.3 Design Codes and Design Standards

The relevant design codes and design standards utilized for the engineering calculations are listed below:

- AASHTO LFRD Bridge Design Specifications (2012)
- AASHTO LFRD Bridge Design Guide for GFRP-Reinforced Concrete (2018)
- ACI 318-19
- Florida Building Code (2020)
- FDOT Standard Specification for Road & Bridge Construction (2016)
- City of Miami Beach Code of Ordinances
- Marinas and Small Craft Harbors, *Tobiasson & Kollmeyer* (2000)

1.4 Design Components

The following design components are included in these engineering calculations:

- GFRP-Reinforced Concrete Panel
- GFRP-Reinforced Concrete Cap
- GFRP-Reinforced Concrete Slab
- GFRP-Reinforced Concrete Beam
- Precast steel-reinforced concrete king piles
- Precast steel-reinforced concrete batter piles

1.5 Load Combinations

The following load combinations for Load Factor and Resistance Design were utilized as based on the AASHTO LFRD Bridge Design Specifications (2012) and as applicable for the design components being considered:

- Strength I: 1.25(DC) + 1.75(LL) + 1.5(EH)
- Service I: DC + LL + EH

Where:

- DC = Dead Load of structural components and non-structural attachments
- LL = Live Load
- EH = Horizontal earth pressure

1.6 Materials

The engineering analysis was conducted with GFRP material per FDOT Spec. 932-3.

Table 3-1
Size and Strength of FRP reinforcing bars

Bar Size Designation	Nominal Bar Diameter (in)	Nominal Cross Sectional Area (in^2)	Maximum Cross Sectional Area (in^2)	f^*_{fu}, Guaranteed Ultimate Tensile Strength (ksi)	
				GFRP Bars	CFRP Bars
2	1/4	0.049	0.058	125	210
3	3/8	0.110	0.132	120	190
4	1/2	0.196	0.234	110	170
5	5/8	0.307	0.367	95	160
6	3/4	0.442	0.529	92.5	160
7	7/8	0.601	0.721	90	-
8	1	0.785	0.942	85	-
9	1-1/8	0.994	1.192	82.5	-
10	1-1/4	1.227	1.472	80	-

1.7 Soil Parameters

A uniform soft to medium sandy soil was assumed.
Soil parameters:

- Unit Weight: 115 pcf
- Angle of Internal Friction: 30 degrees
- Angle of friction, structural-soil: 20 degrees
- Saturated Unit Weight: 125 pcf
- Average Nspt: 15

1.8 Design Conditions

The following design conditions were utilized for the engineering analysis:

- Proposed seawall elevation at +4.5' NAVD
  - Approx. retained height of 10.5 ft
- Seawall designed for future elevation of +5.7' NAVD
  - Approx. retained height of 11.7 ft
- Water table elevation behind construction at +0.25' NAVD
- Water table elevation in front of construction at -2.21' NAVD

- Concrete King and Batter piles spaced at max 8-ft on center
- Bulkhead surcharge: 100 psf
- Max. vessel length overall (LOA) at 40 ft
- Dock occupied design wind speed: 40 MPH sustained

2 SEAWALL ENGINEERING ANALYSIS

2.1 Methodology

GEO5, a geostructural analysis software package, was used to analyze the proposed concrete seawall with the aforementioned design conditions. Specifically, the Sheeting Design module of GEO5 was utilized. The Sheeting Design module is based on the analysis of lateral earth pressures based on the design conditions. Sheeting Design will output the required embedment lengths and the internal forces on the structure due to the earth pressures.

Select outputs provided by GEO5 were used as inputs in Tekla Tedds, a structural analysis software, to obtain bending moment and shear required to verify the design and strength of the reinforced concrete cap and dock beam. The design was based on the future condition of the seawall, with the top elevation at +5.7 ft NAVD.

AllPile, a pile analysis software, was utilized to verify the strength of the batter piles in compression, and the king piles in uplift. The horizontal support reaction force given by GEO5 will be taken as the horizontal force experienced by the batter pile, which is converted into an axial force as follows:

$F_H = 21.9$ kip; $F_V = 3*F_H = 65.9$ kip; $Q = \sqrt{(F_H^2+F_V^2)} = 69.5$ kip

Thus, the axial force (Q) was input as 69.5 kips in AllPile.

2.2 GEO5 Analysis Results

Sheeting structure design

Input data

Project

Task	:	1 - Marine Engineering Design
Part	:	Seawall Structural Design
Description	:	Reinforced Concrete Seawall with King and Batter Piles
Customer	:	Peter Luria
Author	:	Kenkway Chang
Date	:	4/4/2022
Project ID	:	1800 W 23rd Street

Project number : 71900

Settings

USA - Safety factor

Materials and standards

Concrete structures :	ACI 318-11
Steel structures :	EN 1993-1-1 (EC3)
Partial factor on bearing capacity of steel cross section :	γ_{M0} = 1.00
Timber structures :	EN 1995-1-1 (EC5)
Partial factor for timber property :	γ_M = 1.30
Modif. factor of load duration and moisture content :	k_{mod} = 0.50
Coeff. of effective width for shear stress :	k_{cr} = 0.67

Pressure analysis

Active earth pressure calculation :	Coulomb
Passive earth pressure calculation :	Mazindrani (Rankine)
Earthquake analysis :	Mononobe-Okabe
Verification methodology :	Safety factors (ASD)

Basic soil parameters

No.	Name	Pattern	φ_{ef} [°]	c_{ef} [psf]	γ [pcf]	γ_{su} [pcf]	δ [°]
1	Sand		30.00	0.0	115.00	62.50	20.00

Soil parameters

Sand

Unit weight :	γ	=	115.0 pcf
Stress-state :	effective		
Angle of internal friction :	φ_{ef}	=	30.00 °
Cohesion of soil :	c_{ef}	=	0.0 psf
Angle of friction struc.-soil :	δ	=	20.00 °
Soil :	cohesionless		
Saturated unit weight :	γ_{sat}	=	125.0 pcf

Geological profile and assigned soils

No.	Thickness of layer t [ft]	Depth z [ft]	Assigned soil	Pattern
1	-	0.00 .. ∞	Sand	

Geometry of structure

Soil in front of wall is excavated to a depth of 11.70 ft.

Cross-section

Cross-section name : Pile curtain a = 8.00 ft; b = 1.17 ft; h = 1.17 ft
Material of pile : concrete
Computed coefficient of pressure reduction below the ditch = 0.42

Area of cross-section A = 1.71E-01 ft^2/ft
Moment of inertia I = 1.95E-02 ft^4/ft
Elastic modulus E = 3122.0 ksi
Shear modulus G = 1311.2 ksi

Name : Geometry | **Stage - analysis : 1 - 0**

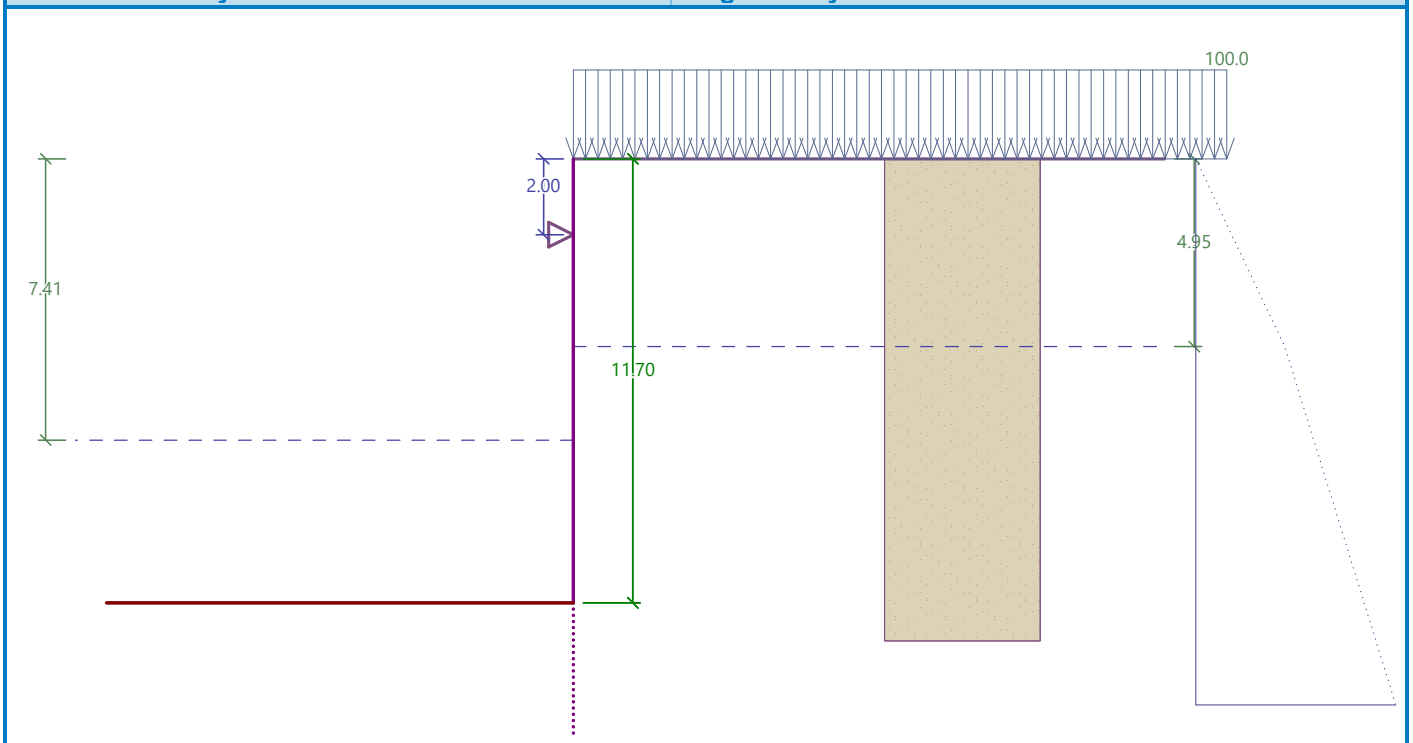

Inserted supports

No.	New support	Depth z [ft]	Spacing b [ft]
1	Yes	2.00	8.00

Pressure acting on structure

Type of pressure : active
Minimum pressure is considered as $\sigma_{a,min} = 0.20\sigma_z$
Type of redistribution : triangle

Depth [ft]	Basic pressure [psf]	Redistributed pressure [psf]	Other pressure [psf]	Overall pressure [psf]
0.00	0.00	0.00	27.94	27.94
2.00	64.26	393.42	27.94	421.36
4.95	159.04	299.75	27.94	327.69
7.41	210.71	221.63	181.69	403.32
14.39	357.30	0.00	27.94	27.94

Terrain profile

Terrain behind the structure is flat.

Water influence

GWT behind the structure lies at a depth of 4.95 ft
GWT in front of the structure lies at a depth of 7.41 ft
Subgrade at the heel is permeable.
Hydraulic gradient = 0.36

Input surface surcharges

No.	Surcharge new	Surcharge change	Action	Mag.1 [lbf/ft²]	Mag.2 [lbf/ft²]	Ord.x x [ft]	Length l [ft]	Depth z [ft]
1	Yes		permanent	100.0				on terrain

No.	Name
1	Bulkhead Surcharge

Settings of the stage of construction

Design situation : permanent

Verification No. 1

Design of anchored sheeting wall fixed at heel

Coeff. of reduction of passive pressure = 0.67
Computed depth of the zero-value point u = 4.23 ft

Max. value of shear force = 2423.23 lbf/ft
Max. value of moment = 6628.2 lbfft/ft
Required depth of structure in soil = 17.54 ft
Overall length of structure = 29.24 ft

Reactions in supports

No.	Depth z [ft]	Reaction [lbf]
1	2.00	21974.77

Distribution of pressure and internal forces along the structure

Depth [ft]	Total Pressure [psf]	Shear Force [lbf/ft]	Moment [lbfft/ft]
0.00	27.94	-0.00	-0.00
2.00	421.36	-449.30	318.16
2.00	421.36	2297.54	318.16
3.48	374.52	1710.58	-2629.34
4.95	327.69	1192.70	-4762.01
7.41	403.32	293.56	-6628.25
9.15	309.47	-328.31	-6574.12
10.90	215.63	-786.42	-5577.79
12.64	121.78	-1080.79	-3924.96
14.39	27.94	-1211.42	-1901.35
14.39	27.94	-1211.42	-1901.35
14.40	62.59	-1211.87	-1889.24
14.40	62.59	-1211.87	-1889.24
16.16	-17.42	-1251.73	305.63
17.93	-97.43	-1150.38	2446.23
19.69	-177.44	-907.82	4283.33
21.46	-257.45	-524.04	5567.69
23.22	-337.46	0.96	6050.07
24.99	-417.47	667.17	5481.23
26.75	-497.48	1474.59	3611.93
28.52	-577.49	2423.23	192.93

Name : Chart Analysis | **Stage - analysis : 1 - 1**

Geometry of structure
Length of structure = 29.24 ft
Depth in soil = 17.54 ft

Bending moment
Max. M = 6628.2 lbfft/ft

Shear force
Max. Q = 2423.23 lbf/ft

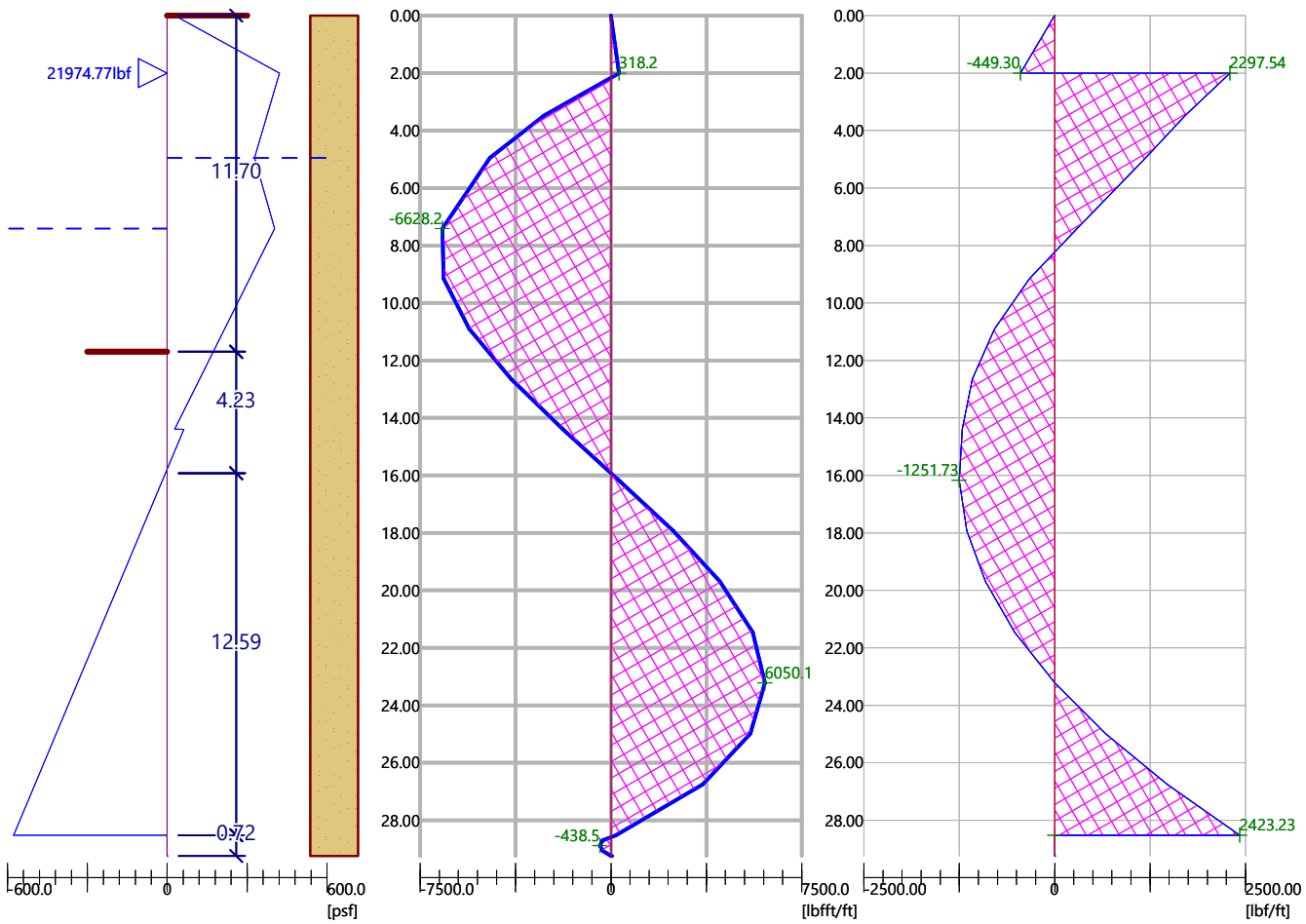

Dimensioning No. 1

	Shear force min. [lbf/ft]	Shear force max [lbf/ft]	Moment min. [lbfft/ft]	Moment max. [lbfft/ft]
0.00	-0.00	-0.00	-0.00	-0.00
2.00	-449.30	-449.30	318.16	318.16
2.00	2297.54	2297.54	318.16	318.16
3.48	1710.58	1710.58	-2629.34	-2629.34
4.95	1192.70	1192.70	-4762.01	-4762.01
7.41	293.56	293.56	-6628.25	-6628.25
9.15	-328.31	-328.31	-6574.12	-6574.12
10.90	-786.42	-786.42	-5577.79	-5577.79

	Shear force min. [lbf/ft]	Shear force max [lbf/ft]	Moment min. [lbfft/ft]	Moment max. [lbfft/ft]
12.64	-1080.79	-1080.79	-3924.96	-3924.96
14.39	-1211.42	-1211.42	-1901.35	-1901.35
14.39	-1211.42	-1211.42	-1901.35	-1901.35
14.40	-1211.87	-1211.87	-1889.24	-1889.24
14.40	-1211.87	-1211.87	-1889.24	-1889.24
16.16	-1251.73	-1251.73	305.63	305.63
17.93	-1150.38	-1150.38	2446.23	2446.23
19.69	-907.82	-907.82	4283.33	4283.33
21.46	-524.04	-524.04	5567.69	5567.69
23.22	0.96	0.96	6050.07	6050.07
24.99	667.17	667.17	5481.23	5481.23
26.75	1474.59	1474.59	3611.93	3611.93
28.52	2423.23	2423.23	192.93	192.93
28.70	2423.23	2423.23	-328.85	-328.85
28.88	2423.23	2423.23	-438.46	-438.46
29.06	2423.23	2423.23	-328.85	-328.85
29.24	2423.23	2423.23	0.00	0.00

Maximum internal forces

Maximum bending moment = 6050.1 lbfft/ft
Minimum bending moment = -6628.2 lbfft/ft
Maximum shear force = 2423.23 lbf/ft

2.3 GFRP Reinforced Concrete Panel – Moment & Shear

GEO5 Results

Max Moment: $M_{max} := 6.6 \frac{(ft \cdot kip)}{ft}$

Max Shear: $V_{max} := 2.4 \frac{kip}{ft}$

Net Pressure: $p_{panel} := 422 \cdot psf$

Anchor Force: $F_a := 2.75 \frac{kip}{ft}$

Loading

Assumptions: Panels are loaded under active earth pressure, earth pressure resulting from an uniform surcharge and hydrostatic loading.
Load combinations factors based on *AASHTO LFRD Bridge Design Spec. 2012*

Horizontal Earth Pressure Factor (Table 3.4.1-2): $EH_{panel} := 1.5$

Panel Span: $L_{panel} := 8.0 \cdot ft$

Bending Moment

Using per foot analysis of reinforced concrete panel: $b_{panel} := 12in$

$$W_{panel.factored} := EH_{panel} \cdot p_{panel} \cdot b_{panel} = 0.633 \cdot \frac{kip}{ft}$$

Service Moment: $M_{s.panel} := \frac{p_{panel} \cdot b_{panel} \cdot L_{panel}^2}{8} = 3.376 \cdot kip \cdot ft$

Factored Moment: $M_{f.panel} := \frac{W_{panel.factored} \cdot L_{panel}^2}{8} = 5.064 \cdot kip \cdot ft$

Ultimate Moment: $M_{u.panel} := M_{f.panel} = 5.064 \cdot kip \cdot ft$

Shear

Service Shear: $V_{s.panel} := \frac{p_{panel} \cdot b_{panel} \cdot L_{panel}}{2} = 1.688 \cdot kip$

Factored Shear: $V_{f.panel} := \frac{W_{panel.factored} \cdot L_{panel}}{2} = 2.532 \cdot kip$

Ultimate Shear: $V_{u.panel} := V_{f.panel} = 2.532 \cdot kip$

2.4 GFRP Reinforced Concrete Panel – Reinforcement

GFRP reinforced concrete panel supported by king piles space 8'-0" O.C., panel minimum height of 11.25', panel thickness of 0'-8" and 2'-0" penetration into ground. Wall top elevation at +4.5' NAVD.

Reference: *AASHTO LFRD Bridge Design Guide Specifications for GFRP-Reinforced Concrete*

2.4.1 Dimensions & Properties

Panel Span: $L_{panel} := 8.0 \cdot ft$

Panel Thickness: $t_{panel} := 8in$

Concrete Compressive Strength: $f_c := 5 \cdot ksi$

Concrete unit weight: $w_c := 145 \cdot pcf$

Clear Cover: $cc := 2in$

Flexure Bar Number: $N_b := 6$

Flexure Bar Spacing: $S_b := 6 \cdot in$

Flexure Bar Diameter: $D_b := \frac{N_b \cdot in}{8} = 0.75 \cdot in$

Flexure Bar Area: $A_b := \pi \frac{D_b^2}{4} = 0.442 \cdot in^2$

Temp Bar Number: $N_v := 6$

Temp Bar Diameter: $D_v := \frac{N_v \cdot in}{8} = 0.75 \cdot in$

Temp Bar Area: $A_v := \pi \frac{D_v^2}{4} = 0.442 \cdot in^2$

Estimated Max aggregate size: $a_{agg} := 0.75$ (inches)

Distance to Steel Centroid: $d_{panel} := t_{panel} - cc - D_v - \frac{D_b}{2} = 4.875 \cdot in$

2.4.2 Flexure Strength of Wall (Primary Reinforcement)

Using per foot analysis of reinforced concrete panel: $b_{panel} := 12in$

Flexure Bar Area per segment: $A_f := A_b \cdot \frac{1 \cdot ft}{(S_b)} = 0.884 \cdot in^2$

GFRP Tensile Modulus of Elasticity: $E_f := 8700ksi$

GFRP Min. Tensile Load Flexure: $P_{t.1} := 40.9 \cdot kip$

GFRP Yield Strength: $f_{yu.panel} := \frac{P_{t.1}}{A_b} = 92.579 \cdot ksi$

Enviro. Reduction Factor: $C_E := 0.7$

GFRP Design Yield Strength: $f_{yd.panel} := C_E \cdot f_{yu.panel} = 64.805 \cdot ksi$ *(AASHTO GFRP 2.4.2.1)*

Strain in Concrete: $\varepsilon_c := 0.003$

Equivalent Rectangular Concrete Stress Distribution Factor:

$$\beta_1 := \begin{cases} 0.85 & \text{if } 2500psi \le f_c \le 4000psi \\ 0.85 - 0.05 \cdot \frac{(f_c - 4000psi)}{1000psi} & \text{if } 4000psi < f_c < 8000psi \\ 0.65 & \text{if } f_c \ge 8000psi \end{cases} = 0.8$$

2.4.3 Effective Strength at the Strength & Extreme Event Limit State

GFRP Reinforment Ratio: $\rho_f := \frac{A_f}{b_{panel} \cdot d_{panel}} = 0.015$ *(AASHTO GFRP 2.6.3)*

Max Tensile Stress in GFRP-Effective Strength: $f_f := \sqrt{\frac{(E_f \cdot \varepsilon_c)^2}{4} + \left(\frac{0.85 \cdot \beta_1 \cdot f_c}{\rho_f}\right) \cdot E_f \cdot \varepsilon_c} - 0.5 \cdot E_f \cdot \varepsilon_c = 64.704 \cdot ksi$

$$\text{Type} := \begin{cases} \text{"Concrete Crushing"} & \text{if } f_f \le f_{yd.panel} \\ \text{"GFRP Rupture"} & \text{if } f_f > f_{yd.panel} \end{cases} = \text{"Concrete Crushing"}$$

GFRP Tensile Strain:

$$\varepsilon_f := \frac{f_f}{E_f} = 7.437 \times 10^{-3}$$ *Tensile Strain*

$$\varepsilon_{yd} := \frac{f_{yd.panel}}{E_f} = 7.449 \times 10^{-3}$$ *Guaranteed DesignTensile Strain*

Depth of equivalent rectangular stress block:

$$a_{panel} := \begin{cases} \beta_1 \cdot \dfrac{\varepsilon_c}{\varepsilon_c + \varepsilon_{yd}} \cdot d_{panel} & \text{if } f_f > f_{yd.panel} \\ \dfrac{A_f \cdot f_f}{0.85 \cdot f_c \cdot b_{panel}} & \text{otherwise} \end{cases} = 1.121 \cdot in$$

Axis Depth at balance:

$$c_{b.panel} := \frac{a_{panel}}{\beta_1} = 1.401 \cdot in$$

Nominal Moment Capacity:

$$M_{n.panel} := \begin{cases} A_f \cdot f_{yd.panel} \cdot \left(d_{panel} - \dfrac{a_{panel}}{2} \right) & \text{if } f_f > f_{yd.panel} \\ A_f \cdot f_f \cdot \left(d_{panel} - \dfrac{a_{panel}}{2} \right) & \text{otherwise} \end{cases} = 20.555 \cdot kip \cdot ft$$

Resistance Factor: *(AASHTO GFRP 2.5.5.2)*

$$\phi_{panel} := \begin{cases} 0.75 & \text{if } \varepsilon_f \le 0.80 \cdot \varepsilon_{yd} \\ \left(1.55 - \dfrac{\varepsilon_f}{\varepsilon_{yd}} \right) & \text{if } 0.80 \cdot \varepsilon_{yd} < \varepsilon_f < \varepsilon_{yd} \\ 0.55 & \text{otherwise} \end{cases} = 0.552$$

Design Flexure Resistance:

$$M_{r.panel} := \phi_{panel} \cdot M_{n.panel} = 11.337 \cdot kip \cdot ft$$

Check Moment Capacity:

Moment Ratio: $$M_{ratio} := \frac{M_{u.panel}}{M_{r.panel}} = 0.447$$

$$CheckM_{wall} := if\left(max\left(M_{ratio}\right) \le 1, "OK", "NO\ GOOD"\right)$$

$$CheckM_{wall} = "OK"$$

2.4.4 Shear Check

(AASHTO GFRP 2.7.2.8)

Effective Shear Depth: $$d_v := d_{panel} - \frac{a_{panel}}{2} = 4.315 \cdot in$$

$$d_v := max\left(d_v, 0.9 \cdot d_{panel}, 0.72 \cdot t_{panel}\right) = 5.76 \cdot in$$

2.4.5 Shear Capacity

(AASHTO GFRP 2.7.3.6)

Longitudinal Strain: $$\varepsilon_f := \frac{\left(max\left(\frac{M_{u.panel}}{d_v}, V_{u.panel}\right)\right) + V_{u.panel}}{E_f \cdot A_f} = 1.702 \times 10^{-3}$$

$$\varepsilon_f := min\left(\varepsilon_f, 0.006\right) = 1.702 \times 10^{-3}$$

Angle of inclination of diagonal compressive stresses: $$\theta_p := 29 + 3500 \cdot \varepsilon_f = 34.956$$

$$\theta_p := 34.956 \cdot deg$$

Crack Spacing Parameter: $s_x := d_v = 5.76 \cdot in$

$$s_{xe} := s_x \cdot \frac{1.38}{a_{agg} + 0.63} = 5.76 \cdot in$$

$$s_{xe} := \max(12 \cdot in, \min(s_{xe}, 80 \cdot in)) = 12 \cdot in$$

Factor of diagonally cracked concrete to transmit to tension and shear:

$$\beta := \left(\frac{4.8}{1 + 750 \cdot \varepsilon_f}\right) \cdot \left(\frac{51}{39 + \frac{s_{xe}}{in}}\right) = 2.109$$

(AASHTO GFRP 2.7.3.4)

Shear Resistance of Concrete: $V_c := 0.0316 \cdot \beta \cdot \sqrt{f_c \cdot ksi} \cdot b_{panel} \cdot d_v = 10.299 \cdot kip$

Ultimate Shear: $V_{u.panel} = 2.532 \cdot kip$

Resistance Factor Shear: $\phi_v := 0.75$

Factored Shear Resistance: $V_{r.panel} := \phi_v \cdot V_c = 7.724 \cdot kip$

Conc. Shear Ratio: $V_{conc.ratio} := \frac{V_{u.panel}}{V_{r.panel}} = 0.328$

$$ReinfReq := \begin{cases} \text{"Verified, No Reinforcement Req."} & \text{if } V_{u.panel} \le V_{r.panel} \\ \text{"Yes"} & \text{otherwise} \end{cases}$$

ReinfReq = "Verified, No Reinforcement Req."

2.4.6 Creep Rupture

(AASHTO GFRP 2.5.3)

Moments due to dead load and sustained portion of live load included in Service I load combination in Table 3.4.1-1.

Creep Rupture Reduction Factor: $C_c := 0.3$

Creep Rupture Limit Stress: $f_{f.creep} := C_c \cdot f_{yd.panel} = 19.442 \cdot ksi$

Service Sustained Moment: $M_{creep.panel} := M_{s.panel} = 3.376 \cdot kip \cdot ft$

Correction Factor: $K_1 := 1.0$

(AASHTO LFRD 5.4.2.4)

Concrete Modulus of Elasticity: $E_{c.elas} := 120000 \cdot K_1 \cdot \left(\frac{w_c}{pcf \cdot 1000}\right)^2 \left(\frac{f_c}{ksi}\right)^{0.33} \cdot ksi = 4.291 \times 10^3 \cdot ksi$

Modular Ratio: $n_f := \frac{E_f}{E_{c.elas}} = 2.027$

Ratio of Depth of Neutral Axis to Reinf. Depth: $k := \sqrt{2 \cdot \rho_f \cdot n_f + (\rho_f \cdot n_f)^2} - \rho_f \cdot n_f = 0.219$

Cracked Moment of Inertia: $I_{cr.panel} := \frac{b_{panel} \cdot d_{panel}^3}{3} \cdot k^3 + A_f \cdot n_f \cdot (d_{panel} - k \cdot d_{panel})^2 = 30.835 \cdot in^4$

Max sustained tensile stress: $f_{fs.creep} := \frac{n_f \cdot d_{panel} \cdot (1 - k)}{I_{cr.panel}} \cdot M_{creep.panel} = 10.145 \cdot ksi$

Rupture Ratio: $Creep_{ratio} := \frac{f_{fs.creep}}{f_{f.creep}} = 0.522$

$$Check_{creep.rup} := \begin{cases} \text{"OK"} & \text{if } f_{fs.creep} \le f_{f.creep} \\ \text{"NO GOOD"} & \text{otherwise} \end{cases} = \text{"OK"}$$

$Check_{creep.rup} = \text{"OK"}$

2.4.7 Minimum Flexural Reinforcement

The minimum flexural reinforcement requirement prevents a sudden failure upon ultimate loading.

Concrete Modulus of Rupture: *(AASHTO LFRD 2012 5.4.2.6)*

$f_r := 0.2 \cdot \sqrt{f_c \cdot ksi} = 0.447 \cdot ksi$

Section Modulus: $S_r := \frac{t_{panel}^2 \cdot b_{panel}}{6} = 128 \cdot in^3$

Cracking Moment: $M_{cr.panel} := 1.6 \cdot f_r \cdot S_r = 7.632 \cdot kip \cdot ft$ *(AASHTO GFRP 2.6.3.3)*

Min. Required Factored Flexure Resistance: $M_{min.panel} := \min(1.33 \cdot M_{u.panel}, M_{cr.panel}) = 6.735 \cdot kip \cdot ft$

Flexure Capacity of Panel: $M_{r.panel} = 11.337 \cdot kip \cdot ft$

Moment Ratio: $M_{min.ratio} := \frac{M_{min.panel}}{M_{r.panel}} = 0.594$

$$Check_{MinReinf.panel} := \begin{cases} \text{"OK"} & \text{if } M_{min.panel} \le M_{r.panel} \\ \text{"NO GOOD"} & \text{otherwise} \end{cases} = \text{"OK"}$$

$Check_{MinReinf.panel} = \text{"OK"}$

2.4.8 Longitudinal Reinforcement

Tension due to Shear in longitudinal reinforcement (AASHTO GFRP 2.7.3.7)

Required GFRP bar stress: $f_{fr} := \min(f_f, f_{yd.panel}) = 64.704 \cdot ksi$

Provided Primary Reinf: $Long_{prov} := A_f \cdot f_{fr} = 57.17 \cdot kip$

Required Primary Reinf: $Long_{req} := \frac{M_{u.panel}}{d_v \cdot \phi_{panel}} + \frac{V_{u.panel}}{\phi_v} \cdot \cot(\theta_p) = 23.957 \cdot kip$

Primary Reinf. Ratio: $Long_{ratio} := \frac{Long_{req}}{Long_{prov}} = 0.419$

$$Check_{LongReinf} := \begin{cases} \text{"OK"} & \text{if } Long_{req} \le Long_{prov} \\ \text{"NO GOOD"} & \text{otherwise} \end{cases} = \text{"OK"}$$

$Check_{LongReinf} = \text{"OK"}$

2.4.9 Longitudinal Spacing Requirements

To control width of cracking. (AASHTO GFRP 2.6.7)

Bond Reduction Factor: $C_b := 0.83$

Max. Crack Width Limit: $w_{crack} := 0.028 \cdot in$

$$MaxBarSpace_{panel} := \min\left(1.15 \cdot \frac{C_b \cdot E_f \cdot w_{crack}}{f_{fs.creep}} - 2.5 \cdot cc, 0.92 \cdot \frac{C_b \cdot E_f \cdot w_{crack}}{f_{fs.creep}}\right) = 17.92 \cdot in$$

Recall Bar Spacing: $S_b = 6 \cdot in$

$$Check_{BarSpace.panel} := \begin{cases} \text{"OK"} & \text{if } S_b \le MaxBarSpace_{panel} \\ \text{"NO GOOD"} & \text{otherwise} \end{cases} = \text{"OK"}$$

$$\boxed{Check_{BarSpace.panel} = \text{"OK"}}$$

Tensile check in GFRP at service limit state and crack width.

Thickness of cc from extreme tension fiber to center of flexural GFRP:

$$d_c := t_{panel} - d_{panel} = 3.125 \cdot in$$

Distance ratio of [neutral axis to extreme tension fiber] to [neutral axis to center of tensile reinf] :

$$\xi := \frac{(t_{panel} - k \cdot d_{panel})}{(d_{panel} - k \cdot d_{panel})} = 1.821$$

$$GFRPMaxd_c := \frac{(C_b \cdot E_f \cdot w_{crack})}{(2 \cdot f_{fs.creep} \cdot \xi)} = 5.474 \cdot in$$

$$CheckGFRPd_c := \begin{cases} \text{"OK"} & \text{if } d_c \le GFRPMaxd_c \\ \text{"NO GOOD"} & \text{otherwise} \end{cases} = \text{"OK"}$$

$$\boxed{CheckGFRPd_c = \text{"OK"}}$$

<u>Reinforcement Check per AASHTO GFRP 2.9.3.</u>

<u>Precast Concrete Panel</u>

Min. Reinforcement Spacing:

$$MinSpacing_b := \max(D_b, 1.33 \cdot a_{agg} \cdot in, 1.0 \cdot in) = 1 \cdot in$$

Max. Reinforcement Spacing:

$$MaxSpacing_b := \min(1.5 \cdot t_{panel}, 18 \cdot in) = 12 \cdot in$$

$$GeneralSpace_{panel} := \begin{cases} \text{"NG, min. clear distance"} & \text{if } S_b < MinSpacing_b \\ \text{"NG, max. space exceeded"} & \text{if } S_b > MaxSpacing_b \\ \text{"OK"} & \text{otherwise} \end{cases} = \text{"OK"}$$

2.4.10 Secondary Reinforcement – Temperature & Shrinkage

Recall:

Temp Bar Number: $N_v = 6$

Temp Bar Diameter: $D_v = 0.75 \cdot in$

Temp Bar Area: $A_v = 0.442 \cdot in^2$

(AASHTO GFRP 2.9.6)

$$T_{ratio} := \max\left(\frac{3132 \cdot ksi \cdot ksi}{E_f \cdot f_{yd.panel}}, 0.0014\right) = 5.555 \times 10^{-3}$$

$$T_{ratio} := \min(T_{ratio}, 0.0036) = 3.6 \times 10^{-3}$$

$$A_{s.temp} := b_{panel} \cdot t_{panel} \cdot T_{ratio} = 0.346 \cdot in^2$$

Minimum T&S steel spacing: $S_{temp} := \min\left(12 \cdot in, \frac{12in \cdot A_v}{A_{s.temp}}\right) = 12 \cdot in$

$$CheckTempReinf_{panel} := \begin{cases} \text{"Spacing exceeds 3x thickness"} & \text{if } S_{temp} > 3 \cdot t_{panel} \\ \text{"Spacing exceeds 12 in."} & \text{if } S_{temp} > 12 \cdot in \\ \text{"OK"} & \text{otherwise} \end{cases}$$

$$\boxed{CheckTempReinf_{panel} = \text{"OK"}}$$

2.5 GFRP Reinforced Concrete Cap – Moment & Shear (Vertical Loading)

Tedds calculation version 1.0.37

Loading

Dead - Loading (kips/ft)

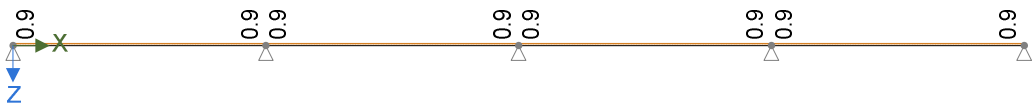

Earth - Loading (kips)

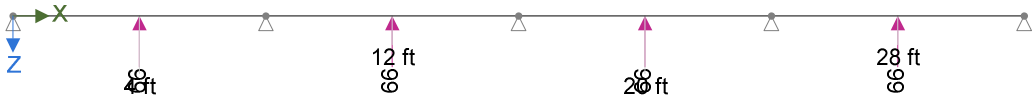

Load combination factors

Load combination	Dead	Live	Earth
AASHTO Load Combinations (Strength)	1.25	1.75	1.50
1.0D + 1.0L + 1.0E (Service)	1.00	1.00	1.00

Member Loads

Member	Load case	Load Type	Orientation	Description
Member	Dead	UDL	GlobalZ	0.9 kips/ft at 0 ft to 32 ft
Member	Earth	Point load	GlobalZ	-66 kips at 4 ft
Member	Earth	Point load	GlobalZ	-66 kips at 12 ft
Member	Earth	Point load	GlobalZ	-66 kips at 20 ft
Member	Earth	Point load	GlobalZ	-66 kips at 28 ft

Results

Forces

Strength combinations - Moment envelope (kip_ft)

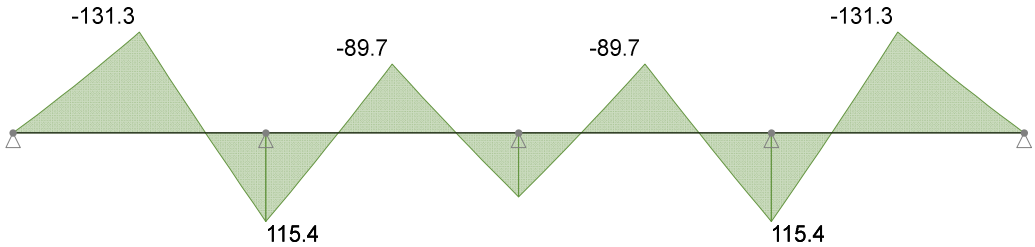

Strength combinations - Shear envelope (kips)

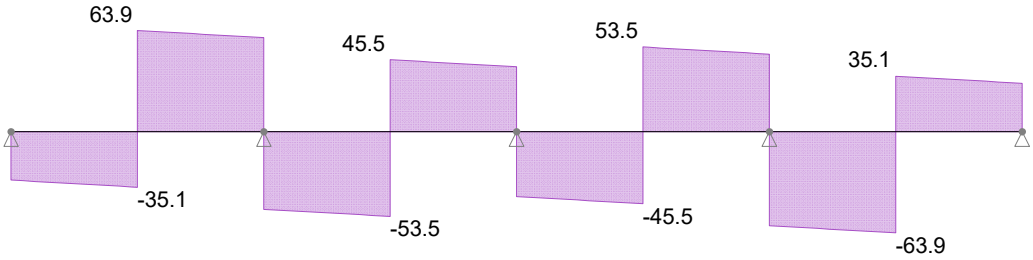

Member results

Envelope - Strength combinations

Member	Position (ft)	Shear force (kips)		Moment (kip_ft)	
Member	4	63.921	-35.079	-131.317 (min)	
	24	49.013	-59.421	115.367 (max)	
	28	35.079	-63.921 (max abs)	-131.317 (min)	

1.0D + 1.0L + 1.0E (Service) - Moment (kip_ft)

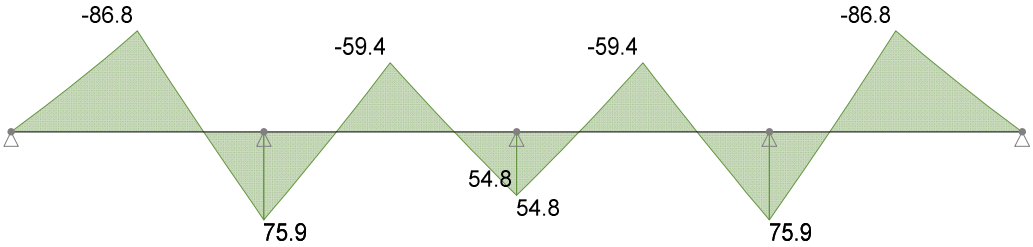

1.0D + 1.0L + 1.0E (Service) - Shear (kips)

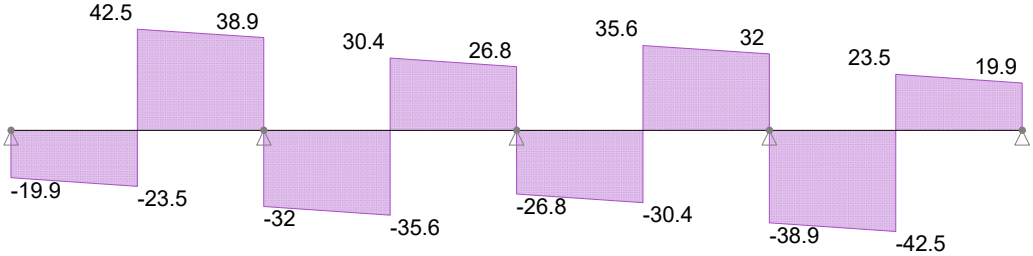

Member results

Load combination: 1.0D + 1.0L + 1.0E (Service)

Member	Position (ft)	Shear force (kips)		Moment (kip_ft)	
Member	4	42.49	-23.51	-86.841 (min)	
	24	32.041	-38.89	75.919 (max)	

Member	Position (ft)	Shear force (kips)		Moment (kip_ft)	
	28	23.51	-42.49 (max abs)	-86.841 (min)	

2.6 GFRP Reinforced Concrete Cap - Reinforcement

2.6.1 Dimensions & Properties

Cap Beam Span: $L_{cap} := 8.0 \cdot ft$

Cap Height: $h_{cap} := 24in$

Cap Width: $b_{cap} := 36 \cdot in$

Concrete Compressive Strength: $f_c := 5 \cdot ksi$

Concrete Ultimate Strain: $\varepsilon_c := 0.003$

Concrete unit weight: $w_c := 145 \cdot pcf$

Clear Cover: $cc := 2 \cdot in$

Flexure Bar Number: $N_b := 7$

Stirrup Bar Number: $N_v := 5$

Number of T&B Flexure Bars: $Q_{TB.b} := 6$

Number of Side Flexure Bars: $Q_{S.b} := 3$

Flexure Bar Side Spacing: $S_{S.b} := \frac{h_{cap} - 2 \cdot cc}{Q_{S.b} - 1} = 10 \cdot in$

Stirrup Bar Spacing: $S_v := 5 \cdot in$

Flexure Bar T&B Spacing: $S_{TB.b} := \frac{b_{cap} - 2 \cdot cc}{Q_{TB.b} - 1} = 6.4 \cdot in$

Flexure Bar Diameter: $D_b := \frac{N_b \cdot in}{8} = 0.875 \cdot in$

Stirrup Bar Diameter: $D_v := \frac{N_v \cdot in}{8} = 0.625 \cdot in$

Flexure Bar Area: $A_b := \pi \frac{D_b^2}{4} = 0.601 \cdot in^2$

Stirrup Bar Area: $A_v := \pi \frac{D_v^2}{4} = 0.307 \cdot in^2$

Estimated Max aggregate size: $a_{agg} := 0.75$ (inches)

2.6.2 Vertical Loading

Anchor Force: $F_a = 2.75 \cdot \frac{kip}{ft}$

Anchor Spacing: $S_{anchor} = 8 \cdot ft$

Batter Slope: $B := \frac{1}{3}$ Batter Angle: $\theta_b := atan(B) = 18.435 \cdot deg$

Vertical Force: $F_{vertical} := \frac{F_a}{\tan(\theta_b)} = 8.25 \cdot \frac{kip}{ft}$

Results from TeklaTedds Analysis - Vertical load from anchor + self-weight:

Service Max Positive Moment: $M_{s.positive.v} := 75.9 \cdot kip \cdot ft$

Service Max Negative Moment: $M_{s.negative.v} := 86.8 \cdot kip \cdot ft$

Ultimate Max Positive Moment: $M_{u.positive.v} := 115.4 \cdot kip \cdot ft$

Ultimate Max Negative Moment: $M_{u.negative.v} := 131.3 \cdot kip \cdot ft$

Design Ultimate Moment: $M_{u.cap.v} := \max(M_{u.positive.v}, M_{u.negative.v}) = 131.3 \cdot kip \cdot ft$

Distance to GFRP Centroid: $d_v := h_{cap} - cc - D_v - \frac{D_b}{2} = 20.938 \cdot in$

2.6.3 Flexural Strength

Flexure Bar Area: $A_f := A_b \cdot Q_{TB.b} = 3.608 \cdot in^2$

Flexure Bar Number: $N_b = 7$

GFRP Tensile Modulus of Elasticity: $E_f := 8700ksi$

GFRP Min. Tensile Load Flexure: $P_{t.1} := 54.1 \cdot kip$

GFRP Yield Strength: $f_{yu.cap} := \frac{P_{t.1}}{A_b} = 89.969 \cdot ksi$

Enviro. Reduction Factor: $C_E := 0.7$

GFRP Design Yield Strength: $f_{yd.cap} := C_E \cdot f_{yu.cap} = 62.978 \cdot ksi$ *(AASHTO GFRP 2.4.2.1)*

Strain in Concrete: $\varepsilon_c := 0.003$

Equivalent Rectangular Concrete Stress Distribution Factor:

$$\beta_1 := \begin{cases} 0.85 & \text{if } 2500psi \le f_c \le 4000psi \\ 0.85 - 0.05 \cdot \frac{(f_c - 4000psi)}{1000psi} & \text{if } 4000psi < f_c < 8000psi \\ 0.65 & \text{if } f_c \ge 8000psi \end{cases} = 0.8$$

2.6.4 Effective Strength at the Strength & Extreme Event Limit State

GFRP Reinforment Ratio: $\rho_f := \frac{A_f}{b_{cap} \cdot d_v} = 4.787 \times 10^{-3}$ *(AASHTO GFRP 2.6.3)*

Max Tensile Stress in GFRP-Effective Strength:

$$f_f := \sqrt{\frac{(E_f \cdot \varepsilon_c)^2}{4} + \left(\frac{0.85 \cdot \beta_1 \cdot f_c}{\rho_f}\right) \cdot E_f \cdot \varepsilon_c} - 0.5 \cdot E_f \cdot \varepsilon_c = 123.732 \cdot ksi$$

$$\text{Type} := \begin{cases} \text{"Concrete Crushing"} & \text{if } f_f \le f_{yd.cap} \\ \text{"GFRP Rupture"} & \text{if } f_f > f_{yd.cap} \end{cases} = \text{"GFRP Rupture"}$$

GFRP Tensile Strain:

$$\varepsilon_f := \frac{f_f}{E_f} = 0.014$$

Tensile Strain

$$\varepsilon_{yd} := \frac{f_{yd.cap}}{E_f} = 7.239 \times 10^{-3}$$

Guarantee DesignTensile Strain

$$a_{cap} := \begin{cases} \beta_1 \cdot \frac{\varepsilon_c}{\varepsilon_c + \varepsilon_{yd}} \cdot d_v & \text{if } f_f > f_{yd.cap} \\ \frac{A_f \cdot f_f}{0.85 \cdot f_c \cdot b_{cap}} & \text{otherwise} \end{cases} = 4.908 \cdot in$$

Axis Depth at balance:

$$c_{b.cap} := \frac{a_{cap}}{\beta_1} = 6.135 \cdot in$$

Nominal Moment Capacity:

$$M_{n.cap} := \begin{cases} A_f \cdot f_{yd.cap} \cdot \left(d_v - \frac{a_{cap}}{2}\right) & \text{if } f_f > f_{yd.cap} \\ A_f \cdot f_f \cdot \left(d_v - \frac{a_{cap}}{2}\right) & \text{otherwise} \end{cases} = 349.987 \cdot kip \cdot ft$$

Resistance Factor:

(AASHTO GFRP 2.5.5.2)

$$\phi_{cap} := \begin{cases} 0.75 & \text{if } \varepsilon_f \le 0.80 \cdot \varepsilon_{yd} \\ \left(1.55 - \frac{\varepsilon_f}{\varepsilon_{yd}}\right) & \text{if } 0.80 \cdot \varepsilon_{yd} < \varepsilon_f < \varepsilon_{yd} \\ 0.55 & \text{otherwise} \end{cases} = 0.55$$

Design Flexure Resistance:

$$M_{r.cap} := \phi_{cap} \cdot M_{n.cap} = 192.493 \cdot kip \cdot ft$$

Check Moment Capacity:

Moment Ratio: $$M_{ratio} := \frac{M_{u.cap.v}}{M_{r.cap}} = 0.682$$

$$CheckM_{wall.v} := if\left(max\left(M_{ratio}\right) \le 1, "OK", "NO\ GOOD"\right)$$

$$CheckM_{wall.v} = "OK"$$

2.6.5 Minimum Flexural Reinforcement

The minimum flexural reinforcement requirement prevents a sudden failure upon ultimate loading.

Concrete Modulus of Rupture: *(AASHTO LFRD 5.4.2.6)*

$$f_r := 0.24 \cdot \sqrt{f_c \cdot ksi} = 0.537 \cdot ksi$$

Section Modulus: $$S_r := \frac{b_{cap} \cdot h_{cap}^2}{6} = 3.456 \times 10^3 \cdot in^3$$

Max Cracking Moment: $$M_{cr.cap} := 1.6 \cdot f_r \cdot S_r = 247.291 \cdot kip \cdot ft$$ *(AASHTO GFRP 2.6.3.3)*

Min. Required Factored Flexure Resistance: $$M_{min.cap} := min\left(1.33 \cdot M_{u.cap.v}, M_{cr.cap}\right) = 174.629 \cdot kip \cdot ft$$

Vertical Flexure Capacity of Cap: $$M_{r.cap} = 192.493 \cdot kip \cdot ft$$

Moment Ratio: $M_{min.ratio} := \frac{M_{min.cap}}{M_{r.cap}} = 0.907$

$$Check_{MinReinf.cap.v} := \begin{cases} \text{"OK"} & \text{if } M_{min.cap} \le M_{r.cap} \\ \text{"NO GOOD"} & \text{otherwise} \end{cases} = \text{"OK"}$$

$Check_{MinReinf.cap.v} = \text{"OK"}$

2.6.6 Creep Rupture

Moments due to dead load and sustained portion of live load included in Service I load combination.

(AASHTO GFRP 2.5.3)

Creep Rupture Reduction Factor: $C_c := 0.3$

Creep Rupture Limit Stress: $f_{f.creep} := C_c \cdot f_{yd.cap} = 18.893 \cdot ksi$

Service Sustained Moment: $M_{creep.cap} := \max(M_{s.positive.v}, M_{s.negative.v}) = 86.8 \cdot kip \cdot ft$

Correction Facor: $K_1 := 1.0$

(AASHTO LFRD 5.4.2.4)

Concrete Modulus of Elasticity: $E_{c.elas} := 120000 \cdot K_1 \cdot \left(\frac{w_c}{pcf \cdot 1000}\right)^2 \left(\frac{f_c}{ksi}\right)^{0.33} \cdot ksi = 4.291 \times 10^3 \cdot ksi$

Modular Ratio: $n_f := \frac{E_f}{E_{c.elas}} = 2.027$

Ratio of Depth of Neutral Axis to Reinf. Depth: $k := \sqrt{2 \cdot \rho_f \cdot n_f + (\rho_f \cdot n_f)^2} - \rho_f \cdot n_f = 0.109$

Cracked Moment of Inertia: $I_{cr.cap} := \frac{b_{cap} \cdot d_v^3}{3} \cdot k^3 + A_f \cdot n_f \cdot (d_v - k \cdot d_v)^2 = 2.689 \times 10^3 \cdot in^4$

Max sustained tensile stress: $f_{fs.creep} := \frac{n_f \cdot d_v \cdot (1 - k)}{I_{cr.cap}} \cdot M_{creep.cap} = 14.657 \cdot ksi$

Rupture Ratio: $Creep_{ratio} := \frac{f_{fs.creep}}{f_{f.creep}} = 0.776$

$$Check_{creep.rup.v} := \begin{cases} \text{"OK"} & \text{if } f_{fs.creep} \le f_{f.creep} \\ \text{"NO GOOD"} & \text{otherwise} \end{cases} = \text{"OK"}$$

$Check_{creep.rup.v} = \text{"OK"}$

2.6.7 Longitudinal Spacing Requirements

To control width of cracking. *(AASHTO GFRP 2.6.7)*

Bond Reduction Factor: $C_b := 0.83$

Max. Crack Width Limit: $w_{crack} := 0.028 \cdot in$

$$MaxBarSpace_{v.cap} := \min\left(1.15 \cdot \frac{C_b \cdot E_f \cdot w_{crack}}{f_{fs.creep}} - 2.5 \cdot cc, 0.92 \cdot \frac{C_b \cdot E_f \cdot w_{crack}}{f_{fs.creep}}\right) = 10.864 \cdot in$$

Recall Bar Spacing: $S_{TB.b} = 6.4 \cdot in$

$$Check_{BarSpace.cap} := \begin{cases} \text{"OK"} & \text{if } S_{TB.b} \le MaxBarSpace_{v.cap} \\ \text{"NO GOOD"} & \text{otherwise} \end{cases} = \text{"OK"}$$

$Check_{BarSpace.cap} = \text{"OK"}$

Tensile check in GFRP at service limit state and crack width.

Thickness of cc from extreme tension fiber to center of flexural GFRP:

$$d_c := h_{cap} - d_v = 3.062 \cdot in$$

Distance ratio of [neutral axis to extreme tension fiber] to [neutral axis to center of tensile reinf] :

$$\xi := \frac{(h_{cap} - k \cdot d_v)}{(d_v - k \cdot d_v)} = 1.164$$

$$GFRPMaxd_c := \frac{(C_b \cdot E_f \cdot w_{crack})}{(2 \cdot f_{fs.creep} \cdot \xi)} = 5.925 \cdot in$$

$$CheckGFRPd_c := \begin{cases} \text{"OK"} & \text{if } d_c \le GFRPMaxd_c \\ \text{"NO GOOD"} & \text{otherwise} \end{cases} = \text{"OK"}$$

$$\boxed{CheckGFRPd_c = \text{"OK"}}$$

Reinforcement Check per AASHTO GFRP 2.9.3.

Cast-in-Place Concrete

Min. Reinforcement Spacing:

$$MinSpacing_b := \max(1.5 \cdot D_b, 1.5 \cdot a_{agg} \cdot in, 1.5 \cdot in) = 1.5 \cdot in$$

Max. Reinforcement Spacing:

$$MaxSpacing_b := \min(1.5 \cdot h_{cap}, 18 \cdot in) = 18 \cdot in$$

$$GeneralSpace_{Cap} := \begin{cases} \text{"NG, min. clear distance"} & \text{if } S_{TB.b} < MinSpacing_b \\ \text{"NG, max. space exceeded"} & \text{if } S_{TB.b} > MaxSpacing_b \\ \text{"OK"} & \text{otherwise} \end{cases} = \text{"OK"}$$

2.6.8 Shear

Results from TeklaTedds Analysis - Vertical live load from anchor + self-weight:

Service Max Shear: $V_{s.v} := 42.5 \cdot kip$

Ultimate Max Shear: $V_{u.v} := 63.9 \cdot kip$

Design Ultimate Moment: $V_{u.cap.v} := V_{u.v} = 63.9 \cdot kip$

Effective Shear Depth: $d_{eff} := d_v - \frac{a_{cap}}{2} = 18.957 \cdot in$ *(AASHTO GFRP 2.7.2.8)*

$$d_{eff} := \max(d_{eff}, 0.9 \cdot d_v, 0.72 \cdot h_{cap}) = 18.957 \cdot in$$

Effective Shear Width: $b_{eff} := b_{cap} - cc - D_v - \frac{D_b}{2} = 32.938 \cdot in$

2.6.9 Shear Resistance of Concrete

(AASHTO GFRP 2.7.3.6)

Longitudinal Strain:

$$\varepsilon_f := \frac{\left(\max\left(\frac{M_{u.cap.v}}{d_{eff}}, V_{u.cap.v}\right)\right) + V_{u.cap.v}}{E_f \cdot A_f} = 6.269 \times 10^{-3}$$

$$\varepsilon_f := \min(\varepsilon_f, 0.006) = 6 \times 10^{-3}$$

Angle of inclination of diagonal compressive stresses: $\theta_p := 45deg$

Factor of diagonally cracked concrete to transmit to tension and shear: $\beta := 5 \cdot k = 0.543$

For concrete sections not subjected to axial tension and containing at least the min. amount of transverse reinforcement specified in GFRP 2.7.2.4.

(AASHTO GFRP 2.7.3.4)

Shear Resistance of Concrete: $V_c := 0.0316 \cdot \beta \cdot \sqrt{f_c \cdot ksi} \cdot b_{eff} \cdot d_{eff} = 23.821 \cdot kip$

2.6.10 Shear Resistance of Transverse Reinforcement

(AASHTO GFRP 2.7.3.5)

Stirrup Bar Number: $N_v = 5$

GFRP Min. Tensile Load: $P_{t.1} := 29.1 \cdot kip$

Stirrup Bar Diameter: $D_v = 0.625 \cdot in$

Stirrup Bar Area: $A_v = 0.307 \cdot in^2$

GFRP Yield Strength: $f_{yu.cap.v} := \frac{P_{t.1}}{A_v} = 94.851 \cdot ksi$

Enviro. Reduction Factor: $C_E := 0.7$

GFRP Design Yield Strength: $f_{yd.cap.v} := C_E \cdot f_{yu.cap.v} = 66.396 \cdot ksi$ *(AASHTO GFRP 2.4.2.1)*

Internal Radius of Bent GFRP bar: $r_b := 3 \cdot D_v = 1.875 \cdot in$ *(AASHTO GFRP 6.6.4)*

(AASHTO GFRP 2.7.3.5)

GFRP Design Strength of Bent bar: $f_{fb.cap.v} := \min\left(0.05 \cdot \frac{r_b}{D_v} + 0.3, 1\right) \cdot f_{yd.cap.v} = 29.878 \cdot ksi$

$f_{fb.cap.v} := \min(f_{fb.cap.v}, f_{yd.cap.v}) = 29.878 \cdot ksi$

GFRP Design Strength of Transverse Bar: $f_{fv.cap.v} := 0.004 \cdot E_f = 34.8 \cdot ksi$

$f_{fv.cap.v} := \min(f_{fv.cap.v}, f_{fb.cap.v}) = 29.878 \cdot ksi$

Area of Transverse Reinforcement within distance s:

$$A_{fv.cap} := A_v \cdot 2 = 0.614 \cdot in^2$$ (2) stirrup legs

Stirrup Bar Spacing:

$$S_v = 5 \cdot in$$

Min. Area of Transverse Reinforcement:

$$A_{fv.cap.min} := 0.05 \cdot \frac{b_{eff} \cdot S_v}{\frac{f_{fv.cap.v}}{ksi}} = 0.276 \cdot in^2$$

$$CheckMinTransReinf := \begin{cases} \text{"OK"} & \text{if } A_{fv.cap.min} \le A_{fv.cap} \\ \text{"NO GOOD"} & \text{otherwise} \end{cases} = \text{"OK"}$$

Shear Resistance of GFRP:

$$V_f := \frac{A_{fv.cap} \cdot f_{fv.cap.v} \cdot d_{eff} \cdot \cot(\theta_p)}{S_v} = 69.092 \cdot kip$$

2.6.11 Shear Check

Nominal Shear Resistance: $V_n := V_c + V_f = 92.913 \cdot kip$

Ultimate Shear: $V_{u.cap.v} = 63.9 \cdot kip$

Resistance Factor Shear: $\phi_v := 0.75$

Factored Shear Resistance: $V_{r.cap} := \phi_v \cdot V_n = 69.685 \cdot kip$

Conc. Shear Ratio: $V_{conc.ratio} := \dfrac{V_{u.cap.v}}{V_{r.cap}} = 0.917$

$$TransReinf_v := \begin{cases} \text{"OK"} & \text{if } V_{u.cap.v} \le V_{r.cap} \\ \text{"Redesign"} & \text{otherwise} \end{cases} = \text{"OK"}$$

$$\boxed{TransReinf_v = \text{"OK"}}$$

2.6.12 Maximum Spacing of Transverse Reinforcement

(AASHTO GFRP 2.7.2.6)

$$MaxTransSpacing := \begin{cases} \min(0.5 \cdot d_{eff}, 24 \cdot in) & \text{if } TransReinf_v = \text{"OK"} \\ \text{"N/A"} & \text{otherwise} \end{cases} = 9.422 \cdot in$$

2.7 Precast Steel-Reinforced Concrete Batter Pile (Compression)

Horizontal force on the wall: 21.9 kips
Axial force on batter pile: 69.5 kips
Design Pile Spacing: 8-ft

2.7.1 AllPile Results

VERTICAL ANALYSIS

Figure 1

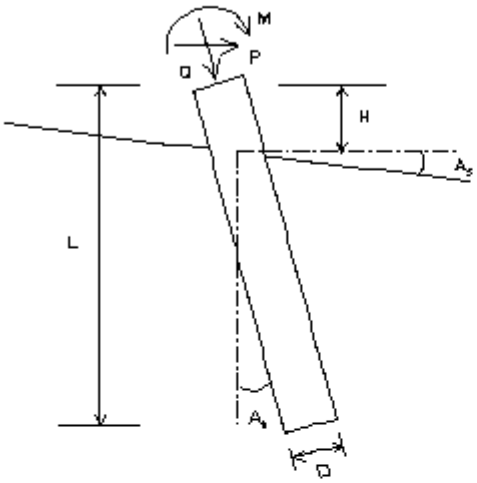

Driving Concrete Pile

Loads:
Load Factor for Vertical Loads= 1.0
Load Factor for Lateral Loads= 1.0
Loads Supported by Pile Cap= 0 %
Shear Condition: Static

(with Load Factor)
Vertical Load, Q= 69.5 -kp

Profile:
Pile Length, L= 35.0 -ft
Top Height, H= 9.33 -ft
Slope Angle, As= 0.0
Batter Angle, Ab= 18.4

Soil Data:

Depth -ft	Gamma -lb/f3	Phi	C -kp/f2	K -lb/i3	e50 or Dr %	Nspt
0	114.9	30.0	0.00	50.8	45.73	15

Pile Data:

Depth -ft	Width -in	Area -in2	Per. -in	I -in4	E -kp/i2	Weight -kp/f
0.0 35.0	14	213.0	56.0	3207.6	4420	0.211

Vertical Capacity:
Weight above Ground= 1.87 Total Weight= 4.94-kp *Soil Weight is not included
Side Resistance (Down)= 82.957-kp Side Resistance (Up)= 51.051-kp
Tip Resistance (Down)= 72.539-kp Tip Resistance (Up)= 0.000-kp
Total Ultimate Capacity (Down) Qult= 155.496-kp Total Ultimate Capacity (Up)= 55.989-kp
Total Allowable Capacity (Down) Qallow= 70.680-kp Total Allowable Capacity (Up) Qallow= 28.692-kp
OK! Qallow > Q

Settlement Calculation:
At Q= 69.50-kp Settlement= 0.03010-in
At Xallow= 1.00-in Q= 99999.00000-kp

Note: If the program cannot find a result or the result exceeds the upper limit. The result will be displayed as 99999.

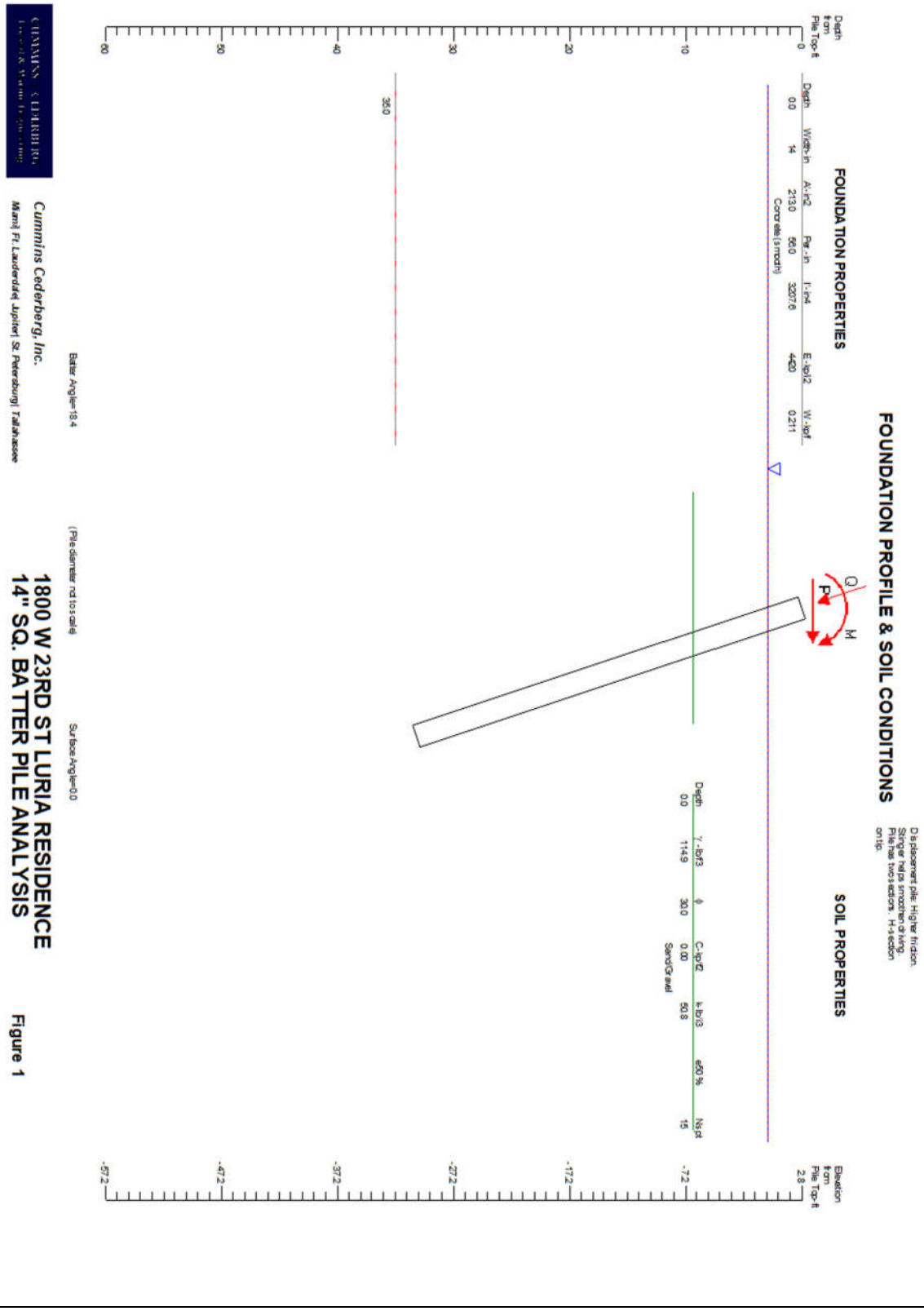
FOUNDATION PROFILE & SOIL CONDITIONS
FOUNDATION PROPERTIES
Depth Width-in A-in2 Per.-in I-in4 E-kpsi2 W-kpf
0.0 14 213.0 56.0 3207.6 4.00 0.211
Concrete (smooth)
SOIL PROPERTIES
Depth γ-lbf/3 φ C-kpf/2 k-lbf/3 ε50-% Nspt
0.0 114.9 30.0 0.00 50.8 15
Sand/Gravel
Q
P
M
Elevation from Pile Top-ft
2.8
-7.2
-17.2
-27.2
-37.2
-47.2
-57.2
Depth from Pile Top-ft
0
10
20
30
40
50
60
36.0
Batter Angle=18.4
(Pile diameter not to scale)
Surface Angle=0.0
Cummins Cederberg, Inc.
Miami| Ft. Lauderdale| Jupiter| St. Petersburg| Tallahassee
1800 W 23RD ST LURIA RESIDENCE
14" SQ. BATTER PILE ANALYSIS
Figure 1

ULTIMATE CAPACITY vs FOUNDATION DEPTH

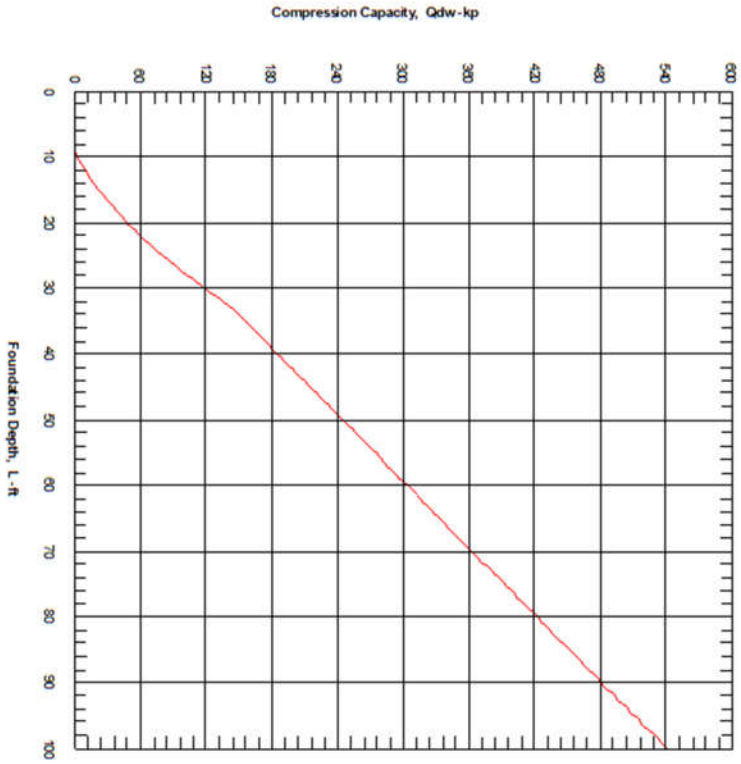

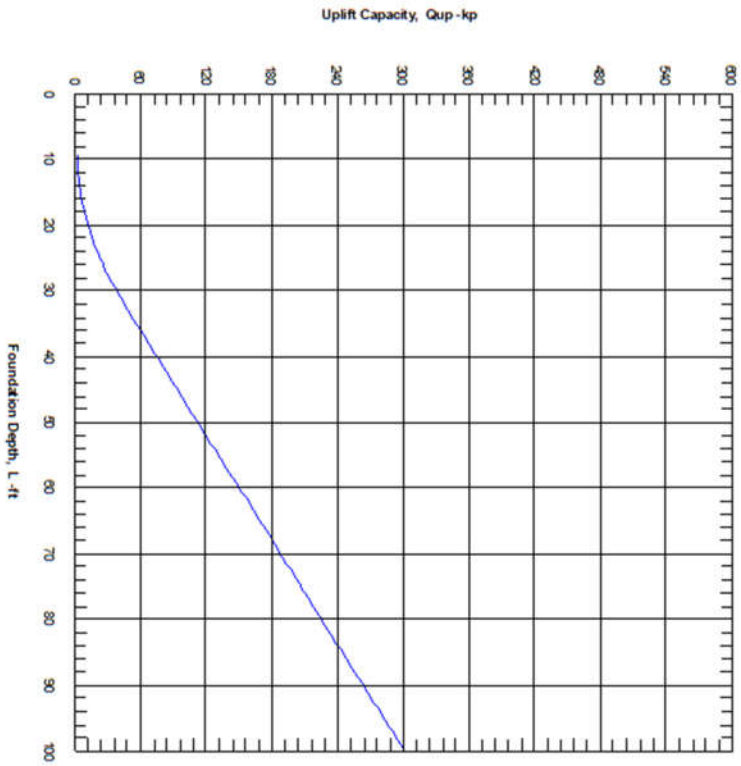

Downward and Uplift Capacity vs Pile Length

The results are for single section pile. Multiple sections may not be correct!

****

Length -ft	Qtip -kp	Qside -kp	Q_dw -kp	Qd_alw -kp	Weight -kp	Qsid* -kp	Q_up -kp	Qu_alw -kp
9.33	0.03	0.00	0.0	0.01	1.87	0.00	1.87	2.08
10.25	2.85	0.11	3.0	1.34	1.98	0.07	2.04	2.23
11.16	5.70	0.43	6.1	2.79	2.09	0.26	2.35	2.44
12.08	8.55	0.96	9.5	4.32	2.20	0.59	2.79	2.71
12.99	11.40	1.70	13.1	5.96	2.31	1.05	3.35	3.04
13.91	14.25	2.66	16.9	7.69	2.42	1.64	4.05	3.43
14.83	17.10	3.83	20.9	9.52	2.53	2.36	4.88	3.88
15.74	19.95	5.22	25.2	11.44	2.63	3.21	5.85	4.39
16.66	22.80	6.81	29.6	13.46	2.74	4.19	6.94	4.96
17.57	25.66	8.63	34.3	15.58	2.85	5.31	8.16	5.58
18.49	28.51	10.65	39.2	17.80	2.96	6.55	9.52	6.27
19.40	31.36	12.88	44.2	20.11	3.07	7.93	11.00	7.02
20.32	34.21	15.33	49.5	22.52	3.18	9.44	12.62	7.83
21.24	37.06	18.00	55.1	25.02	3.29	11.07	14.37	8.69
22.15	39.91	20.87	60.8	27.63	3.40	12.84	16.25	9.62
23.07	42.76	23.96	66.7	30.33	3.51	14.74	18.26	10.60
23.98	45.61	27.26	72.9	33.12	3.62	16.78	20.40	11.65
24.90	48.46	30.77	79.2	36.02	3.73	18.94	22.67	12.75
25.82	51.31	34.50	85.8	39.01	3.84	21.23	25.07	13.92
26.73	54.16	38.44	92.6	42.09	3.95	23.66	27.61	15.14
27.65	57.01	42.59	99.6	45.28	4.06	26.21	30.27	16.42
28.56	59.86	46.96	106.8	48.56	4.17	28.90	33.07	17.77
29.48	62.71	51.54	114.3	51.93	4.28	31.72	35.99	19.17
30.39	65.56	56.33	121.9	55.41	4.39	34.66	39.05	20.63
31.31	68.41	61.33	129.7	58.98	4.50	37.74	42.24	22.15
32.23	71.26	66.55	137.8	62.64	4.61	40.96	45.56	23.73
33.14	72.48	71.95	144.4	65.65	4.72	44.28	48.99	25.37
34.06	72.50	77.37	149.9	68.12	4.83	47.61	52.44	27.01
34.97	72.63	82.82	155.4	70.66	4.94	50.97	55.90	28.65
35.89	72.57	88.24	160.8	73.09	5.05	54.30	59.34	30.29
36.81	72.51	93.64	166.1	75.52	5.15	57.63	62.78	31.92
37.72	72.62	99.11	171.7	78.06	5.26	60.99	66.26	33.57
38.64	72.59	104.53	177.1	80.51	5.37	64.33	69.70	35.21
39.55	72.60	109.96	182.6	82.98	5.48	67.67	73.15	36.85
40.47	72.47	115.31	187.8	85.35	5.59	70.96	76.55	38.47
41.39	72.60	120.82	193.4	87.92	5.70	74.35	80.06	40.13
42.30	72.63	126.27	198.9	90.41	5.81	77.70	83.52	41.78
43.22	72.53	131.62	204.2	92.80	5.92	81.00	86.92	43.40
44.13	72.54	137.05	209.6	95.27	6.03	84.34	90.37	45.04

2.8 Precast Steel-Reinforced Concrete King Pile (Tension)

2.8.1 Pressure Redistribution

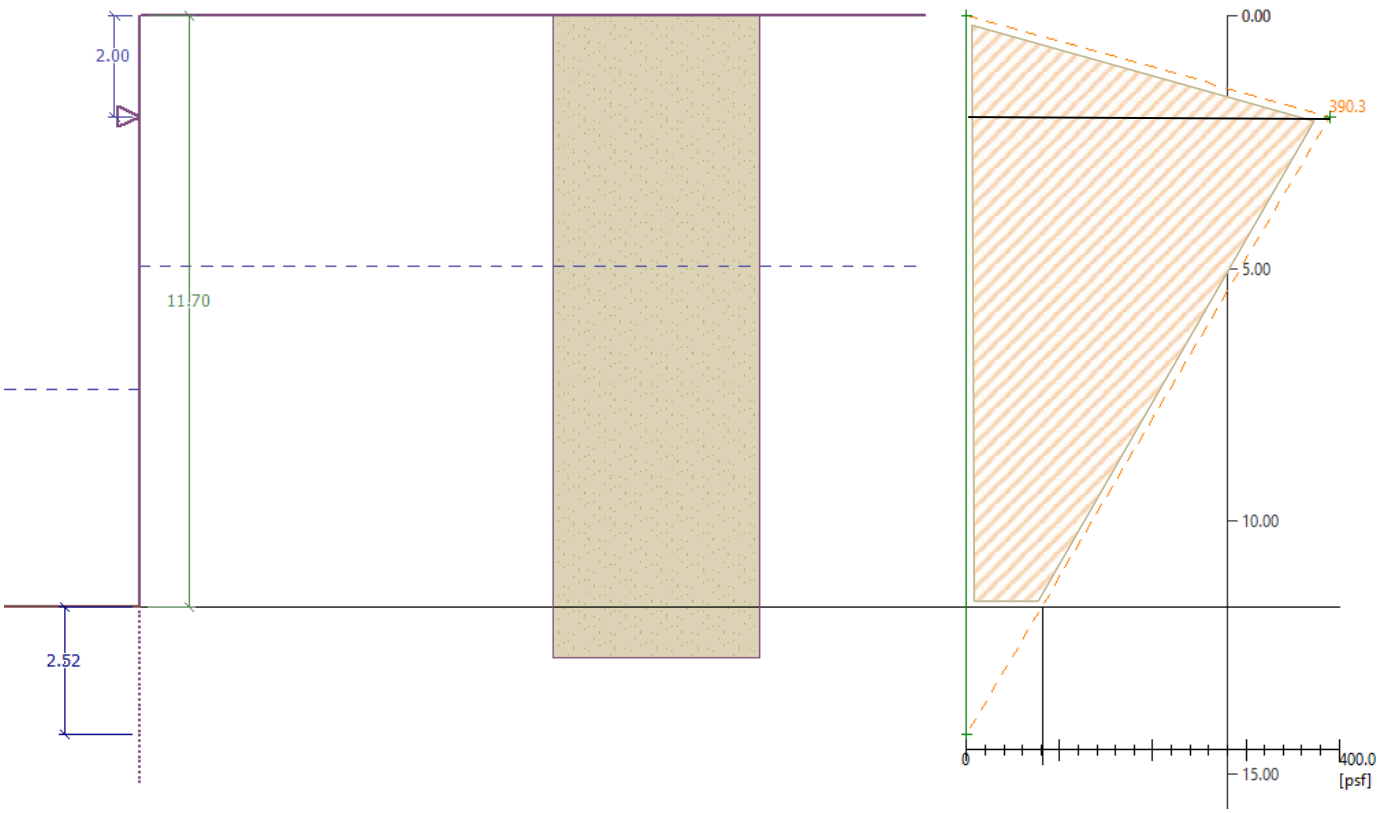

$$Area1 = \frac{2\text{ ft} \times 390.3\text{ psf}}{2} = 390.3\ plf \qquad Area2 = \frac{390.3\text{ psf} + 80\text{ psf}}{2} \times (11.7\ ft - 2\ ft) = 2{,}280.96\ plf$$

$$Lateral\ Earth\ Pressure = 390.3\text{ plf} + 2280.96\text{ plf} = \mathbf{2{,}671.26\ plf}$$

$$Angle\ of\ Friction\ (\delta) = \mathbf{20°}$$

$$Friction\ Downward\ Force\ (Ff) = 2{,}671.26\ plf \times (tan20°) = \mathbf{972.3\ plf}$$

2.8.2 Dead Loads

$$Concrete\ Cap = 3\ ft \times 2\ ft \times 0.15\ kcf = \mathbf{0.9\ klf}$$

$$Concrete\ Panel = \frac{8\ in}{12} \times 11.33\ ft \times 0.15\ kcf = \mathbf{1.13\ klf}$$

$$Concrete\ Pile = 14in \times 14in \times 35\ ft \times 0.15\ kcf = \mathbf{7.15\ kips}$$

2.8.3 Tension on King Pile

Horizontal force on the wall: 21.9 kips
Vertical force on the wall: 65.9 kips
Design Pile Spacing: 8-ft

$$Tension\ (T) = 65.9\ kips - 8ft(0.972klf + 0.9klf + 1.13klf) - 7.15\ kips = \mathbf{31.8\ kips}$$

2.8.4 AllPile Results

VERTICAL ANALYSIS

Figure 1

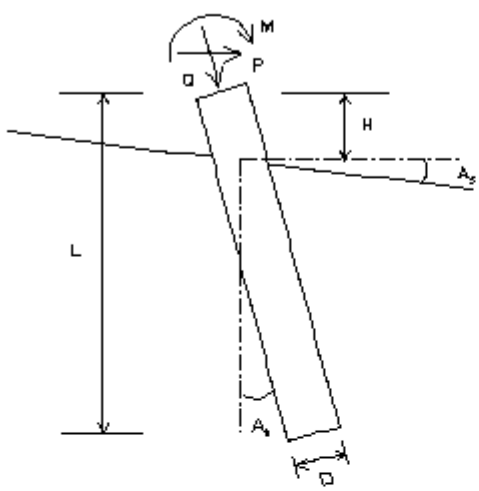

Driving Concrete Pile

Loads:
Load Factor for Vertical Loads= 1.0
Load Factor for Lateral Loads= 1.0
Loads Supported by Pile Cap= 0 %
Shear Condition: Static

(with Load Factor)
Vertical Load, Q= -31.8 -kp

Profile:
Pile Length, L= 36.0 -ft
Top Height, H= 9.33 -ft
Slope Angle, As= 0
Batter Angle, Ab= 0

Soil Data:

Depth -ft	Gamma -lb/f3	Phi	C -kp/f2	K -lb/i3	e50 or Dr %	Nspt
0	119.8	30.0	0.00	50.8	45.73	15

Pile Data:

Depth -ft	Width -in	Area -in2	Per. -in	I -in4	E -kp/i2	Weight -kp/f
0.0 36.0	14	213.0	56.0	3207.6	4420	0.211

Vertical Capacity:
Weight above Ground= 1.97 Total Weight= 5.33-kp *Soil Weight is not included
Side Resistance (Down)= 97.664-kp Side Resistance (Up)= 60.101-kp
Tip Resistance (Down)= 79.708-kp Tip Resistance (Up)= 0.000-kp
Total Ultimate Capacity (Down) Qult= 177.372-kp Total Ultimate Capacity (Up)= 65.432-kp
Total Allowable Capacity (Down) Qallow= 80.624-kp Total Allowable Capacity (Up) Qallow= 33.242-kp
OK! Qallow > Q

Settlement Calculation:
At Q= -31.80-kp Settlement= 0.00000-in
At Xallow= -1.00-in Q= 99999.00000-kp

Note: If the program cannot find a result or the result exceeds the upper limit. The result will be displayed as 99999.

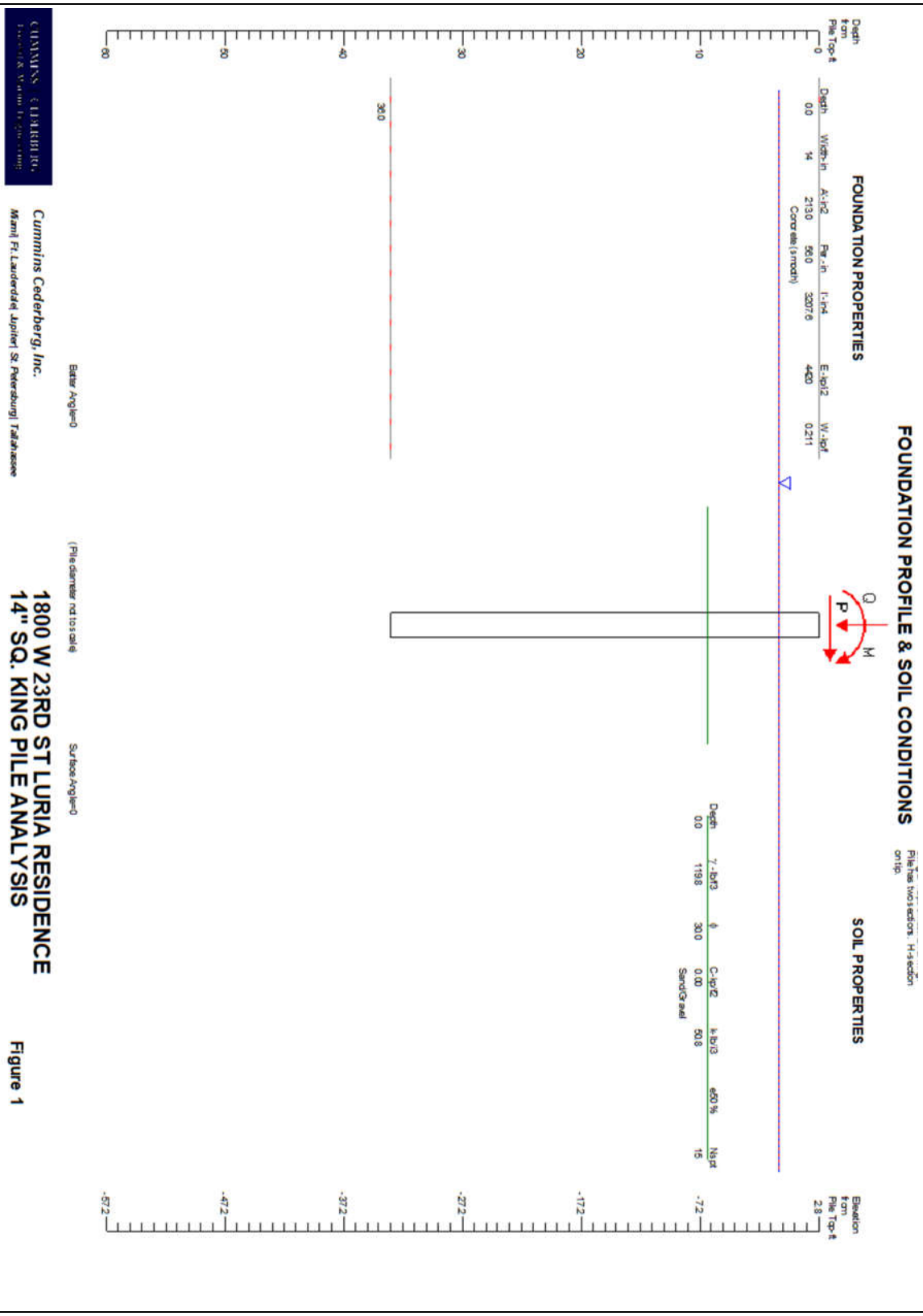
FOUNDATION PROFILE & SOIL CONDITIONS
FOUNDATION PROPERTIES
Depth from Pile Top-ft
Depth
Width-in
A-in2
Flex-in
I-in4
E-kpi2
W-kpif
0.0
14
213.0
56.0
3207.6
4400
0.211
Concrete (smooth)
Q
P
M
SOIL PROPERTIES
Pile has two sections: H-section on tip.
Depth
γ-lbf3
φ
C-kpf2
k-lbf3
ε50 %
Nspt
0.0
119.8
30.0
0.00
50.8
15
Sand/Gravel
Elevation from Pile Top-ft
2.8
-7.2
-17.2
-27.2
-37.2
-47.2
-57.2
0
10
20
30
40
50
60
36.0
Batter Angle=0
(Pile diameter not to scale)
Surface Angle=0
Cummins Cederberg, Inc.
Miami| Ft. Lauderdale| Jupiter| St. Petersburg| Tallahassee
1800 W 23RD ST LURIA RESIDENCE
14" SQ. KING PILE ANALYSIS
Figure 1

ULTIMATE CAPACITY vs FOUNDATION DEPTH

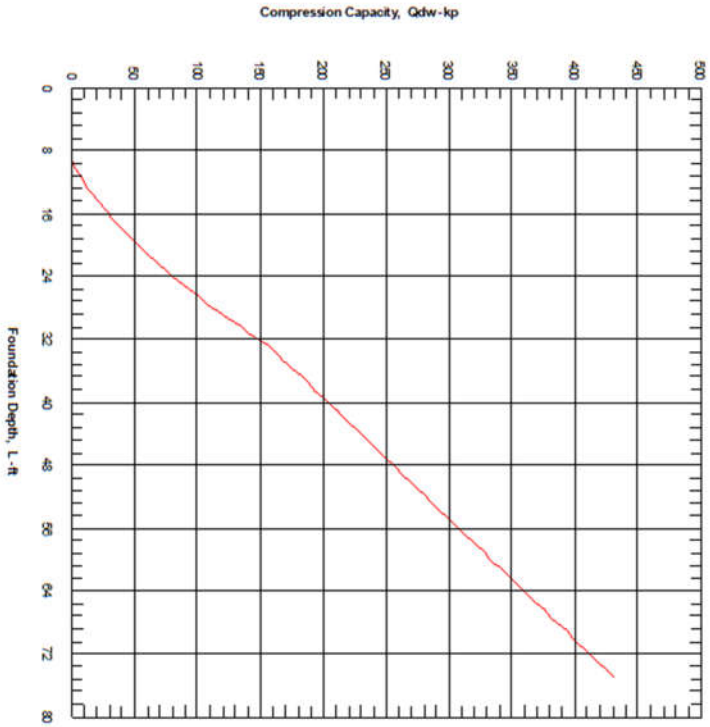

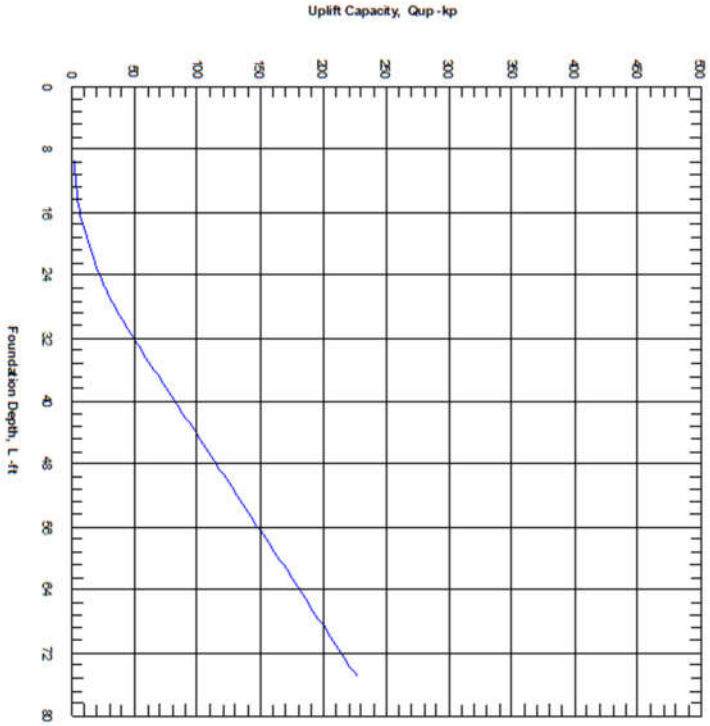

Downward and Uplift Capacity vs Pile Length

The results are for single section pile. Multiple sections may not be correct!

****

Length -ft	Qtip -kp	Qside -kp	Q_dw -kp	Qd_alw -kp	Weight -kp	Qsid* -kp	Q_up -kp	Qu_alw -kp
9.33	0.03	0.00	0.0	0.02	1.97	0.00	1.97	2.19
9.99	2.27	0.06	2.3	1.06	2.05	0.04	2.09	2.30
10.66	4.54	0.25	4.8	2.17	2.14	0.15	2.29	2.44
11.32	6.81	0.55	7.4	3.34	2.22	0.34	2.56	2.62
11.98	9.07	0.98	10.1	4.57	2.30	0.60	2.91	2.83
12.65	11.34	1.53	12.9	5.85	2.39	0.94	3.33	3.08
13.31	13.61	2.21	15.8	7.19	2.47	1.36	3.83	3.36
13.97	15.88	3.01	18.9	8.59	2.55	1.85	4.40	3.68
14.64	18.15	3.93	22.1	10.04	2.64	2.42	5.05	4.03
15.30	20.42	4.97	25.4	11.54	2.72	3.06	5.78	4.41
15.96	22.69	6.14	28.8	13.10	2.80	3.78	6.58	4.83
16.63	24.95	7.43	32.4	14.72	2.89	4.57	7.46	5.29
17.29	27.22	8.84	36.1	16.39	2.97	5.44	8.41	5.77
17.95	29.49	10.37	39.9	18.12	3.06	6.38	9.44	6.30
18.62	31.76	12.03	43.8	19.91	3.14	7.40	10.54	6.85
19.28	34.03	13.81	47.8	21.75	3.22	8.50	11.72	7.44
19.94	36.30	15.71	52.0	23.64	3.31	9.67	12.98	8.07
20.61	38.57	17.74	56.3	25.59	3.39	10.92	14.31	8.73
21.27	40.84	19.89	60.7	27.60	3.47	12.24	15.71	9.42
21.93	43.10	22.16	65.3	29.66	3.56	13.64	17.19	10.15
22.60	45.37	24.55	69.9	31.78	3.64	15.11	18.75	10.91
23.26	47.64	27.07	74.7	33.96	3.72	16.66	20.38	11.71
23.92	49.91	29.71	79.6	36.19	3.81	18.28	22.09	12.54
24.59	52.18	32.47	84.6	38.48	3.89	19.98	23.87	13.41
25.25	54.45	35.35	89.8	40.82	3.98	21.76	25.73	14.31
25.91	56.72	38.36	95.1	43.22	4.06	23.61	27.67	15.24
26.58	58.98	41.49	100.5	45.67	4.14	25.53	29.68	16.21
27.24	61.25	44.75	106.0	48.18	4.23	27.54	31.76	17.21
27.90	63.52	48.12	111.6	50.75	4.31	29.61	33.92	18.25
28.57	65.79	51.62	117.4	53.37	4.39	31.77	36.16	19.32
29.23	68.06	55.24	123.3	56.05	4.48	33.99	38.47	20.43
29.89	70.33	58.99	129.3	58.78	4.56	36.30	40.86	21.57
30.56	72.60	62.85	135.4	61.57	4.64	38.68	43.32	22.74
31.22	74.86	66.84	141.7	64.41	4.73	41.13	45.86	23.95
31.88	77.13	70.95	148.1	67.31	4.81	43.66	48.48	25.19
32.55	79.40	75.19	154.6	70.27	4.90	46.27	51.17	26.47
33.21	79.71	79.50	159.2	72.37	4.98	48.93	53.91	27.77
33.87	79.74	83.83	163.6	74.35	5.06	51.58	56.65	29.07
34.54	79.65	88.13	167.8	76.26	5.15	54.23	59.38	30.37
35.20	79.80	92.48	172.3	78.31	5.23	56.91	62.14	31.68
35.86	79.66	96.76	176.4	80.19	5.31	59.55	64.86	32.97
36.53	79.79	101.12	180.9	82.23	5.40	62.23	67.62	34.28
37.19	79.64	105.38	185.0	84.10	5.48	64.85	70.33	35.57

2.9 Development of Hooked Bars in Tension

2.9.1 From Prestressed King and Batter Piles

Bar Number: $N_b := 5$

Bar Diameter: $D_b := \frac{N_b \cdot in}{8} = 0.625 \cdot in$

Bar Area: $A_b := \pi \frac{D_b^2}{4} = 0.307 \cdot in^2$

GFRP Min. Tensile Load: $P_{t.1} := 29.1 \cdot kip$

GFRP Yield Strength: $f_{yu} := \frac{P_{t.1}}{A_b} = 94.851 \cdot ksi$

Enviro. Reduction Factor: $C_E := 0.7$

GFRP Design Yield Strength: $f_{yd} := C_E \cdot f_{yu} = 66.396 \cdot ksi$ *(AASHTO GFRP 2.4.2.1)*

Internal Radius of Bent GFRP bar: $r_b := 3 \cdot D_b = 1.875 \cdot in$ *(AASHTO GFRP 6.6.4)*

(AASHTO GFRP 2.7.3.5)

GFRP Design Strength of Bent bar: $f_{fb} := \left(0.05 \cdot \frac{r_b}{D_b} + 0.3\right) \cdot f_{yd} = 29.878 \cdot ksi$

Max.Tension on Piles: $T_{piles} := 31.8 \cdot kip$

Number of Hood Dowels: $No_{dowels} := 4$

$$Check_{dowelcapacity} := \begin{cases} \text{"OK"} & \text{if } T_{piles} \le f_{fb} \cdot A_b \cdot No_{dowels} \\ \text{"Increase Dowels"} & \text{otherwise} \end{cases} = \text{"OK"}$$

Development Length for Standard Hooks in Tension:

(AASHTO GFRP 2.9.7.4.3)

$$L_{dh} := \begin{cases} 63.2 \cdot \dfrac{D_b}{\sqrt{\dfrac{f_c}{ksi}}} & \text{if } f_{yd} \le 75 \cdot ksi \\ \dfrac{f_{yd}}{1.2} \cdot \dfrac{D_b}{\sqrt{f_c \cdot ksi}} & \text{if } 75 \cdot ksi < f_{yd} < 150 \cdot ksi \\ \left(126.4 \cdot \dfrac{D_b}{\sqrt{\dfrac{f_c}{ksi}}}\right) & \text{otherwise} \end{cases} = 17.665\,in$$

$$Check_{dl} := \begin{cases} \text{"OK"} & \text{if } L_{dh} > \left(\max\left(12 \cdot D_b, 9 \cdot in\right)\right) \\ \text{"NG, Use greater of 12Db and 9in"} & \text{otherwise} \end{cases} = \text{"OK"}$$

Required Tail Length Extension:

(AASHTO GFRP 2.7.2.7.2)

$$Ext_{dh} := 12 \cdot D_b = 7.5\,in$$

3 DOCK ENGINEERING ANALYSIS

3.1 Methodology

Tekla Tedds, a structural analysis software, was used to analyze the proposed concrete dock beam and general design formulas on the proposed concrete slab to obtain bending moment and shear strengths.

AllPile, a pile analysis software, was utilized to verify the strength of the dock piles in compression due to live and dead loads applied to the dock. A lateral analysis was also verified due to proposed mooring loads from a maximum vessel of 40-ft with a maximum sustained wind speed of 40 MPH.

3.2 GFRP Reinforced Concrete Slab – Moment & Shear

Using per foot analysis of reinforced concrete slab: $b_{slab} := 12in$

Slab Self-Weight: $SW_{slab} := b_{slab} \cdot t_{slab} \cdot w_c = 0.097 \cdot \frac{kip}{ft}$

Dock Live Load: $LL := LL \cdot 1 \cdot ft = 0.1 \cdot \frac{kip}{ft}$

Dock Dead Load: $DL := DL \cdot 1ft = 0.02 \frac{kip}{ft}$

Linear load due to slab self-weight + dead load + dock live load

$$W_{slab.unfactored} := 1 \cdot (SW_{slab}) + 1 \cdot (DL) + 1 \cdot (LL) = 0.217 \cdot \frac{kip}{ft}$$

$$W_{slab.factored} := 1.25 \cdot (SW_{slab} + DL) + 1.75 \cdot (LL) = 0.321 \cdot \frac{kip}{ft}$$

Service Moment: $M_{s.slab} := \frac{W_{slab.unfactored} \cdot L_{slab}^2}{8} = 1.144 \cdot kip \cdot ft$

Service Shear: $V_{s.slab} := \frac{W_{slab.unfactored} \cdot L_{slab}}{2} = 0.704 \cdot kip$

Ultimate Moment: $M_{u.slab} := \frac{W_{slab.factored} \cdot L_{slab}^2}{8} = 1.694 \cdot kip \cdot ft$

Ultimate Shear: $V_{u.slab} := \frac{W_{slab.factored} \cdot L_{slab}}{2} = 1.043 \cdot kip$

3.3 GFRP Reinforced Concrete Slab – Reinforcement

Reinforced Concrete slab supported by seawall and dock beam. Slab clear span of 6'-6" and 8" thichness. Dock elevation at +4.5' NAVD.

3.3.1 Dimensions & Properties

Slab Span: $L_{slab} := 6.5 \cdot ft$

Slab Thickness: $t_{slab} := 8in$

Concrete Compressive Strength: $f_c := 5 \cdot ksi$

Concrete unit weight: $w_c := 145 \cdot pcf$

Clear Cover: $cc := 1in$

Flexure Bar Number: $N_b := 5$

Flexure Bar Spacing: $S_b := 10 \cdot in$

Flexure Bar Diameter: $D_b := \frac{N_b \cdot in}{8} = 0.625 \cdot in$

Flexure Bar Area: $A_b := \pi \frac{D_b^2}{4} = 0.307 \cdot in^2$

Temp Bar Number: $N_v := 5$

Temp Bar Diameter: $D_v := \frac{N_v \cdot in}{8} = 0.625 \cdot in$

Temp Bar Area: $A_v := \pi \frac{D_v^2}{4} = 0.307 \cdot in^2$

Dock Live Load: $LL := 100 \cdot psf$

Dock Dead Load: $DL := 20 \cdot psf$

Estimated Max aggregate size: $a_{agg} := 0.75$ (inches)

Distance to Steel Centroid: $d_{slab} := t_{slab} - cc - D_v - \frac{D_b}{2} = 6.063 \cdot in$

3.3.2 Flexural Strength of Slab (Primary Reinforcement)

Flexure Bar Area per segment: $A_f := A_b \cdot \frac{1 \cdot ft}{(S_b)} = 0.368 \cdot in^2$

Flexure Bar Number: $N_b = 5$

GFRP Tensile Modulus of Elasticity: $E_f := 6500ksi$

GFRP Min. Tensile Load Flexure: $P_{t.1} := 29.1 \cdot kip$

GFRP Yield Strength: $f_{yu.slab} := \frac{P_{t.1}}{A_b} = 94.851 \cdot ksi$

Enviro. Reduction Factor: $C_E := 0.7$

GFRP Design Yield Strength: $f_{yd.slab} := C_E \cdot f_{yu.slab} = 66.396 \cdot ksi$ *(AASHTO GFRP 2.4.2.1)*

Strain in Concrete: $\varepsilon_c := 0.003$

Equivalent Rectangular Concrete Stress Distribution Factor:

$$\beta_1 := \begin{cases} 0.85 & \text{if } 2500psi \le f_c \le 4000psi \\ 0.85 - 0.05 \cdot \frac{(f_c - 4000psi)}{1000psi} & \text{if } 4000psi < f_c < 8000psi \\ 0.65 & \text{if } f_c \ge 8000psi \end{cases} = 0.8$$

3.3.3 Effective Strength at the Strength & Extreme Event Limit State

GFRP Reinforment Ratio: $\rho_f := \frac{A_f}{b_{slab} \cdot d_{slab}} = 5.061 \times 10^{-3}$ *(AASHTO GFRP 2.6.3)*

Max Tensile Stress in GFRP-Effective Strength:

$$f_f := \sqrt{\frac{(E_f \cdot \varepsilon_c)^2}{4} + \left(\frac{0.85 \cdot \beta_1 \cdot f_c}{\rho_f}\right) \cdot E_f \cdot \varepsilon_c} - 0.5 \cdot E_f \cdot \varepsilon_c = 120.014 \cdot ksi$$

$$Type := \begin{cases} \text{"Concrete Crushing"} & \text{if } f_f \le f_{yd.slab} \\ \text{"GFRP Rupture"} & \text{if } f_f > f_{yd.slab} \end{cases} = \text{"GFRP Rupture"}$$

GFRP Tensile Strain:

$$\varepsilon_f := \frac{f_f}{E_f} = 0.014$$

Tensile Strain

$$\varepsilon_{yd} := \frac{f_{yd.slab}}{E_f} = 7.632 \times 10^{-3}$$

Guarantee DesignTensile Strain

$$a_{slab} := \begin{cases} \beta_1 \cdot \frac{\varepsilon_c}{\varepsilon_c + \varepsilon_{yd}} \cdot d_{slab} & \text{if } f_f > f_{yd.slab} \\ \frac{A_f \cdot f_f}{0.85 \cdot f_c \cdot b_{slab}} & \text{otherwise} \end{cases} = 1.369 \cdot in$$

Axis Depth at balance:

$$c_{b.slab} := \frac{a_{slab}}{\beta_1} = 1.711 \cdot in$$

Nominal Moment Capacity:

$$M_{n.slab} := \begin{cases} A_f \cdot f_{yd.slab} \cdot \left(d_{slab} - \frac{a_{slab}}{2}\right) & \text{if } f_f > f_{yd.slab} \\ A_f \cdot f_f \cdot \left(d_{slab} - \frac{a_{slab}}{2}\right) & \text{otherwise} \end{cases} = 10.955 \cdot kip \cdot ft$$

Resistance Factor: *(AASHTO GFRP 2.5.5.2)*

$$\phi_{slab} := \begin{cases} 0.75 & \text{if } \varepsilon_f \le 0.80 \cdot \varepsilon_{yd} \\ \left(1.55 - \dfrac{\varepsilon_f}{\varepsilon_{yd}}\right) & \text{if } 0.80 \cdot \varepsilon_{yd} < \varepsilon_f < \varepsilon_{yd} \\ 0.55 & \text{otherwise} \end{cases} = 0.55$$

Design Flexure Resistance:

$$M_{r.slab} := \phi_{slab} \cdot M_{n.slab} = 6.025 \cdot kip \cdot ft$$

Check Moment Capacity:

Moment Ratio: $$M_{ratio} := \frac{M_{u.slab}}{M_{r.slab}} = 0.281$$

$$CheckM_{wall} := if\left(max\left(M_{ratio}\right) \le 1, \text{"OK"}, \text{"NO GOOD"}\right)$$

$$\boxed{CheckM_{wall} = \text{"OK"}}$$

3.3.4 Shear Check

(AASHTO GFRP 2.7.2.8)

Effective Shear Depth: $$d_v := d_{slab} - \frac{a_{slab}}{2} = 5.378 \cdot in$$

$$d_v := max\left(d_v, 0.9 \cdot d_{slab}, 0.72 \cdot t_{slab}\right) = 5.76 \cdot in$$

3.3.5 Shear Capacity

(AASHTO GFRP 2.7.3.6)

Longitudinal Strain: $$\varepsilon_f := \frac{\left(max\left(\frac{M_{u.slab}}{d_v}, V_{u.slab}\right)\right) + V_{u.slab}}{E_f \cdot A_f} = 1.428 \times 10^{-3}$$

$$\varepsilon_f := \min(\varepsilon_f, 0.006) = 1.428 \times 10^{-3}$$

Angle of inclination of diagonal compressive stresses:

$$\theta_p := 29 + 3500 \cdot \varepsilon_f = 33.997$$

$$\theta_p := 33.997 \cdot deg$$

Crack Spacing Parameter:

$$s_x := d_v = 5.76 \cdot in$$

$$s_{xe} := s_x \cdot \frac{1.38}{a_{agg} + 0.63} = 5.76 \cdot in$$

$$s_{xe} := \max(12 \cdot in, \min(s_{xe}, 80 \cdot in)) = 12 \cdot in$$

Factor of diagonally cracked concrete to transmit to tension and shear:

$$\beta := \left(\frac{4.8}{1 + 750 \cdot \varepsilon_f}\right) \cdot \left(\frac{51}{39 + \frac{s_{xe}}{in}}\right) = 2.318$$

(AASHTO GFRP 2.7.3.4)

Shear Resistance of Concrete:

$$V_c := 0.0316 \cdot \beta \cdot \sqrt{f_c \cdot ksi} \cdot b_{slab} \cdot d_v = 11.321 \cdot kip$$

Ultimate Shear:

$$V_{u.slab} = 1.043 \cdot kip$$

Resistance Factor Shear:

$$\phi_v := 0.75$$

Factored Shear Resistance:

$$V_{r.slab} := \phi_v \cdot V_c = 8.491 \cdot kip$$

Conc. Shear Ratio:

$$V_{conc.ratio} := \frac{V_{u.slab}}{V_{r.slab}} = 0.123$$

$$ReinfReq := \begin{cases} \text{"Verified, No Reinforcement Req."} & \text{if } V_{u.slab} \le V_{r.slab} \\ \text{"Yes"} & \text{otherwise} \end{cases}$$

ReinfReq = "Verified, No Reinforcement Req."

3.3.6 Creep Rupture

(AASHTO GFRP 2.5.3)

Moments due to dead load and sustained portion of live load included in Service I load combination.

Creep Rupture Reduction Factor: $C_c := 0.3$

Creep Rupture Limit Stress: $f_{f.creep} := C_c \cdot f_{yd.slab} = 19.919 \cdot ksi$

Service Sustained Moment: $M_{creep.slab} := M_{s.slab} = 1.144 \cdot kip \cdot ft$

Correction Factor: $K_1 := 1.0$

(AASHTO LFRD 5.4.2.4)

Concrete Modulus of Elasticity: $E_{c.elas} := 120000 \cdot K_1 \cdot \left(\frac{w_c}{pcf \cdot 1000}\right)^2 \left(\frac{f_c}{ksi}\right)^{0.33} \cdot ksi = 4.291 \times 10^3 \cdot ksi$

Modular Ratio: $n_f := \frac{E_f}{E_{c.elas}} = 2.027$

Ratio of Depth of Neutral Axis to Reinf. Depth: $k := \sqrt{2 \cdot \rho_f \cdot n_f + (\rho_f \cdot n_f)^2} - \rho_f \cdot n_f = 0.133$

Cracked Moment of Inertia: $I_{cr.slab} := \frac{b_{slab} \cdot d_{slab}^3}{3} \cdot k^3 + A_f \cdot n_f \cdot (d_{slab} - k \cdot d_{slab})^2 = 22.718 \cdot in^4$

Max sustained tensile stress: $f_{fs.creep} := \frac{n_f \cdot d_{slab} \cdot (1 - k)}{I_{cr.slab}} \cdot M_{creep.slab} = 6.438 \cdot ksi$

Rupture Ratio: $Creep_{ratio} := \frac{f_{fs.creep}}{f_{f.creep}} = 0.323$

$$Check_{creep.rup} := \begin{cases} \text{"OK"} & \text{if } f_{fs.creep} \le f_{f.creep} \\ \text{"NO GOOD"} & \text{otherwise} \end{cases} = \text{"OK"}$$

$Check_{creep.rup} = \text{"OK"}$

3.3.7 Minimum Flexural Reinforcement

The minimum flexural reinforcement requirement prevents a sudden failure upon ultimate loading.

Concrete Modulus of Rupture: *(AASHTO LFRD 5.4.2.6)*

$f_r := 0.24 \cdot \sqrt{f_c \cdot ksi} = 0.537 \cdot ksi$

Section Modulus: $S_r := \frac{t_{slab}^2 \cdot b_{slab}}{6} = 128 \cdot in^3$

Cracking Moment: $M_{cr.slab} := 1.6 \cdot f_r \cdot S_r = 9.159 \cdot kip \cdot ft$ *(AASHTO GFRP 2.6.3.3)*

Min. Required Factored Flexure Resistance: $M_{min.slab} := \min(1.33 \cdot M_{u.slab}, M_{cr.slab}) = 2.254 \cdot kip \cdot ft$

Flexure Capacity of Panel: $M_{r.slab} = 6.025 \cdot kip \cdot ft$

Moment Ratio: $M_{min.ratio} := \frac{M_{min.slab}}{M_{r.slab}} = 0.374$

$$Check_{MinReinf.slab} := \begin{cases} \text{"OK"} & \text{if } M_{min.slab} \le M_{r.slab} \\ \text{"NO GOOD"} & \text{otherwise} \end{cases} = \text{"OK"}$$

$Check_{MinReinf.slab} = \text{"OK"}$

3.3.8 Longitudinal Reinforcement

(AASHTO GFRP 2.7.3.7)

Tension due to Shear in longitudinal reinforcement

Required GFRP bar stress: $f_{fr} := \min(f_f, f_{yd.slab}) = 66.396 \cdot ksi$

Provided Primary Reinf: $Long_{prov} := A_f \cdot f_{fr} = 24.444 \cdot kip$

Required Primary Reinf: $Long_{req} := \frac{M_{u.slab}}{d_v \cdot \phi_{slab}} + \frac{V_{u.slab}}{\phi_v} \cdot \cot(\theta_p) = 8.48 \cdot kip$

Primary Reinf. Ratio: $Long_{ratio} := \frac{Long_{req}}{Long_{prov}} = 0.347$

$$Check_{LongReinf} := \begin{cases} \text{"OK"} & \text{if } Long_{req} \le Long_{prov} \\ \text{"NO GOOD"} & \text{otherwise} \end{cases} = \text{"OK"}$$

$Check_{LongReinf} = \text{"OK"}$

3.3.9 Longitudinal Spacing Requirements

To control width of cracking. (AASHTO GFRP 2.6.7)

Bond Reduction Factor: $C_b := 0.83$

Max. Crack Width Limit: $w_{crack} := 0.028 \cdot in$

$$MaxBarSpace_{slab} := \min\left(1.15 \cdot \frac{C_b \cdot E_f \cdot w_{crack}}{f_{fs.creep}} - 2.5 \cdot cc, 0.92 \cdot \frac{C_b \cdot E_f \cdot w_{crack}}{f_{fs.creep}}\right) = 28.891 \cdot in$$

Recall Bar Spacing: $S_b = 10 \cdot in$

$$Check_{BarSpace.slab} := \begin{cases} \text{"OK"} & \text{if } S_b \le MaxBarSpace_{slab} \\ \text{"NO GOOD"} & \text{otherwise} \end{cases} = \text{"OK"}$$

$$\boxed{Check_{BarSpace.slab} = \text{"OK"}}$$

Tensile check in GFRP at service limit state and crack width.

Thickness of cc from extreme tension fiber to center of flexural GFRP: $d_c := t_{slab} - d_{slab} = 1.937 \cdot in$

Distance ratio of [neutral axis to extreme tension fiber] to [neutral axis to center of tensile reinf] : $\xi := \dfrac{(t_{slab} - k \cdot d_{slab})}{(d_{slab} - k \cdot d_{slab})} = 1.369$

$$GFRPMaxd_c := \frac{(C_b \cdot E_f \cdot w_{crack})}{(2 \cdot f_{fs.creep} \cdot \xi)} = 11.472 \cdot in$$

$$CheckGFRPd_c := \begin{cases} \text{"OK"} & \text{if } d_c \le GFRPMaxd_c \\ \text{"NO GOOD"} & \text{otherwise} \end{cases} = \text{"OK"}$$

$$\boxed{CheckGFRPd_c = \text{"OK"}}$$

<u>Reinforcement Check per AASHTO GFRP 2.9.3.</u>

<u>Precast Concrete Slab</u>

Min. Reinforcement Spacing: $MinSpacing_b := \max(D_b, 1.33 \cdot a_{agg} \cdot in, 1.0 \cdot in) = 1 \cdot in$

Max. Reinforcement Spacing: $MaxSpacing_b := \min(1.5 \cdot t_{slab}, 18 \cdot in) = 12 \cdot in$

$$GeneralSpace_{slab} := \begin{cases} \text{"NG, min. clear distance"} & \text{if } S_b < MinSpacing_b \\ \text{"NG, max. space exceeded"} & \text{if } S_b > MaxSpacing_b \\ \text{"OK"} & \text{otherwise} \end{cases} = \text{"OK"}$$

3.3.10 Deflection Check

1. Service Moments

Dead Load Moment:

$$W_{slab.d} := 1 \cdot (SW_{slab}) + 1 \cdot (DL) = 0.117 \cdot \frac{kip}{ft}$$

$$M_{D.slab} := \frac{W_{slab.d} \cdot L_{slab}^2}{8} = 0.616 \cdot kip \cdot ft$$

Live Load Moment:

$$M_{L.slab} := \frac{LL \cdot L_{slab}^2}{8} = 0.528 \cdot kip \cdot ft$$

Sustained Moment:

$$M_{sus.slab} := M_{D.slab} + (0.2 \cdot M_{L.slab}) = 0.722 \cdot kip \cdot ft$$

Total Moment:

$$M_{D.L.slab} := M_{D.slab} + M_{L.slab} = 1.144 \cdot kip \cdot ft$$

2. Modulus of Elasticity & Modular Ratio

(AASHTO 5.4.2.4)

Concrete Modulus of Elasticity:

$$E_{c.elas} = 4.291 \times 10^3 \, ksi$$

Modular Ratio:

$$n_f = 2.027$$

3. Gross & Cracked Section Moment of Inertia

Gross Moment of Inertia:

$$I_{g.slab} := \frac{b_{slab} \cdot t_{slab}^3}{12} = 512 \cdot in^4$$

Ratio of Depth of Neutral Axis to Reinf. Depth:

$$k := \sqrt{2\cdot\rho_f\cdot n_f + (\rho_f\cdot n_f)^2} - \rho_f\cdot n_f = 0.133$$

Cracked Moment of Inertia:

$$I_{cr.slab} := \frac{b_{slab}\cdot d_{slab}^3}{3}\cdot k^3 + A_f\cdot n_f\cdot(d_{slab} - k\cdot d_{slab})^2 = 22.718\cdot in^4$$

Modulus of Rupture: $f_r = 0.537\,ksi$ *(AASHTO 5.4.2.6)*

Distance of neutral axis to extreme tension fiber:

$$y_t := d_{slab} - c_{b.slab} = 4.352\,in$$

$$M_{cr} := f_r\cdot\frac{I_{g.slab}}{y_t} = 5.262\cdot kip\cdot ft$$ *(AASHTO LRFD 2.6.3.4.2-2)*

Ma: Max. moment in a component (Ma is greater or equal to Mcr)

$$M_a := \max(M_{D.L.slab}, M_{cr}) = 5.262\,kip\cdot ft$$

Variation in stiffness:

$$\gamma_d := 1.72 - 0.72\cdot\frac{M_{cr}}{M_a} = 1$$

Effective Moment of Inertia:

$$I_e := \frac{I_{cr.slab}}{1 - \gamma_d\cdot\left(\frac{M_{cr}}{M_a}\right)^2\cdot\left(1 - \frac{I_{cr.slab}}{I_{g.slab}}\right)} = 512\cdot in^4$$

4. Immediate Deflections:

$$\Delta_{D.L} := \frac{5\cdot M_{D.L.slab}\cdot(L_{slab})^2}{48\cdot E_{c.elas}\cdot I_e} = 3.961\times10^{-3}\,in$$

$$\Delta_{sus} := \frac{5\cdot M_{sus.slab}\cdot(L_{slab})^2}{48\cdot E_{c.elas}\cdot I_e} = 2.498\times10^{-3}\,in$$

$$\Delta_{unsus} := \Delta_{D.L} - \Delta_{sus} = 1.462 \times 10^{-3} in$$

5. Incremental Deflections: *(ACI 318-19 Table 24.2.4.1.3)*

6 months: $\xi := 1.2$

$$\Delta_{incr6} := 0.6 \cdot \xi \Delta_{sus} + \Delta_{unsus} = 3.261 \times 10^{-3} in$$

12 months: $\xi := 1.4$

$$\Delta_{incr12} := 0.6 \cdot \xi \Delta_{sus} + \Delta_{unsus} = 3.561 \times 10^{-3} in$$

60 months: $\xi := 2.0$

$$\Delta_{incr60} := 0.6 \cdot \xi \Delta_{sus} + \Delta_{unsus} = 4.46 \times 10^{-3} in$$

6. Allowable Deflections (immediate dead & live load):

$$Slab_{\Delta DL} := \begin{cases} \text{"OK360"} & \text{if } \Delta_{D.L} < \dfrac{L_{slab}}{360} \\ \text{"NO"} & \text{otherwise} \end{cases} = \text{"OK360"}$$

7. Allowable Deflections (incremental):

$$Slab_{\Delta incr} := \begin{cases} \text{"OK360"} & \text{if } \Delta_{incr60} < \dfrac{L_{slab}}{360} \\ \text{"NO"} & \text{otherwise} \end{cases} = \text{"OK360"}$$

3.3.11 Secondary Reinforcement (Temperature & Shrinkage)

Recall:

Temp Bar Number: $N_V = 5$

Temp Bar Diameter: $D_V = 0.625 \cdot in$

Temp Bar Area: $A_V = 0.307 \cdot in^2$

$$T_{ratio} := \max\left(\frac{3132 \cdot ksi \cdot ksi}{E_f \cdot f_{yd.slab}}, 0.0014\right) = 5.422 \times 10^{-3}$$

$$T_{ratio} := \min(T_{ratio}, 0.0036) = 3.6 \times 10^{-3}$$

$$A_{s.temp} := b_{slab} \cdot t_{slab} \cdot T_{ratio} = 0.346 \cdot in^2$$

Minimum T&S steel spacing: $S_{temp} := \min\left(12 \cdot in, \frac{12in \cdot A_v}{A_{s.temp}}\right) = 10.653 \cdot in$

$$CheckTempReinf_{slab} := \begin{cases} \text{"Spacing exceeds 3x thickness"} & \text{if } S_{temp} > 3 \cdot t_{slab} \\ \text{"Spacing exceeds 12 in."} & \text{if } S_{temp} > 12 \cdot in \\ \text{"OK"} & \text{otherwise} \end{cases}$$

$$\boxed{CheckTempReinf_{slab} = \text{"OK"}}$$

3.4 GFRP Reinforced Concrete Beam – Moment & Shear

Tedds calculation version 1.0.37

Geometry

Geometry (ft) - Concrete (ACI normal) - R 22x22

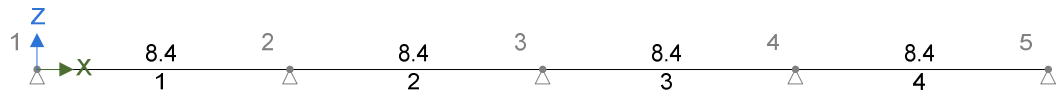

Loading

Dead - Loading (kips/ft)

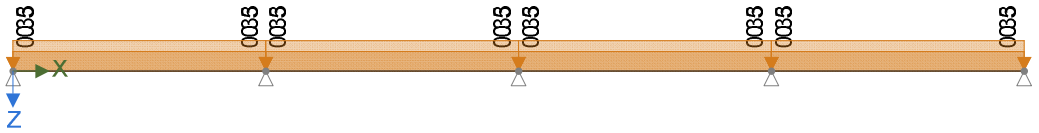

Live - Loading (kips/ft)

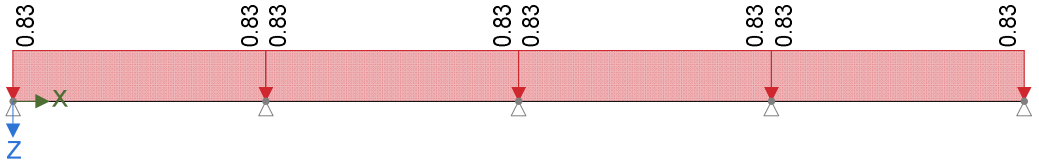

Load combination factors

Load combination	Dead	Live
AASHTO Load Combinations (Strength)	1.25	1.75
1.0D + 1.0L (Service)	1.00	1.00
FATIGUE	1.00	1.75

Member Loads

Member	Load case	Load Type	Orientation	Description
Member	Dead	UDL	GlobalZ	0.33 kips/ft
Member	Dead	UDL	GlobalZ	0.5 kips/ft
Member	Live	UDL	GlobalZ	0.83 kips/ft

Results

Forces

Service combinations - Moment envelope (kip_ft)

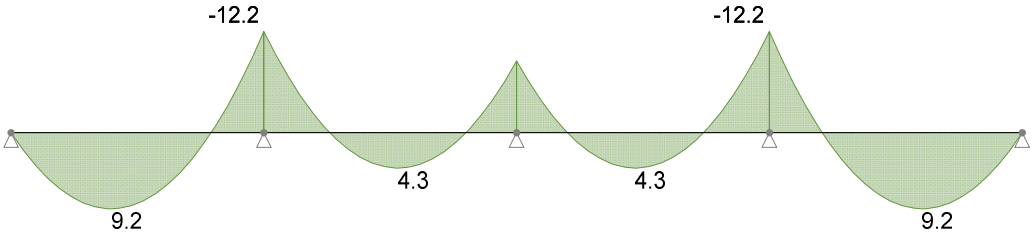

Service combinations - Shear envelope (kips)

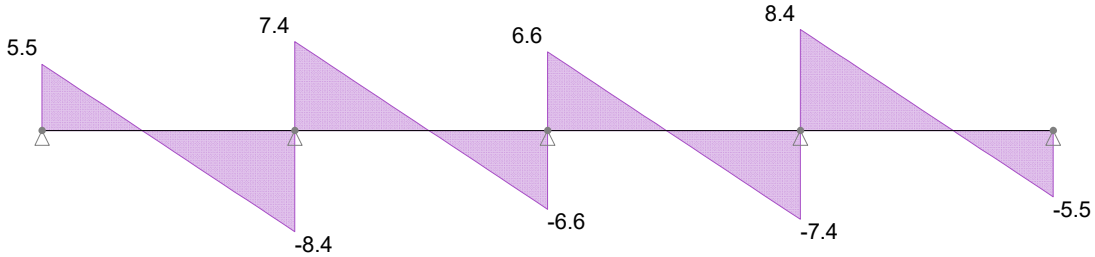

Member results

Envelope - Service combinations

Member	Position (ft)	Shear force (kips)		Moment (kip_ft)	
Member	3.32	0		9.185 (max)	
	8.4	7.403	-8.435	-12.221 (min)	
	25.2	-7.403		-12.221 (min)	

AASHTO Load Combinations (Strength) - Moment (kip_ft)

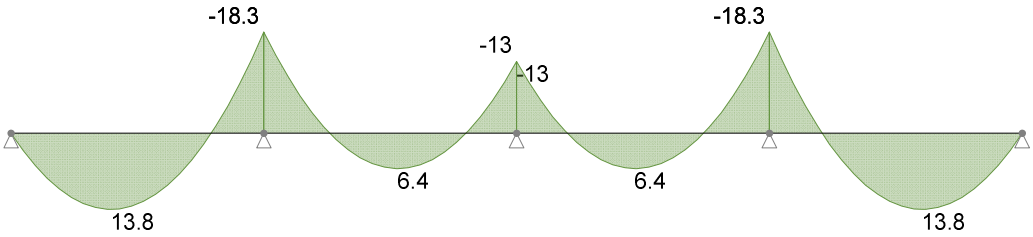

AASHTO Load Combinations (Strength) - Shear (kips)

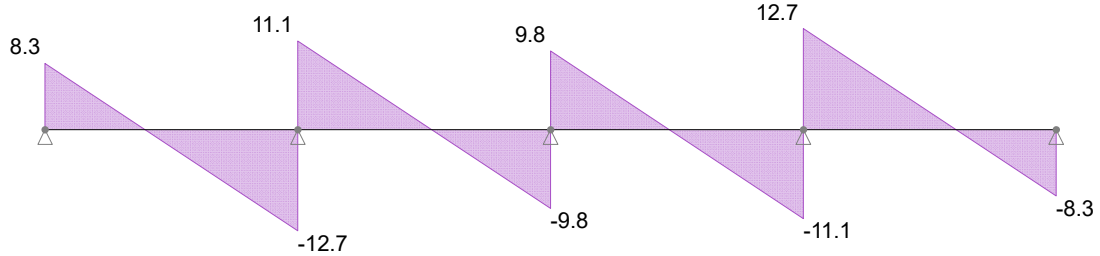

Member results

Load combination: AASHTO Load Combinations (Strength)

Member	Position (ft)	Shear force (kips)		Moment (kip_ft)	
Member	3.32	0		13.783 (max)	
	8.4	11.109	-12.658	-18.339 (min)	
	25.2	-11.109		-18.339 (min)	

3.5 GFRP Reinforced Concrete Beam – Reinforcement

3.5.1 Dimensions & Properties

Beam Span: $L_{beam} := 8.5 \cdot ft$

Beam Height: $h_{cap} := 22in$

Beam Width: $b_{cap} := 22 \cdot in$

Flexure Bar Number: $N_b := 5$

Number of T&B Flexure Bars: $Q_{TB.b} := 3$

Concrete Compressive Strength: $f_c := 5 \cdot ksi$

Concrete Ultimate Strain: $\varepsilon_c := 0.003$

Concrete unit weight: $w_c := 145 \cdot pcf$

Clear Cover: $cc := 2in$

Stirrup Bar Number: $N_v := 4$

Number of Side Flexure Bars: $Q_{S.b} := 3$

Flexure Bar Side Spacing: $S_{S.b} := \frac{h_{cap} - 2 \cdot cc}{Q_{S.b} - 1} = 9 \cdot in$

Stirrup Bar Spacing: $S_v := 8 \cdot in$

Flexure Bar T&B Spacing: $S_{TB.b} := \frac{b_{cap} - 2 \cdot cc}{Q_{TB.b} - 1} = 9 \cdot in$

Flexure Bar Diameter: $D_b := \frac{N_b \cdot in}{8} = 0.625 \cdot in$

Stirrup Bar Diameter: $D_v := \frac{N_v \cdot in}{8} = 0.5 \cdot in$

Flexure Bar Area: $A_b := \pi \frac{D_b^2}{4} = 0.307 \cdot in^2$

Stirrup Bar Area: $A_v := \pi \frac{D_v^2}{4} = 0.196 \cdot in^2$

Estimated Max aggregate size: $a_{agg} := 0.75$ (inches)

3.5.2 Vertical Loading

Results from TeklaTedds Analysis - Vertical live load from dock live load + self-weight:

Service Max Positive Moment: $M_{s.positive.v} := 9.2 \cdot kip \cdot ft$

Service Max Negative Moment: $M_{s.negative.v} := 12.2 \cdot kip \cdot ft$

Ultimate Max Positive Moment: $M_{u.positive.v} := 13.8 \cdot kip \cdot ft$

Ultimate Max Negative Moment: $M_{u.negative.v} := 18.3 \cdot kip \cdot ft$

Design Ultimate Moment: $M_{u.cap.v} := \max(M_{u.positive.v}, M_{u.negative.v}) = 18.3 \cdot kip \cdot ft$

Distance to GFRP Centroid: $d_v := h_{cap} - cc - D_v - \frac{D_b}{2} = 19.188 \cdot in$

3.5.3 Flexural Strength (Vertical Loading)

Flexure Bar Area: $A_f := A_b \cdot Q_{TB.b} = 0.92 \cdot in^2$

Flexure Bar Number: $N_b = 5$

GFRP Tensile Modulus of Elasticity: $E_f := 8700ksi$

GFRP Min. Tensile Load Flexure: $P_{t.1} := 29.1 \cdot kip$

GFRP Yield Strength: $f_{yu.cap} := \frac{P_{t.1}}{A_b} = 94.851 \cdot ksi$

Enviro. Reduction Factor: $C_E := 0.7$

GFRP Design Yield Strength: $f_{yd.cap} := C_E \cdot f_{yu.cap} = 66.396 \cdot ksi$ *(AASHTO GFRP 2.4.2.1)*

Strain in Concrete: $\varepsilon_c := 0.003$

Equivalent Rectangular Concrete Stress Distribution Factor:

$$\beta_1 := \begin{cases} 0.85 & \text{if } 2500psi \le f_c \le 4000psi \\ 0.85 - 0.05 \cdot \frac{(f_c - 4000psi)}{1000psi} & \text{if } 4000psi < f_c < 8000psi \\ 0.65 & \text{if } f_c \ge 8000psi \end{cases} = 0.8$$

3.5.4 Effective Strength at the Strength & Extreme Event Limit State

GFRP Reinforment Ratio: $\rho_f := \frac{A_f}{b_{cap} \cdot d_v} = 2.18 \times 10^{-3}$ *(AASHTO GFRP 2.6.3)*

Max Tensile Stress in GFRP-Effective Strength: $f_f := \sqrt{\frac{(E_f \cdot \varepsilon_c)^2}{4} + \left(\frac{0.85 \cdot \beta_1 \cdot f_c}{\rho_f}\right) \cdot E_f \cdot \varepsilon_c} - 0.5 \cdot E_f \cdot \varepsilon_c = 189.113 \cdot ksi$

$$\text{Type} := \begin{cases} \text{"Concrete Crushing"} & \text{if } f_f \le f_{yd.cap} \\ \text{"GFRP Rupture"} & \text{if } f_f > f_{yd.cap} \end{cases} = \text{"GFRP Rupture"}$$

GFRP Tensile Strain: $\varepsilon_f := \dfrac{f_f}{E_f} = 0.022$ *Tensile Strain*

$\varepsilon_{yd} := \dfrac{f_{yd.cap}}{E_f} = 7.632 \times 10^{-3}$ *Guarantee DesignTensile Strain*

$$a_{cap} := \begin{cases} \beta_1 \cdot \dfrac{\varepsilon_c}{\varepsilon_c + \varepsilon_{yd}} \cdot d_v & \text{if } f_f > f_{yd.cap} \\ \dfrac{A_f \cdot f_f}{0.85 \cdot f_c \cdot b_{cap}} & \text{otherwise} \end{cases} = 4.331 \cdot in$$

Axis Depth at balance: $c_{b.cap} := \dfrac{a_{cap}}{\beta_1} = 5.414 \cdot in$

Nominal Moment Capacity:

$$M_{n.cap} := \begin{cases} A_f \cdot f_{yd.cap} \cdot \left(d_v - \dfrac{a_{cap}}{2}\right) & \text{if } f_f > f_{yd.cap} \\ A_f \cdot f_f \cdot \left(d_v - \dfrac{a_{cap}}{2}\right) & \text{otherwise} \end{cases} = 86.684 \cdot kip \cdot ft$$

Resistance Factor: *(AASHTO GFRP 2.5.5.2)*

$$\phi_{cap} := \begin{cases} 0.75 & \text{if } \varepsilon_f \le 0.80 \cdot \varepsilon_{yd} \\ \left(1.55 - \dfrac{\varepsilon_f}{\varepsilon_{yd}}\right) & \text{if } 0.80 \cdot \varepsilon_{yd} < \varepsilon_f < \varepsilon_{yd} \\ 0.55 & \text{otherwise} \end{cases} = 0.55$$

Design Flexure Resistance:

$M_{r.cap} := \phi_{cap} \cdot M_{n.cap} = 47.676 \cdot kip \cdot ft$

Check Moment Capacity:

Moment Ratio: $M_{ratio} := \frac{M_{u.cap.v}}{M_{r.cap}} = 0.384$

$CheckM_{wall.v} := if\left(max\left(M_{ratio}\right) \le 1, "OK", "NO GOOD"\right)$

$CheckM_{wall.v} = "OK"$

3.5.5 Minimum Flexural Reinforcement

The minimum flexural reinforcement requirement prevents a sudden failure upon ultimate loading.

Concrete Modulus of Rupture: *(AASHTO LFRD 5.4.2.6)*

$f_r := 0.24 \cdot \sqrt{f_c \cdot ksi} = 0.537 \cdot ksi$

Section Modulus: $S_r := \frac{b_{cap} \cdot h_{cap}^2}{6} = 1.775 \times 10^3 \cdot in^3$

Max Cracking Moment: $M_{cr.cap} := 1.6 \cdot f_r \cdot S_r = 126.985 \cdot kip \cdot ft$ *(AASHTO GFRP 2.6.3.3)*

Min. Required Factored Flexure Resistance: $M_{min.cap} := min\left(1.33 \cdot M_{u.cap.v}, M_{cr.cap}\right) = 24.339 \cdot kip \cdot ft$

Vertical Flexure Capacity of Cap: $M_{r.cap} = 47.676 \cdot kip \cdot ft$

Moment Ratio: $M_{min.ratio} := \frac{M_{min.cap}}{M_{r.cap}} = 0.511$

$Check_{MinReinf.cap.v} := \begin{cases} "OK" & \text{if } M_{min.cap} \le M_{r.cap} \\ "NO\ GOOD" & \text{otherwise} \end{cases} = "OK"$

$Check_{MinReinf.cap.v} = "OK"$

3.5.6 Creep Rupture

Moments due to dead load and sustained portion of live load included in Service I load combination. *(AASHTO GFRP 2.5.3)*

Creep Rupture Reduction Factor: $C_c := 0.3$

Creep Rupture Limit Stress: $f_{f.creep} := C_c \cdot f_{yd.cap} = 19.919 \cdot ksi$

Service Sustained Moment: $M_{creep.cap} := \max(M_{s.positive.v}, M_{s.negative.v}) = 12.2 \cdot kip \cdot ft$

Correction Factor: $K_1 := 1.0$

(AASHTO LFRD 5.4.2.4)

Concrete Modulus of Elasticity: $E_{c.elas} := 120000 \cdot K_1 \cdot \left(\frac{w_c}{pcf \cdot 1000}\right)^2 \left(\frac{f_c}{ksi}\right)^{0.33} \cdot ksi = 4.291 \times 10^3 \cdot ksi$

Modular Ratio: $n_f := \frac{E_f}{E_{c.elas}} = 2.027$

Ratio of Depth of Neutral Axis to Reinf. Depth: $k := \sqrt{2 \cdot \rho_f \cdot n_f + (\rho_f \cdot n_f)^2} - \rho_f \cdot n_f = 0.057$

Cracked Moment of Inertia: $I_{cr.cap} := \frac{b_{cap} \cdot d_v^3}{3} \cdot k^3 + A_f \cdot n_f \cdot (d_v - k \cdot d_v)^2 = 620.83 \cdot in^4$

Max sustained tensile stress: $f_{fs.creep} := \frac{n_f \cdot d_v \cdot (1 - k)}{I_{cr.cap}} \cdot M_{creep.cap} = 8.654 \cdot ksi$

Rupture Ratio: $Creep_{ratio} := \frac{f_{fs.creep}}{f_{f.creep}} = 0.434$

$$Check_{creep.rup.v} := \begin{cases} \text{"OK"} & \text{if } f_{fs.creep} \le f_{f.creep} \\ \text{"NO GOOD"} & \text{otherwise} \end{cases} = \text{"OK"}$$

$$\boxed{Check_{creep.rup.v} = \text{"OK"}}$$

3.5.7 Longitudinal Spacing Requirements

To control width of cracking. *(AASHTO GFRP 2.6.7)*

Bond Reduction Factor: $C_b := 0.83$

Max. Crack Width Limit: $w_{crack} := 0.028 \cdot in$

$$MaxBarSpace_{v.cap} := \min\left(1.15 \cdot \frac{C_b \cdot E_f \cdot w_{crack}}{f_{fs.creep}} - 2.5 \cdot cc, 0.92 \cdot \frac{C_b \cdot E_f \cdot w_{crack}}{f_{fs.creep}}\right) = 21.494 \cdot in$$

Recall Bar Spacing: $S_{TB.b} = 9 \cdot in$

$$Check_{BarSpace.cap} := \begin{cases} \text{"OK"} & \text{if } S_{TB.b} \le MaxBarSpace_{v.cap} \\ \text{"NO GOOD"} & \text{otherwise} \end{cases} = \text{"OK"}$$

$$\boxed{Check_{BarSpace.cap} = \text{"OK"}}$$

Tensile check in GFRP at service limit state and crack width.

Thickness of cc from extreme tension fiber to center of flexural GFRP: $d_c := h_{cap} - d_v = 2.812 \cdot in$

Distance ratio of [neutral axis to extreme tension fiber] to [neutral axis to center of tensile reinf] : $\xi := \frac{(h_{cap} - k \cdot d_v)}{(d_v - k \cdot d_v)} = 1.155$

$$GFRPMaxd_c := \frac{(C_b \cdot E_f \cdot w_{crack})}{(2 \cdot f_{fs.creep} \cdot \xi)} = 10.11 \cdot in$$

$$CheckGFRPd_c := \begin{cases} \text{"OK"} & \text{if } d_c \le GFRPMaxd_c \\ \text{"NO GOOD"} & \text{otherwise} \end{cases} = \text{"OK"}$$

$$\boxed{CheckGFRPd_c = \text{"OK"}}$$

Reinforcement Check per AASHTO GFRP 2.9.3.

Cast-in-Place Concrete

Min. Reinforcement Spacing: $MinSpacing_b := \max(1.5 \cdot D_b, 1.5 \cdot a_{agg} \cdot in, 1.5 \cdot in) = 1.5 \cdot in$

Max. Reinforcement Spacing: $MaxSpacing_b := \min(1.5 \cdot h_{cap}, 18 \cdot in) = 18 \cdot in$

$$GeneralSpace_{Cap} := \begin{cases} \text{"NG, min. clear distance"} & \text{if } S_{TB.b} < MinSpacing_b \\ \text{"NG, max. space exceeded"} & \text{if } S_{TB.b} > MaxSpacing_b \\ \text{"OK"} & \text{otherwise} \end{cases} = \text{"OK"}$$

3.5.8 Shear

Results from TeklaTedds Analysis - Vertical load from dock live load + self-weight:

Service Max Shear: $V_{s.v} := 8.4 \cdot kip$

Ultimate Max Shear: $V_{u.v} := 12.7 \cdot kip$

Design Ultimate Moment: $V_{u.cap.v} := V_{u.v} = 12.7 \cdot kip$

Effective Shear Depth: $d_{eff} := d_v - \frac{a_{cap}}{2} = 17.022 \cdot in$ *(AASHTO GFRP 2.7.2.8)*

$$d_{eff} := \max(d_{eff}, 0.9 \cdot d_v, 0.72 \cdot h_{cap}) = 17.269 \cdot in$$

Effective Shear Width: $b_{eff} := b_{cap} - cc - D_v - \frac{D_b}{2} = 19.188 \cdot in$

3.5.9 Shear Resistance of Concrete

(AASHTO GFRP 2.7.3.6)

Longitudinal Strain:

$$\varepsilon_f := \frac{\left(\max\left(\frac{M_{u.cap.v}}{d_{eff}}, V_{u.cap.v}\right)\right) + V_{u.cap.v}}{E_f \cdot A_f} = 3.174 \times 10^{-3}$$

$$\varepsilon_f := \min(\varepsilon_f, 0.006) = 3.174 \times 10^{-3}$$

Angle of inclination of diagonal compressive stresses: $\theta_p := 45$

Factor of diagonally cracked concrete to transmit to tension and shear: $\beta := 5 \cdot k = 0.283$

For concrete sections not subjected to axial tension and containing at least the min. amount of transverse reinforcement specified in GFRP 2.7.2.4.

(AASHTO GFRP 2.7.3.4)

Shear Resistance of Concrete: $V_c := 0.0316 \cdot \beta \cdot \sqrt{f_c \cdot ksi} \cdot b_{eff} \cdot d_{eff} = 6.624 \cdot kip$

3.5.10 Shear Resistance of Transverse Reinforcement

(AASHTO GFRP 2.7.3.5)

Stirrup Bar Number: $N_v = 4$

GFRP Min. Tensile Load: $P_{t.1} := 21.6 \cdot kip$

Stirrup Bar Diameter: $D_v = 0.5 \cdot in$

Stirrup Bar Area: $A_v = 0.196 \cdot in^2$

GFRP Yield Strength: $f_{yu.cap.v} := \frac{P_{t.1}}{A_v} = 110.008 \cdot ksi$

Enviro. Reduction Factor: $C_E := 0.7$

GFRP Design Yield Strength: $f_{yd.cap.v} := C_E \cdot f_{yu.cap.v} = 77.006 \cdot ksi$ *(AASHTO GFRP 2.4.2.1)*

Internal Radius of Bent GFRP bar: $r_b := 3 \cdot D_v = 1.5 \cdot in$ *(AASHTO GFRP 6.6.4)*

(AASHTO GFRP 2.7.3.5)

GFRP Design Strength of Bent bar: $f_{fb.cap.v} := \min\left(0.05 \cdot \frac{r_b}{D_v} + 0.3, 1\right) \cdot f_{yd.cap.v} = 34.652 \cdot ksi$

$f_{fb.cap.v} := \min(f_{fb.cap.v}, f_{yd.cap.v}) = 34.652 \cdot ksi$

GFRP Design Strength of Transverse Bar:

$$f_{fv.cap.v} := 0.004 \cdot E_f = 34.8 \cdot ksi$$

$$f_{fv.cap.v} := \min\left(f_{fv.cap.v}, f_{fb.cap.v}\right) = 34.652 \cdot ksi$$

Area of Transverse Reinforcement within distance s:

$$A_{fv.cap} := A_v \cdot 2 = 0.393 \cdot in^2$$

Stirrup Bar Spacing:

$$S_v = 8 \cdot in$$

Min. Area of Transverse Reinforcement:

$$A_{fv.cap.min} := 0.05 \cdot \frac{b_{eff} \cdot S_v}{\frac{f_{fv.cap.v}}{ksi}} = 0.221 \cdot in^2$$

$$CheckMinTransReinf := \begin{cases} \text{"OK"} & \text{if } A_{fv.cap.min} \le A_{fv.cap} \\ \text{"NO GOOD"} & \text{otherwise} \end{cases} = \text{"OK"}$$

Shear Resistance of GFRP:

$$V_f := \frac{A_{fv.cap} \cdot f_{fv.cap.v} \cdot d_{eff} \cdot \cot(\theta_p)}{S_v} = 18.135 \cdot kip$$

3.5.11 Shear Check

Nominal Shear Resistance:

$$V_n := V_c + V_f = 24.758 \cdot kip$$

Ultimate Shear:

$$V_{u.cap.v} = 12.7 \cdot kip$$

Resistance Factor Shear:

$$\phi_v := 0.75$$

Factored Shear Resistance:

$$V_{r.cap} := \phi_v \cdot V_n = 18.569 \cdot kip$$

Conc. Shear Ratio: $V_{conc.ratio} := \frac{V_{u.cap.v}}{V_{r.cap}} = 0.684$

$$TransReinf_v := \begin{cases} \text{"OK"} & \text{if } V_{u.cap.v} \le V_{r.cap} \\ \text{"Redesign"} & \text{otherwise} \end{cases} = \text{"OK"}$$

$$\boxed{TransReinf_v = \text{"OK"}}$$

3.5.12 Maximum Spacing of Transverse Reinforcement

(AASHTO GFRP 2.7.2.6)

$$MaxTransSpacing := \begin{cases} \min(0.5 \cdot d_{eff}, 24 \cdot in) & \text{if } TransReinf_v = \text{"OK"} \\ \text{"N/A"} & \text{otherwise} \end{cases} = 8.634 \cdot in$$

$$CheckMaxTransSpacing := \begin{cases} \text{"OK"} & \text{if } S_v \le MaxTransSpacing \\ \text{"Redesign"} & \text{otherwise} \end{cases} = \text{"OK"}$$

$$\boxed{CheckMaxTransSpacing = \text{"OK"}}$$

3.6 Vessel Mooring Loads

Utilizing the Marina and Small Craft Harbor manual, the wind design was analyzed with the following criteria:

$$Wind\ Force\ (Fw) = 0.72 \times E \times D \times S \times V^2$$

Where:

- E = Vessel end area, m2 (Fig. 15-2)
- D = Direction Factor (Fig. 15-3)
- S = Shielding Factor (Fig. 15-4)
- V = Air velocity, m/s

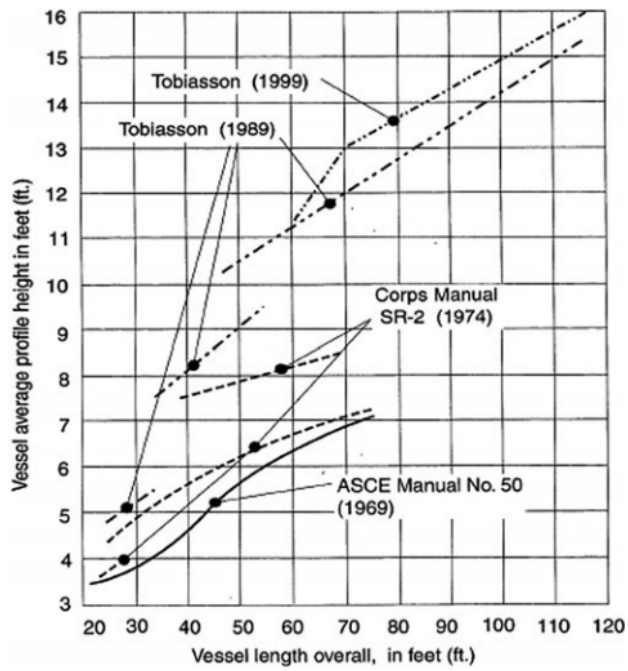

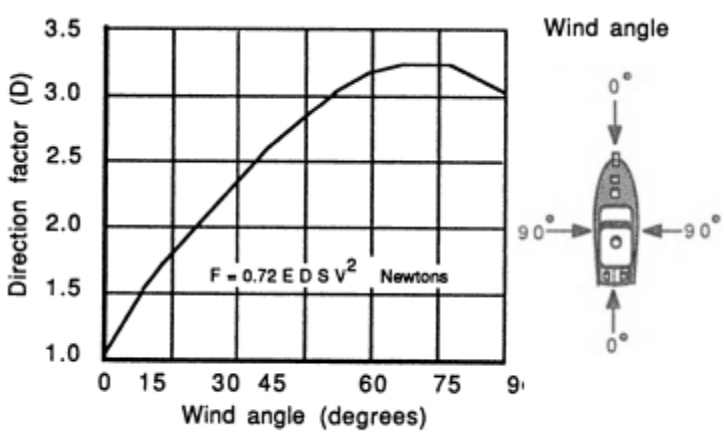

Figure 15-3. Wind direction factors as a function of wind angle.

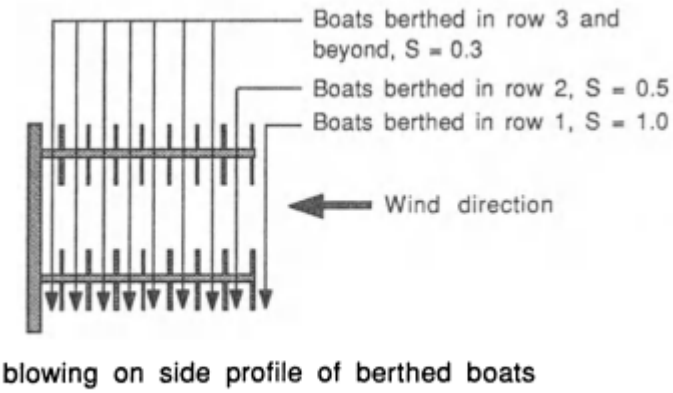

Figure 15-4. Shielding effect of boats based on wind direction.

$$Wind\ Force\ (Fw) = 0.72 \times 0.33(40ft \times 8ft) \times 3.2 \times 1.0 \times 17.88^2 = 7{,}230\ Newtons = 1{,}627\ lbs$$

Proposed concrete dock consists of five (5) total concrete dock piles. Wind force was assumed to be evenly distributed between all (5) concrete dock piles through the dock beam.

$$Lateral\ Load\ per\ Pile\ = \frac{1{,}627\ lbs}{5} = 0.325\ kips$$

3.7 Precast Steel-Reinforced Concrete Dock Pile

3.7.1 AllPile Results

LATERAL ANALYSIS

Figure 2

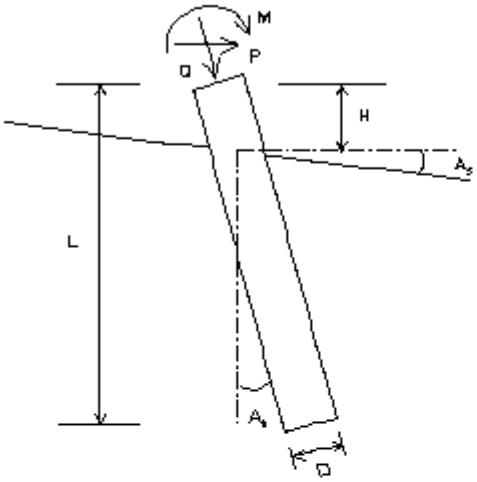

Driving Concrete Pile

Loads:
Load Factor for Vertical Loads= 1.0
Load Factor for Lateral Loads= 1.0
Loads Supported by Pile Cap= 0 %
Shear Condition: Static

(with Load Factor)
Vertical Load, Q= 8.0 -kp
Shear Load, P= 0.3 -kp
Moment, M= 0.0 -kp-f

Profile:
Pile Length, L= 30.0 -ft
Top Height, H= 12.5 -ft
Slope Angle, As= 0
Batter Angle, Ab= 0

Soil Data:

Depth -ft	Gamma -lb/f3	Phi	C -kp/f2	K -lb/i3	e50 or Dr %	Nspt
0	114.9	30.1	0.00	50.8	45.73	15

Pile Data:

Depth -ft	Width -in	Area -in2	Per. -in	I -in4	E -kp/i2	Weight -kp/f
0.0 30.0	14	213.0	56.0	3207.6	4420	0.211

Single Pile Lateral Analysis:
Top Deflection, yt= 0.10400-in
Max. Moment, M= 4.66-kp-f
Top Deflection Slope, St= -0.00065
OK! Top Deflection, 0.1040-in is less than the Allowable Deflection= 2.00-in

Note: If the program cannot find a result or the result exceeds the upper limit. The result will be displayed as 99999.
The Max Moment calculated by program is an internal force from the applied load conditions. Structural engineer has to check whether the pile has enough capacity to resist the moment with adequate factor of safety. If not, the pile may fail under the load conditions.

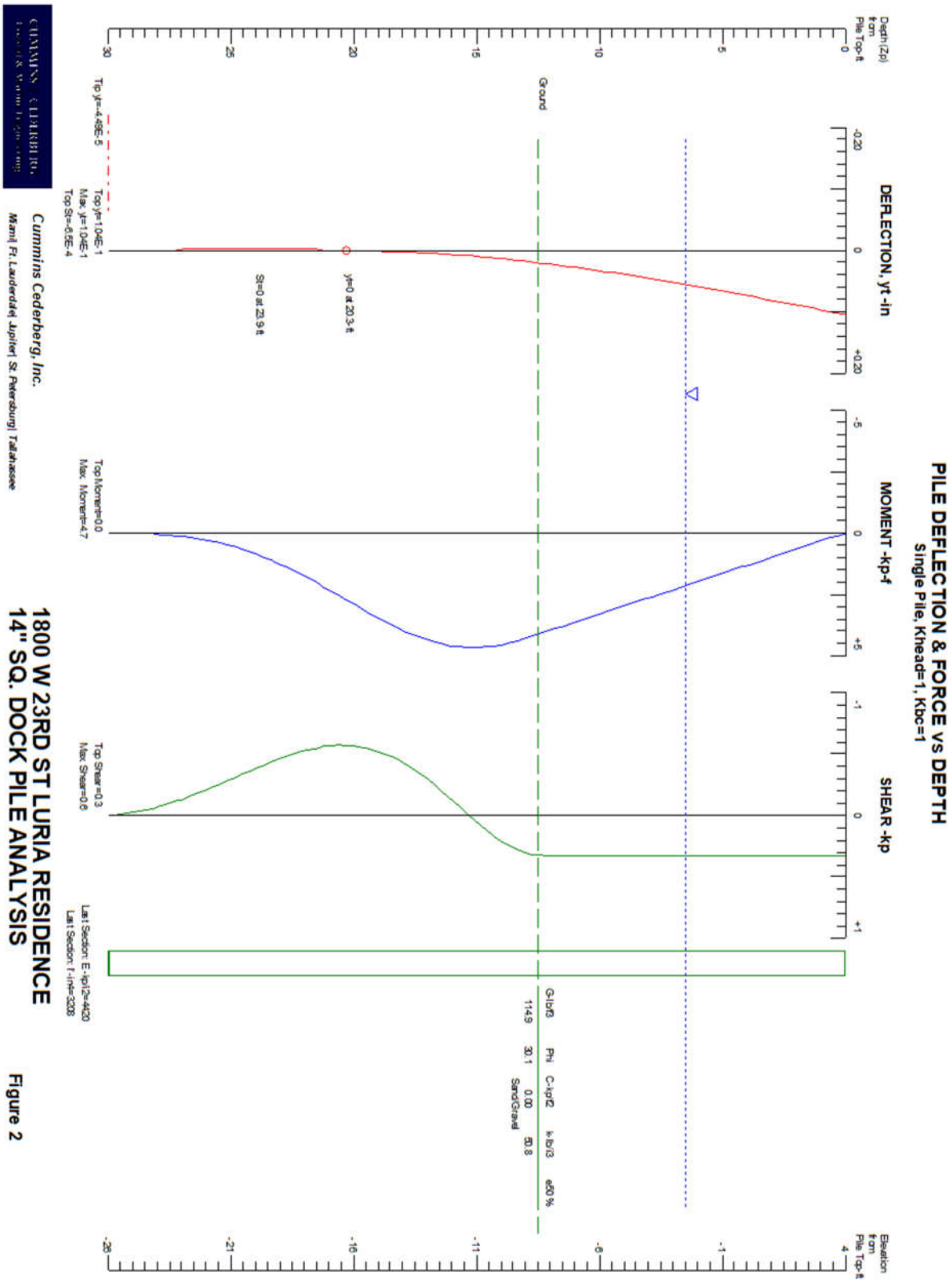

Cummins Cederberg, Inc.
Miami | Ft. Lauderdale | Jupiter | St. Petersburg | Tallahassee

1800 W 23RD ST LURIA RESIDENCE
14" SQ. DOCK PILE ANALYSIS

Figure 2

Depth vs. Deflection, Moment, Shear, and Slope in Single Pile:

****

Zp -ft	yt -in	Moment -kp-f	Shear -kp	Pressure -kp/f2	Slope
0.0	0.104	0.0	0.3	0.0	-0.00065
0.3	0.102	0.1	0.3	0.0	-0.00055
0.6	0.100	0.2	0.3	0.0	-0.00063
0.9	0.097	0.3	0.3	0.0	-0.00066
1.2	0.095	0.4	0.3	0.0	-0.00063
1.5	0.093	0.5	0.3	0.0	-0.00066
1.8	0.090	0.6	0.3	0.0	-0.00063
2.1	0.088	0.7	0.3	0.0	-0.00066
2.4	0.086	0.8	0.3	0.0	-0.00063
2.7	0.083	0.9	0.3	0.0	-0.00063
3.0	0.081	1.0	0.3	0.0	-0.00063
3.3	0.079	1.1	0.3	0.0	-0.00063
3.6	0.076	1.2	0.3	0.0	-0.00063
3.9	0.074	1.3	0.3	0.0	-0.00063
4.2	0.072	1.4	0.3	0.0	-0.00063
4.5	0.070	1.5	0.3	0.0	-0.00060
4.8	0.067	1.6	0.3	0.0	-0.00061
5.2	0.065	1.7	0.3	0.0	-0.00060
5.5	0.063	1.8	0.3	0.0	-0.00061
5.8	0.061	1.9	0.3	0.0	-0.00060
6.1	0.059	2.0	0.3	0.0	-0.00058
6.4	0.056	2.1	0.3	0.0	-0.00061
6.7	0.054	2.2	0.3	0.0	-0.00058
7.0	0.052	2.3	0.3	0.0	-0.00058
7.3	0.050	2.4	0.3	0.0	-0.00055
7.6	0.048	2.5	0.3	0.0	-0.00055
7.9	0.046	2.6	0.3	0.0	-0.00055
8.2	0.044	2.7	0.3	0.0	-0.00055
8.5	0.042	2.8	0.3	0.0	-0.00052
8.8	0.041	2.9	0.3	0.0	-0.00052
9.1	0.039	3.0	0.3	0.0	-0.00052
9.4	0.037	3.1	0.3	0.0	-0.00052
9.7	0.035	3.2	0.3	0.0	-0.00050
10.0	0.033	3.3	0.3	0.0	-0.00047
10.3	0.031	3.4	0.3	0.0	-0.00049
10.6	0.030	3.5	0.3	0.0	-0.00047
10.9	0.028	3.6	0.3	0.0	-0.00044
11.2	0.026	3.7	0.3	0.0	-0.00044
11.5	0.025	3.8	0.3	0.0	-0.00044
11.8	0.023	3.9	0.3	0.0	-0.00044
12.1	0.022	4.0	0.3	0.0	-0.00039
12.4	0.020	4.1	0.3	0.0	-0.00041

Depth vs. Deflection, Moment, Shear, and Slope in Single Pile:

****

Zp -ft	yt -in	Moment -kp-f	Shear -kp	Pressure -kp/f2	Slope
12.7	0.019	4.2	0.3	0.0	-0.00038
13.0	0.018	4.3	0.3	0.0	-0.00036
13.3	0.016	4.4	0.3	0.0	-0.00036
13.6	0.015	4.5	0.3	0.0	-0.00036
13.9	0.014	4.5	0.2	0.0	-0.00033
14.2	0.013	4.6	0.2	0.0	-0.00033
14.5	0.012	4.6	0.1	0.0	-0.00030
14.8	0.011	4.7	0.1	0.0	-0.00028
15.2	0.010	4.7	0.0	0.0	-0.00028
15.5	0.009	4.7	0.0	0.0	-0.00026
15.8	0.008	4.6	-0.1	0.0	-0.00024
16.1	0.007	4.6	-0.1	0.0	-0.00023
16.4	0.006	4.5	-0.2	0.0	-0.00022
16.7	0.005	4.4	-0.2	0.0	-0.00020
17.0	0.005	4.4	-0.3	0.0	-0.00019
17.3	0.004	4.3	-0.3	0.0	-0.00018
17.6	0.003	4.1	-0.4	0.0	-0.00016
17.9	0.003	4.0	-0.4	0.0	-0.00015
18.2	0.002	3.9	-0.5	0.0	-0.00014
18.5	0.002	3.7	-0.5	0.0	-0.00013
18.8	0.002	3.6	-0.5	0.0	-0.00012
19.1	0.001	3.4	-0.5	0.0	-0.00010
19.4	0.001	3.2	-0.5	0.0	-0.00009
19.7	0.000	3.1	-0.6	0.0	-0.00008
20.0	0.000	2.9	-0.6	0.0	-0.00007
20.3	0.000	2.7	-0.6	0.0	-0.00007
20.6	0.000	2.5	-0.6	0.0	-0.00006
20.9	0.000	2.4	-0.6	0.0	-0.00005
21.2	-0.001	2.2	-0.6	0.0	-0.00004
21.5	-0.001	2.0	-0.6	0.0	-0.00004
21.8	-0.001	1.9	-0.5	0.0	-0.00003
22.1	-0.001	1.7	-0.5	0.0	-0.00002
22.4	-0.001	1.5	-0.5	0.0	-0.00002
22.7	-0.001	1.4	-0.5	0.0	-0.00001
23.0	-0.001	1.3	-0.5	0.0	-0.00001
23.3	-0.001	1.1	-0.4	0.0	-0.00001
23.6	-0.001	1.0	-0.4	0.0	0.00000
23.9	-0.001	0.9	-0.4	0.0	0.00000
24.2	-0.001	0.8	-0.4	0.0	0.00001

Depth vs. Deflection, Moment, Shear, and Slope in Single Pile:

****

Zp -ft	yt -in	Moment -kp-f	Shear -kp	Pressure -kp/f2	Slope
24.5	-0.001	0.7	-0.3	0.0	0.00001
24.8	-0.001	0.6	-0.3	0.0	0.00001
25.2	-0.001	0.5	-0.3	0.0	0.00001
25.5	-0.001	0.4	-0.3	0.0	0.00001
25.8	-0.001	0.3	-0.2	0.0	0.00001
26.1	-0.001	0.3	-0.2	0.0	0.00001
26.4	-0.001	0.2	-0.2	0.0	0.00001
26.7	-0.001	0.2	-0.2	0.0	0.00002
27.0	-0.001	0.1	-0.1	0.0	0.00002
27.3	-0.001	0.1	-0.1	0.0	0.00002
27.6	-0.001	0.1	-0.1	0.0	0.00002
27.9	0.000	0.1	-0.1	0.0	0.00002
28.2	0.000	0.0	-0.1	0.0	0.00002
28.5	0.000	0.0	0.0	0.0	0.00002
28.8	0.000	0.0	0.0	0.0	0.00002
29.1	0.000	0.0	0.0	0.0	0.00002
29.4	0.000	0.0	0.0	0.0	0.00002
29.7	0.000	0.0	0.0	0.0	0.00002
30.0	0.000	0.0	0.0	0.0	0.00002

4 TIMBER FENDER PILE ANALYSIS

4.1 Vessel Loading

Utilizing the Marina and Small Craft Harbor manual, the wind design was analyzed with the following criteria:

$$Wind\ Force\ (Fw) = 0.72 \times 0.33(40ft \times 8ft) \times 3.2 \times 1.0 \times 17.88^2 = 7{,}230\ Newtons = 1{,}627\ lbs$$

Proposed (3) 12" diameter timber fender piles along the dock. Load force was assumed to be evenly distributed between all fender piles.

$$Lateral\ Load\ per\ Pile\ = \frac{1{,}627\ lbs}{3} = 0.542\ kips$$

4.2 Timber Pile

4.2.1 AllPile Results

LATERAL ANALYSIS

Figure 2

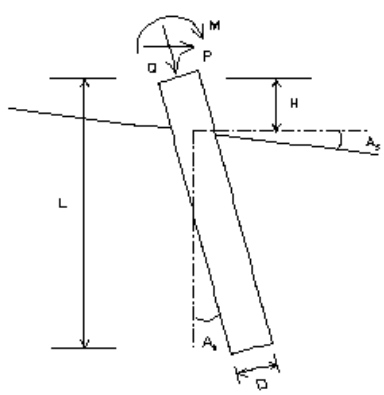

Driving Tapered Pile (Timber Pile)

Loads:
Load Factor for Vertical Loads= 1.0
Load Factor for Lateral Loads= 1.0
Loads Supported by Pile Cap= 0 %
Shear Condition: Static

(with Load Factor)
Vertical Load, Q= 0.0 -kp
Shear Load, P= 0.5 -kp
Moment, M= 0.0 -kp-f

Profile:
Pile Length, L= 25.0 -ft
Top Height, H= 12.5 -ft
Slope Angle, As= 0
Batter Angle, Ab= 0

Soil Data:

Depth -ft	Gamma -lb/f3	Phi	C -kp/f2	K -lb/i3	e50 or Dr %	Nspt
0	56.8	35.1	0.00	50.8	45.73	15

Pile Data:

Depth -ft	Width -in	Area -in2	Per. -in	I -in4	E -kp/i2	Weight -kp/f
0.0 25.0	12	113.1	37.7	1017.9	1500	0.039

Single Pile Lateral Analysis:
Top Deflection, yt= 1.06000-in
Max Moment, M= 7.36-kp-f
Top Deflection Slope, St= -0.00762
OK! Top Deflection, 1.0600-in is less than the Allowable Deflection= 2.00-in

Note: If the program cannot find a result or the result exceeds the upper limit. The result will be displayed as 99999.
The Max Moment calculated by program is an internal force from the applied load conditions. Structural engineer has to check whether the pile has enough capacity to resist the moment with adequate factor of safety. If not, the pile may fail under the load conditions.

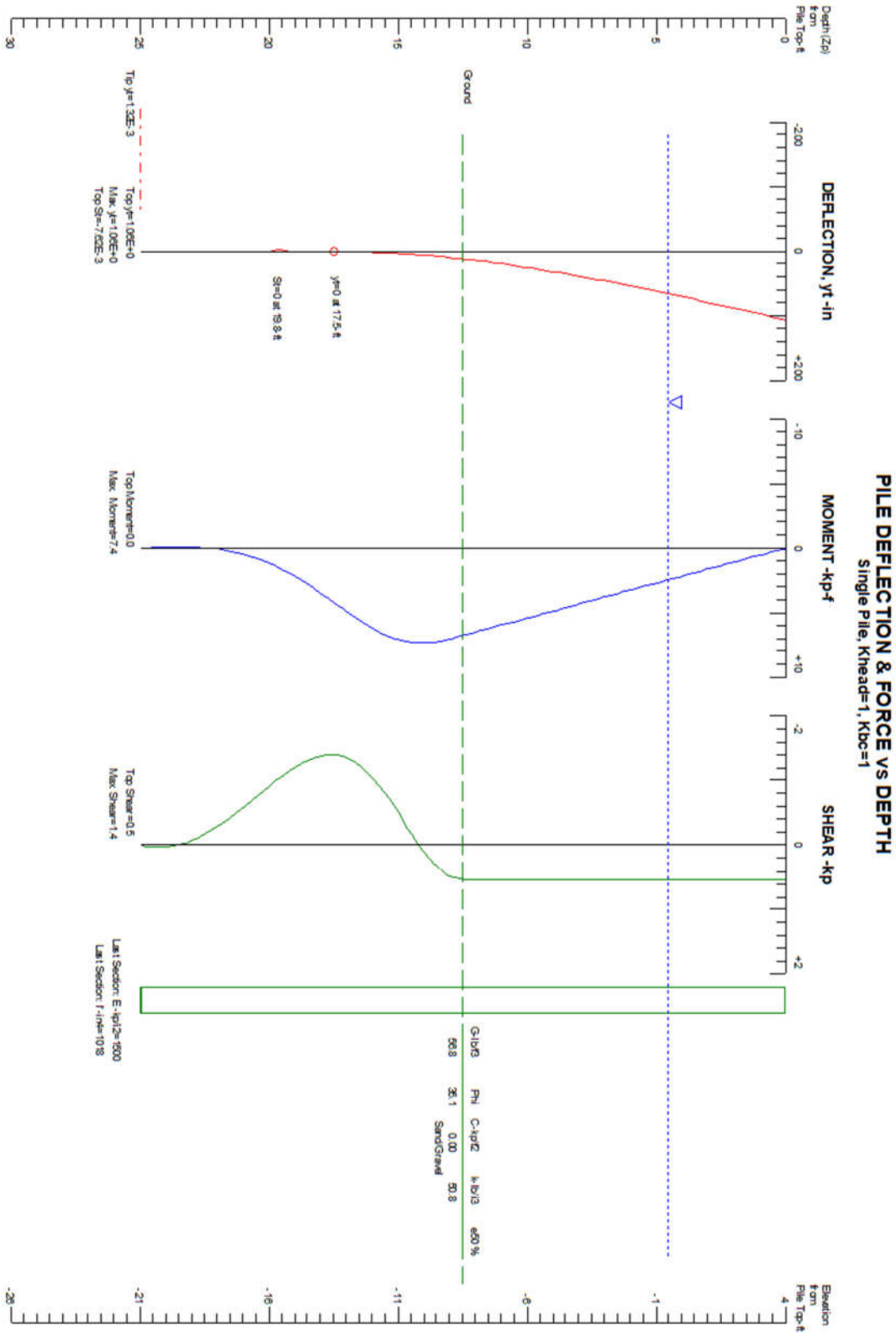

Cummins Cederberg, Inc.
Miami| Ft. Lauderdale| Jupiter| St. Petersburg| Tallahassee

1800 W 23RD ST LURIA RESIDENCE
12" TIMBER FENDER PILE ANALYSIS

Figure 2

Depth vs. Deflection, Moment, Shear, and Slope in Single Pile:

****

Zp -ft	yt -in	Moment -kp-f	Shear -kp	Pressure -kp/f2	Slope
0.0	1.060	0.0	0.5	0.0	-0.00762
0.3	1.040	0.1	0.5	0.0	-0.00660
0.5	1.020	0.3	0.5	0.0	-0.00660
0.8	0.993	0.4	0.5	0.0	-0.00891
1.0	0.970	0.5	0.5	0.0	-0.00759
1.3	0.947	0.7	0.5	0.0	-0.00759
1.5	0.924	0.8	0.5	0.0	-0.00759
1.8	0.901	1.0	0.5	0.0	-0.00759
2.0	0.878	1.1	0.5	0.0	-0.00759
2.3	0.856	1.2	0.5	0.0	-0.00726
2.5	0.833	1.4	0.5	0.0	-0.00759
2.8	0.810	1.5	0.5	0.0	-0.00759
3.0	0.788	1.6	0.5	0.0	-0.00726
3.3	0.766	1.8	0.5	0.0	-0.00726
3.5	0.743	1.9	0.5	0.0	-0.00759
3.8	0.721	2.0	0.5	0.0	-0.00726
4.0	0.700	2.2	0.5	0.0	-0.00693
4.3	0.678	2.3	0.5	0.0	-0.00724
4.5	0.656	2.5	0.5	0.0	-0.00726
4.8	0.635	2.6	0.5	0.0	-0.00693
5.1	0.614	2.7	0.5	0.0	-0.00693
5.3	0.593	2.9	0.5	0.0	-0.00693
5.6	0.572	3.0	0.5	0.0	-0.00693
5.8	0.551	3.2	0.5	0.0	-0.00693
6.1	0.531	3.3	0.5	0.0	-0.00660
6.3	0.511	3.4	0.5	0.0	-0.00660
6.6	0.491	3.6	0.5	0.0	-0.00660
6.8	0.471	3.7	0.5	0.0	-0.00660
7.1	0.452	3.8	0.5	0.0	-0.00627
7.3	0.433	4.0	0.5	0.0	-0.00627
7.6	0.414	4.1	0.5	0.0	-0.00627
7.8	0.395	4.2	0.5	0.0	-0.00627
8.1	0.377	4.4	0.5	0.0	-0.00594
8.3	0.359	4.5	0.5	0.0	-0.00594
8.6	0.342	4.7	0.5	0.0	-0.00561
8.8	0.325	4.8	0.5	0.0	-0.00561
9.1	0.308	4.9	0.5	0.0	-0.00561
9.3	0.291	5.1	0.5	0.0	-0.00561
9.6	0.275	5.2	0.5	0.0	-0.00528
9.8	0.259	5.3	0.5	0.0	-0.00528
10.1	0.244	5.5	0.5	0.0	-0.00495
10.4	0.229	5.6	0.5	0.0	-0.00495

Depth vs. Deflection, Moment, Shear, and Slope in Single Pile:
****

Zp -ft	yt -in	Moment -kp-f	Shear -kp	Pressure -kp/f2	Slope
14.4	0.051	7.3	-0.1	-0.2	-0.00244
14.6	0.044	7.3	-0.3	-0.2	-0.00224
14.9	0.038	7.2	-0.4	-0.2	-0.00208
15.2	0.032	7.0	-0.6	-0.2	-0.00191
15.4	0.027	6.8	-0.7	-0.1	-0.00175
15.7	0.022	6.6	-0.9	-0.1	-0.00158
15.9	0.017	6.3	-1.0	-0.1	-0.00145
16.2	0.014	6.0	-1.1	-0.1	-0.00125
16.4	0.010	5.7	-1.2	-0.1	-0.00116
16.7	0.007	5.4	-1.3	-0.1	-0.00099
16.9	0.004	5.0	-1.3	0.0	-0.00087
17.2	0.002	4.7	-1.4	0.0	-0.00075
17.4	0.000	4.3	-1.4	0.0	-0.00064
17.7	-0.001	3.9	-1.4	0.0	-0.00054
17.9	-0.003	3.6	-1.4	0.0	-0.00045
18.2	-0.004	3.2	-1.4	0.0	-0.00036
18.4	-0.005	2.9	-1.3	0.0	-0.00028
18.7	-0.005	2.6	-1.3	0.1	-0.00021
18.9	-0.006	2.3	-1.2	0.1	-0.00015
19.2	-0.006	2.0	-1.2	0.1	-0.00010
19.4	-0.006	1.7	-1.1	0.1	-0.00005
19.7	-0.006	1.4	-1.0	0.1	-0.00001
19.9	-0.006	1.2	-0.9	0.1	0.00002
20.2	-0.006	1.0	-0.8	0.1	0.00005
20.5	-0.006	0.8	-0.8	0.1	0.00008
20.7	-0.006	0.6	-0.7	0.1	0.00009
21.0	-0.005	0.5	-0.6	0.1	0.00011
21.2	-0.005	0.4	-0.5	0.1	0.00012
21.5	-0.004	0.2	-0.4	0.1	0.00013
21.7	-0.004	0.2	-0.4	0.1	0.00014
22.0	-0.004	0.1	-0.3	0.1	0.00014
22.2	-0.003	0.0	-0.2	0.1	0.00014
22.5	-0.003	0.0	-0.2	0.1	0.00014
22.7	-0.002	0.0	-0.1	0.0	0.00014
23.0	-0.002	-0.1	-0.1	0.0	0.00014
23.2	-0.002	-0.1	0.0	0.0	0.00014
23.5	-0.001	-0.1	0.0	0.0	0.00014
23.7	-0.001	0.0	0.0	0.0	0.00014
24.0	0.000	0.0	0.0	0.0	0.00013
24.2	0.000	0.0	0.0	0.0	0.00013

Depth vs. Deflection, Moment, Shear, and Slope in Single Pile:

****

Zp -ft	yt -in	Moment -kp-f	Shear -kp	Pressure -kp/f2	Slope
24.5	0.001	0.0	0.0	0.0	0.00013
24.7	0.001	0.0	0.0	0.0	0.00013
25.0	0.001	0.0	0.0	0.0	0.00013

Zp - Depth from pile Top
yt - Pile top deflection
Moment - Internal moment in pile shaft
Shear - Internal shear force in pile shaft
Pressure - Soil-Pile interactive pressure (Arching is considered)
Slope - Deflection slope at pile top

5 14" SQ. P.S. PILE CAPACITIES

Per FDOT P.S. pile interaction diagram, 14" p.s. seawall & dock piles are satisfactory.

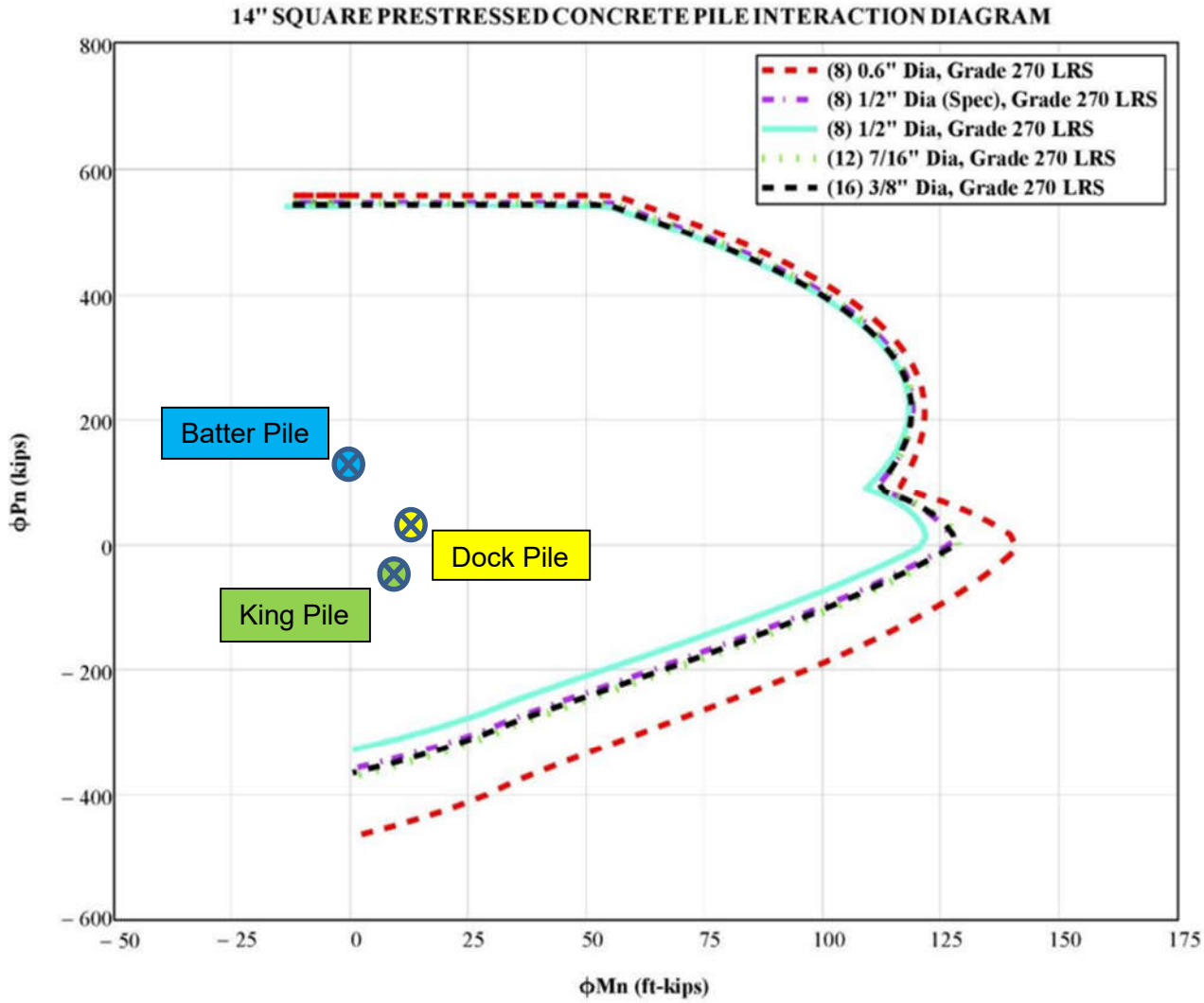

Design Assumptions:

- Concrete compressive strength $f'_c = 6$ ksi.
- Modulus of elasticity of prestressing strands, $E_p = 28{,}500$ ksi.
- Resistance factor for axial, $\phi_{axial} = 0.75$ & for flexure, $\phi_{flexure} = 1.0$.
- All piles assumed to have spiral ties.
- Strand sizes and strand patterns used to create interaction curves correspond with those indicated in Index 455-014.