1800 W 23RD STREET
SEAWALL & DOCK REPLACEMENT PROJECT

1800 W 23RD STREET
MIAMI BEACH, FL

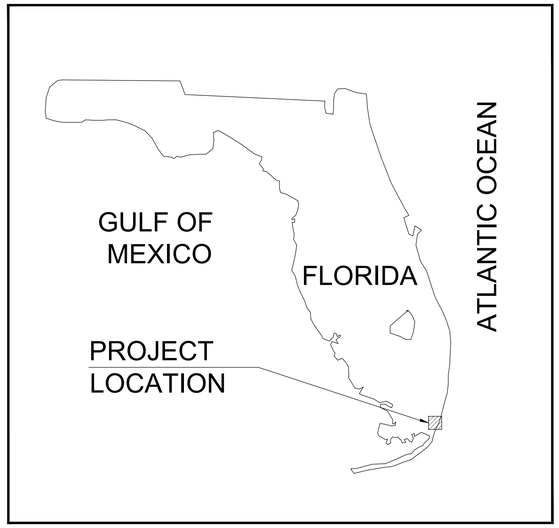

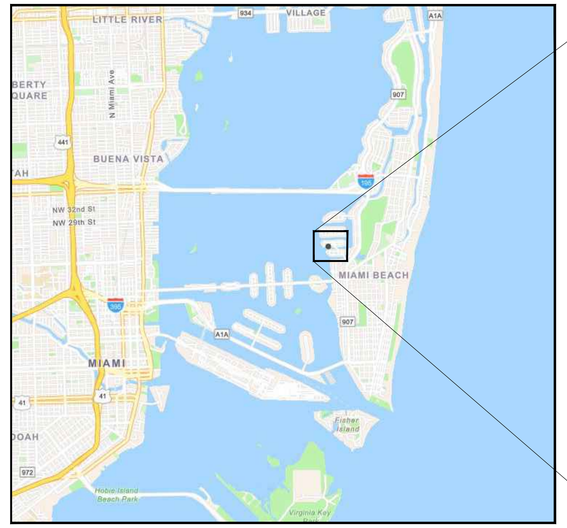

PROJECT LOCATION

SHEET INDEX	
SHEET NUMBER	TITLE
CM-1.0	COVER SHEET
CM-1.1	GENERAL NOTES
CM-1.2	EXISTING CONDITIONS & DEMOLITION PLAN
CM-2.0	PROPOSED SITE PLAN
CM-2.1	PROPOSED SEAWALL PLAN
CM-2.2	BULKHEAD SECTIONS
CM-2.3	BULKHEAD SECTIONS
CM-2.4	SECTIONS & DETAILS

CLIENT:

MR. PETER LURIA
1800 WEST 23rd STREET
MIAMI BEACH, FL 33140

ENGINEER:

CUMMINS | CEDERBERG
Coastal & Marine Engineering
Miami | Fort Lauderdale | Jupiter
Tallahassee | St. Petersburg
201 ALHAMBRA CIRCLE, SUITE 601
CORAL GABLES, FL 33134
T: +1 305-741-6155 F: +1 305-974-1969
www.cumminscederberg.com

811
KNOW WHAT'S BELOW
ALWAYS CALL 811
BEFORE YOU DIG
It's fast. It's free. It's the law.
www.callsunshine.com

REVISION:	DATE:	NOTE:

COVER

SHEET 1 OF 8

CM-1.0

J:\Projects\71900-1800 W 23rd Street (Luria)\Drawing\Working\(2022-12-8) 71900_1800_W_23RD.dwg

1. GENERAL

1.1. THE WORK CONSISTS OF PROVIDING ALL CONSTRUCTION, LABOR, EQUIPMENT, MATERIAL AND OPERATIONS IN CONNECTION WITH THE REPAIR OF THE SEAWALL AND RELATED IMPROVEMENTS AS SHOWN ON THESE DRAWINGS.
1.2. ANY DISCREPANCIES IN THE PLANS WITH THE FIELD CONDITIONS SHALL BE BROUGHT TO THE IMMEDIATE ATTENTION OF THE ENGINEER. CONSTRUCTION SHALL NOT CONTINUE UNTIL THE ENGINEER HAS ADDRESSED THE DISCREPANCIES.
1.3. THE CONTRACTOR SHALL TAKE ALL NECESSARY PRECAUTIONS TO PROTECT EXISTING STRUCTURES IN THE PROJECT VICINITY. ANY DAMAGE TO PRIVATE OR PUBLIC PROPERTY WITHIN THE PROJECT VICINITY, INCLUDING STAGING SITES, WORK AND ACCESS AREAS SHALL BE REPAIRED PROMPTLY BY THE CONTRACTOR. ANY DAMAGE AS A RESULT OF THE CONTRACTOR'S OPERATIONS SHALL BE REPAIRED AT NO COST TO THE OWNER. ALL ACCESS AND STAGING AREAS SHALL BE KEPT NEAT, ORDERLY AND IN A SAFE MANNER. ALL ACCESS AND STAGING AREAS SHALL BE RESTORED TO THE PRE-CONSTRUCTION CONDITION UPON PROJECT COMPLETION AT THE COST OF THE CONTRACTOR. THE SITE SHALL BE RESTORED BY REMOVING AND FINISHING ALL EVIDENCE FOR CONSTRUCTION. IN THE EVENT INFRASTRUCTURE (SUCH AS WALKWAYS, SIDEWALKS, FENCES, VEGETATION, ETC.) IS TEMPORARILY REMOVED OR RELOCATED OR THERE IS UNAUTHORIZED DAMAGE TO VEGETATION AND/OR FACILITIES BY THE CONTRACTOR, THE CONTRACTOR SHALL RESTORE ALL DAMAGE TO STRUCTURES AND NATURAL FEATURES TO PRE-CONSTRUCTION CONDITIONS OR BETTER.
1.4. UTILITIES ARE NOT SHOWN IN THE PLANS. CONTRACTOR IS RESPONSIBLE FOR LOCATING ALL PRESENT UTILITIES PRIOR TO CONSTRUCTION.
1.5. CONTRACTOR IS RESPONSIBLE FOR PROVIDING PROPER CLEARANCE AND PROTECTION TO ALL OVERHEAD WIRES AND OBSTRUCTIONS.
1.6. THE CONTRACTOR SHALL EXCLUDE THE PUBLIC FROM THE WORK AREAS IN THE IMMEDIATE VICINITY OF OPERATIONS. CONTRACTOR SHALL PROVIDE APPROPRIATE SAFETY MEASURES TO PROTECT THE PUBLIC.
1.7. ALL NEW STRUCTURAL WORK INCLUDING CONCRETE AND REINFORCEMENT SHALL BE ACCURATELY FIELD MEASURED AND DIMENSIONS VERIFIED BY THE CONTRACTOR PRIOR TO ORDERING MATERIALS. CONTRACTOR SHALL BE PREPARED TO MAKE FIELD ADJUSTMENTS TO ACCURATELY FIT THE NEW WORK TO EXISTING CONDITIONS.
1.8. NO CONSTRUCTION SHALL COMMENCE UNTIL ALL REQUIRED PERMITS AND APPROVALS HAVE BEEN SECURED AND THE CONTRACTOR HAS BEEN ISSUED NOTICE TO PROCEED.
1.9. ATTENTION IS DIRECTED TO THE FACT THAT THESE PLANS MAY HAVE BEEN CHANGED IN SIZE BY REPRODUCTION. THIS SHOULD BE CONSIDERED WHEN OBTAINING SCALED DATA.
1.10. CONSTRUCTION WORK SHALL BE EXECUTED IN ACCORDANCE WITH ALL LOCAL, STATE, AND NATIONAL BUILDING CODES AND GOVERNING REGULATIONS.FDEP, USACE, AND MIAMI-DADE COUNTY. CONTRACTOR SHALL ADHERE TO ALL CONDITIONS OF THE PERMITS AND EXEMPTIONS.

2. LAYOUT AND TESTING

2.1. ALL CONSTRUCTION STAKEOUT SHALL BE PERFORMED BY AND PAID FOR BY THE CONTRACTOR UNDER THE SUPERVISION OF A SURVEYOR REGISTERED IN THE STATE OF FLORIDA.
2.2. ALL TESTING AND INSPECTION FOR CONCRETE MATERIALS SHALL BE IN ACCORDANCE WITH FDOT SPECIFICATIONS AND SHALL BE PERFORMED BY AN INDEPENDENT TESTING LABORATORY.

3. DEMOLITION

3.1. CONTRACTOR SHALL VERIFY THE EXTENTS, LOCATION AND QUANTITIES OF EXISTING ELEMENTS TO BE REMOVED.
3.2. ALL DEBRIS WITHIN THE LIMITS OF THE PROJECT SITE SHALL HAULED OFF SITE BY THE CONTRACTOR, AS DIRECTED BY THE OWNER, AND DISPOSED OF AT AN APPROPRIATE FACILITY.
3.3. CONTRACTOR SHALL NOT DAMAGE ANY STRUCTURAL COMPONENTS BEYOND THE DEMOLITION REQUIREMENTS DEPICTED IN THESE DRAWINGS. ANY DAMAGE SHALL BE REPAIRED AT THE CONTRACTOR'S EXPENSE.
3.4. ALL MATERIAL DISCARDED INTO THE WATER SHALL BE IMMEDIATELY REMOVED BY THE CONTRACTOR.

4. SURVEY

4.1. BOUNDARY AND TOPOGRAPHICAL SURVEY BY ECS LAND SURVEYORS, INC. DATED 10/29/2019.

5. DESIGN CODES & STANDARDS

5.1. FBC 2020
5.2. ACI 440-1R-15
5.3. AASHTO LFRD BRIDGE DESIGN GUIDE SPECIFICATIONS FOR GFRP - REINFORCED CONCRETE 2018
5.4. ACI 318-19
5.5. FDOT STANDARD SPECIFICATIONS FOR ROAD & BRIDGE CONSTRUCTION

6. DESIGN LOADS
- BULKHEAD SURCHARGE LL= 100 PSF
- VESSEL LENGTH, LOA= 40 FT
- OCCUPIED WIND Vasd: 40 MPH SUSTAINED

7. CONCRETE

7.1. FORMS FOR THIS WORK SHALL BE MADE OF EITHER WOOD OR METAL. THEY SHALL BE STRAIGHT AND FREE OF WARP OR BENDS. THEY SHALL HAVE SUFFICIENT STRENGTH AND RIGIDITY, WHEN STAKED, TO RESIST THE PRESSURE OF THE CONCRETE WITHOUT SPRINGING. IF WOODEN FORMS ARE USED, THEY SHALL BE OF ADEQUATE SECTION AND SHALL HAVE A FLAT SURFACE ON TOP. FORMS SHALL HAVE A DEPTH AT LEAST EQUAL TO THE VERTICAL DIMENSIONS FOR THE DEPTH OF THE CONCRETE BEING DEPOSITED AGAINST THEM. WHEN READY FOR THE CONCRETE TO BE DEPOSITED, THEY SHALL NOT VARY FROM THE APPROVED LINE AND GRADE, AND SHALL BE KEPT SO UNTIL THE CONCRETE HAS SET.
7.2. JUST PRIOR TO PLACING THE CONCRETE ANY WOODEN FORMS SHALL BE MOISTENED AND ALL STEEL REINFORCING SHALL BE RINSED WITH FRESH WATER. THE CONCRETE SHALL BE PLACED IN THE FORMS AND TAMPED IN PLACE SO THAT ALL HONEYCOMBS WILL BE ELIMINATED AND SUFFICIENT MORTAR BROUGHT TO A SMOOTH EVEN FINISH BY MEANS OF A FLOAT.
7.3. CONTRACTOR SHALL BE PREPARED TO PLACE CONCRETE OF LOWER MEMBERS OF THE MARINE STRUCTURES IN SUBMERGED CONDITIONS UTILIZING TREMIE METHODS AT NO ADDITIONAL COST.
7.4. NO CONCRETE SHALL BE POURED DURING UNFAVORABLE WEATHER OR SEA CONDITIONS.
7.5. CAST-IN-PLACE CONCRETE SHALL BE A MINIMUM OF 5,000 PSI COMPRESSIVE STRENGTH AT 28 DAYS. WATER CEMENT RATIO (W/C) SHALL BE LESS THAN OR EQUAL TO 0.4. PROVIDE MIX DESIGN FOR A CLASS IV CONCRETE FOR AN EXTREMELY AGGRESSIVE (MARINE) ENVIRONMENT IN ACCORDANCE WITH FDOT SPECIFICATIONS. CONTRACTOR SHALL PROVIDE MIX DESIGN TO ENGINEER FOR APPROVAL 10 DAYS PRIOR TO CONCRETE PLACEMENT.
7.6. NO WATER SHALL BE ADDED TO CONCRETE AT THE JOB SITE UNLESS AUTHORIZED BY THE ENGINEER OR SPECIAL INSPECTOR.
7.7. WHEN SURFACE FINISHING IS COMPLETED, THE STRUCTURE SHALL BE PROTECTED AGAINST WAVE SPLASH FOR TWO DAYS AND CURED PER APPLICABLE PARAGRAPHS OF SECTION 400-16 OF THE FDOT STANDARD SPECIFICATIONS. CURING SHALL OCCUR FOR AT LEAST 7 DAYS.
7.8. APPLY SIKA ARMATEC 110 BONDING AGENT, OR APPROVED EQUAL, AT CONSTRUCTION JOINTS PRIOR TO PLACEMENT OF NEW CONCRETE.
7.9. COMPONENTS NOT CONSTRUCTED ACCORDING TO THESE SPECIFICATIONS SHALL BE REMOVED AND REPLACED PROPERLY AT THE EXPENSE OF THE CONTRACTOR.
7.10. THE FACES OF THE FINISHED STRUCTURES SHALL BE TRUE, STRAIGHT, AND OF UNIFORM WIDTH, FREE FROM HUMPS, SAGS, OR OTHER IRREGULARITIES EXCEPT AS SPECIFIED IN THE PLANS. THE CONTRACTOR SHALL REPLACE ANY DEFICIENT SEGMENTS.
7.11. CONCRETE FORMWORKERS AND FINISHERS:
THE CONTRACTOR SHALL SUPPLY A SUFFICIENT NUMBER OF EXPERIENCED CONCRETE FORMWORKERS AND FINISHERS IN ORDER TO COMPLETE THE WORK. A CONCRETE FOREMAN WHO HAS A THOROUGH UNDERSTANDING OF THE PLANS, SPECIFICATIONS, AND REFERENCED SPECIFICATIONS SHALL SUPERVISE ALL FORMWORKERS AND FINISHERS. NO SUB-STANDARD WORKMANSHIP WILL BE ACCEPTED.
7.12. CONCRETE TRANSPORTATION:
CONCRETE DELIVERED FROM A READY MIX PLANT SHALL BE TRANSPORTED IN ACCORDANCE TO FDOT SECTION 345-13. CONCRETE THAT IS NOT PLACED IN THE FORM WITHIN THE SPECIFIED TIME LIMITS WILL BE REJECTED AND NOT INCLUDED IN THE WORK. CONTRACTOR SHALL BEAR ALL COSTS FOR REJECTED CONCRETE. CONCRETE SHALL NOT BE PLACED IN THE FORMS UNTIL THE REINFORCING STEEL PLACEMENT HAS BEEN APPROVED BY THE ENGINEER.
7.13. REINFORCED CONCRETE MATERIALS TESTING:
THE CONTRACTOR SHALL HAVE AN INDEPENDENT TESTING LABORATORY TEST THE CONCRETE USED IN THE WORK. THE TEST SHALL INCLUDE 7, 14, AND 28 DAY COMPRESSIVE STRENGTH TESTS. THE RESULTS SHALL BE SUPPLIED TO THE ENGINEER. THE TESTS SHALL BE IN ACCORDANCE WITH ASTM C31, C39, AND C617.
7.14. ADHESIVE BONDED DOWELS SHALL BE INSTALLED IN ACCORDANCE WITH FDOT SECTION 416.

8. PRECAST PILING

8.1. 14" SQUARE PRESTRESSED CONCRETE PILES SHALL BE WITH EIGHT (8) 0.6" DIAMETER STRANDS, GRADE 270 L.R.S.
8.2. PILES MAY BE PRE-PUNCHED BUT SHALL BE DRIVEN TO FINAL TIP ELEVATION.
8.3. CONCRETE TO BE MINIMUM 6,000 PSI, AND FOLLOW FDOT CLASS-V CONCRETE SPECIFICATIONS. MINIMUM COVER TO INTERNAL REINFORCEMENT SHALL BE 3" ON ALL SIDES.
8.4. PILES SHALL BE DRIVEN TO THE TIP ELEVATION SHOWN IN THE DRAWINGS. NOTIFY ENGINEER IF PRACTICAL REFUSAL IS ENCOUNTERED PRIOR.
8.5. INDICATOR PILE LOG(S) SHALL BE SUBMITTED TO EOR FOR CONFIRMATION OF PRODUCTION PILE LENGTH AND MINIMUM BEARING CAPACITY.
8.6. 14" SQUARE PRESTRESSED CONCRETE PILES SHALL PROVIDE A MINIMUM BEARING CAPACITY OF 40 TONS/PILE.
8.7. PILE LOGS SHALL BE RECORDED FOR ALL DRIVEN PILES.
8.8. PILES SHALL BE CUT OFF AS SHOWN ON THE PLANS AND SECTIONS HEREIN ONLY AFTER ENGINEER'S APPROVAL.
8.9. CONTRACTOR TO SUBMIT SHOP DRAWINGS FOR CONCRETE PILES.

9. FIBER REINFORCED POLYMER (FRP) REINFORCEMENT

9.1. GLASS FIBER REINFORCED POLYMER (GFRP) PER FDOT SPECIFICATIONS, SECTIONS 932-3, APPLICABLE TO PRECAST CONCRETE PANEL AND ALL CIP COMPONENTS EXCEPT PILING.
9.2. GLASS FIBER REINFORCED POLYMER SHALL BE NEW AND ROUND CONFORMING TO ASTM D7957 AND MEET MINIMUM TENSILE MODULUS OF ELASTICITY OF 8700 KSI.

10.TIMBER PILING

10.1. ALL TIMBER PILES TO BE SOUTHERN YELLOW PINE (SYP) AND COMPLY WITH ASTM D25-79 AND BE PRESSURE TREATED W/ CCA FEDERAL SPECS TT-W-550D(1) OR TT-W-00550E(1) AND AWFA-P-4.
10.2. TIMBER PILES SHALL HAVE A MINIMUM DIAMETER OF 12 INCHES, 3 FT. FR BUTT.
10.3. PILE LOGS SHALL BE RECORDED FOR ALL DRIVEN PILES.
10.4. TIMBER PILES TO PROVIDE A MINIMUM BEARING CAPACITY OF 10 TONS/PILE.
10.5. PILES SHALL BE CUT OFF AT ELEVATIONS SHOWN IN THE PLANS AND SECTIONS HEREIN ONLY AFTER ENGINEER'S APPROVAL.
10.6. PILES MAY BE PRE-PUNCHED, BUT MUST ULTIMATELY BE DRIVEN TO DESIGN TIP ELEVATIONS TO VERIFY CAPACITY. PILES SHALL BE DRIVEN WITH DROP OR IMPACT HAMMER .
10.7. PILES SHALL BE DRIVEN TO A MINIMUM OF 12 FEET INTO FIRM MATERIAL OR TO THE TIP ELEVATION SHOWN IN THE DRAWINGS, WHICHEVER IS DEEPER. NOTIFY ENGINEER IF PRACTICAL REFUSAL IS ENCOUNTERED PRIOR.

11.TIDAL DATA

11.1. CONTRACTOR MAY NEED TO ADJUST HIS WORK PLAN TO ACCOUNT FOR ACTUAL WATER LEVELS AND CHANGING WATER LEVELS. THE SITE MAY BE SUBJECT TO VARIABLE WAVE AND SURGE CONDITIONS AND IT IS THE RESPONSIBILITY OF THE CONTRACTOR TO PROVIDE TEMPORARY SUPPORT FOR MARINE STRUCTURES AND SHORELINE DURING CONSTRUCTION. TIDAL DATA OBTAINED FROM MIAMI BEACH, FLORIDA STATION ID 8723170.

12.TURBIDITY CONTROL

12.1. TURBIDITY BARRIERS SHALL BE AS REQUIRED BY PERMITS. IF REQUIRED, TURBIDITY BARRIERS SHALL REMAIN IN PLACE UNTIL TURBIDITY LEVELS FALL WITHIN STATE AND COUNTY STANDARDS ABOVE BACKGROUND.

13.SUBMITTALS

13.1. REVIEW OF SUBMITTALS BY THE STRUCTURAL ENGINEER IS FOR GENERAL CONFORMANCE WITH THE DESIGN CONCEPT AS PRESENTED BY THE CONTRACT DOCUMENTS. NO DETAILED CHECK OF QUANTITIES OR DIMENSIONS WILL BE MADE.
13.2. ALL SHOP DRAWINGS MUST BEAR EVIDENCE OF THE CONTRACTOR'S APPROVAL PRIOR TO SUBMITTING TO EOR.
13.3. THE FOLLOWING MINIMUM SUBMITTALS SHALL BE PREPARED BY THE CONTRACTOR AND SUBMITTED TO THE ENGINEER FOR REVIEW AND APPROVAL PRIOR TO RELATED CONSTRUCTION ACTIVITY:

13.3.1. SCHEDULE FOR COMPLETION OF WORK WITH TASKS AND DURATIONS DEFINED
13.3.2. CONCRETE MIX
13.3.3. REINFORCING
13.3.4. MARINE HARDWARE
13.3.5. TIMBER PILING
13.3.6. CONCRETE PILING

ABBREVIATIONS

ACI	AMERICAN CONCRETE INSTITUTE
ASTM	AMERICAN SOCIETY FOR TESTING AND MATERIALS
B	BOTTOM
CONC.	CONCRETE
CONT	CONTINUOUS
CONT'D	CONTINUED
DWLS	DOWELS
EF	EACH FACE
FDEP	FLORIDA DEPARTMENT OF ENVIRONMENTAL PROTECTION
FDOT	FLORIDA DEPARTMENT OF TRANSPORTATION
KSI	KIPS PER SQUARE INCH
MHW	MEAN HIGH WATER
MIN	MINIMUM
MLW	MEAN LOW WATER
NAVD	NORTH AMERICAN VERTICAL DATUM
NGVD	NATIONAL GEODETIC VERTICAL DATUM
PERA	PERMITTING, ENVIRONMENT, AND REGULATORY AFFAIRS
PSI	POUNDS PER SQUARE INCH
T	TOP
TYP	TYPICAL
USACE	UNITED STATES ARMY CORPS OF ENGINEERS
UNO	UNLESS NOTED OTHERWISE
W/C	WATER/CEMENT RATIO

RER - NATURAL RESOURCES DIVISION
PRELIMINARY APPROVAL
NAME Ashley Dominguez
DATE 01/17/2023

SYMBOLS LEGEND

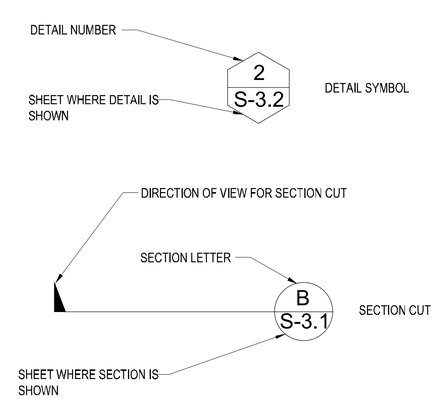

VERTICAL DATUM
Station 8723170

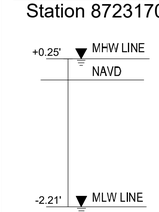

NTS

PROJECT:
1800 W 23RD STREET SEAWALL & DOCK REPLACEMENT PROJECT

CLIENT:
MR. PETER LURIA
800 WEST 23rd STREET
MIAMI BEACH, FL 33140

ENGINEER:
CUMMINS | CEDERBERG
Coastal & Marine Engineering
201 ALHAMBRA CIRCLE, SUITE 601
CORAL GABLES, FL 33134
TEL: +1 305 741-6155 FAX: +1 305-974-1969
WWW.CUMMINSCEDERBERG.COM
COA # 29062

THIS ITEM HAS BEEN DIGITALLY SIGNED AND SEALED BY LEONARD BARRERA ALLEN ON THE DATE ADJACENT TO THE SIGNATURE.

PRINTED COPIES OF THIS DOCUMENT ARE NOT CONSIDERED SIGNED NOR SEALED. THE SIGNATURE MUST BE VERIFIED ON ANY ELECTRONIC COPIES.

SEAL:
Digitally signed by Leonard A Barrera Allen
Date: 2022.12.13 16:34:08
LEONARD BARRERA ALLEN, P.E. #90872

ISSUE	DATE	SUBMISSION / REVISION

CC PROJECT NO:	71900
DRAWN	JDR
CHECKED	JT/KC
SCALE	AS SHOWN

SHEET TITLE
GENERAL NOTES

SHEET 2 OF 8
CM-1.1

J:\Projects\71900_1800 W 23rd Street (Luria)\Drawings\Working\(2022-12-8) 71900 _ 1800_W_23RD.dwg

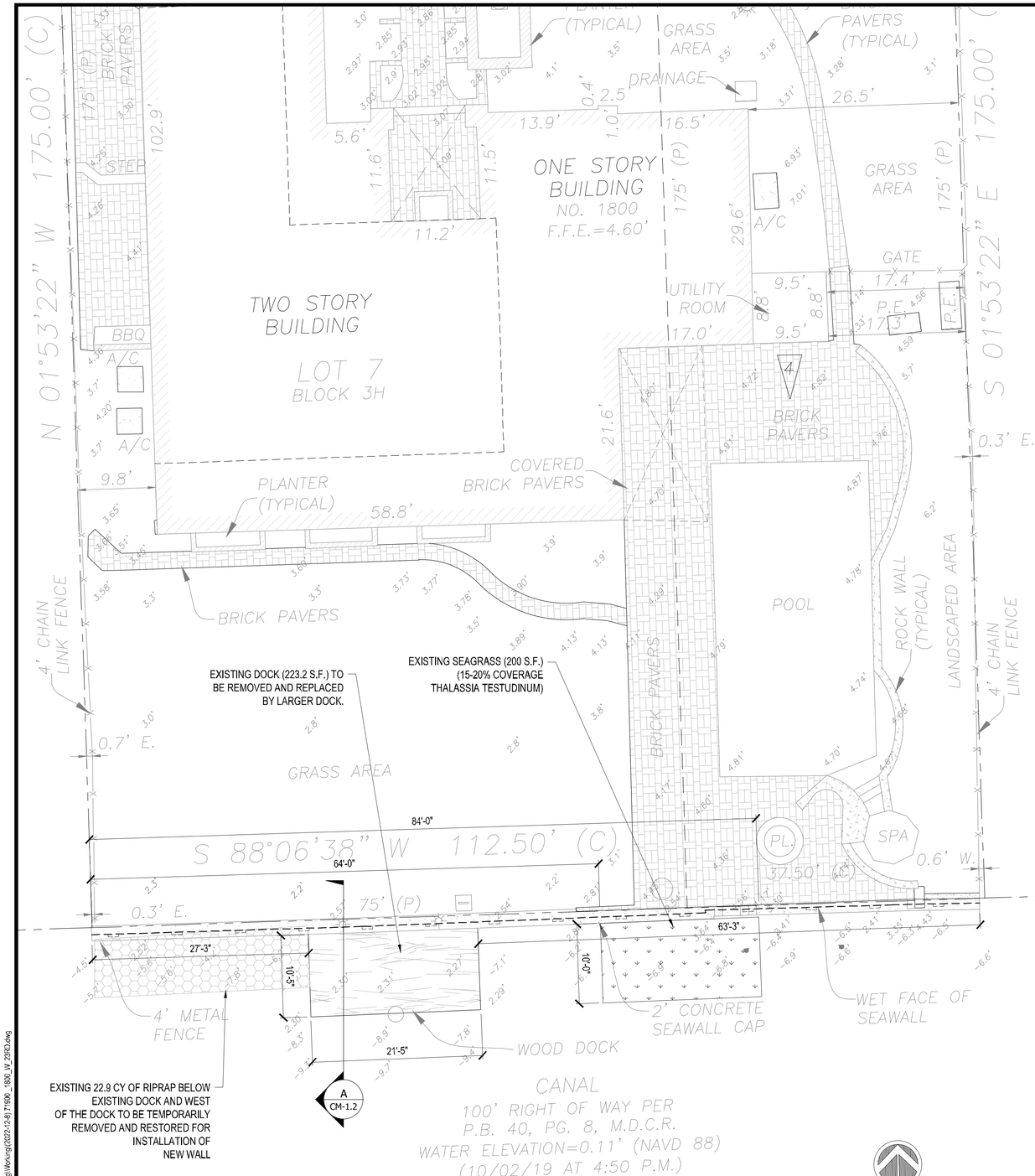

EXISTING CONDITIONS AND DEMOLITION PLAN

SCALE: 1"=8'

GRAPHIC SCALE
22X34: 1"=8'
11X17: 1"=16'

NOTES:

1. SURVEY BY ECS LAND SURVEYORS, ON 10/29/2019.
2. ELEVATIONS REFER TO NORTH AMERICAN VERTICAL DATUM OF 1988 (NAVD 88).

RER - NATURAL RESOURCES DIVISION
PRELIMINARY APPROVAL
NAME Ashley Dominguez
DATE 01/17/2023

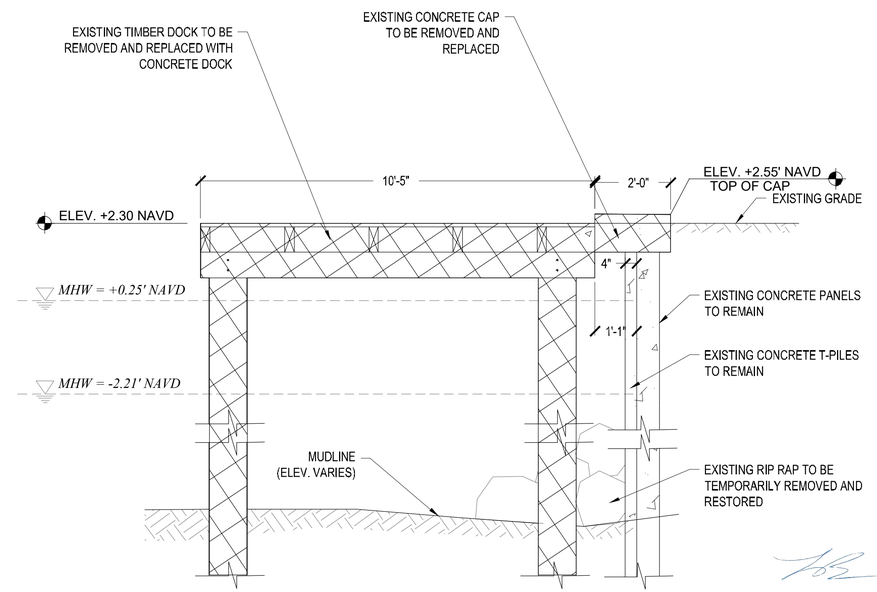

TYPICAL EXISTING SECTION

A
CM-1.2

SCALE: 1"=2'

PROJECT:
1800 W 23RD STREET SEAWALL & DOCK REPLACEMENT PROJECT

CLIENT:
MR. PETER LURIA
800 WEST 23rd STREET
MIAMI BEACH, FL 33140

ENGINEER:
CUMMINS | CEDERBERG
Coastal & Marine Engineering
201 ALHAMBRA CIRCLE, SUITE 601
CORAL GABLES, FL 33134
TEL: +1 305 741-6155 FAX: +1 305-974-1969
WWW.CUMMINSCEDERBERG.COM
COA # 29062

THIS ITEM HAS BEEN DIGITALLY SIGNED AND SEALED BY LEONARD BARRERA ALLEN ON THE DATE ADJACENT TO THE SIGNATURE.

PRINTED COPIES OF THIS DOCUMENT ARE NOT CONSIDERED SIGNED NOR SEALED. THE SIGNATURE MUST BE VERIFIED ON ANY ELECTRONIC COPIES.

SEAL:
LEONARD BARRERA ALLEN LICENSE No. 90872 STATE OF FLORIDA PROFESSIONAL ENGINEER

Digitally signed by Leonard A Barrera Allen
Date: 2022.12.13 16:40:05

LEONARD BARRERA ALLEN, P.E. #90872

ISSUE	DATE	SUBMISSION / REVISION

CC PROJECT NO:	71900
DRAWN	JDR
CHECKED	JT/KC
SCALE	AS SHOWN

SHEET TITLE
EXISTING CONDITIONS AND DEMOLITION PLAN

SHEET 3 OF 8

CM-1.2

J:\Projects\71900_1800 W 23rd Street (Luria)\Drawings\Working\(2022-12-8) 71900_1800_W_23RD.dwg

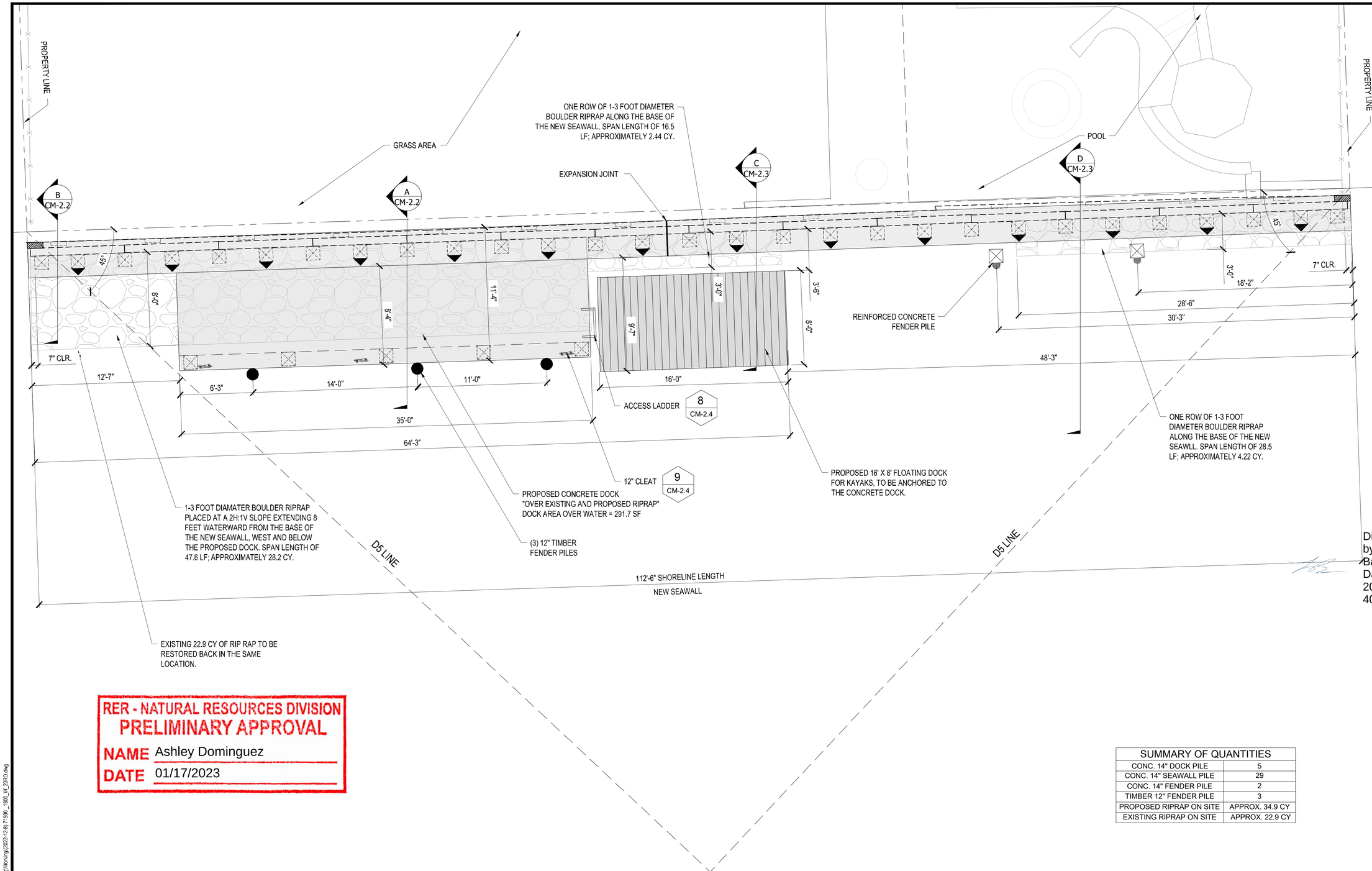

RER - NATURAL RESOURCES DIVISION
PRELIMINARY APPROVAL
NAME Ashley Dominguez
DATE 01/17/2023

SUMMARY OF QUANTITIES	
CONC. 14" DOCK PILE	5
CONC. 14" SEAWALL PILE	29
CONC. 14" FENDER PILE	2
TIMBER 12" FENDER PILE	3
PROPOSED RIPRAP ON SITE	APPROX. 34.9 CY
EXISTING RIPRAP ON SITE	APPROX. 22.9 CY

0 4 8
GRAPHIC SCALE
22X34: 1"=4'
11X17: 1"=8'

PROPOSED SITE PLAN

J:\Projects\71900 1800 W 23rd Street (Luria)\Drawings\Working\2022-12-8\ 71900 _ 1800_W_23RD.dwg

PROJECT:
1800 W 23RD STREET SEAWALL & DOCK REPLACEMENT PROJECT

CLIENT:
MR. PETER LURIA
800 WEST 23rd STREET
MIAMI BEACH, FL 33140

ENGINEER:
CUMMINS | CEDERBERG
Coastal & Marine Engineering
201 ALHAMBRA CIRCLE, SUITE 601
CORAL GABLES, FL 33134
TEL: +1 305 741-6155 FAX: +1 305-974-1969
WWW.CUMMINSCEDERBERG.COM
COA # 29062

THIS ITEM HAS BEEN DIGITALLY SIGNED AND SEALED BY LEONARD BARRERA ALLEN ON THE DATE ADJACENT TO THE SIGNATURE.

PRINTED COPIES OF THIS DOCUMENT ARE NOT CONSIDERED SIGNED NOR SEALED. THE SIGNATURE MUST BE VERIFIED ON ANY ELECTRONIC COPIES.

SEAL:
LEONARD BARRERA ALLEN LICENSE No. 90872 STATE OF FLORIDA PROFESSIONAL ENGINEER

Digitally signed by Leonard A. Barrera Allen
Date: 2022-12-13 16:40:20

LEONARD BARRERA ALLEN, P.E. #90872

SUBMISSION / REVISION	DATE	ISSUE

CC PROJECT NO:	71900
DRAWN	JDR
CHECKED	JT/KC
SCALE	AS SHOWN

SHEET TITLE
PROPOSED SITE PLAN

SHEET 4 OF 8
CM-2.0

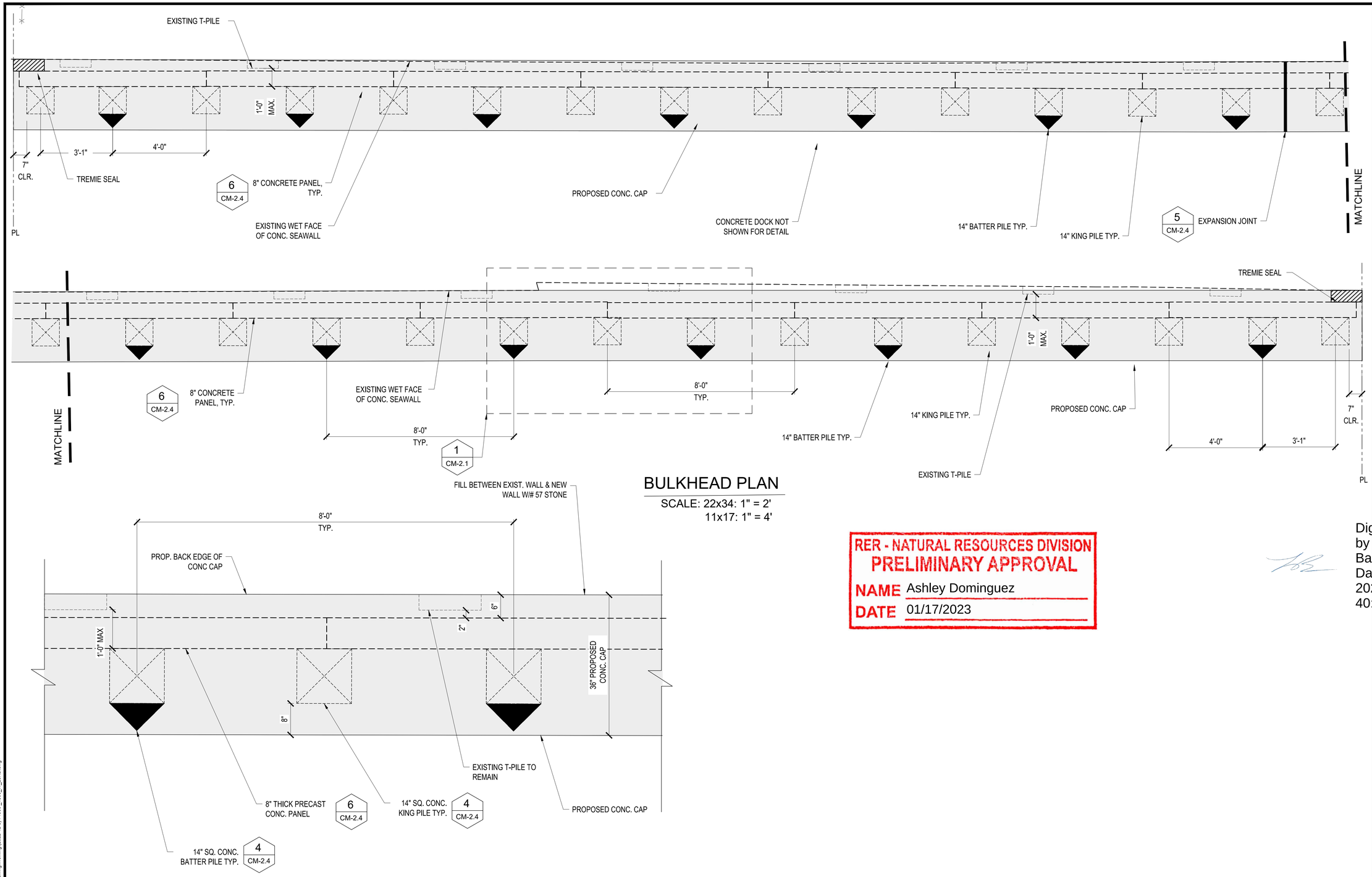

BULKHEAD PLAN

SCALE: 22x34: 1" = 2'
11x17: 1" = 4'

BULKHEAD PARTIAL PLAN

1 CM-2.1

SCALE: 22x34: 1" = 1'
11x17: 1" = 2'

RER - NATURAL RESOURCES DIVISION
PRELIMINARY APPROVAL
NAME Ashley Dominguez
DATE 01/17/2023

SUMMARY OF QUANTITIES	
CONC. 14" KING PILE	15
CONC. 14" BATTER PILE	14

PROJECT:
1800 W 23RD STREET SEAWALL & DOCK REPLACEMENT PROJECT

CLIENT:
MR. PETER LURIA
800 WEST 23rd STREET
MIAMI BEACH, FL 33140

ENGINEER:
CUMMINS | CEDERBERG
Coastal & Marine Engineering
201 ALHAMBRA CIRCLE, SUITE 601
CORAL GABLES, FL 33134
TEL: +1 305 741-6155 FAX: +1 305-974-1969
WWW.CUMMINSCEDERBERG.COM
COA # 29062

THIS ITEM HAS BEEN DIGITALLY SIGNED AND SEALED BY LEONARD BARRERA ALLEN ON THE DATE ADJACENT TO THE SIGNATURE.

PRINTED COPIES OF THIS DOCUMENT ARE NOT CONSIDERED SIGNED NOR SEALED. THE SIGNATURE MUST BE VERIFIED ON ANY ELECTRONIC COPIES.

SEAL:
LEONARD BARRERA ALLEN LICENSE No. 90872 STATE OF FLORIDA PROFESSIONAL ENGINEER

Digitally signed by Leonard A Barrera Allen
Date: 2022-12-23 16:40:32

LEONARD BARRERA ALLEN, P.E. #90872

SUBMISSION / REVISION	DATE	ISSUE

CC PROJECT NO:	71900
DRAWN	JDR
CHECKED	JT/KC
SCALE	AS SHOWN

SHEET TITLE
PROPOSED SEAWALL PLAN

SHEET 5 OF 8

CM-2.1

J:\Projects\71900 1800 W 23rd Street (Luria)\Drawing\Working\2022-12-8\71900_1800_W_23RD.dwg

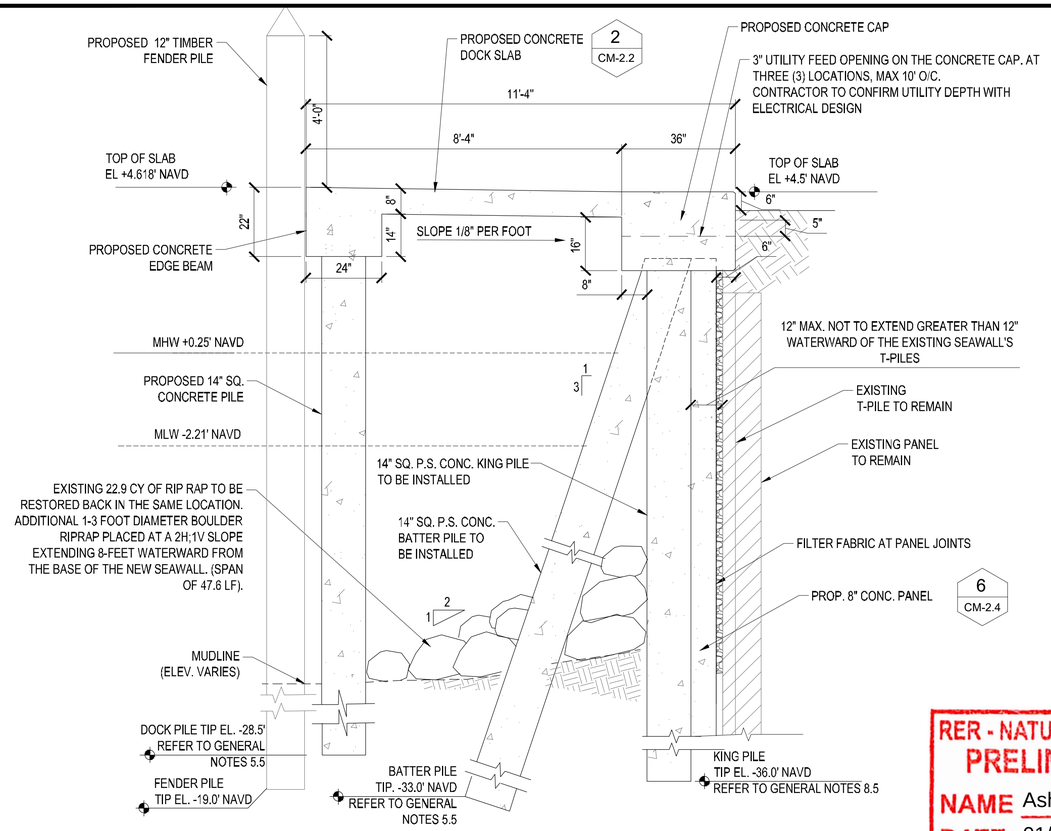

SEAWALL & DOCK CROSS SECTION

A
CM-2.0

SCALE: 22x34: 1" = 2'
11x17: 1" = 4'

RER - NATURAL RESOURCES DIVISION
PRELIMINARY APPROVAL
NAME Ashley Dominguez
DATE 01/17/2023

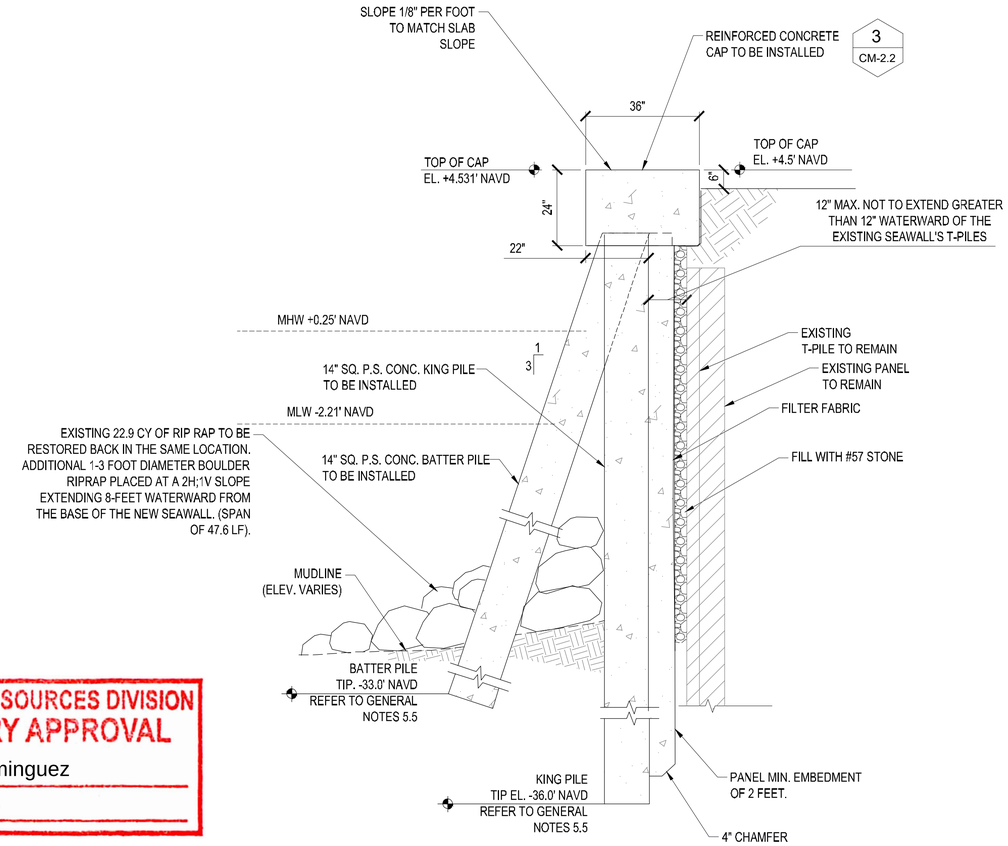

SEAWALL CROSS SECTION

B
CM-2.0

SCALE: 22x34: 1" = 2'
11x17: 1" = 4'

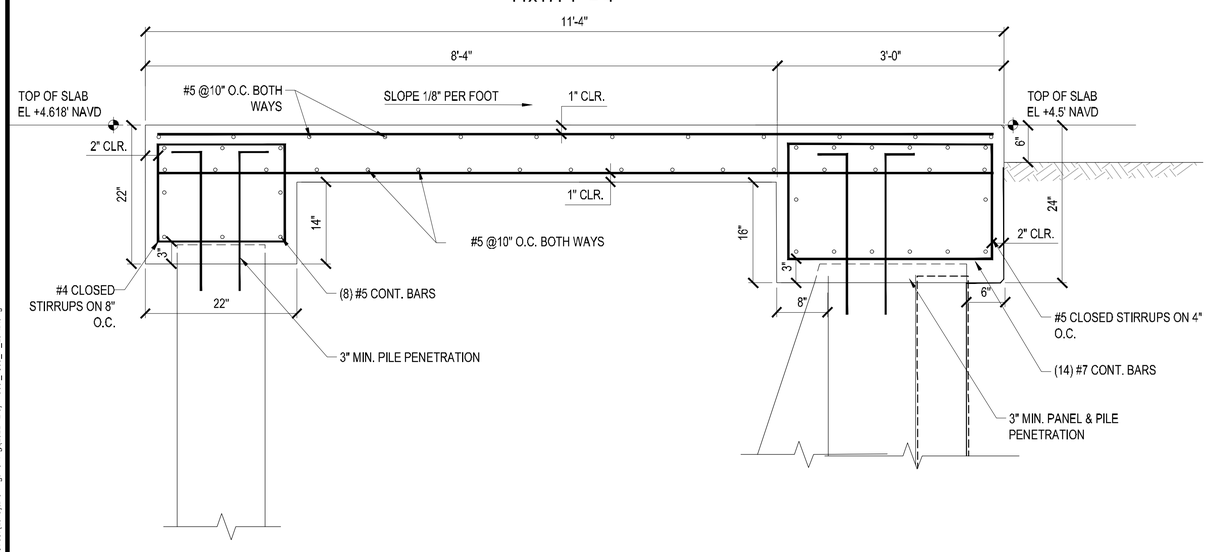

GFRP REINFORCING DETAIL

2
CM-2.2

SCALE: 22x34: 1" = 1'
11x17: 1" = 2'

7
CM-2.4

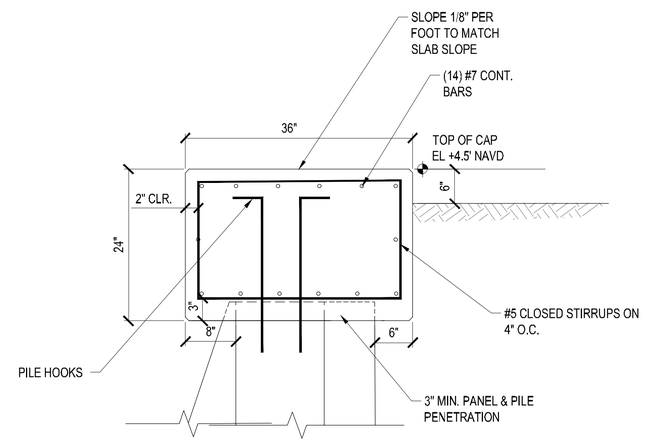

GFRP REINFORCING DETAIL

3
CM-2.2

SCALE: 22x34: 1" = 1'
11x17: 1" = 2'

PROJECT:
1800 W 23RD STREET SEAWALL & DOCK REPLACEMENT PROJECT

CLIENT:
MR. PETER LURIA
800 WEST 23rd STREET
MIAMI BEACH, FL 33140

ENGINEER:
CUMMINS | CEDERBERG
Coastal & Marine Engineering
201 ALHAMBRA CIRCLE, SUITE 601
CORAL GABLES, FL 33134
TEL: +1 305 741-6155 FAX: +1 305-974-1969
WWW.CUMMINSCEDERBERG.COM
COA # 29062

THIS ITEM HAS BEEN DIGITALLY SIGNED AND SEALED BY LEONARD BARRERA ALLEN ON THE DATE ADJACENT TO THE SIGNATURE.

PRINTED COPIES OF THIS DOCUMENT ARE NOT CONSIDERED SIGNED NOR SEALED. THE SIGNATURE MUST BE VERIFIED ON ANY ELECTRONIC COPIES.

SEAL:
LEONARD BARRERA ALLEN LICENSE No. 90872 STATE OF FLORIDA PROFESSIONAL ENGINEER

Digitally signed by Leonard A Barrera Allen
Date: 2022-12-28 16:40:43

LEONARD BARRERA ALLEN, P.E. #90872

ISSUE	DATE	SUBMISSION / REVISION

CC PROJECT NO:	71900
DRAWN	JDR
CHECKED	JT/KC
SCALE	AS SHOWN

SHEET TITLE
BULKHEAD SECTIONS

SHEET 6 OF 8
CM-2.2

J:\Projects\71900 1800 W 23rd Street (Luria)\Drawing\Work\cm\2022-12-28 71900_1800_W_23RD.dwg

RER - NATURAL RESOURCES DIVISION
PRELIMINARY APPROVAL
NAME Ashley Dominguez
DATE 01/17/2023

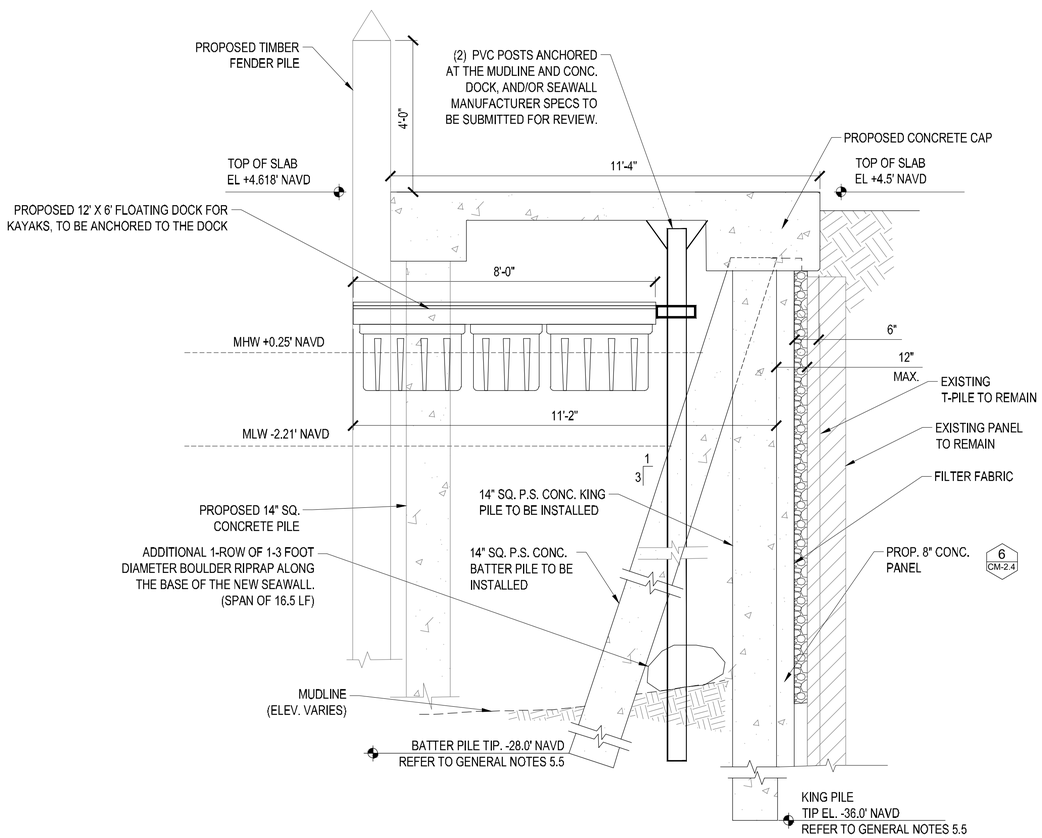

SEAWALL & FVP CROSS SECTION

C
CM-2.0

SCALE: 22x34: 1" = 2'
11x17: 1" = 4'

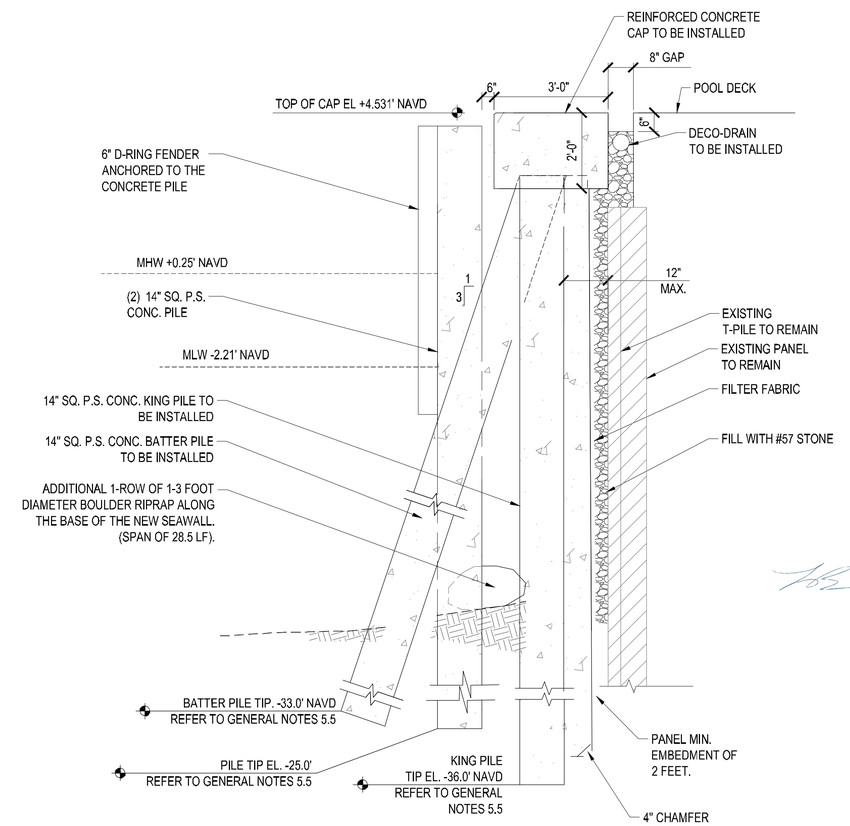

SEAWALL & BOAT LIFT CROSS SECTION

D
CM-2.0

SCALE: 22x34: 1" = 2'
11x17: 1" = 4'

PROJECT:
1800 W 23RD STREET SEAWALL & DOCK REPLACEMENT PROJECT

CLIENT:
MR. PETER LURIA
800 WEST 23rd STREET
MIAMI BEACH, FL 33140

ENGINEER:
CUMMINS | CEDERBERG
Coastal & Marine Engineering
201 ALHAMBRA CIRCLE, SUITE 601
CORAL GABLES, FL 33134
TEL: +1 305 741-6155 FAX: +1 305-974-1969
WWW.CUMMINSCEDERBERG.COM
COA # 29062

THIS ITEM HAS BEEN DIGITALLY SIGNED AND SEALED BY LEONARD BARRERA ALLEN ON THE DATE ADJACENT TO THE SIGNATURE.

PRINTED COPIES OF THIS DOCUMENT ARE NOT CONSIDERED SIGNED NOR SEALED. THE SIGNATURE MUST BE VERIFIED ON ANY ELECTRONIC COPIES.

SEAL:
LEONARD BARRERA ALLEN
REGISTERED PROFESSIONAL ENGINEER
No. 90872
STATE OF FLORIDA

Digitally signed by Leonard A. Barrera-Allen
Date: 2022-12-23 16:40:56

LEONARD BARRERA ALLEN, P.E. #90872

SUBMISSION / REVISION	DATE	ISSUE

CC PROJECT NO:	71900
DRAWN	JDR
CHECKED	JT/KC
SCALE	AS SHOWN

SHEET TITLE
BULKHEAD SECTIONS

SHEET 7 OF 8
CM-2.3

J:\Projects\71900_1800 W 23rd Street (Luria)\Drawings\Working\(2022-12-8) 71900_1800_W_23RD.dwg

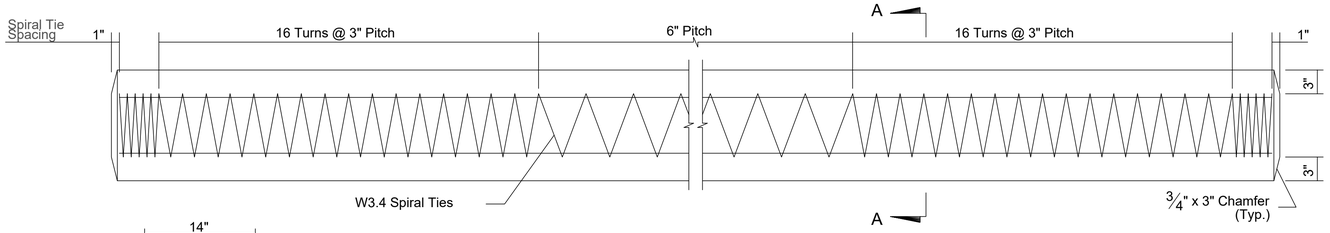

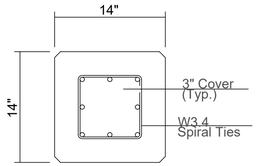

SECTION A-A

CONCRETE PILE DETAIL

SCALE: NTS

4 / CM-2.1

14"x14" PILE SPECIFICATION:

1. Fc' = 6,000 PSI (MIN)
2. (8) 0.6" DIA, GRADE 270 LRS
3. MIN. 3" COVER ON ALL REIN.
4. ALL PILINGS TO FDOT CONCR. CLASS V SPEC.
5. CONTRACTOR TO MAINTAIN PILE LOGS.
6. PILES SHALL BE FROM A FDOT CERTIFIED FACILITY OF PRESTRESSED CONCRETE PRODUCTS.
7. PRODUCTION PILE LENGTH TO BE ANALYZED BY EOR AFTER INDICATOR PILE REVIEW.

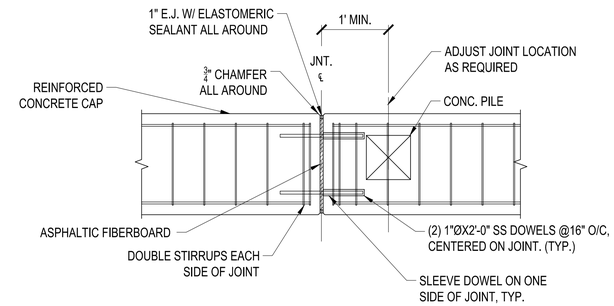

EXPANSION JOINT DETAIL

SCALE: NTS

5 / CM-2.1

RER - NATURAL RESOURCES DIVISION
PRELIMINARY APPROVAL
NAME Ashley Dominguez
DATE 01/17/2023

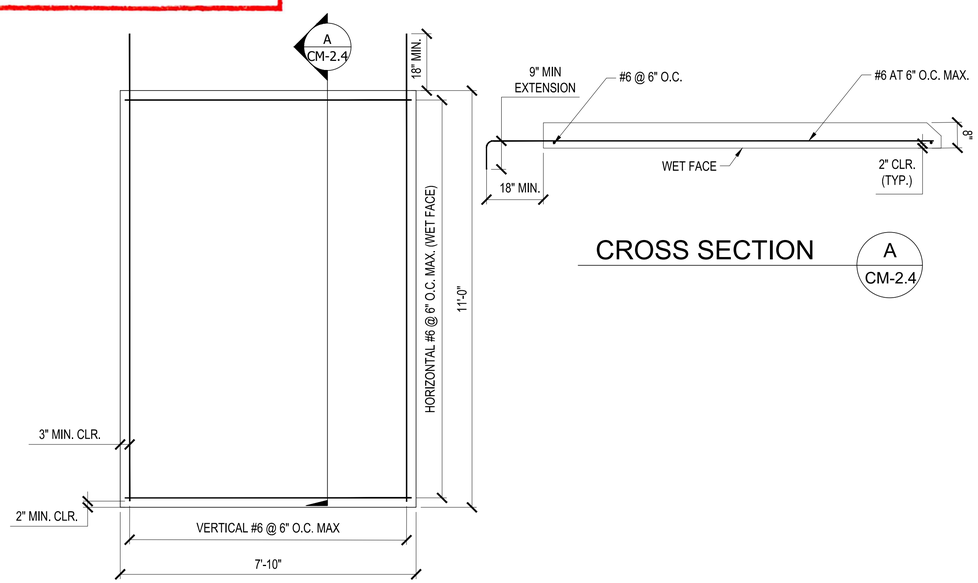

CROSS SECTION

A / CM-2.4

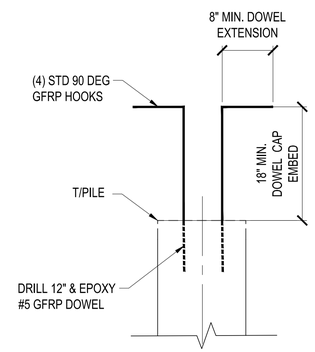

PILE DOWEL EMBED. DETAIL

SCALE: 22x34: 1" = 1'
11x17: 1" = 2'

7 / CM-2.2

GFRP REINFORCED CONCRETE PANEL DETAIL

SCALE: 22x34: 1" = 2'
11x17: 1" = 4'

6 / CM-2.1

PROJECT:
1800 W 23RD STREET SEAWALL & DOCK REPLACEMENT PROJECT

CLIENT:
MR. PETER LURIA
800 WEST 23rd STREET
MIAMI BEACH, FL 33140

ENGINEER:
CUMMINS | CEDERBERG
Coastal & Marine Engineering
201 ALHAMBRA CIRCLE, SUITE 601
CORAL GABLES, FL 33134
TEL: +1 305 741-6155 FAX: +1 305-974-1969
WWW.CUMMINSCEDERBERG.COM
COA # 29062

THIS ITEM HAS BEEN DIGITALLY SIGNED AND SEALED BY LEONARD BARRERA ALLEN ON THE DATE ADJACENT TO THE SIGNATURE.

PRINTED COPIES OF THIS DOCUMENT ARE NOT CONSIDERED SIGNED NOR SEALED. THE SIGNATURE MUST BE VERIFIED ON ANY ELECTRONIC COPIES.

SEAL:
LEONARD BARRERA ALLEN LICENSE No. 90872 STATE OF FLORIDA PROFESSIONAL ENGINEER

Digitally signed by Leonard Barrera Allen
Date: 2022-12-12 16:41:07

LEONARD BARRERA ALLEN, P.E. #90872

ISSUE	DATE	SUBMISSION / REVISION

CC PROJECT NO:	71900
DRAWN	JDR
CHECKED	JT/KC
SCALE	AS SHOWN

SHEET TITLE
SECTIONS & DETAILS

SHEET 8 OF 8
CM-2.4

J:\Projects\71900 1800 W 23rd Street (Luria)\Drawing\Working\2022-12-8\ 71900_1800_W_23RD.dwg