Permit Application

Building Department
1700 Convention Center Drive, 2nd Floor
Miami Beach, Florida 33139
Office: 305.673.7610 Fax: 305.673.7857
http://www.miamibeachfl.gov/building/

Applicant Information (Blue or Black Ink Only)

Office Use Only
Submittal Date:_____
Permit #:_____

Parcel/Folio Number: 02-3222-016-0070

Property Address: 700 W 51 ST Miami Beach FL 33140 | Unit # | Master Permit Number(If applicable) RFC2202057 | Violation # (If applicable)

Permit Type (select one)
- ☐ Building
- ☐ Electrical
- ☐ Mechanical
- ☐ Plumbing
- ☒ Roofing
- ☐ Phased Permit
- ☐ Demo year built__
- ☐ Generator
- ☐ Special Event
- ☐ Fire

Permit Request (select all that apply)
- ☐ New Permit
- ☐ Change of Contractor
- ☐ Change of Architect/Engineer
- ☐ LEED
- ☐ Permit Extension
- ☐ Permit Renewal
- ☐ Permit Revision
- ☐ Change of Use
- ☐ Private Provider
- ☐ City Project

Property Information (select one)
- ☒ Commercial
- ☐ Multi-Family Residential
- ☐ Residential. Single-Family Residential or Duplex

Occupancy Classification

	New Construction/Addition	Alteration/Reconfiguration of Space
Total Value	Square Footage 9274	
	Value of Work$ $40,000	$

Description of Work: Re-Roof Metal

Property Owner	Contractor
Name: Mansion Center LLC	Name: A&E Brothers Roofing Inc
Address/Suite: 700 W 51 St	Address/Suite: 8400 SW 37 St
City/State/Zip Code: Miami Beach FL 33140	City/State/Zip Code: Miami FL 33155
Driver's License/ State Identification Number:	State Identification Number/License: CCC 1330595
E-Mail Address: danifumoleau@gmail.com Daytime phone: (786)546-3523	E-Mail Address: info@aebrothersroofing.com Daytime phone: (305)-815-7208
Architect	**Structural Engineer**
Name/License Number:	Name/License Number:
E-Mail Address: Daytime phone:	E-Mail Address: Daytime phone:

Notice& Certification

This application is hereby made to obtain a permit to do the work and installations as indicated. I certify that all work will be performed to meet the standards of all laws and construction regulations in this jurisdiction. I understand that a separate permit must be secured for **Electrical, Elevator, Fire, Mechanical, Plumbing, Signs, Wells, Pools, Furnaces, Boilers, Heaters, Tanks, Air Conditioners**, etc.

Owner's Affidavit: I certify that all the forgoing information is correct. Owner Certifies that the aforementioned Contractor has the authorization to perform the work as specified above.

Lessee's Affidavit: Lessee certifies that he has full consent and authorization from owner of subject property to perform the abovementioned work and to hire above captioned contractor.

In addition to the requirements of this permit, there may be additional restrictions applicable to this property that may be found in the public records of this county, and there may be additional permits required from other governmental entities such as the Environmental Division of Miami-Dade County; Permitting, Environment and Regulatory Affairs; Water & Sewer Department; Department of Environmental Protection; South Florida Water Management District; Miami-Dade County Impact Fee water management districts; state agencies; and/or federal agencies.

Under penalties of perjury, I declare that to the best of my knowledge, the facts stated in this document are true. Any information found to be false may cause the revocation and/or denial of the permit and/or Certificate of Occupancy.

OWNER'S ELECTRONIC SUBMISSION STATEMENT: Under penalty of perjury, I declare that all the information contained in this permit application is true and correct.

WARNING TO OWNER: YOUR FAILURE TO RECORD A NOTICE OF COMMENCEMENT MAY RESULT IN YOUR PAYING TWICE FOR IMPROVEMENTS TO YOUR PROPERTY. A NOTICE OF COMMENCEMENT IS REQUIRED FOR ANY WORK WITH COST EXCEEDING $2500.00.

☐ Owner/Lesseefor new permits**(Documentation establishing ownership may be requested)**
☐ Master Permit Contractor of Record **(For sub-permit/ change of contractor)**

STATE OF FLORIDA COUNTY MIAMI-DADE | STATE OF FLORIDA COUNTY MIAMI-DADE

Signature of Owner/Mst. Qualifier_____ | Signature of Qualifier_____

Sworn to & subscribed before me this 7 day of NOV, 20 22 | Sworn to & subscribed before me this 7 day of NOV, 20 22

PRINT NAME: ADICHABOI | PRINT NAME: Enduvys E. Espinosa

Personally Know FL DL Produced ID C140000066245-0 | Personally Known _____ Produced ID _____

Signature of Notary Public | Signature of Notary Public

Notary Name: Yinet Concepcion | Notary Name: Yinet Concepcion

Notary Public State of Florida
Yinet Concepcion
My Commission GG 963338
Expires 02/27/2024

(SEAL) | (SEAL)

OFFICE OF THE PROPERTY APPRAISER

Summary Report

Generated On : 11/4/2022

Property Information	
Folio:	02-3222-016-0070
Property Address:	700 W 51 ST Miami Beach, FL 33140-0000
Owner	MANSION CENTER LLC
Mailing Address	1550 MADRUGA AVE #120 CORAL GABLES, FL 33015
PA Primary Zone	0100 SINGLE FAMILY - GENERAL
Primary Land Use	1211 MIXED USE-STORE/RESIDENTIAL : RETAIL OUTLET
Beds / Baths / Half	8 / 8 / 0
Floors	2
Living Units	8
Actual Area	Sq.Ft
Living Area	Sq.Ft
Adjusted Area	15,730 Sq.Ft
Lot Size	23,940 Sq.Ft
Year Built	1926

Assessment Information			
Year	2022	2021	2020
Land Value	$2,523,276	$1,729,665	$1,729,665
Building Value	$668,377	$588,173	$588,173
XF Value	$22,572	$22,914	$23,256
Market Value	$3,214,225	$2,340,752	$2,341,094
Assessed Value	$2,574,827	$2,340,752	$2,341,094

Taxable Value Information	2022	2021	2020
County			
Exemption Value	$0	$0	$0
Taxable Value	$2,574,827	$2,340,752	$2,341,094
School Board			
Exemption Value	$0	$0	$0
Taxable Value	$3,214,225	$2,340,752	$2,341,094
City			
Exemption Value	$0	$0	$0
Taxable Value	$2,574,827	$2,340,752	$2,341,094
Regional			
Exemption Value	$0	$0	$0
Taxable Value	$2,574,827	$2,340,752	$2,341,094

Benefits Information				
Benefit	Type	2022	2021	2020
Non-Homestead Cap	Assessment Reduction	$639,398		

Note: Not all benefits are applicable to all Taxable Values (i.e. County, School Board, City, Regional).

Short Legal Description

LAKE VIEW HEIGHTS SUB PB 27-5
LOTS 8 TO 10 INC BLK 25
LOT SIZE 180.000 X 133
OR 18731-0524 0899 4
COC 21511-0097 07 2003 5

Sales Information

Previous Sale	Price	OR Book-Page	Qualification Description
12/30/2009	$1,500,000	27141-3024	Qual by exam of deed
07/01/2003	$0	21484-0626	Sales which are disqualified as a result of examination of the deed
07/01/2003	$0	21511-0097	Sales which are disqualified as a result of examination of the deed
08/01/1999	$0	18731-0524	Sales which are disqualified as a result of examination of the deed

The Office of the Property Appraiser is continually editing and updating the tax roll. This website may not reflect the most current information on record. The Property Appraiser and Miami-Dade County assumes no liability, see full disclaimer and User Agreement at http://www.miamidade.gov/info/disclaimer.asp

Version:

Detail by Entity Name

Florida Profit Corporation
OCEAN FIRST REALTY, INC.

Filing Information

Document Number	P03000003801
FEI/EIN Number	74-3091140
Date Filed	01/07/2003
State	FL
Status	ACTIVE

Principal Address

440 N Andrews
Fort Lauderdale, FL 33301

Changed: 04/27/2014

Mailing Address

5002 North Bay Rd
MIAMI BEACH, FL 33140

Changed: 04/27/2014

Registered Agent Name & Address

Josh Bennett
Law Office of Josh Bennett
440 N Andrew
Fort Lauderdale, FL 33301

Name Changed: 04/27/2014

Address Changed: 04/27/2014

Officer/Director Detail

Name & Address

Title Director

CHABLI, ADI
5002 n bay rd
MIAMI BEACH, FL 33140

Annual Reports

Report Year	Filed Date
2020	05/03/2020
2021	04/14/2021
2022	04/26/2022

Document Images

04/26/2022 -- ANNUAL REPORT	View image in PDF format
04/14/2021 -- ANNUAL REPORT	View image in PDF format
05/03/2020 -- ANNUAL REPORT	View image in PDF format
04/25/2019 -- ANNUAL REPORT	View image in PDF format
03/05/2018 -- ANNUAL REPORT	View image in PDF format
03/23/2017 -- ANNUAL REPORT	View image in PDF format
04/25/2016 -- ANNUAL REPORT	View image in PDF format
04/22/2015 -- ANNUAL REPORT	View image in PDF format
04/27/2014 -- ANNUAL REPORT	View image in PDF format
04/25/2013 -- ANNUAL REPORT	View image in PDF format
04/23/2012 -- ANNUAL REPORT	View image in PDF format
02/07/2011 -- ANNUAL REPORT	View image in PDF format
02/16/2010 -- ANNUAL REPORT	View image in PDF format
04/09/2009 -- ANNUAL REPORT	View image in PDF format
03/05/2008 -- ANNUAL REPORT	View image in PDF format
04/03/2007 -- ANNUAL REPORT	View image in PDF format
01/05/2006 -- ANNUAL REPORT	View image in PDF format
03/09/2005 -- ANNUAL REPORT	View image in PDF format
06/30/2004 -- ANNUAL REPORT	View image in PDF format
01/07/2003 -- Domestic Profit	View image in PDF format

Detail by Entity Name

Florida Limited Liability Company
MANSION CENTER LLC

Filing Information

Document Number	L09000115999
FEI/EIN Number	42-1770010
Date Filed	12/07/2009
Effective Date	12/07/2009
State	FL
Status	ACTIVE

Principal Address

708 WEST 51 STREET
MIAMI BEACH, FL 33140

Changed: 04/26/2013

Mailing Address

5002 n bay rd
MIAMI BEACH, FL 33140

Changed: 04/25/2019

Registered Agent Name & Address

Josh N. Bennett, ESQ.,P.A
Law Office of Josh Bennett
440 West Andrews
MIAMI, FL 33301

Name Changed: 04/26/2013

Address Changed: 04/27/2014

Authorized Person(s) Detail

Name & Address

Title MGR

Ocean First Realty Inc.
708 WEST 51 STREET
2nd Floor office
MIAMI BEACH, FL 33140

Annual Reports

Report Year	Filed Date
2020	05/03/2020
2021	04/14/2021
2022	04/26/2022

Document Images

04/26/2022 -- ANNUAL REPORT	View image in PDF format
04/14/2021 -- ANNUAL REPORT	View image in PDF format
05/03/2020 -- ANNUAL REPORT	View image in PDF format
04/25/2019 -- ANNUAL REPORT	View image in PDF format
03/05/2018 -- ANNUAL REPORT	View image in PDF format
03/25/2017 -- ANNUAL REPORT	View image in PDF format
04/25/2016 -- ANNUAL REPORT	View image in PDF format
04/22/2015 -- ANNUAL REPORT	View image in PDF format
04/27/2014 -- ANNUAL REPORT	View image in PDF format
04/26/2013 -- ANNUAL REPORT	View image in PDF format
04/23/2012 -- ANNUAL REPORT	View image in PDF format
04/19/2011 -- ANNUAL REPORT	View image in PDF format
02/16/2010 -- ANNUAL REPORT	View image in PDF format
12/07/2009 -- Florida Limited Liability	View image in PDF format

MIAMIBEACH

Building Department
1700 Convention Center Drive, 2nd floor
Miami Beach, Florida 33139
Telephone: 305-673-7610
www.miamibeachfl.gov

CONSTRUCTION COST AFFIDAVIT

For Office Use Only

Permit/Process No	
Date of Submittal	

I Adi Chabli, acting as agent (owner, registered agent, or legal representative) and I (general contractor/ sub-contractor), A&E Brothers Roofing, Inc do hereby attest that the construction costs indicated herein are accurate for the construction project located at: 700 W 51 St Miami Beach FL 33140.

Master Permits:

Total project cost: $ _____ Building cost (excludes roofing, windows, railings, and MEP) $: _____

Stand alone and sub-permits

Roofing $: 40,000 Windows $: _____ Railings $: _____

Electrical $: _____ Mechanical $: _____ Plumbing $: _____

Other $: _____ Description: _____

Registered Owner/Agent or GC: _____

Signature of Owner/Agent or GC (for Sub-permits) Mansion Center LLC

Printed Name: ADI CHABLI

STATE OF Florida

COUNTY OF Miami Dade

Notary Public State of Florida
Yinet Concepcion
My Commission GG 963338
Expires 02/27/2024

The foregoing instrument was acknowledged before me this 07 day of NOV, 20 22 by Adi Chabli, who is personally known to me or who has produced Driver License C140-000-66-145-0 as identification and who has taken an oath.

Notary Public, State of Florida

Yinet Concepcion
Printed Name

Commission Number:

My Commission Expires:

Notary Public State of Florida
Yinet Concepcion
My Commission GG 963338
Expires 02/27/2024

Registered Contractor: A&E Brothers Roofing Inc

Signature of Qualifier: _____

Printed Name: Endurys E. Espinosa

STATE OF Florida

COUNTY OF Miami Dade

Notary Public State of Florida
Yinet Concepcion
My Commission GG 963338
Expires 02/27/2024

The foregoing instrument was acknowledged before me this 07 day of NOV, 20 22 by Endurys Espinosa, who is personally known to me or who has produced Personally Known as identification and who has taken an oath.

Notary Public, State of Florida

Yinet Concepcion
Printed Name

Commission Number:

My Commission Expires:

Notary Public State of Florida
Yinet Concepcion
My Commission GG 963338
Expires 02/27/2024

Revised February 25, 2020

MIAMIBEACH

Miami Beach HVHZ Electronic Roof Permit Form
Commercial Re-roofing Statement for Existing Buildings

Contractor Name: A&E Brothers Roofing, Inc

Process Number:

Job Address: 700 W 51 St Miami FL 33140

The following applicable statements, for low slope roof systems only, are required to be completed when applying for commercial reroofing permit applications.

Is there insulation in the existing roof system? Yes ☐ No ☒
If yes, then I attest that the insulation to be installed in the proposed roofing system shall have the same thickness and R-Value as the existing insulation. *Note: Structures built after March 15, 1979 must comply with the Florida Energy Code.*

☐ Architect ☐ P.E. ☐ Roofing Contractor License Number: CCC 1330595

Signature: (*required*)

☒ **No Change**

I attest that the proposed roofing system is an exact replacement of the existing roofing system. I also attest that existing overflow drains and/or scuppers are sized so that no more than 5" of water will accumulate on any portion of this roof, should the primary drainage system be blocked. 1616.3 FBC

☐ Architect ☐ P.E. ☐ Roofing Contractor License Number: CCC 1330595

Signature: (*required*)

☒ **Change to the roofing system**
Roofing permit applications in other than Group R-3 occupancy, involving a change in the roofing system and recovery applications must include signed and sealed calculations for the supporting structure, and a statement as follows.

"I have reviewed the structural and drainage adequacy of the existing roof structure with regard to the proposed roofing system and hereby approve the installation as proposed."

☐ Architect ☐ P.E. License Number:

Signature: (*required*)

NOTE: ALL SHEETS MUST BE REVIEWED

MIAMI-DADE COUNTY DEPARTMENT OF REGULATORY AND ECONOMIC RESOURCES
Herbert S. Saffir Permitting and Inspection Center
11805 SW 26th Street (Coral Way) • Miami, Florida 33175-2474 • (786) 315-2000

APPLICATION FOR MUNICIPAL PERMIT APPLICANTS THAT REQUIRE PLAN REVIEW FROM MIAMI-DADE FIRE RESCUE AND/OR ENVIRONMENTAL SERVICES

PROVIDE MUNICIPAL PROCESS NUMBER HERE

LOCATION OF IMPROVEMENTS

Job Address 700 W 51 Miami Beach FL 33140
Folio 02-3222-016-0070
Lot 5 8 TO 10 Block 25
Subdivision Lake view Heigths SUB Bpg
Metes and bounds

CONTRACTOR INFORMATION

Contractor No. CCC1330595
Last four (4) digits of Qualifier No. 2980
Contractor Name A+E Brothers Roofing
Qualifier Name Enderys E. Espinosa
Address 8400 SW 37 ST
City Miami State FL Zip 33155

TYPE OF IMPROVEMENTS

[ ] New Construction on Vacant Land
[ ] Alteration Interior
[ ] Alteration Exterior
[ ] Relocation of Structure
[ ] Enclosure
[ ] Repair
[ ] Repair Due to Fire
[ ] Demolish
[ ] Shell Only
[ ] Addition Attached
[ ] Addition Detached
[X] Re-Roof
[ ] Foundation Only
[ ] Tent

Current use of property Commercial
Description of Work Re-Roof Metal
Sq. Ft. 9274 Units 0 Floors 2
Value of Work $40,000

PERMIT TYPE

[X] MBLD* Category 96
[ ] MELE
[ ] MPLU
[ ] MLPG
[ ] MMEC
[ ] FIRE

REVIEW STATUS

[ ] Chg. Contractor
[ ] Re-Issue
[ ] Re-Stamp
[ ] Revision
[ ] Not Applicable for Fire

OWNER'S NAME

Owner Mansion Center LLC
Address 700 W 51 ST
City Miami Beach State FL Zip 33140
Phone (786) 546-3523
Last four (4) digits of Owner's Social Security No.

PERSON TO PICK UP PLANS

Name Rosabel Martinez
Address 8400 SW 37 St
City Miami State Zip
Phone (305)-815-7208

ARCHITECT / ENGINEER

Owner
Address
City State Zip
Phone

FIRE SPECIAL REQUEST PLAN REVIEW (SRI)

I am requesting a Special Request Plan Review (SRI) to be scheduled as soon as possible. There is a minimum charge of one-hour. Please contact the Fire Department for current rate.

1st Request: Date:
2nd Request: Date:
3rd Request: Date:

If the applicant is a known named violator with: unpaid civil penalties; unpaid administrative costs of hearing; unpaid County investigative, enforcement, testing, or monitoring costs; or unpaid liens, any or all of which are owed to Miami-Dade County pursuant to the provisions of the Code of Miami-Dade County, Florida, a hold on the review may be placed on this application.

Florida Department of
Environmental Protection
Division of Air Resource Management

Department of Regulatory and Economic Resources
Environmental Resources Management
701 NW 1st Court, 2nd Floor
Miami, Florida 33136-3912
T: 305-372-6925 Fax: 305-372-6954
miamidade.gov

NOTICE OF DEMOLITION OR ASBESTOS RENOVATION

TYPE OF NOTICE (CHECK ONE ONLY) : ☒ ORIGINAL ☐ REVISED ☐ CANCELLATION ☐ COURTESY

TYPE OF PROJECT (CHECK ONE ONLY) : ☐ DEMOLITION ☐ RENOVATION ☒ ROOFING

IF DEMOLITION, IS IT AN ORDERED DEMOLITION? ☐ YES ☐ NO

IF RENOV ATION:

IS IT AN EMERGENCY RENO VATION OPERATION? ☐ YES ☐ NO File #_____

IS IT A PLANNED RENO VATION OPERATION? ☐ YES ☐ NO Process #_____

I. Facility Name Mansion Center LLC
Address 700 W 51 ST
City Miami Beach State FL Zip 33140 County Miami Dade
Site _____ Consultant Inspecting Site _____
Building Size _____ (Square Feet) # of Floors _____ Building Age in Years _____
Prior Use: ☐ School/College/University ☐ Residence ☐ Small Business Other Commercial
Present Use: ☐ School/College/University ☐ Residence ☐ Small Business Other _____

II. Facility Owner Mansion Center LLC Phone (786)-546-3523
Address 700 W 51 ST
City Miami Beach State FL Zip 33140

III. Contractor' s Name A&E Brothers Roofing Inc Phone (305)-815-7208
Address 8400 SW 37 ST
City Miami State FL Zip 33155
Is the contractor exempt from licensure under section 469.002(4), F .S.? ☐ YES ☒ NO

IV. Scheduled Dates: (Notice must be postmarked 10 working da ys before the project start date)
Asbestos Remov al (mm/dd/yy) Start: 11/25/22 Finish: 01/25/22 Demo/Renov ation (mm/dd/yy) Start: _____ Finish: _____

V. Description of planned demolition or reno vation work to be performed and methods to be employed, including demolition or renovation techniques to be used and description of affected facility components. Hand tools and Manual LaBOR

Procedures to be Used (Check All That Apply):

☒	Strip and Removal	☐	Glove Bag	☐	Bulldozer	☐	Wrecking Ball
☐	Wet Method	☐	Dry Method	☐	Explode	☐	Burn Down
OTHER:							

VI. Procedur es for Unexpected RACM: Notify DERM

VII. Asbestos W aste Transporter: Name Josef Velazquez Phone (786)-246-8896
Address 200 NE 2 Ave
City Homestead State FL Zip _____

VIII. Waste Disposal Site: Name Medley Land Fill
Address 9350 NW 89 Ave
City Medley State FL Zip 33178

IX. RACM or ACM: Procedure, including analytical methods, employed to detect the presence of RACM and Category I and II nonfriable ACM.
Asbestos Assumed

Amount of RACM or ACM*

_____ square feet surfacing material
_____ linear feet pipe
_____ cubic feet of RACM off facility components
_____ square feet cementitious material
_____ square feet resilient flooring
9274 square feet asphalt roofing

*Identify and describe surfacing material and other materials as applicable:

I certify that the above information is correct and that an individual trained in the provisions of this regulation (40 CFR Part 61, Subpart M) will be on-site during the demolition or renovation and evidence that the required training has been accomplished by this person will be available for inspection during normal business hours. I have read and understood the additional information provided on the back of this form.

Rosabel Martinez
(Print Name of Owner/Operator)

(Signature of Owner/Operator) 11/07/22 (Date) (305) -815-7208 (Contact phone #)

RER USE ONLY Postmark/Date Received ID #

BONE WHITE

BURGUNDY

CHARCOAL GRAY

COLONIAL RED

DARK BRONZE

DOVE GRAY

DEEP RED

EVERGLADE MOSS

FOREST GREEN

HARTFORD GREEN

HEMLOCK GREEN

MANSARD BROWN

MEDIUM BRONZE

MATTE BLACK

PACIFIC BLUE

PATINA GREEN

ROYAL BLUE

SLATE BLUE

SLATE GRAY

SUNNET BLUE

SANDSTONE

SIERRA TAN

STONE WHITE

TERRA COTTA

ENGLERT®

Standard COLORS and COATINGS

PERMACOLOR 3500 PERMAMETALLIC 3500

Full Strength 70% Kynar 500®/Hylar 5000®

All colors available in Galvalume and Aluminum

To view current SRI values, please visit the Englert website.

Colors shown are close to actual finishes however, due to the limitations of printing processes, slight variations may exist. Please contact Englert for actual color chips before ordering.

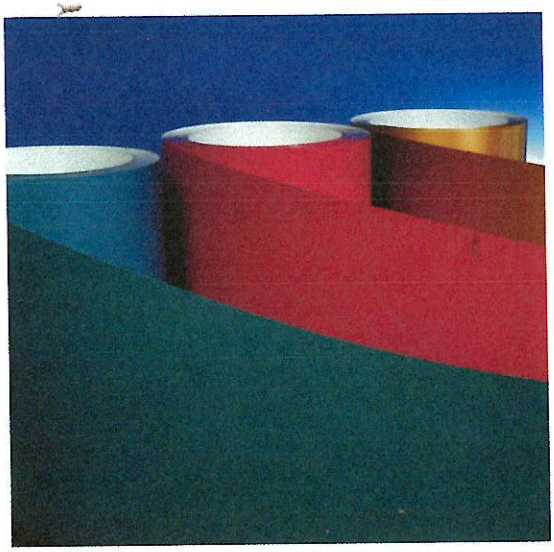

ENERGY STAR PARTNER

U.S. GREEN BUILDING COUNCIL MEMBER

MILL FINISH

GALVALUME-PLUS®

PERMAMETALLICS 3500*

*Premium priced paint systems.

Extra $4.00 per

CHAMPAGNE* (Metallic) Mica 2-Coat System

COPPER* (Metallic) Mica 2-Coat System

PREWEATHERED GALVALUME®* (Metallic) Mica 2-Coat System

MIAMIBEACH

REQUIRED OWNERS NOTIFICATION FOR ROOFING CONSIDERATIONS

It is the responsibility of the roofing contractor to provide the owner with the required roofing permit, and to explain to the owner the content of this form. The owner's initials in the designated space indicates that the item has been explained.

[ ] **1. Aesthetics-workmanship:** The workmanship provisions of Chapter 15 (High Velocity Hurricane Zone) are for the purpose of providing that the roofing system meets the wind resistance and water intrusion performance standards. Aesthetics (appearance) are not a consideration with respect to workmanship provisions. Aesthetic issues such as color or architectural appearance, that are not part of a zoning code, should be addressed as part of the agreement between the owner and the contractor.

[ ] **2. Renailing wood decks:** When replacing roofing, the existing wood roof deck may have to be renailed in accordance with the current provisions of Chapter 16 (High Velocity Hurricane Zones) of the Florida Building Code. (The roof deck is usually concealed prior to removing the existing roof system).

[ ] **3. Common roofs:** Common roofs are those which have no visible delineation between neighboring units (i.e. townhouses, condominiums, etc.). In buildings with common roofs, the roofing contractor and/or owner should notify the occupants of adjacent units of roofing work to be performed.

[ ] **4. Exposed ceilings:** Exposed, open beam ceilings are where the underside of the roof decking can be viewed from below. The owner may wish to maintain the architectural appearance; therefore, roofing nail penetrations of the underside of the decking may not be acceptable. The owner provides the option of maintaining this appearance.

[ ] **5. Ponding water:** The current roof system and/or deck of the building may not drain well and may cause water to pond (accumulate) in low-lying areas of the roof. Ponding can be an indication of structural distress and may require the review of a professional structural engineer. Ponding may shorten the life expectancy and performance of the new roofing system. Ponding conditions may not be evident until the original roofing system is removed. Ponding conditions should be corrected.

[ ] **6. Overflow scuppers (wall outlets):** It is required that rainwater flow off so that the roof is not overloaded from a build up of water. Perimeter/edge walls or other roof extensions may block this discharge if overflow scuppers (wall outlets) are not provided. It may be necessary to install overflow scuppers in accordance with the requirements of: Chapter 15 and 16 herein and the ***Florida Building Code, Plumbing.***

[ ] **7. Ventilation:** Most roof structures should have some ability to vent natural airflow through the interior of the structural assembly (the building itself). The existing amount of attic ventilation shall not be reduced.

Owner's/Agent's Signature: [ ] Date: 10 / 07 / 2022

Contractor's Signature: [ ] Permit Number: [ ]

Property Address: 700 W 51 St Miami Beach FL 33140

MIAMIBEACH

City of Miami Beach (CMB)
2020 HVHZ Electronic Roof Permit Form

Section A (General Information)

Master Permit No: [ ] **Process No.** [ ]

Contractor's Name: A&E Brothers Roofing, Inc

Job Address: 700 W 51 St Miami Beach FL 33140

Roof Category

- [ ] Low Slope
- [ ] Mechanically Fastened Tile
- [ ] Mortar/Adhesive Set Tile
- [ ] Asphaltic Shingles
- [x] Tile Metal Panel/Shingles
- [ ] Wood Shingles/Shakes
- [ ] Sprayed Polyurethane Foam
- [ ] Other [ ]

Roof Mean Height **(h)** [ ] ft.

Roof Type

- [ ] New Roof
- [x] Re-Roofing
- [ ] Recovering
- [ ] Repair
- [ ] Maintenance

Are there Gas Vent Stacks located on the roof? [ ] Yes [ ] No If yes, what type? [ ] Natural [ ] LPGX

Roof System Information

Low slope roof area (ft.²): [ ] Steep Sloped area (ft.²): 9274 Total (ft.²): 9274

Section B (Roof Plan)

Sketch Roof Plan: Illustrate all levels and sections, roof drains, scuppers, overflow scuppers and overflow drains. Include dimensions of sections and levels, clearly identify dimensions of elevated pressure zones and location of parapets.

Perimeter Width a' **(.6h)**: [ ] ft. Corner Length **(.6h)**: [ ] ft. Corner Width: **(.2h)**: [ ] ft.

See

Attached

Sketch

No mechanical W/K

ROOF AREA
700 W 51 ST
MIAMI BEACH, FLORIDA

Total Area
9273.64 sqft
Total Slopes: 24

Area 1	5916.22 sqft
Area 2	3357.42 sqft

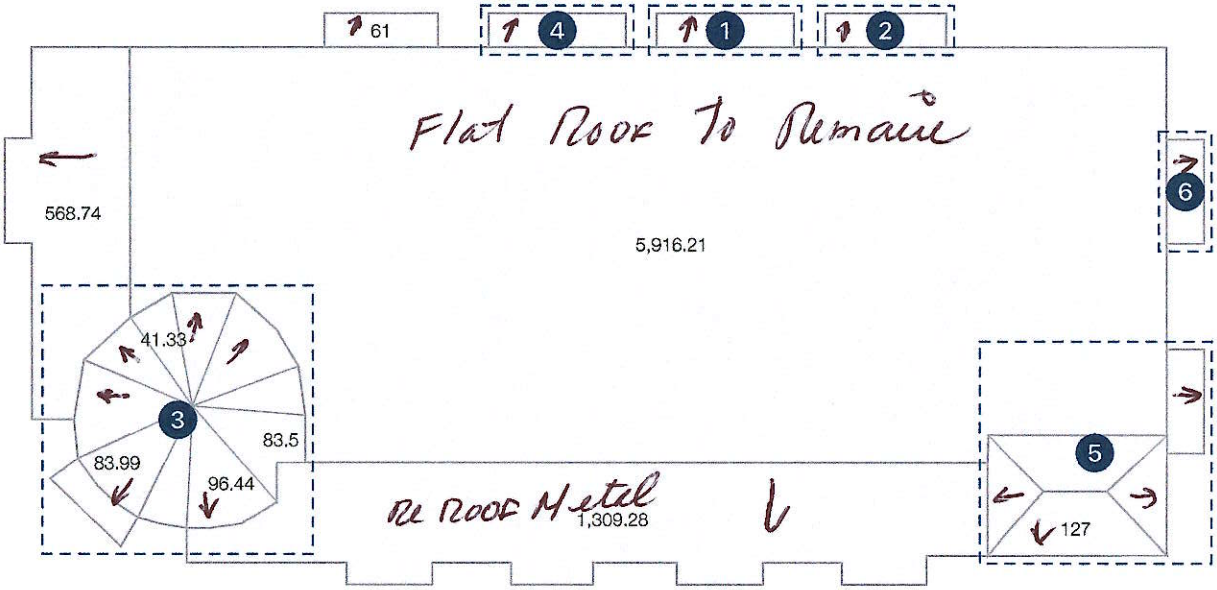

ROOF AREA
700 W 51 ST
MIAMI BEACH, FLORIDA

Ridge
7' 9"

Hip
187' 3"

Valley
—

Rake
117' 7"

Eave
287'

Flashing
351' 7"

Step Flashing
60' 3"

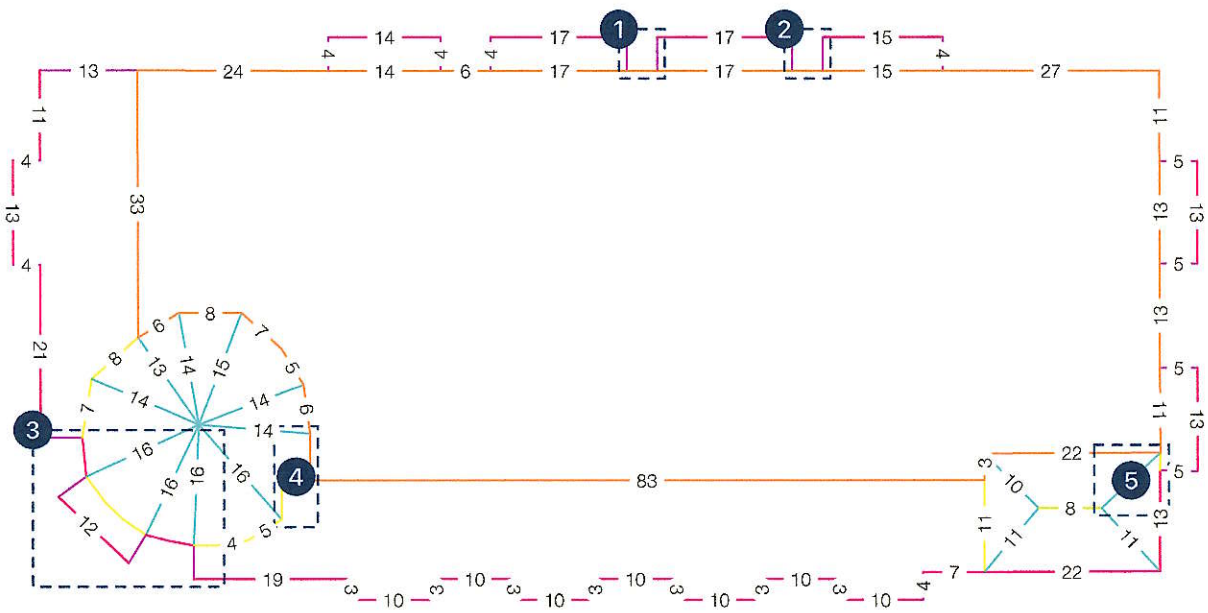

PITCH
700 W 51 ST
MIAMI BEACH, FLORIDA

Pitch Scale:

24/12

0/12

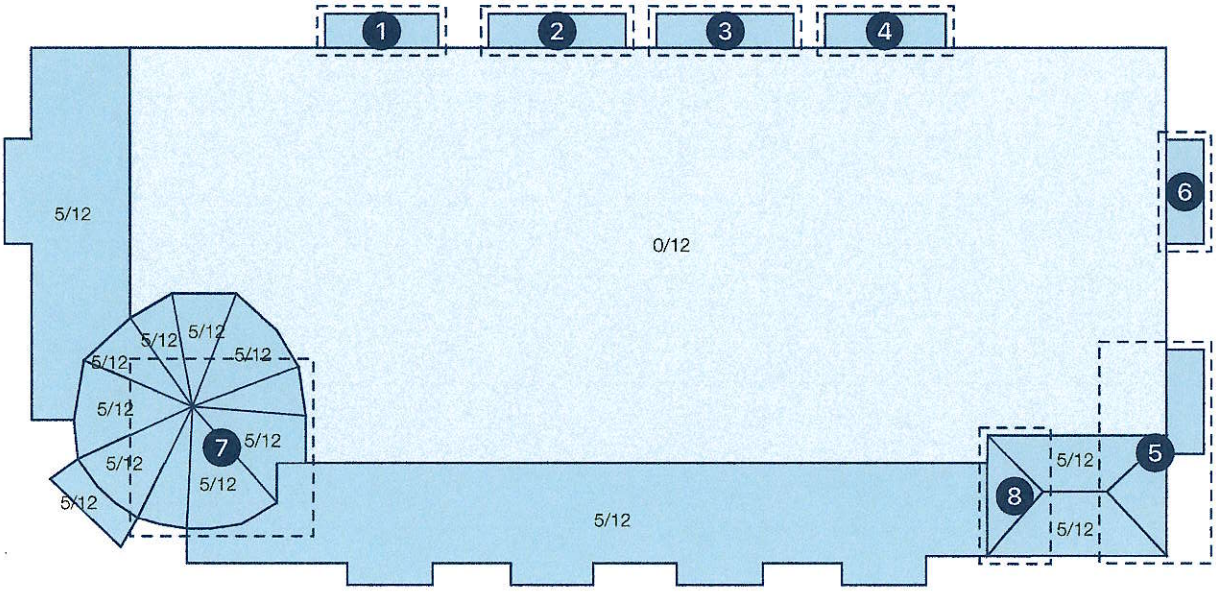

Florida Building Code 7th Edition (2020)
MDC High Velocity Hurricane Zone Application Form

Section D (Steep Sloped Roof System)

Roof System Manufacturer: East Coast Metals Inc.

Product Control Number: 21-1027.03

Minimum Design Wind Pressures, From Applicable RAS 127 Table or Calculations:

Zone1: 74 Zone 2e: 74 Zone2n: 108 Zone 2r: 108 Zone 3e: 108 Zone 3r: 128

Slope Range: ☒ ≥ 2:12 to ≤ 4:12 ○ > 4:12 to ≤ 6:12 ○ > 6:12 to ≤ 12:12

Roof Shape: ○ All Hip Roof ○ Gable Roof

Deck Type: 5/8" CDX Plywood

Underlayment Type: #30 Felt ASTM D-226 Type II

Roof Slope: 3 : 12

Insulation: N/A

Fire Barrier: Versashield

Ridge Ventilation? N/A

Fastener Type & Spacing: 1 1/4 PRS Nails & 1 1/4" Tin caps @ 6" OC on field & 12" OC on laps

Cap Sheet Type: N/A

Cap Sheet Attachment: N/A

Mean Roof Height: 15'

Roof Covering: Englert Serie 1300 24 ga

Drip Edge Type & Size: 3"x3" gabr 24 ga. @ 4" OC with 1 1/4" PRS Nails

Method of Attachment: Clips @ field 24" OC; perimeter 12" OC; corner 12" OC; 2 screws per clip; perimeter width 5'.

ONLINE CERTIFICATIONS DIRECTORY

TGFU.R18970
Roofing Systems

Page Bottom

Roofing Systems

See General Information for Roofing Systems

[illegible] INC
1200 ANDOVER AVE
PERTH AMBOY, NJ 08861-1020 USA

R18970

[illegible] SYSTEMS

Class A

1. Decks C-15/32 or spaced sheathing — Exposure: Unlimited — Impact: 4

Underlayments — One layer "VersaShield Underlayment", mechanically fastened.
Ply Sheets — One layer Type 30 base sheet or "VersaShield", mechanically fastened.
Panels: — — Steel, zinc or copper roofing panels, designated "Series 1000", "Series 1100", "Series 1101", "Series 1300", "Series 1500", "Series 2000" or "Series 2500", mechanically fastened.

2. Decks C-15/32 or spaced sheathing — Exposure: Unlimited — Impact: 4

Underlayments — One or more plies "VersaShield Underlayment", mechanically fastened.
Panels: — Steel, zinc or copper roofing panels, designated "Series 1000", "Series 1100", "Series 1101", "Series 1300", "Series 1500", "Series 2000" or "Series 2500", mechanically fastened.

3. Decks C-15/32 — Exposure: Unlimited — Impact: 4

Barrier Board: — 1/4 in. min. G-P Gypsum DensDeck® with all joints staggered a min of 6 in. from the plywood joints.
Insulation (Optionally) — Fiberglass, polyisocyanurate, perlite or wood fiber, any thickness.
Membrane — Any UL Classified modified bitumen system, BUR system or CPE, CSM, CSPE, EPDM, NBP, PIB, PVC, TPO or TPE membrane system suitable for use with any roof insulation.
Panels: — Steel, zinc or copper roofing panels, designated "Series 1000", "Series 1100", "Series 1101", "Series 1300", "Series 1500", "Series 2000" or "Series 2500", mechanically fastened.

Last Updated on 2014-06-17

Questions? Print this page Terms of Use Page Top

© 2017 UL LLC

The appearance of a company's name or product in this database does not in itself assure that products so identified have been manufactured under UL's Follow-Up Service. Only those products bearing the UL Mark should be considered to be Certified and covered under UL's Follow-Up Service. Always look for the Mark on the product.

UL permits the reproduction of the material contained in the Online Certifications Directory subject to the following conditions: 1. The Guide Information, Assemblies, Constructions, Designs, Systems, and/or Certifications (files) must be presented in their entirety and in a non-misleading manner, without any manipulation of the data (or drawings). 2. The statement "Reprinted from the Online Certifications Directory with permission from UL" must appear adjacent to the extracted material. In addition, the reprinted material must include a copyright notice in the following format: "© 2017 UL LLC".

TYPICAL EAVE TRIM DETAIL

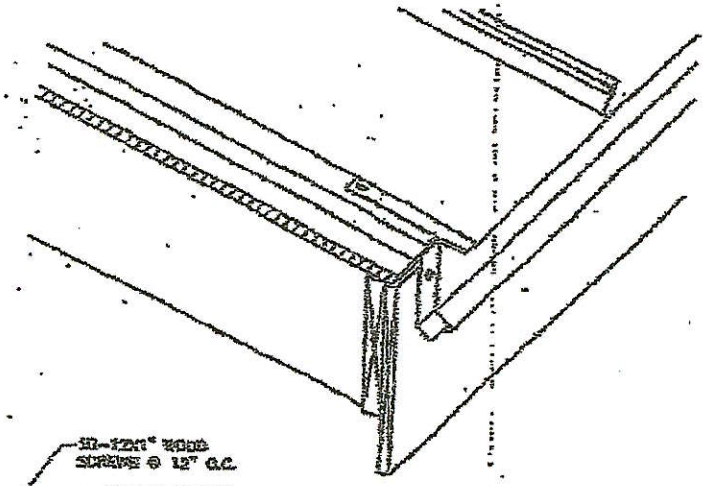

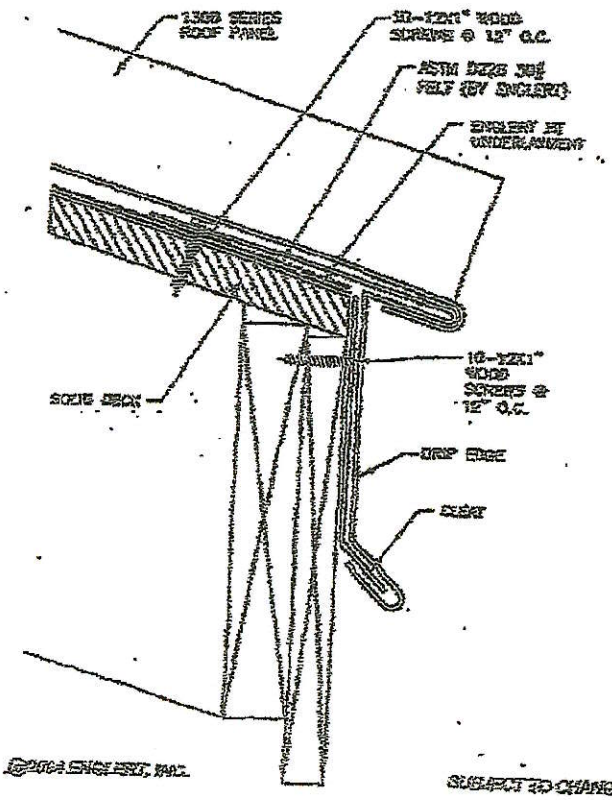

NOTES:

1) INSTALL CLEAT ONTO FASCIA WITH 4#8-40x1" WOOD SCREW, 12" O.C.
2) INSTALL DRIP EDGE BY SLIDING OVER BEND ONTO CLEAT & FASTENING WITH 8#8-40x1" WOOD SCREW, 12" O.C. ONTO SUBSTRATE.
3) ENGAGE DEEP RIBS ON BOTTOM SIDE OF PANEL TO BEGIN PANEL INSTALLATION.

©2004 OWCLERT, INC.

SUBJECT TO CHANGE WITHOUT NOTICE

TYPICAL HIP / RIDGE DETAIL

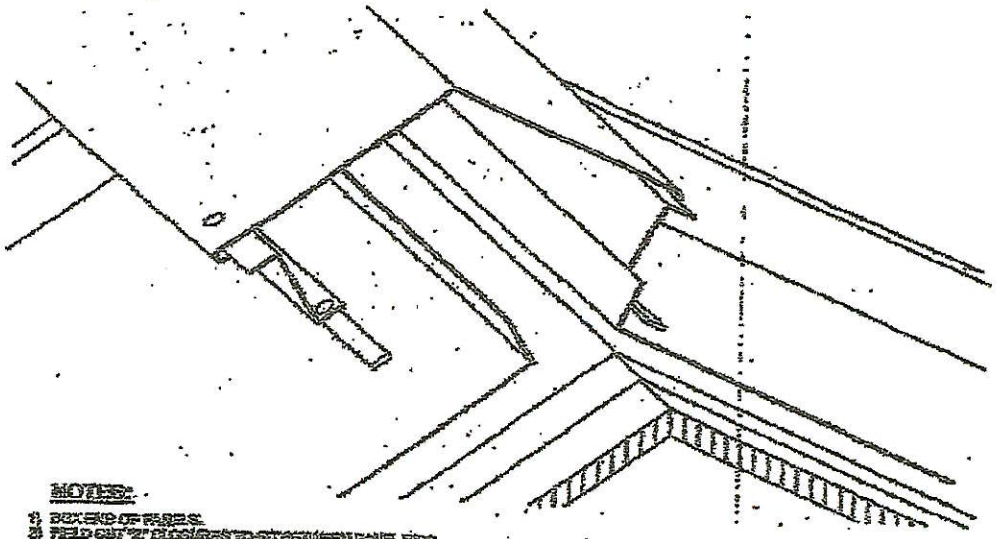

NOTES:

1) BOX END OF PANELS.
2) FIELD CUT "Z" CLOSURES TO FIT BETWEEN PANEL RIBS.
3) SET "Z" CLOSURE IN TAPE SEALANT OR 2 CONT. BEADS OF SEALANT AND ATTACH TO PANEL WITH (3) #14-10x1" WOOD SCREWS.
4) APPLY SEALANT ON SIDE RIBS OF "Z" CLOSURE, FILLING ANY GAPS AROUND PANEL RIBS.
5) ATTACH RIDGE/HIP FLASHING TO "Z" CLOSURES WITH A POP RIVET ON ONE SIDE AT 24" O.C.
6) IF ADDITIONAL FLASHING LENGTHS ARE REQUIRED, APPLY SEALANT AND LAP THE FLASHING OVER THE INSTALLED FLASHING BY A MINIMUM OF 2" ENSURING THE CONNECTION WITH POP RIVETS.

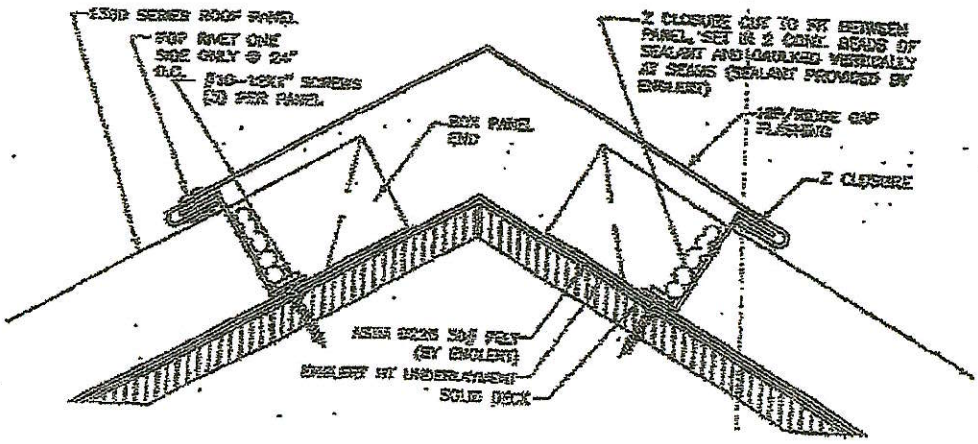

TYPICAL VALLEY DETAIL

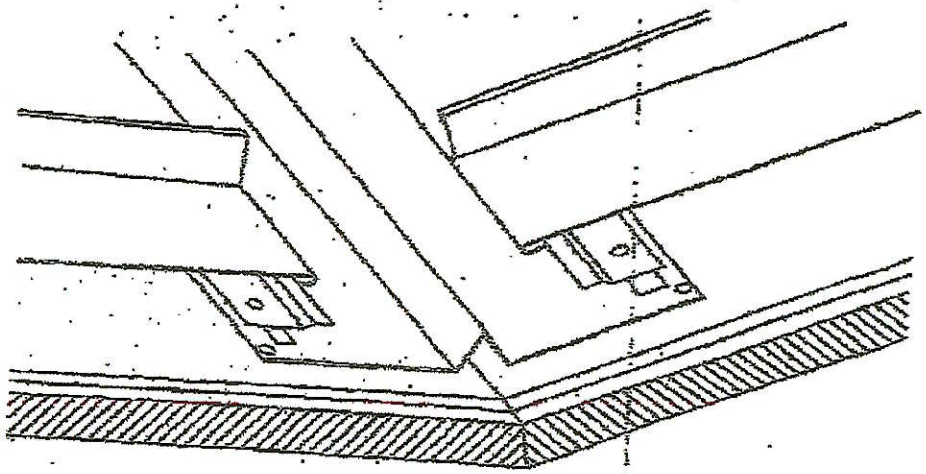

NOTES:

1) INSTALL ALL VALLEY FLASHINGS BEFORE PANEL INSTALLATION
2) FASTEN VALLEY FLASHING TO SUBSTRATE WITH #10-12X1" PANHEAD WOOD SCREWS 24" O.C.
3) ALIGN AND INSTALL OFFSET CLEAT WITH TAPE SEALANT ON BOTH SIDES OF VALLEY FLASHING AT LEAST 6" BACK FROM CENTER OF VALLEY FLASHING.
4) FASTEN OFFSET CLEAT THROUGH VALLEY FLASHING AND TAPE SEALANT TO SUBSTRATE WITH #10-12X3" PANHEAD HEAD WOOD SCREWS 24" O.C.
5) FIELD TRIM PANEL.
6) ENGAGE FIELD TRIMMED END OF PANEL TO OFFSET CLEAT AND ATTACH PANEL AS USUAL.

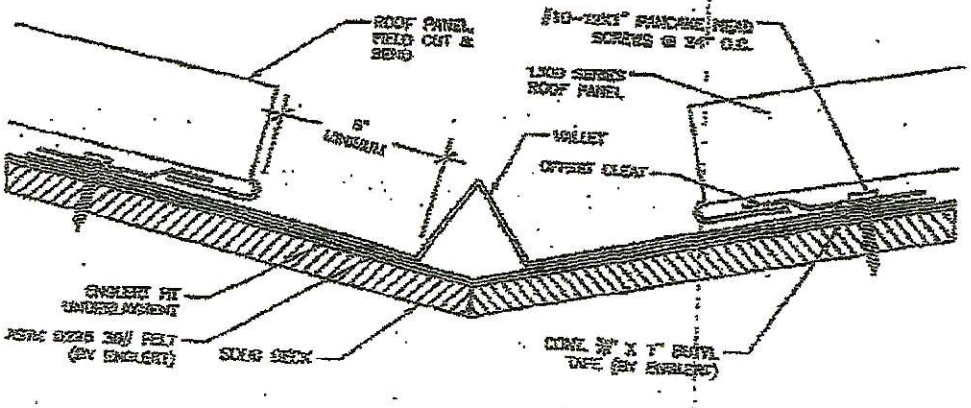

©2004 ENGLERT, INC.

SUBJECT TO CHANGE WITHOUT NOTICE!

TYPICAL HEADWALL DETAIL

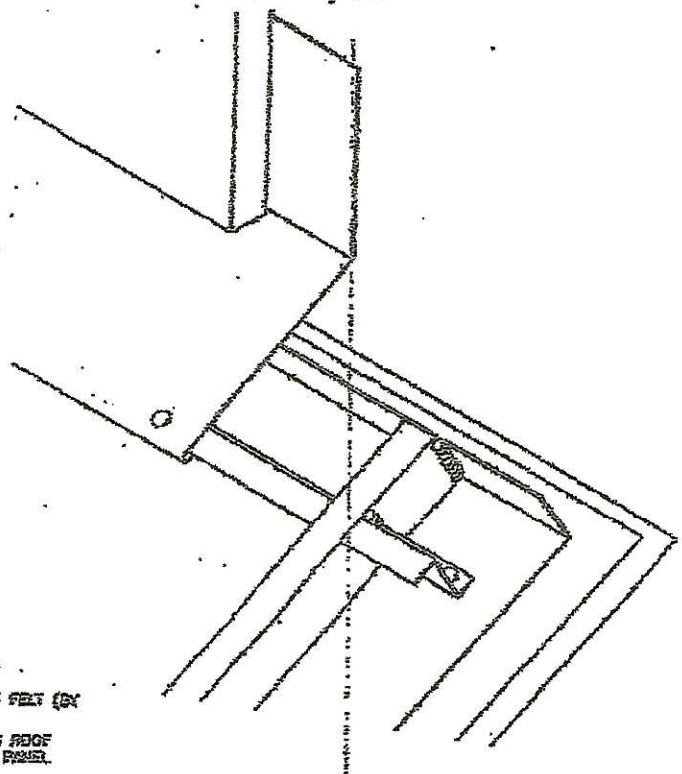

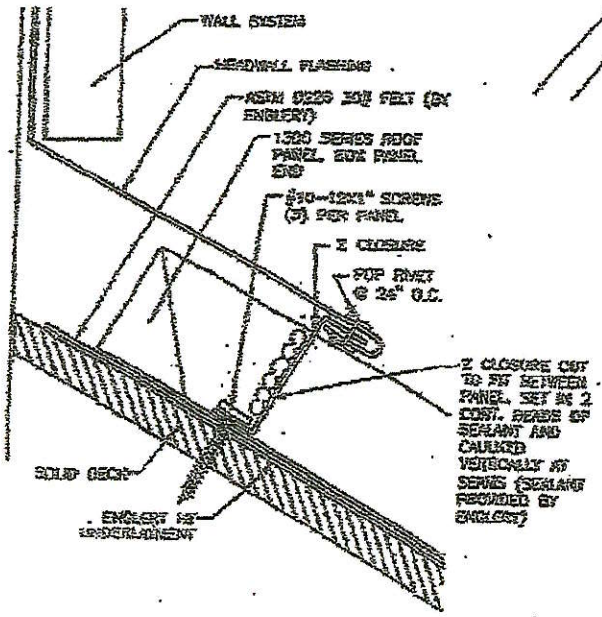

NOTES:

1) BOX PANEL ENDS.
2) FIELD CUT "Z CLOSURES" TO FIT BETWEEN PANEL RIBS.
3) SET "Z" CLOSURE IN TOPS SEALANT OR 2 CONT. BEADS OF SEALANT AND ATTACH TO PANEL WITH [illegible] #10-12x1" HEXED SCREWS.
4) CAULK "Z" CLOSURE VERTICALLY AT PANEL SEAM.
5) ATTACH RIGHT SIDE TRANSITION FLASHING TO "Z" CLOSURE W/ POP RIVETS.

©2004 ENGLERT, INC.

SUBJECT TO CHANGE WITHOUT NOTICE

TYPICAL SIDEWALL DETAIL

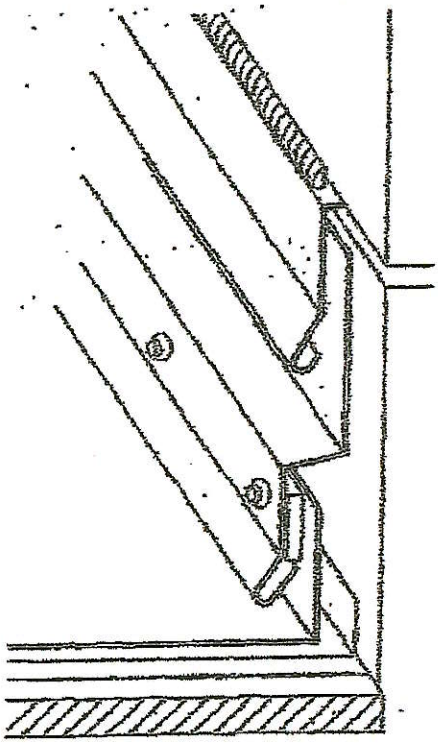

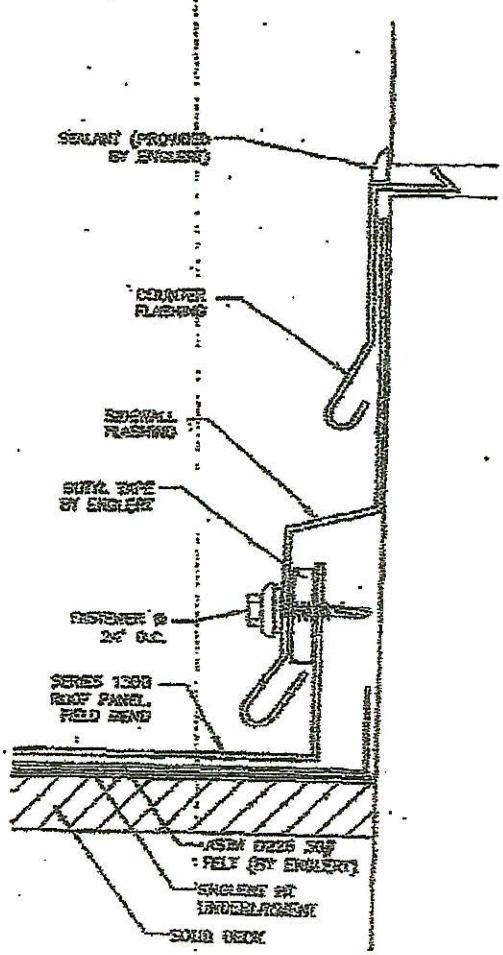

NOTES:

1) APPLY SEALANT TAPE TO INSIDE OF PANEL LEG.
2) ATTACH SIDEWALL FLASHING BY INSTALLER. FASTENER @ 24" O.C. THROUGH SEALANT TAPE AND INTO PANEL.
3) INSTALL COUNTER FLASHING AND SEAL WITH ENGLERT SEALANT.

©2004 ENGLERT, INC.

TYPICAL PENETRATION DETAIL

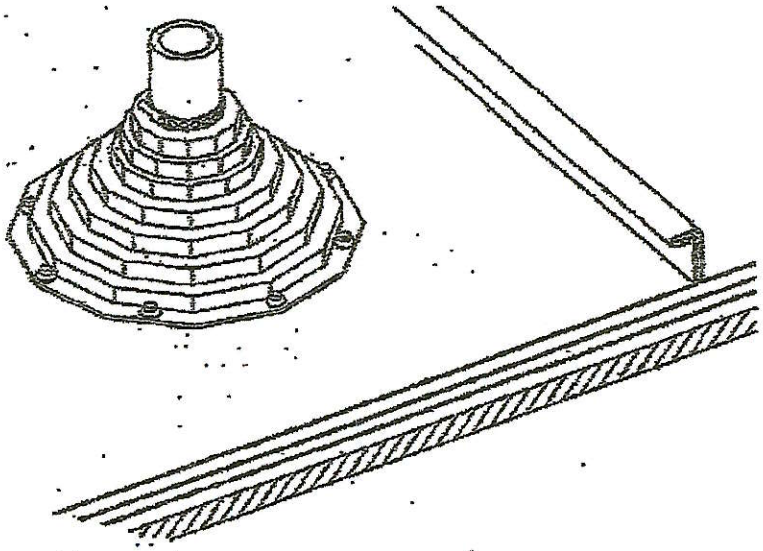

NOTES:

1) THE VENT PIPE MUST BE EXTENDED THROUGH THE FLAT OF THE PANEL.
2) CUT THE PANEL TO FIT THE PIPE PROPERLY.
3) TRIM THE ROOF JACK SO THAT THE PIPE WILL FIT SNUGLY AND INSTALL OVER THE PIPE.
4) APPLY SEALANT BETWEEN THE PANEL AND THE BASE FASTENING RING OF THE ROOF JACK.
5) ATTACK THE BASE OF THE ROOF JACK TO THE PANEL USING #14/#-14X7/8" STITCH XL FASTENERS @ 1" O.C.
6) APPLY SEALANT BETWEEN THE PIPE AND THE TOP OF THE ROOF JACK.
7) INSTALL A STAINLESS STEEL CLAMPING RING SNUGLY AROUND THE TOP OF THE ROOF JACK.

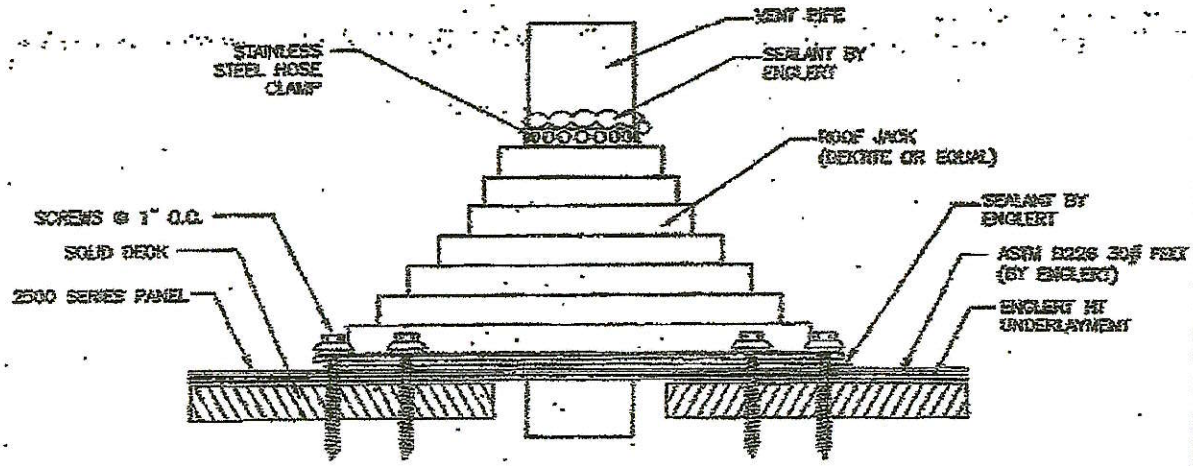

©2004 ENGLERT, INC.

MIAMI-DADE COUNTY
DEPARTMENT OF REGULATORY AND ECONOMIC RESOURCES (RER)
BOARD AND CODE ADMINISTRATION DIVISION

MIAMI-DADE COUNTY
PRODUCT CONTROL SECTION
11805 SW 26 Street, Room 208
Miami, Florida 33175-2474
T (786) 315-2590, F (786) 315-2599
www.miamidade.gov/economy

NOTICE OF ACCEPTANCE (NOA)

East Coast Metals, Inc.
7905 West 20th Avenue
Hialeah, FL 33014

SCOPE:

This NOA is being issued under the applicable rules and regulations governing the use of construction materials. The documentation submitted has been reviewed and accepted by Miami-Dade County RER - Product Control Section to be used in Miami-Dade County and other areas, where allowed by the Authority Having Jurisdiction (AHJ).

This NOA shall not be valid after the expiration date stated below. The Miami-Dade County Product Control Section (In Miami-Dade County) and/or the AHJ (in areas other than Miami-Dade County) reserve the right to have this product or material tested for quality assurance purposes. If this product or material fails to perform in the accepted manner, the manufacturer will incur the expense of such testing and the AHJ may immediately revoke, modify, or suspend the use of such product or material within their jurisdiction. RER reserves the right to revoke this acceptance if it is determined by Miami-Dade County Product Control Section that this product or material fails to meet the requirements of the applicable building code.
This product is approved as described herein and has been designed to comply with the Florida Building Code including the High Velocity Hurricane Zone of the Florida Building Code.

DESCRIPTION: Englert Series 1300 Steel Panel (2 in Clips and 6 in Clips) over Wood Deck

LABELING: Each unit shall bear a permanent label with the manufacturer's name or logo, city, state and following statement: "Miami-Dade County Product Control Approved", unless otherwise noted herein.

RENEWAL of this NOA shall be considered after a renewal application has been filed and there has been no change in the applicable building code negatively affecting the performance of this product.

TERMINATION of this NOA will occur after the expiration date or if there has been a revision or change in the materials, use, and/or manufacture of the product or process. Misuse of this NOA as an endorsement of any product, for sales, advertising or any other purposes shall automatically terminate this NOA. Failure to comply with any section of this NOA shall be cause for termination and removal of NOA.

ADVERTISEMENT: The NOA number preceded by the words Miami-Dade County, Florida, and followed by the expiration date may be displayed in advertising literature. If any portion of the NOA is displayed, then it shall be done in its entirety.

INSPECTION: A copy of this entire NOA shall be provided to the user by the manufacturer or its distributors and shall be available for inspection at the job site at the request of the Building Official.

This NOA renews NOA–No. **17–0703.05** and consists of pages 1 through 5.
The submitted documentation was reviewed by Sifang Zhao, P.E.

11/24/2021

MIAMI-DADE COUNTY APPROVED

ROOFING ASSEMBLY APPROVAL

Category:	Roofing
Sub-Category:	Metal, Panels (Non-Structural)
Materials:	Steel
Deck Type:	Wood
Maximum Design Pressure	**-165.00 psf**

TRADE NAMES OF PRODUCTS MANUFACTURED OR LABELED BY APPLICANT:

Product	Dimensions	Test Specifications	Product Description
Series 1300	Length: various Width: 16" Thickness 0.024" (24ga) Min. Yield Strength: 57 ksi.	TAS 125	Corrosion resistant, galvalume, preformed, standing seam. Coated, pre-finished, metal panels.
2" Clip	Length: 2" Width: 1" Height:1-9/16" Thickness 0.020"	TAS 125	Corrosion resistant, galvalume, preformed, coated, pre-finished, metal clips for use in Field or Perimeter and Corner Area of Roof.
6" Clip	Length: 6 ¼" Width: 1" Height: 1.65" Thickness 0.0276	TAS 125	Corrosion resistant, galvalume, preformed, coated, pre-finished, metal clips for use in Perimeter and Corner Areas of Roof.
Trim Pieces	Length: varies Width: varies Thickness 0.0276".	N/A	Corrosion resistant, galvalume, preformed, coated, pre-finished, trim pieces.

EVIDENCE SUBMITTED:

Test Agency	Test Identifier	Test Name/Report	Date
Morton International	AS-0286-91L	Salt Spray ASTM B 117	Feb. 1986
	AS-0286-91T	Accelerated Weathering ASTM G 23	Feb. 1986
Architectural Testing Inc.	01-32797.01 01-32797.03	TAS 100 ASTM E 8	Nov. 1998 Nov. 1998
Hurricane Test Laboratory, LLC.	0155-0615-05	TAS 125	Feb. 2006
Architectural Testing	92270.01-109-18	TAS 125	October. 2009
Intertek	G5733.01-106-18	TAS 114 App G	01/05/17

APPROVED ASSEMBLIES:

System A-1:	Series 1300 Panel 16" Wide
Deck Type:	Wood, Non-Insulated
Deck Description:	New Construction $^{19}/_{32}$" or greater plywood or wood plank.
Slope Range:	2": 12" or greater (1":12" effective w/2020 FBC 7th Edition)
Maximum Uplift Pressure:	**See Table A below**

Deck Attachment: In accordance with applicable building code, but in no case shall it be less than # 8d annular ring shank nails spaced 6" o.c. In reroofing, where the deck is less than $^{19}/_{32}$" thick (Minimum $^{15}/_{32}$") the above attachment method must be in addition to existing attachment.

Underlayment: Minimum underlayment shall be an ASTM D 226 Type II installed with a minimum 4" side-lap and 6" end-laps. Underlayment shall be fastened with corrosion resistant tin-caps and 12 gauge 1 ¼" annular ring-shank nails, spaced 6" o.c. at all laps and two staggered rows 12" o.c. in the field of the roll. Or, any approved underlayment having a current NOA.

Fire Barrier Board: Any approved fire barrier having a current NOA. Refer to a current fire directory listing for fire ratings of this roofing system assembly as well as the location of the fire barrier within the assembly. See Limitation # 1.

Valleys: Valley construction shall be in compliance with Roofing Application Standard RAS 133 and with Englert's current published installation instructions.

Metal Panels and Accessories: Install the "Series 1300 Panel" and accessories in compliance with the current published installation instructions and details in Englert's Installation Manual. Flashings, penetrations, valley construction and other details shall be constructed in compliance with Roofing Application Standard RAS 133.

Panels shall be installed with approved Panel Clips located at each panel rib side lap spaced at a maximum, listed in **Table A** below, parallel to roof slope, fastened with #10 wafer head spoiler tip corrosion resistant screws of sufficient length to penetrate through the sheathing a minimum $^{3}/_{16}$ of an inch. Use 2 screws for the 2" clip and use 4 screws for the 6" clip.

Standing seams shall be mechanically seamed to a 90° degree seam, (single lock).

TABLE A
MAXIMUM DESIGN PRESSURES

Roof Areas	Field	Perimeter and Corner[1]	Perimeter and Corner[1,2]
Maximum Design Pressures	**–69.25 psf**	**–106.75 psf**	**–165.00 psf**
Maximum Clip Spacing	**24" o.c.**	**12" o.c.**	**12" o.c.**
Clip Size	**2" Clip**	**2" Clip**	**6" Clip**

1. Extrapolation shall not be allowed
2. Place a bead of Bostik 70-05A sealant in the lateral seams prior to seaming.

SYSTEM LIMITATIONS

1. Fire classification is not part of this acceptance; refer to a current Approved Roofing Materials Directory for fire ratings of this product.
2. The maximum designed pressure listed herein shall be applicable to all roof pressure zones (i.e., field, perimeters, and corners). Neither rational analysis, nor extrapolation shall be permitted for enhanced fastening at enhanced pressure zones (i.e., perimeters, extended corners and corners).
3. Panels may be rolls formed in continuous lengths from eave to ridge. Maximum lengths shall be as described in Roofing Application Standard RAS 133
4. All panels shall be permanently labeled with the manufacturer's name and/or logo, and the following statement: "Miami-Dade County Product Control Approved" **or** with the Miami-Dade County Product Control Seal as seen below. All clips shall be permanently labeled with the manufacturer's name and/or logo, and/or model.

MIAMI-DADE COUNTY
APPROVED

5. All products listed herein shall have a quality assurance audit in accordance with the Florida Building Code and Rule **61G20-3** of the Florida Administrative Code.
6. Panels may be jobsite roll formed with machine model #('s) **04.17.02 and 06.10.03** from Englert Rollformed Products Association.

PROFILE DRAWINGS

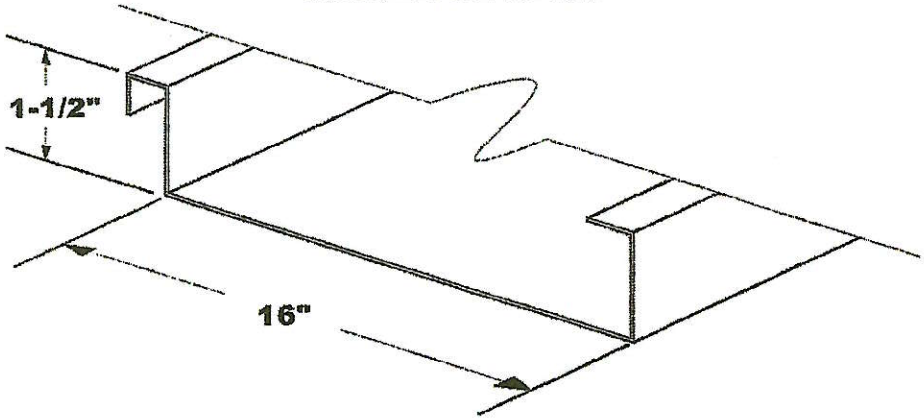

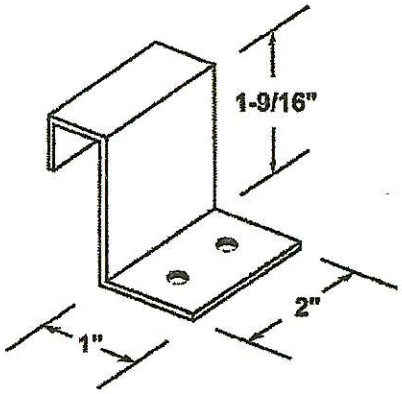

2" CLIP DETAIL
(FIELD AND PERIMETER AND CORNER OPTION)

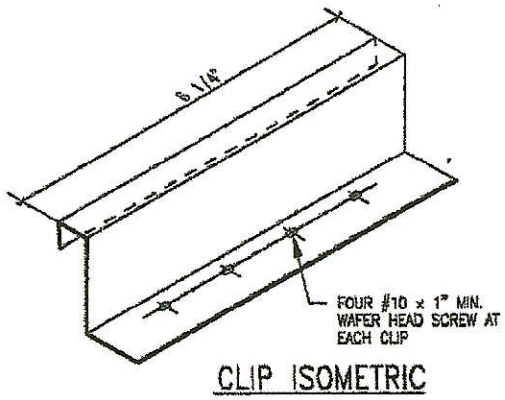

(PERIMETER AND CORNER OPTION)

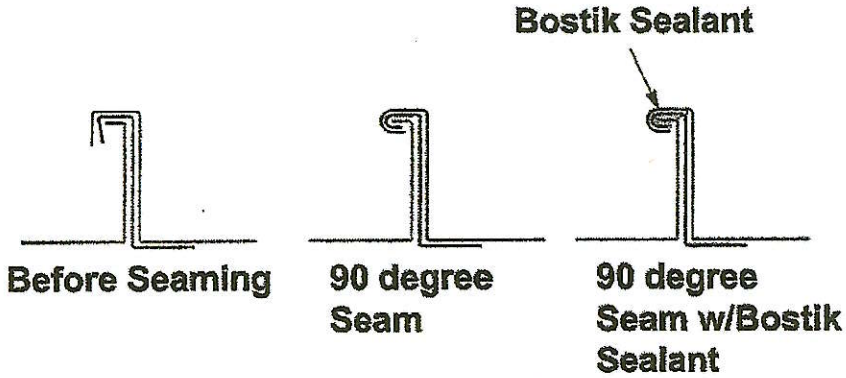

SERIES 1300 PANEL SYSTEM

END OF THIS ACCEPTANCE

MIAMI-DADE COUNTY
PRODUCT CONTROL SECTION
11805 SW 26 Street, Room 208
Miami, Florida 33175-2474
T (786)315-2590 F (786) 315-2599
www.miamidade.gov/economy

DEPARTMENT OF REGULATORY AND ECONOMIC RESOURCES (RER)
BOARD AND CODE ADMINISTRATION DIVISION

NOTICE OF ACCEPTANCE (NOA)

GAF
1 Campus Drive
Parsippany, NJ 07054

SCOPE:

This NOA is being issued under the applicable rules and regulations governing the use of construction materials. The documentation submitted has been reviewed and accepted by Miami-Dade County RER -Product Control Section to be used in Miami Dade County and other areas where allowed by the Authority Having Jurisdiction (AHJ).

This NOA shall not be valid after the expiration date stated below. The Miami-Dade County Product Control Section (In Miami Dade County) and/or the AHJ (in areas other than Miami Dade County) reserve the right to have this product or material tested for quality assurance purposes. If this product or material fails to perform in the accepted manner, the manufacturer will incur the expense of such testing and the AHJ may immediately revoke, modify, or suspend the use of such product or material within their jurisdiction. RER reserves the right to revoke this acceptance if it is determined by Miami-Dade County Product Control Section that this product or material fails to meet the requirements of the applicable building code.

This product is approved as described herein and has been designed to comply with the Florida Building Code including the High Velocity Hurricane Zone of the Florida Building Code.

DESCRIPTION: VersaShield® Fire-Resistant Roof Deck Protection and VersaShield® Solo™ Fire-Resistant Slip Sheet

LABELING: Each unit shall bear a permanent label with the manufacturer's name or logo, city, state and following statement: "Miami-Dade County Product Control Approved", unless otherwise noted herein.

RENEWAL of this NOA shall be considered after a renewal application has been filed and there has been no change in the applicable building code negatively affecting the performance of this product.

TERMINATION of this NOA will occur after the expiration date or if there has been a revision or change in the materials, use, and/or manufacture of the product or process. Misuse of this NOA as an endorsement of any product, for sales, advertising or any other purposes shall automatically terminate this NOA. Failure to comply with any section of this NOA shall be cause for termination and removal of NOA.

ADVERTISEMENT: The NOA number preceded by the words Miami-Dade County, Florida, and followed by the expiration date may be displayed in advertising literature. If any portion of the NOA is displayed, then it shall be done in its entirety.

INSPECTION: A copy of this entire NOA shall be provided to the user by the manufacturer or its distributors and shall be available for inspection at the job site at the request of the Building Official.

This NOA renews and revises NOA No. 16-1216.02 and consists of pages 1 through 3.
The submitted documentation was reviewed by Jorge L. Acebo.

ROOFING COMPONENT APPROVAL

Category:	Roofing
Sub-Category:	Underlayment
Material:	Fiberglass

SCOPE:

This acceptance is for **VersaShield® Fire-Resistant Roof Deck Protection** (a.k.a "VersaShield® Underlayment") and **VersaShield® Solo™ Fire-Resistant Slip Sheet** (a.k.a "VersaShield Solo™"), as described in this Notice of Acceptance, for use with approved prepared roof assemblies. Designed to comply with the Florida Building Code and the High Velocity Hurricane Zone of the Florida Building Code.

PRODUCT DESCRIPTION:

Manufactured by Applicant	Dimensions	Test Specifications	Product Description
VersaShield® Fire-Resistant Roof Deck Protection	42" x 100' rolls	ASTM D 226 Type II	Non-Asphaltic fiberglass-based underlayment and/or fire barrier.
VersaShield® Solo™ Fire-Resistant Slip Sheet	72" x 166.7' rolls 36" x 166.7' rolls	UL790	Non-Asphaltic fiberglass-based slip sheet and/or fire barrier.

MANUFACTURING LOCATION:

1. Conover, NC

EVIDENCE SUBMITTED:

Test Agency	Test Identifier	Test Name/Report	Date
PRI Construction Materials Technologies	PRI 376T0192	ASTM D 226	09/16/21
	GAF-748-02-01	ASTM D 226	12/12/16
	ELK-063-02-01	TAS 100	09/27/01
UL LLC	R10689	UL790	04/30/21
	R1306	UL790	11/23/21

INSTALLATION:

1. VersaShield® Fire-Resistant Roof Deck Protection or VersaShield® Solo™ Fire-Resistant Slip Sheet shall be installed in strict compliance with applicable Building Code.
2. VersaShield® Fire-Resistant Roof Deck Protection or VersaShield® Solo™ Fire-Resistant Slip Sheet shall be installed with a minimum 4-inch head lap in a shingle layer fashion.
3. VersaShield® Fire-Resistant Roof Deck Protection shall be mechanically fastened with approved fasteners in compliance with Florida Building Code 1518.2 when used in lieu of a code prescribed ASTM D 226 Type II underlayment.

LIMITATIONS:

1. Fire classification is not part of this acceptance, refer to a current Approved Roofing Materials Directory for fire ratings of this product
2. This acceptance is for prepared roofing applications. Minimum deck requirements shall be in compliance with applicable building code.
3. VersaShield® Fire-Resistant Roof Deck Protection shall not be left exposed as a temporary roof for longer than 30 days of application. VersaShield® Solo™ Fire-Resistant Slip Sheet shall not be left exposed to the weather.
4. VersaShield® Fire-Resistant Roof Deck Protection and VersaShield® Solo™ Fire-Resistant Slip Sheet are a component used in roof assemblies. Roof assemblies are approved under specific assembly Notice of Acceptance.
5. VersaShield® Fire-Resistant Roof Deck Protection or VersaShield® Solo™ Fire-Resistant Slip Sheet may be used with any approved roof covering Notice of Acceptance listing. VersaShield® Fire-Resistant Roof Deck Protection or VersaShield® Solo™ Fire-Resistant Slip Sheet may be used as a component part of an assembly in the Notice of Acceptance. If VersaShield® Fire-Resistant Roof Deck Protection or VersaShield® Solo™ Fire-Resistant Slip Sheet is not listed, a request may be made to the Authority Having Jurisdiction (AHJ) or the Miami-Dade County Product Control Department for approval provided that appropriate documentation is provided to detail compatibility of the products, wind uplift resistance, and fire testing results.
6. VersaShield® Fire-Resistant Roof Deck Protection and VersaShield® Solo™ Fire-Resistant Slip Sheet are a non-asphaltic underlayment that may be used as a fire barrier for prepared roof assemblies. For fire classification of specific roof assemblies using VersaShield® Fire-Resistant Roof Deck Protection or VersaShield® Solo™ Fire-Resistant Slip Sheet refer to a current Approved Roofing Materials Directory for fire ratings of this product.
7. All products listed herein shall have a quality assurance audit in accordance with the Florida Building Code and Rule 61G20-3 of the Florida Administrative Code.

LABELING:

All membranes or packaging shall bear the imprint or identifiable marking of the manufacturer's name or logo, city and state of manufacturing facility, yellow line to identify the ASTM Standard designation or logo, and the following statement: "Miami-Dade County Product Control Approved" or the Miami-Dade County Product Control Seal as shown below.

MIAMI-DADE COUNTY
APPROVED

BUILDING PERMIT REQUIREMENTS:

Application for building permit shall be accompanied by copies of the following:

1. This Notice of Acceptance.
2. Any other documents required by Building Official or Applicable building code in order to properly evaluate the installation of this material.

END OF THIS ACCEPTANCE