PERMIT #	COMP_TYPE	SUB_TYPE	APPLIED	APPROVED	EXPIRED
BMS40015	BMISC	OTH	05-Oct-93	05-Oct-93	
BS910027	BSBUILD	OTH	04-Oct-90	04-Oct-90	02-Apr-91
BS930411	BSBUILD	OTH	25-Nov-92	25-Nov-92	14-Sep-94

STATUS
CLOSED
CLOSED
FINAL

DESCRIPTION
EXTENSION BLDG PERMIT FEE-BS930411
900 SQ FT. STMPD CNCRT DRVWY
REMOVE ROOF TO DECK (TILE) SEE COMM

STREET_NO	TREET_DIRECTIO	STREET_NAME	PARCEL_NO
39		LA GORCE CR	32100030310
39		LA GORCE CR	32100030310
39		LA GORCE CR	32100030310

Permit Number	Main Address
PLR1700696	39 LA GORCE CIR
BR0616-0226	39 LA GORCE CIR
PO-R1016-0067	39 LA GORCE CIR
PLR1700676	39 LA GORCE CIR

Permit Type	Permit Status
Plumbing - Residential	Finaled
Building - Residential	Finaled
Pool - Residential	Finaled
Plumbing - Residential	Finaled

Work Class	Project Name
Alteration	
Alteration (w/o Phased)	
Alteration	
Alteration	

Apply Date	Issue Date	Expire Date
05/30/2017	05/30/2017	01/16/2018
06/24/2016	06/27/2016	01/17/2018
10/03/2016	10/03/2016	07/19/2017
05/16/2017	05/16/2017	01/16/2018

Finalize Date	Inspection Date	Square Feet
07/18/2017	07/17/2017	0.00
07/24/2017	07/21/2017	2,000.00
01/20/2017	01/20/2017	850.00
07/18/2017	07/17/2017	0.00
		2,850.00

Valuation	Description	Street Number
2,500.00	plr1700676 connect gas to stove	39
60,000.00	Remove and reset kitchen cabinets,	39
12,000.00	RESURFACE EXISTING SWIMMING P	39
2,500.00	BR0616-0226-- Remove and Reset k	39
77,000.00		

Street Name
LA GORCE CIR
LA GORCE CIR
LA GORCE CIR
LA GORCE CIR

PO-R1016-0067

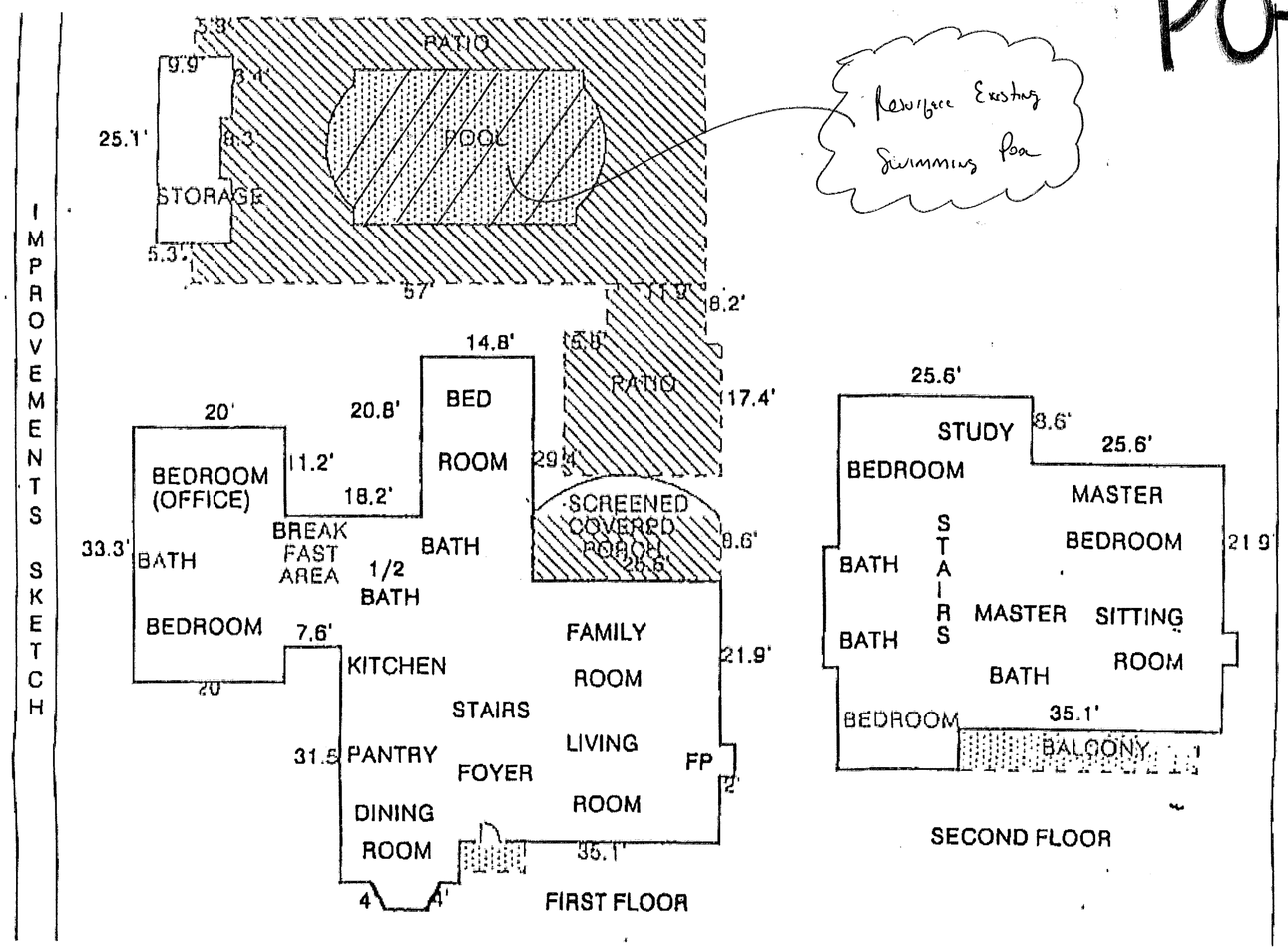

Rewire Existing Swimming Pool

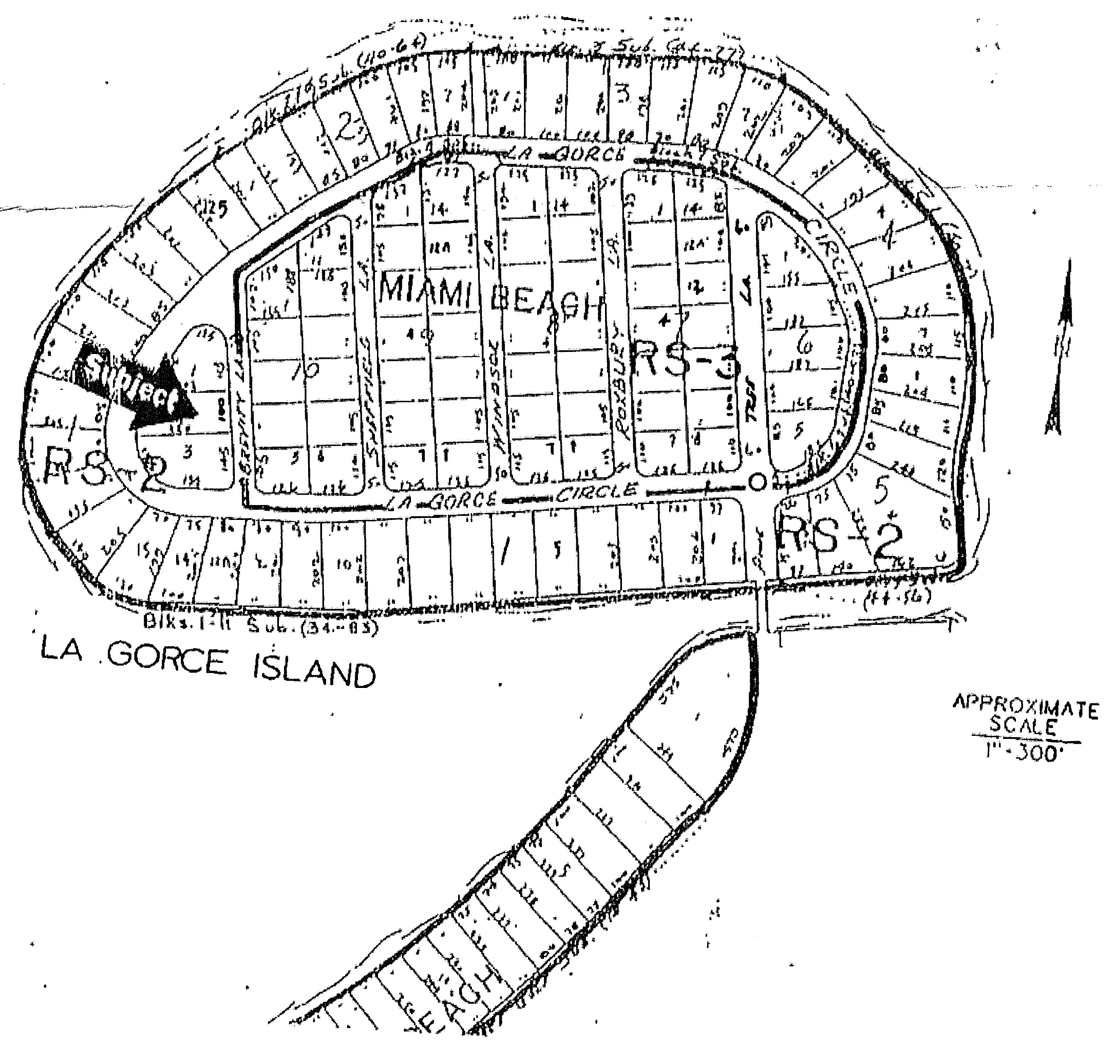

NOTICE: In addition to the requirement of this permit, there may be additional restrictions applicable to this property that may be found in the Public Records of this County and there may be additional permits required from other governmental entities such as water management's districts, state agencies or federal agencies.

The City of Miami Beach assumes no responsibility for accuracy of or results from these plans which are approved subject to compliance with all Federal, State, and Local Laws, Rules, and Regulations.

OFFICE COPY
CITY OF MIAMI BEACH
APPROVED FOR PERMIT BY
THE FOLLOWING:

BUILDING: 10/3/16
ZONING: 10/3/16
PLUMBING:
ELECTRICAL:
MECHANICAL:
FIRE PREVENTION:
FLOOD:
PUBLIC WORKS:
STRUCTURAL:
ELEVATOR:
ROOFING:

39 LaGorce Ix.
Miami Beach

PO-R1016-0067

39 LA GORCE CIR

BR06116-0226

Florida Building Code, Plumbing section 402 and Residential section P2701.1.
The provisions of the Florida Building Code, Plumbing and Residential sections, shall apply to all Plumbing fixtures, faucets and fixture fittings and shall be constructed of *approved* materials, shall have smooth impervious surfaces, **and shall conform to the standards cited in the Code.**

TAMA RAM RESIDENCE

39 LA GORCE CIRCLE
MIAMI BEACH, FL. 33139

CODE IN EFFECT IS FLORIDA BUILDING CODE EXISTING 2014.
NO ELECTRICAL WORK.
REMOVE AND RESET KITCHEN CABINETS, APPLIANCES AND SINKS.
REMOVE AND RESET TOILETS AND SINKS IN BATHROOMS.
RESTORE EXISTING WOOD FLOORS.
INSTALL NEW TILE OVER EXISTING TILE FLOORS.
PAINT INTERIOR AND EXTERIOR OF THE HOUSE WHITE.

LOWER LEVEL

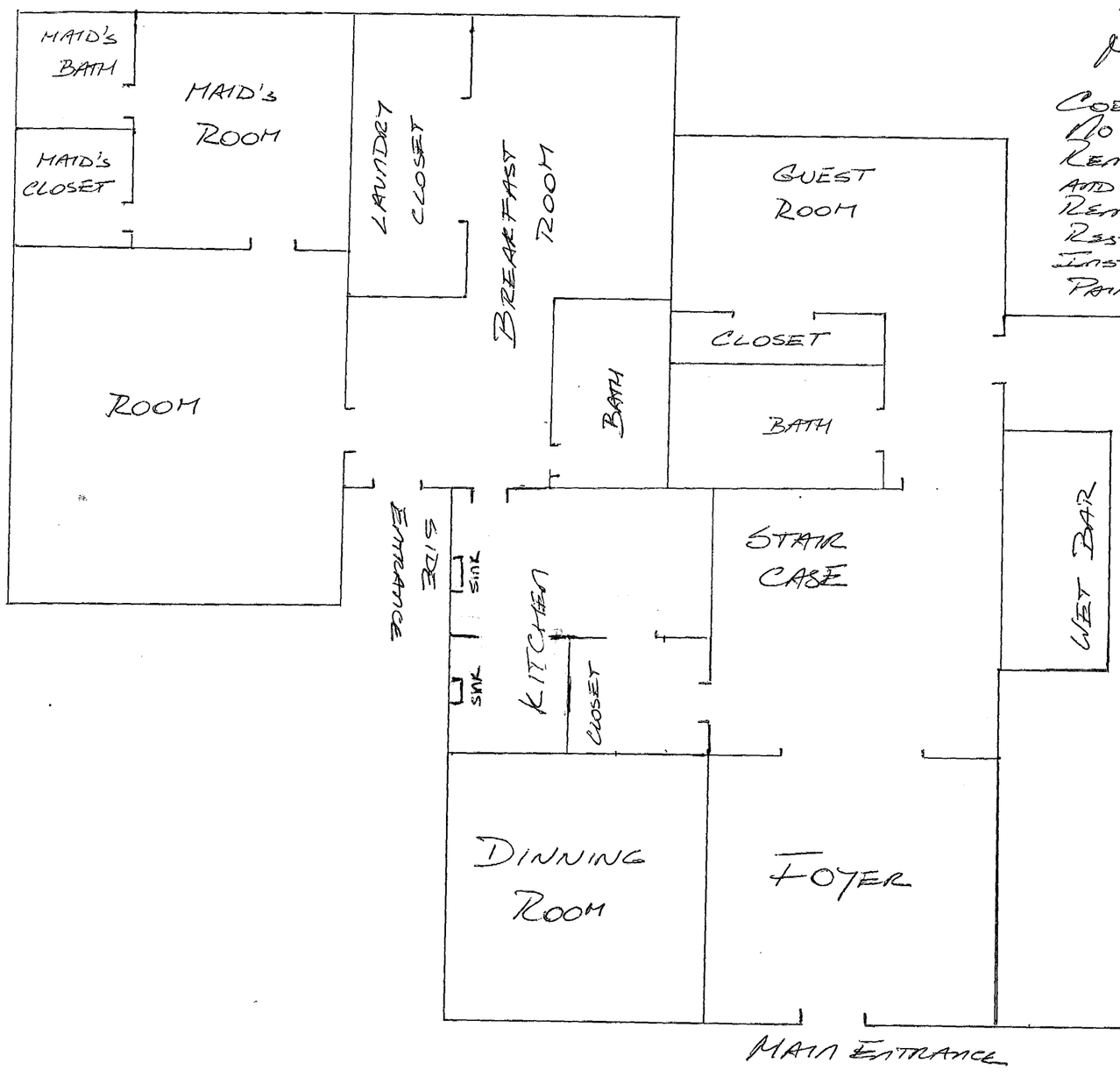

LIVING ROOM

OFFICE COPY
CITY OF MIAMI BEACH
APPROVED FOR PERMIT BY THE FOLLOWING:

BUILDING:	
PLANNING:	6/24/16
PLUMBING:	6-24-16
ELECTRICAL:	6/24/16
MECHANICAL:	6/24/16 (NA)
FIRE PREVENTION:	
FLOOD:	
PUBLIC WORKS:	6/24/16
STRUCTURAL:	
ELEVATOR:	
ROOFING:	

NOTICE: In addition to the requirement of this permit, there may be additional restrictions applicable to this property that may be found in the Public Records of this County and there may be additional permits required from other government entities such as water management's districts, state agencies, or federal agencies.
The city of Miami Beach assumes no responsibility for accuracy of or results from these plans which are approved subject to compliance with all Federal, State, and Local Laws, Rules, and Regulations.

Florida Building Code, Plumbing section 402 and Residential section P2701.1.
The provisions of the Florida Building Code, Plumbing and Residential sections, shall apply to all Plumbing fixtures, faucets and fixture fittings and shall be constructed of *approved* materials, shall have smooth impervious surfaces, **and shall conform to the standards cited in the Code.**

UPPER LEVEL

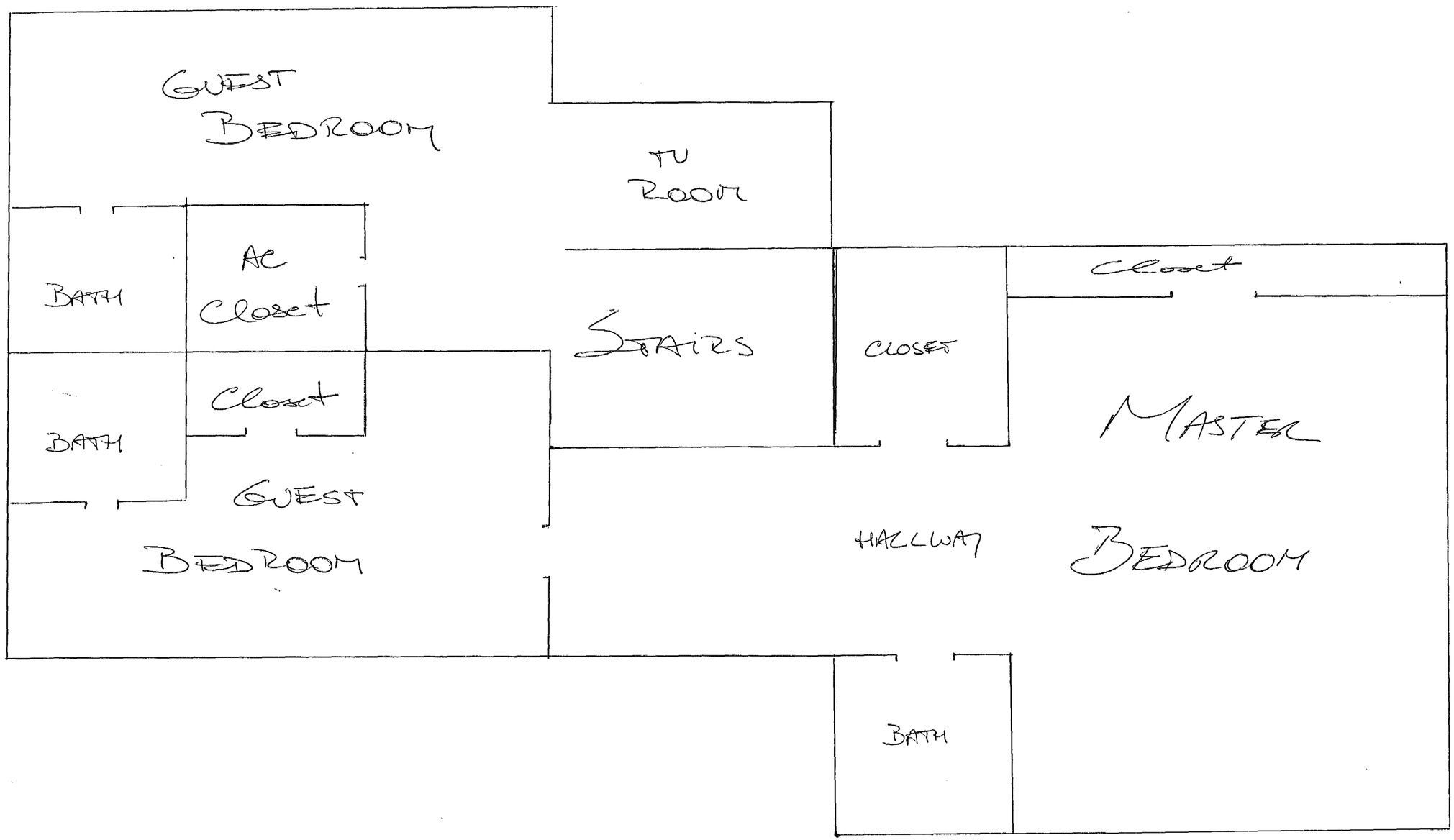

BR06116-0226

39 La Gorce Circle

OFFICE COPY
CITY OF MIAMI BEACH
APPROVED FOR PERMIT BY
THE FOLLOWING:

BUILDING:
ZONING:
PLUMBING:
ELECTRICAL: DG 6/24/16 (NA)
MECHANICAL:
FIRE PREVENTION:
FLOOD:
PUBLIC WORKS:
STRUCTURAL:
ELEVATOR:
ROOFING:

IANNA RAIM RESIDENCE

39 LA GORCE CIRCLE
MIAMI BEACH, FL. 33139

Code in Effect is Florida Building Code Existing 2014.
No Electrical work.
Remove and reset kitchen cabinets, appliances and sinks.
Remove and reset toilets and sinks in bathrooms.
Restore existing wood floors.
Install new tile over existing tile floors.
Paint interior and exterior of the house white.

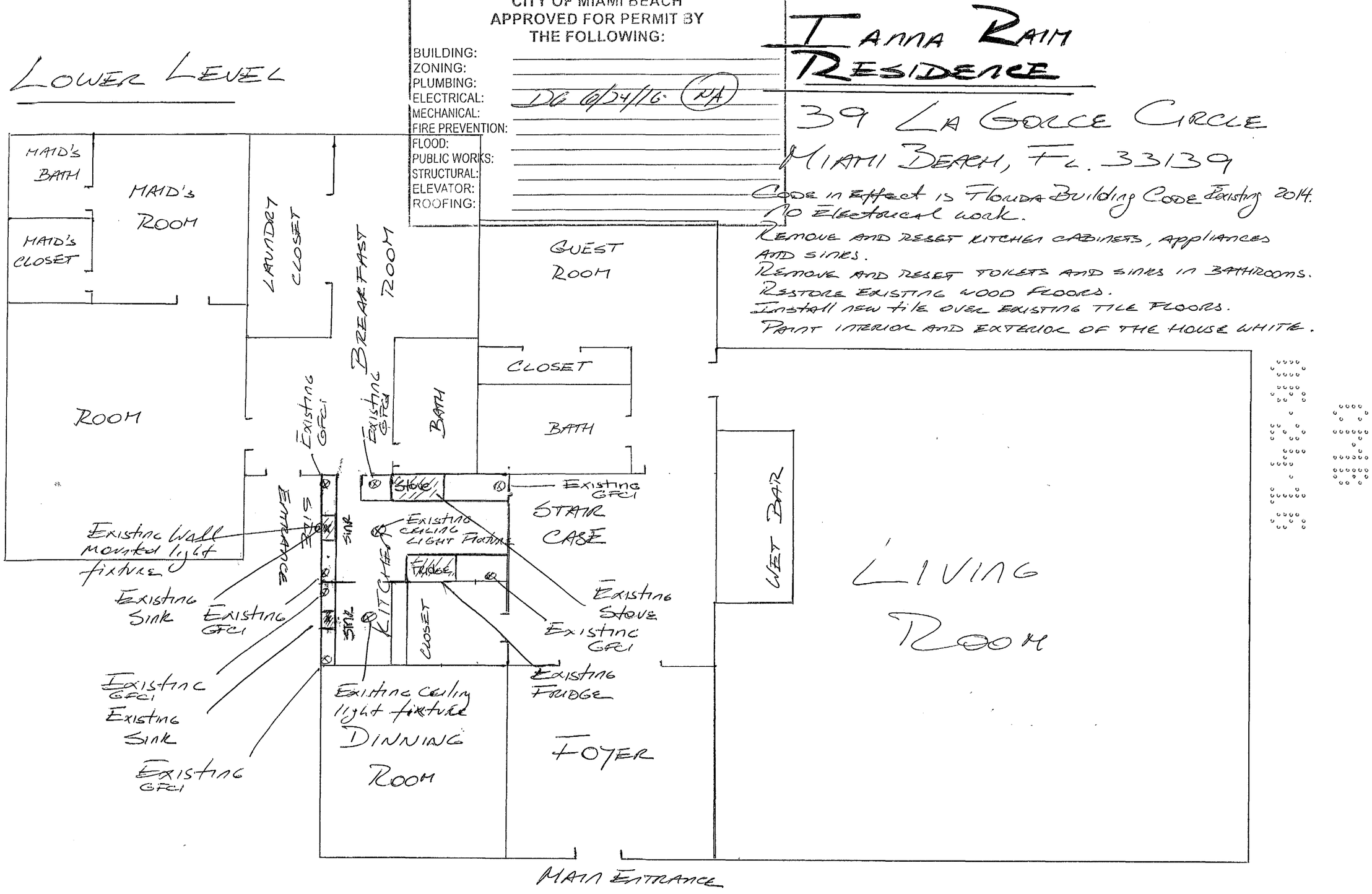

UPPER LEVEL

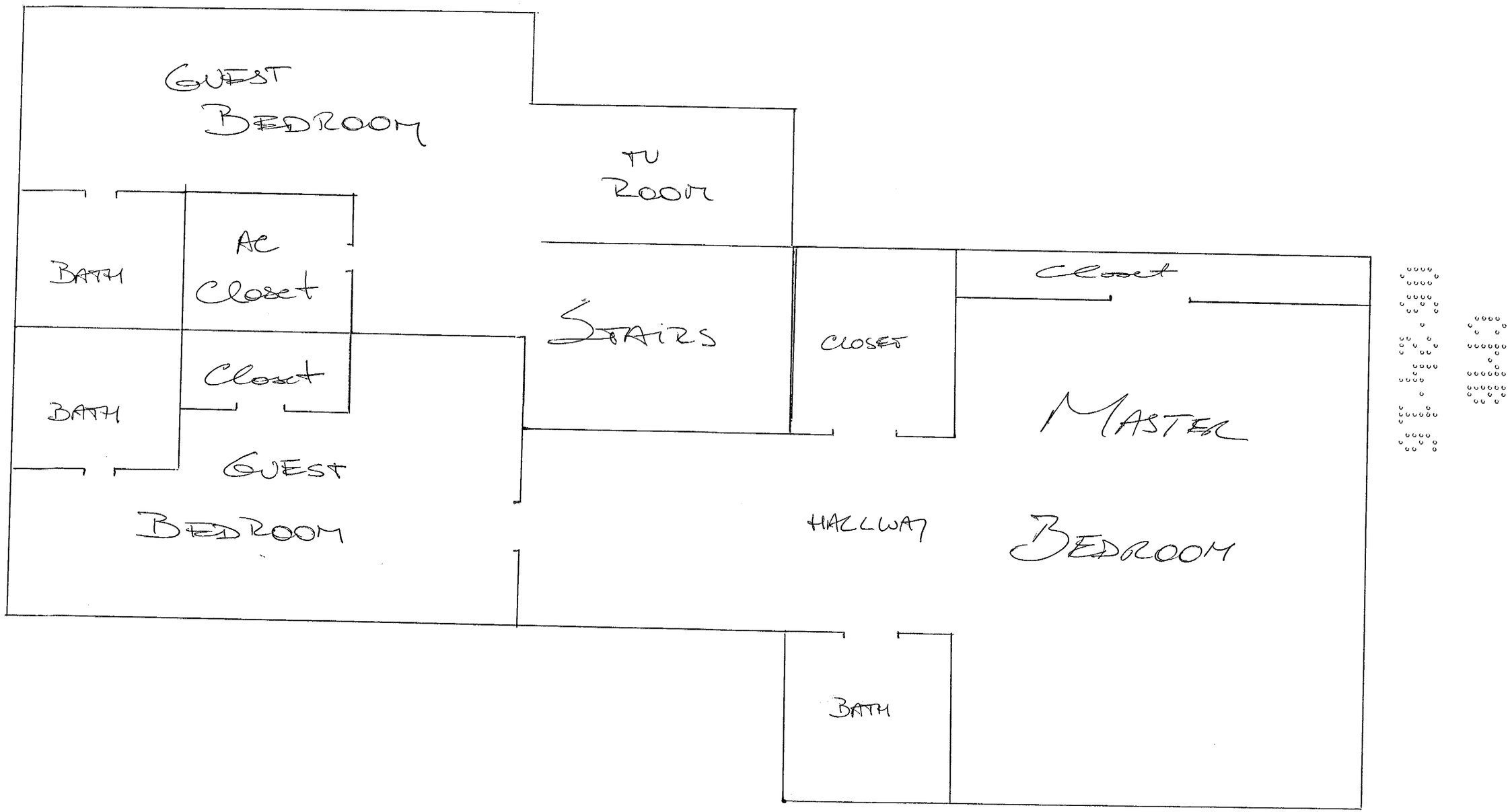
GUEST BEDROOM
TV ROOM
BATH
AC Closet
Closet
BATH
GUEST BEDROOM
STAIRS
CLOSET
Closet
MASTER BEDROOM
HALLWAY
BATH

BR0616-0224

39 La Gorce Circle

PERMIT #	COMP_TYPE	SUB_TYPE	APPLIED	APPROVED	EXPIRED
BMS31051	BMISC	OTH	07-Apr-93	07-Apr-93	
BMS61593	BMISC	OTH	24-Sep-96	24-Sep-96	
B0902912	BSBUILD	ROOFING	07-May-09	20-May-09	24-Feb-10
B9602581	BSBUILD	OTH	02-Jul-96	02-Jul-96	01-Jan-97

STATUS
CLOSED
CLOSED
FINAL
FINAL

DESCRIPTION
RSRCH FEES:40,41,42,43,44,45 LA GORCE CR
2 MICROFILM COPIES
COMPLETE REROOF TILE TO TILE 5,700 SQ/FT
REROOF BUR TO GAF 250 S/F

STREET_NO	TREET_DIRECTIO	STREET_NAME	PARCEL_NO
41		LA GORCE CR	32100030300
41		LA GORCE CR	32100030300
41		LA GORCE CR	32100030300
41		LA GORCE CR	32100030300

CITY OF MIAMI BEACH **B0902912 APP**
Building Department
1700 Convention Ctr Drive, 2nd Floor
Miami Beach, Florida 33139
Inspections: (305) 673-7370
Office: (305) 673-7610

Bldg Small Work Permit

05-20-2009

Activity Number: B0902912

Status: APPROVED
Issued By: BUILRODR

Site Address: 41 LA GORCE CR MBCH
Parcel #: 32100030300

Applied: 05/07/2009
Approved: 05/20/2009
Completed:
To Expire: 11/16/2009

Valuation: $39,300.00

Applicant: UNIVERSAL ROOFING INC
2020 THOMAS STREET
HOLLYWOOD FLORIDA 33020
954-923-5100

Property Owner: AIMEE VAN DE MAELE &
HEIDI V JIMENEZ TRS
41 LA GORCE CIR 331414519

Description: COMPLETE REROOF TILE TO TILE 5,700 SQ/FT
Inspector Area: C
Class Code: R3

DETAIL LIST

Alteration/Repair Fees

Alteration Bulding/Structures - Per Costs:	$0.00	$0.00
Awning, Canopy, Patio Cover - Per Costs:	$0.00	$0.00
Area Under Roof - RADON - Per Sq.Ft.:	0	$0.00
Walk-Thru - Per Valuation:	$0.00	$40.00
Repairs to Building/Structure - Per Costs:	$0.00	$0.00
Roofing or Re-roofing - Per Sq.Ft.:	5700	$135.00
Window/Doors - Per # of:	0	$0.00
Signs 36-4 (Writer/Erect) - Per Sq.Ft.:	0	$0.00
Fence and/or Wall - Per Linear Feet:	0	$0.00
Partial Demo (Struct, Sign, Wall) - Per Costs:	$0.00	$0.00
Swimming Pool - Per Gallon:	0	$0.00
Painting - Per Costs:	$0.00	$0.00
Sandblasting - Per Costs:	$0.00	$0.00
Paving - Per Sq.Ft.:	0	$0.00
Concrete Slab - No Paving - Per Sq.Ft.:	0	$0.00
Trees - Per # of:	0	
Hedges - Per Linear Feet:	0	
Groundcover - Per Sq.Ft.:	0	
Landscaping Fee:		$0.00
Other Fees:		$0.00
Penalty Fee (If Applicable):		$0.00

PAID
CITY OF MIAMI BEACH
BUILDING DEPARTMENT

[BSBLDPRM]

Activity Number: B0902912

Fire Safety Fees		
New Building or Addition - Per Sq.Ft.:	0	$0.00
Storage/Industrial Bldg - E & F Occup - Per Sq.Ft.:	0	$0.00
Greenhouse/Argiculture on Premises - Per Sq.Ft.:	0	$0.00
Screen Enclsoure/Trail on Premises - Per Sq.Ft.:	0	$0.00
SS Underground Tanks/App Shelter - Per #:	0	$0.00
Construction not shown Above - Per Costs:	$0.00	$0.00
Alt/Repair Building/Structure - Per Costs:	$0.00	$0.00
Marine Structure Fee		
Dock Area - Per Sq.Ft.:	0	$0.00
Seawall - Per Linear Feet:	0	$0.00
Boat Lifts, Davits, Hoist - Per # of:	0	$0.00
Batter, Mooring, Dock Piles - Per # of:	0	$0.00
Marine Structure Alt/Repair - Per Costs:	$0.00	$0.00
SFBC Compliance Surcharge		
New Const/Add - Res/Mult-Fam/Comm - Per Sq.Ft.:	0	$0.00
New Const/Add - Strg/Ind/Msc - Per Sq.Ft.:	0	$0.00
Cost for Other Construction:		$0.00
Training Fee		
Training Fee:		$40.00
Sanitation Fee:		$117.90
Additional Fees		
1st Reinspection:		$0.00
Continued Reinspections - Per # of:	0	$0.00
Building Joint Inspections - Per # of:	0	$0.00
Change of Contractor Per # of:	0	$0.00
Permit Extension - Per # of:	0	$0.00
Residential Card:		
Commercial Card:		
Permit Card Replacements:		$0.00
Lost Plan Fee - SF:		$0.00
Lost Plan Fee - Other:		$0.00
Overtime Inspection Fees:		$0.00
Total of All Fees:		$356.90
Total of Payments:		$356.90
Balance Due:		$0.00

MIAMIBEACH

BUILDING DEPARTMENT
1700 Convention Center Drive
Miami Beach, FL 33139
Office: 305-673-7610 Fax: 305-673-7857

S-2-PW

$356.90

WORK PERMIT APPLICATION

FLORIDA BUILDING CODE IN EFFECT

Date 5-5-09 Permit # B0902912

If subsidiary or revision: provide the Master building permit number here B: _____

IS THIS PERMIT ASSOCIATED WITH A VIOLATION? If so; BV # _____

Is this a City Owned Property? ☐ Yes ☑ No **HISTORIC DISTRICT** ☐ Yes ☐ No ?

For **DEMOLITON** provide the year the structure was built: _____

Type of Property: ☑ Single Family ☐ Commercial ☐ Multi-Family/Condo ☐ ***Condo Conversion**

TYPE OF IMPROVEMENT: ☑ Building ☐ Electrical ☐ Plumbing ☐ Mechanical

☐ **New Construction** ☑ **Alteration/Remodel/Renovation** ☑ **Construction Revision** Re-Roof

Description of Work: Complete Reroof
53 sq. Tile To Tile
4 sq. Flat Built-up Area

Job Value $ 39,300.00 **Square Feet** 5700 s.F.

Linear Feet _____ **Pool Gallonage** _____ **No. of units** _____

Job Address 41 La Gorce Cir

Folio # 02-3210-003-0300

Owner/~~Builder~~ Jimenez (Trustee) **Drivers License No.** J552-213-53-339-0

Address 41 La Gorce Cir Unit # _____

City Mia. Bch. State FL. Zip 33141-4519 Phone 305-542-0375

Fee Simple Title Holder's Name (if other than owner) N/A

Address _____

City _____ State _____ Zip _____ Phone _____

Contractor Universal Roofing, Inc. **License No.** CCC 1328315

Address 2020 Thomas St.

City Hollywood State FL Zip 33020 Phone 954-923-5100

Cell # 954-593-5675 **E-mail** tracy@universalroofinginc.com **Fax #** 954-923-5395

☐ **Architect** N/A **License No.** _____

Address _____

City _____ State _____ Zip _____ Phone _____

☐ **Engineer** N/A **License No.** _____

Address _____

City _____ State _____ Zip _____ Phone _____

BUILDING WORK PERMIT APPLICATIONS ARE AVAILABLE ON THE MIAMI BEACH WEBSITE AT: WWW.MIAMIBEACHFL.GOV

Bonding Company Name N/A

Address _____

City _____ State _____ Zip _____ Phone _____

Mortgage Lender's Name N/A

Address _____

City _____ State _____ Zip _____ Phone _____

This application is hereby made to obtain a permit to do the work and installations as indicated. I certify that all work will be performed to meet the standards of all laws and construction regulations in this jurisdiction. I understand that **SEPARATE PERMITS** are required for ***Electrical, Mechanical, Plumbing, Signs, Swimming Pools, Spas, Windows, Sliding Glass Doors and Roofing***.

***CONDO CONVERSIONS are a change use of the building and require a new certificate of occupancy. If this application implies a condo conversion, it shall be clearly stated in the description and on the plans; otherwise, the certificate of occupancy will be denied.**

OWNER'S AFFIDAVIT: I certify that all the foregoing information is accurate and that all work will be done in compliance with all applicable laws regulating construction and Zoning.

NOTICE: In addition to the requirements of this permit, there may be additional restrictions applicable to this property that may be found in the public records of this county, and there may be additional permits required from other governmental entities such as water management districts, state agencies or federal agencies.

Under penalties of perjury, I declare that to the best of my knowledge, the facts stated in this document are true. Any information found to be false may cause the revocation and/or denial of the permit and/or certificate of occupancy.

If the contractor is going to be hired by the tenant, check here. ☐

X _____	_____	William T. Flett
Signature of Owner or Agent	Signature of Tenant	Signature of Qualifier
X E. M. JIMENEZ	_____	WILLIAM T. FLETT
Printed Name of Owner or Agent	Printed Name of Tenant	Printed Name of Qualifier
Date 6/6/08	Date _____	Date 5/5/09
William Tracy Flett Signature of Notary Public	_____ Signature of Notary Public	Carol A. English Signature of Notary Public
Commission # DD583872 Expires August 10, 2010 Bonded Troy Fain - Insurance, Inc. 800-385-7019		Commission # DD583379 Expires August 9, 2010 Bonded Troy Fain - Insurance, Inc. 800-385-7019
Identification _____	Identification _____	Identification _____
Sworn to and subscribed before me this	Sworn to and subscribed before me this	Sworn to and subscribed before me this
6 day of JUNE 20, 08	___ day of _____ 20, _____	5 day of MAY 20, 09

If you are applying for this permit as Owner/Builder, please sign below only*

WARNING TO OWNER: **YOUR FAILURE TO RECORD A NOTICE OF COMMENCEMENT MAY RESULT IN YOUR PAYING TWICE FOR IMPROVEMENTS TO YOUR PROPERTY. IF YOU INTEND TO OBTAIN FINANCING, CONSULT WITH YOUR LENDER OR ATTORNEY BEFORE RECORDING YOUR NOTICE OF COMMENCEMENT. NOTICE OF COMMENCEMENT SHOULD BE FILED AT: 22 NW 1ST STREET, MIAMI, FL**

STATE OF FLORIDA **COUNTY OF DADE**

_____ _____

Print Owner's Name Owner's Signature

Sworn to and subscribed before me this _____day of _____20____, by: _____

( ) Personally Known ( ) Produced Identification - Type of Identification _____

_____

Signature of Notary Public (Seal)

Application Approved By: _____ (Permit Clerk)

MIAMIBEACH

BUILDING DEPARTMENT
1700 Convention Center Drive, 2nd Floor
Miami Beach, FL, 33139

PERMIT APPLICATION SUBMITTAL CHECKLIST

All of the checked items listed below must be submitted with your completed work permit application. Your Permit Application cannot be processed if any one of the items checked is incomplete or missing.

"An upfront fee is required prior to issuance of a process number"
All payments must be made prior to 3:00pm

☐ **COMPLETE WORK PERMIT APPLICATION**
- ☐ Owner info. ☐ Folio/Parcel ID # ☐ Contractor info. ☐ Architect info. ☐ Engineer info.

Required Signatures: ☐ Owner ☐ Tenant ☐ Qualifier *Note: All signatures must be notarized & original*

☐ **ARCHITECTURAL & ENGINEERING AFFIDAVIT FOR JOB VALUE AND TOTAL GROSS SQUARE FOOTAGE FOR NEW CONSTRUCTION AND ALTERATION AND REPAIRS (A/E AFFIDAVIT)**

☐ **PROOF OF OWNERSHIP**
- ☐ Recorded warranty deed or; Proof of purchase
- ☐ Unrecorded warranty deed with a letter from the closing attorney; or Title company stating that the warranty deed is in process of being recorded.

☐ **CORPORATION DOCUMENTATION (ARTICLES OF INCORPORATION)**
- ☐ Minutes of meeting (If Board members changed)
- ☐ Articles of Incorporation listing the managing members/officers/directors (Only these persons are authorized to sign the permit application)

Note: Registered Agents are not applicable; unless authorized by a managing member/officer/director

☐ **INSURANCE CERTIFICATE(S) ADDRESSED TO THE CITY OF MIAMI BEACH**
- ☐ Liability insurance ☐ Workman's Compensation insurance or State of Florida exemption

Note: See attached handout.

☐ **LICENSE(S)**
- ☐ State License ☐ Occupational License
- ☐ Certificate of Competency ☐ Municipal Contractor Occupational License

Note: See attached handout.

☐ **FEE SHEET(S)**
- ☐ Mechanical ☐ Electrical ☐ Plumbing ☐ Fire

Note: (A Hold Harmless form is required for Temp for Test)

☐ **PLANS**
- ☐ Two (2) sets – walk thru ☐ Three (3) sets – drop off

Note: If a walk-thru is converted to a drop off you will be required to submit three (3) sets of plans

☒ **ORIGINAL AUTHORIZATION LETTER FROM OWNER TO AGENT**

Note: Power of Attorney letters and Authorization letters must be approved prior to obtaining a process #.

☐ **ORIGINAL AUTHORIZATION LETTER FROM CONDOMINIUM ASSOCIATION**
- ☐ Condominium letterhead ☐ Board member signature ☐ Notary or condo seal

==========

REQUIRED REVIEWS

☐ Building/Accessibility ☐ Structural ☐ Mechanical ☐ Electrical ☐ Plumbing ☐ Elevator ☐ Fire

☐ Engineering ☐ Public Works ☐ Planning & Zoning

William T. Flett — WILLIAM T. FLETT
Received by: Signature — Print

Nisca Cesar — NISCA CESAR
Permit Clerk: Signature — Print

LIMITED POWER OF ATTORNEY FOR REAL ESTATE

Know All Men By These Presents:

That I, Aimee Van de Maele, a Co-Trustee of the Aimee Van de Maele Qualified Personal Residence Trust dated March 8, 2001, as amended, have made, constituted and appointed, and by those presents do make, constitute and appoint Michael Jimenez, a resident of Miami-Dade County, Florida, as my true lawful Attorney-in-Fact for and in my name, place and stead to sign and control all permits and permitting-related documents for that certain real property legally described as:

> An undivided nine tenths (9/10) interest in and to:
> Lot 1, Block 11, LA GORCE ISLAND, according to the Plat thereof, as recorded in Plat Book 34, Page 83, of the Public Records of Miami-Dade County.
>
> More commonly known as: 41 La Gorce Circle, Miami Beach, FL 33141-4519

Giving and granting unto my Attorney-in-Fact as said Attorney-in-Fact full power and authority to execute all documents relating to the permitting process, and to do and perform each and every act and thing whatsoever requisite and necessary to be done and in about the premises as fully, and to all intents and purposes, as might or could be done if I were personally present, with full power of substitution and revocation, hereby ratifying and confirming all that my Attorney-in-Fact shall lawfully do or cause to be done by virtue hereof.

IN WITNESS WHEREOF, I have hereunto set my hand and seal the 14th day of May, 2009.

Signed, sealed and delivered in the presence of:

Printed Witness Name: E.M. JIMENEZ

Printed Witness Name: E.M. JIMENEZ

Aimee Van de Maele

Aimee Van de Maele

Heidi V. Jiménez
Co-Trustee

STATE OF FLORIDA)
COUNTY OF MIAMI-DADE)

The foregoing instrument was acknowledged before me this 14th day of May, 2009, by Aimee Van de Maele, who is personally known or has produced personally known as identification.

Carmelina Deliso
Notary Public

NOTARY PUBLIC-STATE OF FLORIDA
Carmelina Deliso
Commission # DD791197
Expires: MAY 21, 2012
BONDED THRU ATLANTIC BONDING CO., INC.

B0902912

Florida Building Code Edition 2002

High Velocity Hurricane Zone Uniform Permit Application Form.

SECTION A (General Information)

Master Permit Number: _____ Process Number: _____

Contractor's Name: Universal Roofing, Inc.

Job Address: 41 LaGorce Cir., Miami Beach, FL. 33141

ROOF CATEGORY

- [x] Low Slope
- [ ] Asphalt Shingle
- [ ] Mechanically Fastened Tile
- [ ] Metal Panel/Shingles
- [ ] Prescriptive BUR-RAS 150
- [x] Mortar/Adhesive Set Tile
- [ ] Wood Shingles/Shakes

ROOF TYPE

- [ ] New Roof
- [x] Re-Roofing
- [ ] Recovering
- [ ] Repair
- [ ] Maintenance

ROOF SYSTEM INFORMATION

Low Slope Roof Area (S/F)	Steep Slope Roof Area (S/F)	Total (S/F)
400	5300	5700

ROOF SYSTEM INFORMATION

Sketch Roof Plan: Illustrate all levels and sections, roof drains, scuppers, overflow scuppers, and overflow drains. Include dimensions of sections and levels, clearly identify dimensions of elevated pressure zones and location of parapets.

City of Miami Beach Building Department Roofing Permit

Review Type	Initials	Date	Bond
Structural	[illegible]	05/08/09	N/A
Zoning		5/7/09	N/A
Engineering			N/A
Public Works	EUL - 5-7-2009		

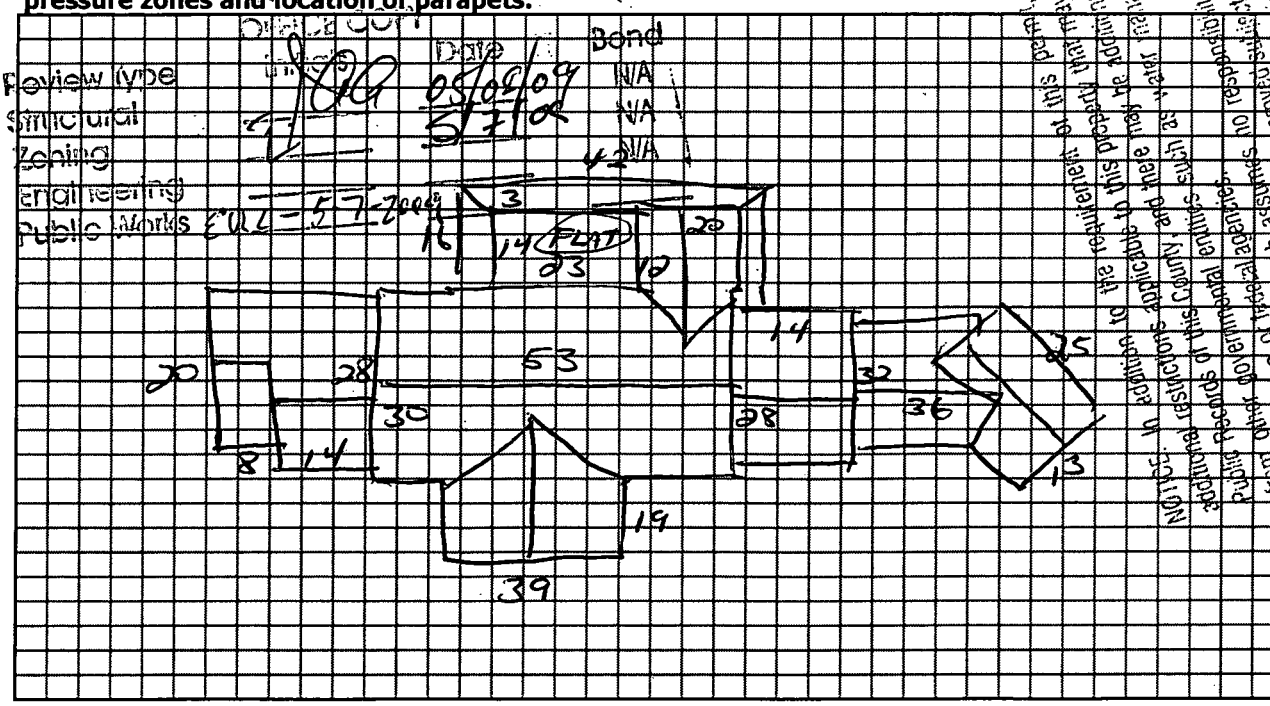

NOTICE: In addition to the requirement of this permit, there may be additional restrictions applicable to this property that may be found in the Public Records of this County, and there may be additional permits required from other governmental entities such as water management districts, state agencies, or federal agencies. The City of Miami Beach assumes no responsibility for the accuracy of the results from these plans which are approved subject to compliance with all Federal, State, and Local Laws, Rules, and Regulations.

SECTION 1524

HIGH VELOCITY HURRICANE ZONES - REQUIRED OWNERS NOTIFICATION FOR ROOFING CONSIDERATIONS

§1524.1 **Scope**. As it pertains to this section, it is the responsibility of the roofing contractor to provide the owner with the required roofing permit, and to explain to the owner the content of this section. The provisions of Chapter 15 of the *Florida Building Code, Building* govern the minimum requirements and standards of the industry for roofing system installations. Additionally, the following items should be addressed as part of the agreement between the owner and the contractor. The owner's initial in the designated space indicates that the item has been explained.

x EMY 1. **Aesthetics-Workmanship:** The workmanship provisions of Chapter 15 (High Velocity Hurricane Zone) are for the purpose of providing that the roofing system meets the wind resistance and water intrusion performance standards. Aesthetics (appearance) are not a consideration with respect to workmanship provisions. Aesthetic issues such as color or architectural appearance, that are not part of a zoning code, should be addressed as part of the agreement between the owner and the contractor.

x EMY 2. **Renailing Wood Decks:** When replacing roofing, the existing wood roof deck may have to be renailed in accordance with the current provisions of Chapter 16 (High Velocity Hurricane Zones) of the. (The roof deck is usually concealed prior to removing the existing roof system).

x EMY 3. **Common Roofs:** Common roofs are those which have no visible delineation between neighboring units (i.e., townhouses, condominiums, etc.). In buildings with common roofs, the roofing contractor and/or owner should notify the occupants of adjacent units of roofing work to be performed.

x EMY 4. **Exposed ceilings:** Exposed, open beam ceilings are where the underside of the roof decking can be viewed from below. The owner may wish to maintain the architectural appearance; therefore, roofing nail penetrations of the underside of the decking may not be acceptable. The provides the option of maintaining this appearance.

x EMY 5. **Ponding Water:** The current roof system and/or deck of the building may not drain well and may cause water to pond (accumulate) in low-lying areas of the roof. Ponding can be an indication of structural distress and may require the review of a professional structural engineer. Ponding may shorten the life expectancy and performance of the new roofing system. Ponding conditions may not be evident until the original roofing system is removed. Ponding conditions should be corrected.

x EMY 6. **Overflow Scuppers (wall outlets):** It is required that rainwater flow off so that the roof is not overloaded from a buildup of water. Perimeter/edge walls or other roof extensions may block this discharge if overflow scuppers (wall outlets) are not provided. It may be necessary to install overflow scuppers in accordance with the requirements of:

x EMY 7. **Ventilation:** Most roof structures should have some ability to vent natural airflow through the interior of the structural assembly (the building itself). The existing amount of attic ventilation shall not be reduced. It may be beneficial to consider additional venting which can result in extending the service life of the roof.

x [signature] 6-14-04 William J. Flott

Owner's/Agent's Signature Date Contractor's Signature

Florida Building Code Edition 2002

High Velocity Hurricane Zone Uniform Permit Application Form.

Section c (Low Sloped Roof System)

Fill in Specific Roof Assembly Components and Identify Manufacturer

(If a component is not used, Identify as "N/A")

System Manufacturer: GAF

NOA No.: 07-1219.09

Design Wind Pressures, From RAS 128 or Calculations:

Pmax1: -49.2 Pmax2: -82.6 Pmax3: -124.3

Maximum Design Pressure, From the Specific NOA System: -52.5

Deck:

Type: WOOD

Gauge/Thickness: 5/8 PLY

Slope: 1/8/12"

Anchor/Base Sheet & No of Ply(s): N/A

Anchor/Base Sheet Fastener. Bonding Material:

Insulation Base Layer: N/A

Base Insulation Size & Thickness:

Base Insulation Fastener/Bonding Material:

Top Insulation Layer: N/A

Top Insulation Size and Thickness:

Top Insulation Fastener/Bonding Material:

Base Sheet(s) & No. of Ply(s): 1 PLY ULTIMA H80

Base Sheet Fastener/Bonding Material: D.C. APPROVED 1 1/4" RINGSHANK NAILS & TIN CAPS

Ply Sheet(s) & No. of Ply(s): 2 PLIES GAFGLAS PLY 4

Ply Sheet Fastener/Bonding Material: TYPE IV HOT ASPHALT

Top Ply: GAFGLAS CAPSHEET

Top Ply Fastener/Bonding Material: TYPE IV HOT ASPHALT

Surfacing: GRANULE / MINERAL SURFACES

Fastener Spacing for Anchor/Bas Sheet Attachment

Field	9	" oc @ Lap, # Rows	2	@	9	" oc
Perimeter	6	" oc @ Lap, # Rows	2	@	6	" oc
Corner	4	" oc @ Lap, # Rows	3	@	4	" oc

Number of Fasteners Per Insulation Board

Field N/A Perimeter ____ Corner ____

Illustrate Components Noted and Details as Applicable:

Woodblocking, Gutter, Edge Termination, Stripping, Flashing, Continuous Cleat, Cant Strip, Base Flashing, Counter-Flashing, Coping, Etc.

Indicate: Mean Roof Height, Parapet Height, Height of Base Flashing, Component Material, Material Thickness, Fastening Type, Fastener Spacing or Submit Manufacturers Details that Comply with RAS 111 and Chapter 16.

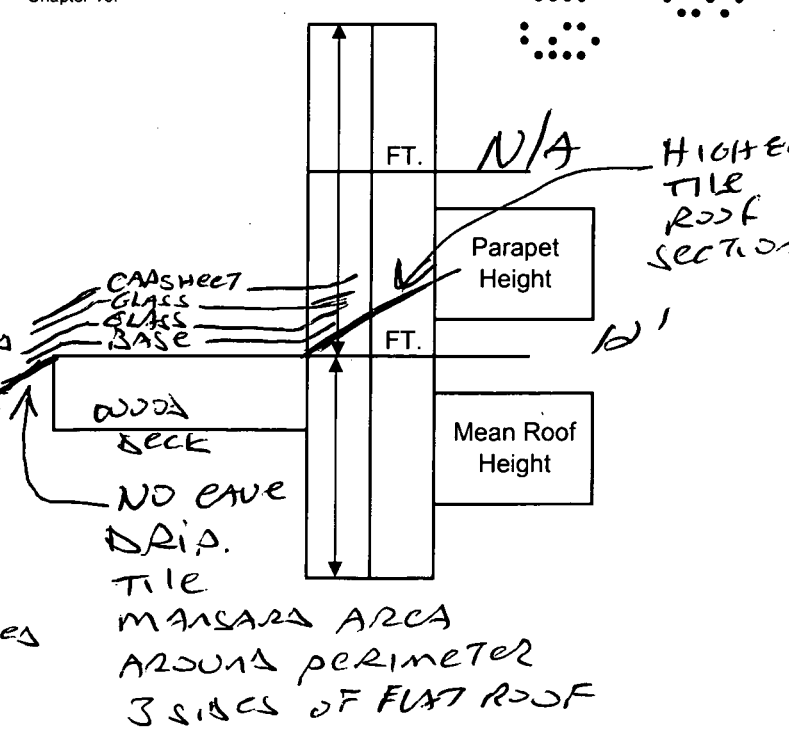

Florida Building Code Edition 2002

High Velocity Hurricane Zone Uniform Permit Application Form.

Section D (Steep Slope Roof System)

Roof System Manufacturer: HANSON

Notice of Acceptance Number: 07-0914.04

Minimum Design Wind Pressures, If Applicable (From RAS 127 or Calculations):

P1: -45 **P1:** -45 **P1:** -45

Maximum Design Pressure (From the NOA Specific System): 66.5#

Method of Tile Attachment: POLYPRO POLYFOAM TILE ADHESIVE LARGE PADDY PLACEMENT

Steep Slope Roof System Description

Deck Type: WOOD / NAILABLE

Type Underlayment: #30 ASTM

Insulation: N/A

Fire Barrier: N/A

Fasterner Type & Spacing: 1.25" APPROVED RINGSHANK NAILS + TIN CAPS 6" O.C. @ LAPS + 2 ROWS 12" O.C. @ FIELD

Adhesive Type: TYPE IV HOT ASPHALT

Type Cap Sheet: #90 ASTM

Roof Covereing: HANSON REGAL TILE

Type & Size Drip Edge: 3" x 3" 26 GA. GALV.

Roof Slope: 3 : 12

Ridge Ventilation? N/A

Mean Roof Height: 20'

Florida Building Code Edition 2002

High Velocity Hurricane Zone Uniform Permit Application Form.

Section E (Tile Calculations)

For Moment based tile systems, choose wither Method 1 or 2. Compare the values for M_f, with the values from M_r. If the M_f values are greater thatn or equal to the M_r values, for each area of roof, then the tile attachment method is acceptable.

Method 1 "Moment Based Tile Calculations Per RAS 127"

(P1: -45 X λ .311 equals 13.995 minus Mg: 8.34 equals Mr1 5.655 NOA Mf 66.5*

(P2: -95.1 X λ .311 equals 29.58 minus Mg: 8.34 equals Mr1 21.24 NOA Mf 66.5

(P3: -95.1 X λ .311 equals 29.58 minus Mg: 8.34 equals Mr1 21.24 NOA Mf 66.5

Method 2 "Simplified Tile Calculation Per Table Below"

Required Moment of Resisitance (M_r) From below: _____ NOA M_f _____

M_r Required Moment Resistence*

Mean Roof Height → / Roof Slope ↓	15'	20'	25'	30'	40'
2:12	30.7	33.4	35.7	37.7	40.7
3:12	28.7	31.3	33.4	35.2	38.1
4:12	26.6	28.9	30.9	32.6	35.2
5:12	24.5	26.7	28.5	30.0	32.5
6:12	22.5	24.5	26.2	27.6	29.8
7:12	20.8	22.6	24.1	25.4	27.5

*** Must be used in conjunction with a list of moments based tile system endorsed by the Broward County Board of Rules and Appeals.**

For Uplift based tile system use Method 3. Compared the values for F' with the values for F_r. If the F' value are greater that or equal to the F_r values, for each area of the roof, then the tile attachment method is acceptable.

Method 3 "Uplift Based Tile Calculations Per RAS 127"

(P1: _____ X l: _____ equals _____ X w: _____ equals _____) minus W: _____ X cos θ: _____ equals Fr1: _____ NOA F' _____

(P2: _____ X l: _____ equals _____ X w: _____ equals _____) minus W: _____ X cos θ: _____ equals Fr1: _____ NOA F' _____

(P3: _____ X l: _____ equals _____ X w: _____ equals _____) minus W: _____ X cos θ: _____ equals Fr1: _____ NOA F' _____

Where to Obtain Information		
DESCRIPTION	**SYMBOL**	**WHERE TO FIND**
Design Pressure	P1, P2 or P3	RAS 127 Table 1 or by an engineering analysis prepared by PE based on ASCE 7
Mean Roof Height	H	Job Site
Roof Slope	θ	Job Site
Aerodynamic Multiplier	λ	NOA
Restoring Moment due to Gravity	M_g	NOA
Attachment Resistance	M_f	NOA
Required Moment Resistance	M_r	Calculated
Minimum Attachment Resistance	F'	NOA
Required Uplift Resistance	F_r	Calculated
Average Tile Weight	W	NOA
Tile Dimensions	l = length w = width	NOA
All calculations must be submitted to the Building Official at the time of permit application.		

MIAMI-DADE

BUILDING CODE COMPLIANCE OFFICE (BCCO)
PRODUCT CONTROL DIVISION

MIAMI-DADE COUNTY, FLORIDA
METRO-DADE FLAGLER BUILDING
140 WEST FLAGLER STREET, SUITE 1603
MIAMI, FLORIDA 33130-1563
(305) 375-2901 FAX (305) 375-2908

NOTICE OF ACCEPTANCE (NOA)

Hanson Roof Tile
1340 SW 34th Ave
Deerfield Beach, FL 33442

SCOPE:
This NOA is being issued under the applicable rules and regulations governing the use of construction materials. The documentation submitted has been reviewed by Miami-Dade County Product Control Division and accepted by the Board of Rules and Appeals (BORA) to be used in Miami Dade County and other areas where allowed by the Authority Having Jurisdiction (AHJ).

This NOA shall not be valid after the expiration date stated below. The Miami-Dade County Product Control Division (In Miami Dade County) and/or the AHJ (in areas other than Miami Dade County) reserve the right to have this product or material tested for quality assurance purposes. If this product or material fails to perform in the accepted manner, the manufacturer will incur the expense of such testing and the AHJ may immediately revoke, modify, or suspend the use of such product or material within their jurisdiction. BORA reserves the right to revoke this acceptance, if it is determined by Miami-Dade County Product Control Division that this product or material fails to meet the requirements of the applicable building code.

This product is approved as described herein, and has been designed to comply with the Florida Building Code including the High Velocity Hurricane Zone of the Florida Building Code.

DESCRIPTION: Hanson Regal/Spanish "S" II Roof Tile

LABELING: Each unit shall bear a permanent label with the manufacturer's name or logo, city, state and following statement: "Miami-Dade County Product Control Approved", unless otherwise noted herein.

RENEWAL of this NOA shall be considered after a renewal application has been filed and there has been no change in the applicable building code negatively affecting the performance of this product.

TERMINATION of this NOA will occur after the expiration date or if there has been a revision or change in the materials, use, and/or manufacture of the product or process. Misuse of this NOA as an endorsement of any product, for sales, advertising or any other purposes shall automatically terminate this NOA. Failure to comply with any section of this NOA shall be cause for termination and removal of NOA.

ADVERTISEMENT: The NOA number preceded by the words Miami-Dade County, Florida, and followed by the expiration date may be displayed in advertising literature. If any portion of the NOA is displayed, then it shall be done in its entirety.

INSPECTION: A copy of this entire NOA shall be provided to the user by the manufacturer or its distributors and shall be available for inspection at the job site at the request of the Building Official.

This NOA renews NOA No. 02-0916.09 and consists of pages 1 through 7.
The submitted documentation was reviewed by Jorge L. Acebo.

NOTICE: In addition to the requirement of this permit, there may be additional restrictions applicable to this property that may be found in the Public Records of this County, and there may be additional permits required from other governmental entities such as water management's districts, state agencies, or federal agencies.
The City of Miami Beach assumes no responsibility for accuracy of or results from these plans which are approved subject to compliance with all Federal, State and Local Laws, Rules, and Regulations.

02.04.00
CTB

ROOFING ASSEMBLY APPROVAL

Category: Roofing
Sub Category: Roofing Tiles
Material: Concrete

1. SCOPE

This renews a roofing system using **Hanson Regal/Spanish 'S' II Concrete Roof Tile**, as manufactured by Hanson Roof Tile in ***Deerfield Beach, Florida*** and as described in Section 2 of this Notice of Acceptance. For the locations where the pressure requirements, as determined by applicable building code do not exceed the values listed in section 4 herein. The attachment calculations shall be done as a moment based system.

2. PRODUCT DESCRIPTION

Manufactured by Applicant	Dimensions	Test Specifications	Product Description
Hanson Regal / Spanish "S" II Tile	Length: 17 ¼" Width: 13 ¼" ½" thick	TAS 112	High profile concrete roof tile for direct deck or battened nail-on, mortar or adhesive set applications.
Trim Pieces	Length: varies Width: varies	TAS 112	Accessory trim, concrete roof pieces for use at hips, rakes, ridges and valley terminations.

2.1 COMPONENTS OR PRODUCTS MANUFACTURED BY OTHERS

Product	Dimensions	Test Specifications	Product Description	Manufacturer
Tile Nails	Min. 10dx 3"	TAS 114 Appendix E	Corrosion resistant screw or smooth shank nails	Generic (With current NOA)
Tile Screws	#8x 2 ½" long 0.335" head dia. 0.131" shank dia. 0.175" screw thread dia.	TAS 114 Appendix E	Corrosion resistant, coated, square drive, galvanized, coarse thread wood screws	Generic (With current NOA)
Hurricane Clip & Fasteners	Clips Min. ½" width Min.06" thick Clip Fasteners Min. 8d x 1 ¼"	TAS 114 Appendix E	Corrosion resistant clips with corrosion resistant nails.	Generic (With current NOA)

2.2 EVIDENCE SUBMITTED

Test Agency	Test Identifier	Test Name/Report	Date
Redland Technologies	7161-03 Appendix III	PA 102	Dec. 1991
	7161-03 Appendix III	PA 102(A)	Dec. 1991
	7161-03 Appendix II	PA 108 (Nail-On)	Dec. 1991
	Letter of Aug. 1, 1994	PA 108 (Nail-On)	Aug. 1994
	P09647-01	PA 108(Mortar Set)	Aug. 1994
	P0402	Withdrawal Resistance Testing of screw vs. smooth shank nails	Sept. 1993
The Center for Applied Engineering, Inc.	94-083	PA 101 (Adhesive Set)	April 1994
	94-084	PA 101 (Mortar Set)	May 1994
	25-7094-9	PA 102 (4" Headlap, Nails, Direct Deck, New Construction)	Oct. 1994
	25-7094-6	PA 102 (4" Headlap, Nails, Battens)	Oct. 1994
	25-7183-4	PA 102 (2 Quik-Drive Screws, Direct Deck)	Feb. 1995
	25-7183-3	PA 102 (2 Quik-Drive Screws, Battens)	Feb. 1995
	25-7214-3	PA 102 (1 Quik-Drive Screw, Direct Deck)	March, 1995
	25-7214-7	PA 102 (1 Quik-Drive Screw, Battens)	March, 1995
	Project No. 307025 Test #MDC-76	PA 100	Oct. 1994
All State Engineering & Testing Consultants, Inc.	YQ-135	PA 112	Dec. 1998
Walker Engineering	Calculations	Aerodynamic Multiplier	March 1999
IBA Consultants, Inc.	2381-252	TAS 112	09/20/07

3. LIMITATIONS

3.1 Fire classification is not part of this acceptance.

3.2 For mortar or adhesive set tile applications, a static field uplift test in accordance with RAS 106 may be required, refer to applicable building code.

3.3 Applicant shall retain the services of a Miami-Dade County Certified Laboratory to perform quarterly test in accordance with TAS 112, appendix 'A'. Such testing shall be submitted to the Building Code Compliance Office for review.

3.4 Minimum underlayment shall be in compliance with the applicable Roofing Applications Standards listed section 4.1 herein.

3.5 30/90 hot mopped underlayment applications may be installed perpendicular to the roof slope unless stated otherwise by the underlayment material manufacturers published literature.

3.6 This acceptance is for wood deck applications. Minimum deck requirements shall be in compliance with applicable building code.

4. INSTALLATION

4.1 Hanson Regal/Spanish 'S' II Concrete Roof Tile and its components shall be installed in strict compliance with Roofing Application Standard RAS 118, RAS 119, and RAS 120.

4.2 Data For Attachment Calculations

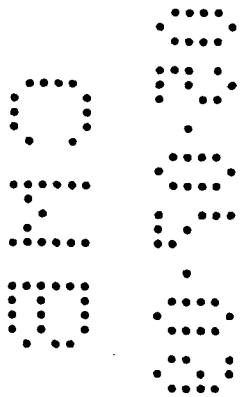

Table 1: Aerodynamic Multipliers - λ (ft^3)		
Tile Profile	λ (ft^3) Batten Application	λ (ft^3) Direct Deck Application
Pioneer Regal/Spanish 'S' II	0.287	0.311

Table 2: Restoring Moments due to Gravity - M_g (ft-lbf)										
Tile Profile	3": 12"		4": 12"		5": 12"		6": 12"		7": 12" or greater	
Pioneer Regal/Spanish 'S' II	Battens	Direct Deck	Battens	Direct Deck	Battens	Direct Deck	Battens	Direct Deck	Battens	Direct Deck
	7.77	8.34	7.65	8.20	7.49	8.03	7.30	7.83	7.10	7.61

Table 3: Attachment Resistance Expressed as a Moment - M_f (ft-lbf) For Nail-On Systems				
Tile Profile	Fastener Type	Direct Deck (min 15/32" plywood)	Direct Deck (min. 19/32" plywood)	Battens
Hanson Regal/Spanish 'S' II	2-10d Ring Shank Nails	28.6	41.2	19.4
	1-10d Smooth or Screw Shank Nail	5.1	6.8	2.8
	2-10d Smooth or Screw Shank Nails	6.9	9.2	7.3
	1 #8 Screw	20.7	20.7	18.1
	2 #8 Screws	43.2	43.2	29.8
	1-10d Smooth or Screw Shank Nail (Field Clip)	23.1	23.1	19.0
	1-10d Smooth or Screw Shank Nail (Eave Clip)	29.3	29.3	24.0
	2-10d Smooth or Screw Shank Nails (Field Clip)	27.6	27.6	38.6
	2-10d Smooth or Screw Shank Nails (Eave Clip)	38.1	38.1	41.8
	2-10d Ring Shank Nails[1]	33.1	48.1	45.2

1 Installation with a 4" tile headlap and fasteners are located a min. of 2½" from head of tile.

Table 4: Attachment Resistance Expressed as a Moment M_f (ft-lbf) For Two Patty Adhesive Set Systems		
Tile Profile	Tile Application	Minimum Attachment Resistance
Hanson Regal/Spanish 'S' II	Adhesive	29.3[3]

2 See manufactures component approval for installation requirements.

3 Flexible Products Company TileBond Average weight per patty 10.7 grams.
Polyfoam Product, Inc. Average weight per patty 8 grams.

3. LIMITATIONS

3.1 Fire classification is not part of this acceptance.

3.2 For mortar or adhesive set tile applications, a static field uplift test in accordance with RAS 106 may be required, refer to applicable building code.

3.3 Applicant shall retain the services of a Miami-Dade County Certified Laboratory to perform quarterly test in accordance with TAS 112, appendix 'A'. Such testing shall be submitted to the Building Code Compliance Office for review.

3.4 Minimum underlayment shall be in compliance with the applicable Roofing Applications Standards listed section 4.1 herein.

3.5 30/90 hot mopped underlayment applications may be installed perpendicular to the roof slope unless stated otherwise by the underlayment material manufacturers published literature.

3.6 This acceptance is for wood deck applications. Minimum deck requirements shall be in compliance with applicable building code.

4. INSTALLATION

4.1 Hanson Regal/Spanish 'S' II Concrete Roof Tile and its components shall be installed in strict compliance with Roofing Application Standard RAS 118, RAS 119, and RAS 120.

4.2 Data For Attachment Calculations

Table 1: Aerodynamic Multipliers - λ (ft^3)		
Tile Profile	λ (ft^3) Batten Application	λ (ft^3) Direct Deck Application
Pioneer Regal/Spanish 'S' II	0.287	0.311

Table 2: Restoring Moments due to Gravity - M_g (ft-lbf)										
Tile Profile	3": 12"		4": 12"		5": 12"		6": 12"		7": 12" or greater	
Pioneer Regal/Spanish 'S' II	Battens	Direct Deck	Battens	Direct Deck	Battens	Direct Deck	Battens	Direct Deck	Battens	Direct Deck
	7.77	8.34	7.65	8.20	7.49	8.03	7.30	7.83	7.10	7.61

Table 3: Attachment Resistance Expressed as a Moment - M_f (ft-lbf) For Nail-On Systems				
Tile Profile	Fastener Type	Direct Deck (min 15/32" plywood)	Direct Deck (min. 19/32" plywood)	Battens
Hanson Regal/Spanish 'S' II	2-10d Ring Shank Nails	28.6	41.2	19.4
	1-10d Smooth or Screw Shank Nail	5.1	6.8	2.8
	2-10d Smooth or Screw Shank Nails	6.9	9.2	7.3
	1 #8 Screw	20.7	20.7	18.1
	2 #8 Screws	43.2	43.2	29.8
	1-10d Smooth or Screw Shank Nail (Field Clip)	23.1	23.1	19.0
	1-10d Smooth or Screw Shank Nail (Eave Clip)	29.3	29.3	24.0
	2-10d Smooth or Screw Shank Nails (Field Clip)	27.6	27.6	38.6
	2-10d Smooth or Screw Shank Nails (Eave Clip)	38.1	38.1	41.8
	2-10d Ring Shank Nails[1]	33.1	48.1	45.2

1 Installation with a 4" tile headlap and fasteners are located a min. of 2½" from head of tile.

Table 4: Attachment Resistance Expressed as a Moment M_f (ft-lbf) For Two Patty Adhesive Set Systems		
Tile Profile	Tile Application	Minimum Attachment Resistance
Hanson Regal/Spanish 'S' II	Adhesive	29.3[3]

2 See manufactures component approval for installation requirements.

3 Flexible Products Company TileBond Average weight per patty 10.7 grams.
Polyfoam Product, Inc. Average weight per patty 8 grams.

Table 4A: Attachment Resistance Expressed as a Moment - M_f (ft-lbf) For Single Patty Adhesive Set Systems		
Tile Profile	**Tile Application**	**Minimum Attachment Resistance**
Hanson Regal/Spanish 'S' II	Polyfoam PolyPro™	66.5[4]
	Polyfoam PolyPro™	38.7[5]
4 Large paddy placement of 63grams of PolyPro™.		
5 Medium paddy placement of 24grams of PolyPro™.		

Table 4B: Attachment Resistance Expressed as a Moment - M_f (ft-lbf) For Mortar Set Systems		
Tile Profile	**Tile Application**	**Attachment Resistance**
Hason Regal/Spanish 'S' II	Mortar Set	24.5

5. LABELING

All tiles shall bear the imprint or identifiable marking of the manufacturer's name or logo **(See Detail Below)**, or following statement: "Miami-Dade County Product Control Approved".

HANSON

HANSON REGAL/SPANISH "S" II ROOF TILE IDENTIFICATION MARK
(LOCATED UNDERNEATH TILE)

6. BUILDING PERMIT REQUIREMENTS

6.1 Application for building permit shall be accompanied by copies of the following:

6.1.1 This Notice of Acceptance.

6.1.2 Any other documents required by the Building Official or applicable building code in order to properly evaluate the installation of this system.

PROFILE DRAWINGS

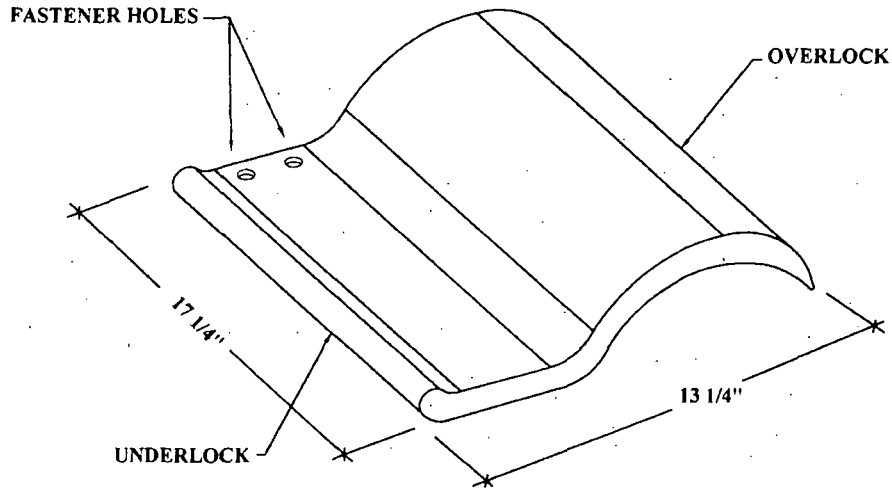

REGAL AKA SPANISH "S" II

HANSON REGAL/SPANISH 'S' II CONCRETE ROOF TILE

END OF THIS ACCEPTANCE

MIAMI-DADE

BUILDING CODE COMPLIANCE OFFICE (BCCO)
PRODUCT CONTROL DIVISION

MIAMI-DADE COUNTY, FLORIDA
METRO-DADE FLAGLER BUILDING
140 WEST FLAGLER STREET, SUITE 1603
MIAMI, FLORIDA 33130-1563
(305) 375-2901 FAX (305) 375-2908

NOTICE OF ACCEPTANCE (NOA)

Polyfoam Products, Inc.
11715 Boudreaux Road
Tomball, TX 77375

SCOPE:
This NOA is being issued under the applicable rules and regulations governing the use of construction materials. The documentation submitted has been reviewed by the BCCO and accepted by the Building Code and Product Review Committee to be used in Miami Dade County and other areas where allowed by the Authority Having Jurisdiction (AHJ).

This NOA shall not be valid after the expiration date stated below. The BCCO (In Miami Dade County) and/or the AHJ (in areas other than Miami Dade County) reserve the right to have this product or material tested for quality assurance purposes. If this product or material fails to perform in the accepted manner, the manufacturer will incur the expense of such testing and the AHJ may immediately revoke, modify, or suspend the use of such product or material within their jurisdiction. BCCO reserves the right to revoke this acceptance, if it is determined by BCCO that this product or material fails to meet the requirements of the applicable building code.

This product is approved as described herein, and has been designed to comply with the High Velocity Hurricane Zone of the Florida Building Code.

DESCRIPTION: Polypro® AH160

RENEWAL of this NOA shall be considered after a renewal application has been filed and there has been no change in the applicable building code negatively affecting the performance of this product.

TERMINATION of this NOA will occur after the expiration date or if there has been a revision or change in the materials, use, and/or manufacture of the product or process. Misuse of this NOA as an endorsement of any product, for sales, advertising or any other purposes shall automatically terminate this NOA. Failure to comply with any section of this NOA shall be cause for termination and removal of NOA.

ADVERTISEMENT: The NOA number preceded by the words Miami-Dade County, Florida, and followed by the expiration date may be displayed in advertising literature. If any portion of the NOA is displayed, then it shall be done in its entirety.

INSPECTION: A copy of this entire NOA shall be provided to the user by the manufacturer or its distributors and shall be available for inspection at the job site at the request of the Building Official.

This NOA renews NOA No.01-0521.02 and consists of pages 1 through 7
The submitted documentation was reviewed by Jorge L. Acebo.

NOTICE: In addition to the requirement of this permit, there may be additional restrictions applicable to this property that may be found in the Public Records of this County, and there may be additional permits required from other governmental entities such as water management's districts, state agencies, or federal agencies.

The City of Miami Beach assumes no responsibility for accuracy of or results from these plans which are approved subject to compliance with all Federal, State, and Local Laws, Rules, and Regulations.

PRODUCT CONTROL ACCEPTED

ROOFING ASSEMBLY APPROVAL:

Category: Roofing
Sub Category: Roof tile adhesive
Materials: Polyurethane

SCOPE:

This approves **Polypro® AH160** as manufactured by **Polyfoam Products, Inc.** as described in Section 2 of this Notice of Acceptance. For the locations where the design pressure requirements, as determined by applicable building code, docs not exceed the design pressure values obtained by calculations in compliance with Roofing Application Standard RAS 127, for use with approved flat, low, and high profilc roof tiles system using Polypro® AH 160. Where the attachment calculations are done as a moment based system for single patty placement, and as an uplift based system for double patty systems

PRODUCTS MANUFACTURED BY APPLICANT:

Product	Dimensions	Test Specifications	Product Description
Polypro® AH160	N/A	TAS 101	Two component polyurethane foam adhesive
Foampro® RTF1000	N/A		Dispensing Equipment
ProPack® 30 & 100	N/A		Dispensing Equipment

PRODUCTS MANUFACTURED BY OTHERS:

Any Miami-Dade County Product Control Accepted Roof Tile Assembly having a current NOA which list moment resistance values with the use of Polypro AH160 roof tile adhesive.

PHYSICAL PROPERTIES:

Property	Test	Results
Density	ASTM D 1622	1.6 lbs./ft.^{3}
Compressive Strength	ASTM D 1621	18 PSI Parallel to rise 12 PSI Perpendicular to rise
Tensile Strength	ASTM D 1623	28 PSI Parallel to rise
Water Absorption	ASTM D 2127	0.08 Lbs./Ft^2
Moisture Vapor Transmission	ASTM E 96	3.1 Perm / Inch
Dimensional Stability	ASTM D 2126	+0.07% Volume Change @ -40° F., 2 weeks +6.0% Volume Change @158°F., 100% Humidity, 2 weeks
Closed Cell Content	ASTM D 2856	86%

Note: The physical properties listed above are presented as typical average values as determined by accepted ASTM test methods and are subject to normal manufacturing variation.

EVIDENCE SUBMITTED:

Test Agency	Test Identifier	Test Name/Report	Date
Center for Applied Engineering	#94-060	TAS 101	04/08/94
	257818-1PA	TAS 101	12/16/96
	25-7438-3	SSTD 11-93	10/25/95
	25-7438-4		
	25-7438-7	SSTD 11-93	11/02/95
	25-7492	SSTD 11-93	12/12/95
Miles Laboratories Polymers Division	NB-589-631	ASTM D 1623	02/01/94
Ramtech Laboratories, Inc.	9637-92	ASTM E 108	04/30/93
Southwest Research Institute	01-6743-011	ASTM E 108	11/16/94
	01-6739-062b[1]	ASTM E 84	01/16/95
Trinity Engineering	7050.02.96-1	TAS 114	03/14/96
Celotex Corp. Testing Services	528454-2-1	TAS 101	10/23/98
	528454-9-1		
	528454-10-1		
	520109-1	TAS 101	12/28/98
	520109-2		
	520109-3		
	520109-6		
	520109-7		
	520191-1	TAS 101	03/02/99
	520109-2-1		

LIMITATIONS:

1. Fire classification is not part of this acceptance. Refer to the Prepared Roof Tile Assembly for fire rating.

2. Polypro® AH160 shall solely be used with flat, low, & high tile profiles.

3. Minimum underlayment shall be in compliance with the Roofing Application Standard RAS 120.

4. Roof Tile manufactures acquiring acceptance for the use of Polypro® AH160 roof tile adhesive with their tile assemblies shall test in accordance with TAS 101.

5. Roof Tile manufactures acquiring acceptance for the use of HANDI-STICK roof tile adhesive with their tile assemblies shall test in accordance with TAS 101 with section 10.4 as modified herein.

$$F' = \left(\frac{F}{2}\right)\frac{W}{MS}$$

INSTALLATION:

1. Polypro® AH160 may be used with any roof tile assembly having a current NOA that lists uplift resistance values with the use of Polypro® AH160.
2. Polypro® AH160 shall be applied in compliance with the Component Application section and the corresponding Placement Details noted herein. The roof tile assembly's adhesive attachment with the use of Polypro® AH160 shall provide sufficient attachment resistance, expressed as an uplift based system, to meet or exceed the uplift resistance determined in compliance with Miami-Dade County Roofing Application Standards RAS 127. The adhesive attachment data is noted in the roof tile assembly NOA
3. Polypro® AH160 roof tile adhesive and its components shall be installed in accordance with Roofing Application Standard RAS 120, and Polyfoam Products, Inc. Polypro® AH160 Operating Instruction and Maintenance Booklet.
4. Installation must be by a Factory Trained 'Qualified Applicator' approved and licensed by Polyfoam Products, Inc. Polyfoam Products Inc. shall supply a list of approved applicators to the authority having jurisdiction.
5. Calibration of the Foampro® dispensing equipment is required before application of any adhesive. The mix ratio between the "A" component and the "B" component shall be maintained between 1.0-1.15 (A): 1.0 (B). The dispense timer shall be set to deliver 0.0175 to 0.15 pounds per tile as determined at calibration. No other settings shall be approved.
6. Polypro® AH160 shall be applied with Foampro RTF1000 or ProPack® 30 & 100 dispensing equipment only.
7. Polypro® AH160 shall not be exposed permanently to sunlight.
8. Tiles must be adhered in freshly applied adhesive. Tile must be set within 2 to 3 minutes after Polypro® AH160 has been dispensed.
9. Polypro® AH160 placement and minimum patty weight shall be in accordance with the 'Placement Details' herein. Each generic tile profile requires the specific placement noted herein.

Table 1: Adhesive Placement For Each Generic Tile Profile

Tile Profile	Placement Detail	Single Paddy Weight Min. (grams)	Two Paddy Weight per paddy Min. (grams)
Flat, Low, High Profiles	#1	35	N/A
High Profile (2 Piece Barrel)	#1	17/side on cap and 34/pan	N/A
Flat, Low, High Profiles	#2	24	N/A
Flat, Low, High Profiles	#3		8

LABELING:

All Polypro® AH160 containers shall comply with the Standard Conditions listed herein.

BUILDING PERMIT REQUIREMENTS:

As required by the Building Official or applicable building code in order to properly evaluate the installation of this system.

ADHESIVE PLACEMENT DETAIL 1
SINGLE PATTY

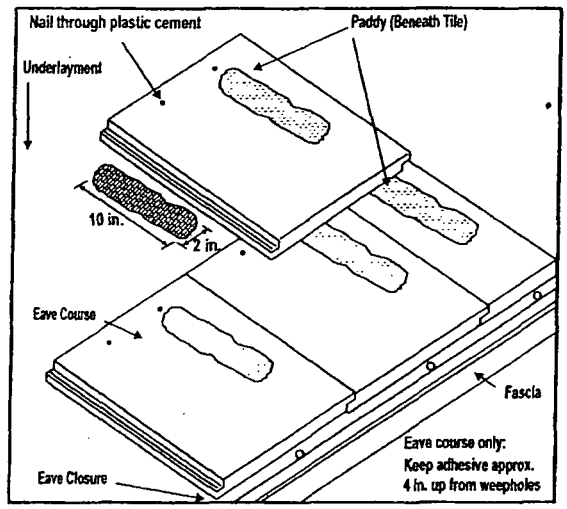

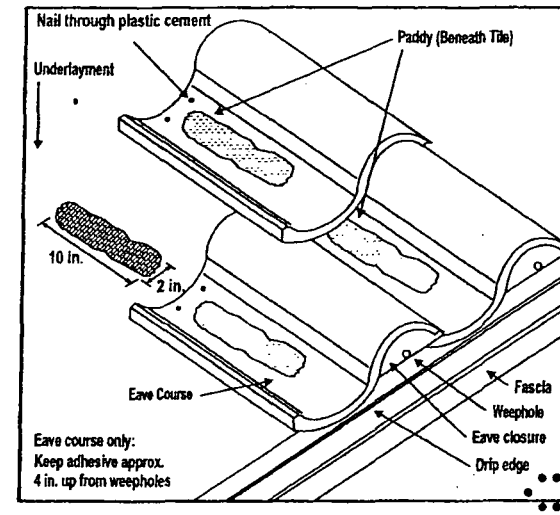

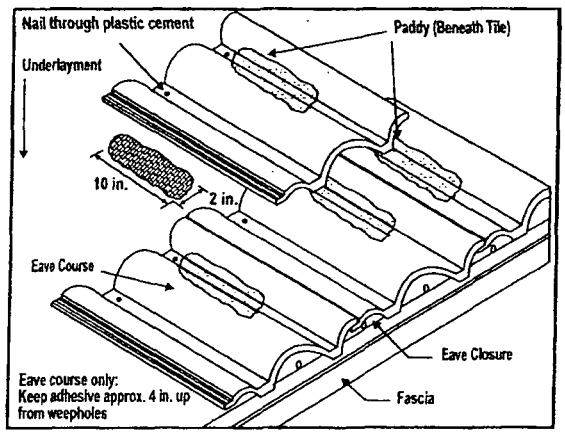

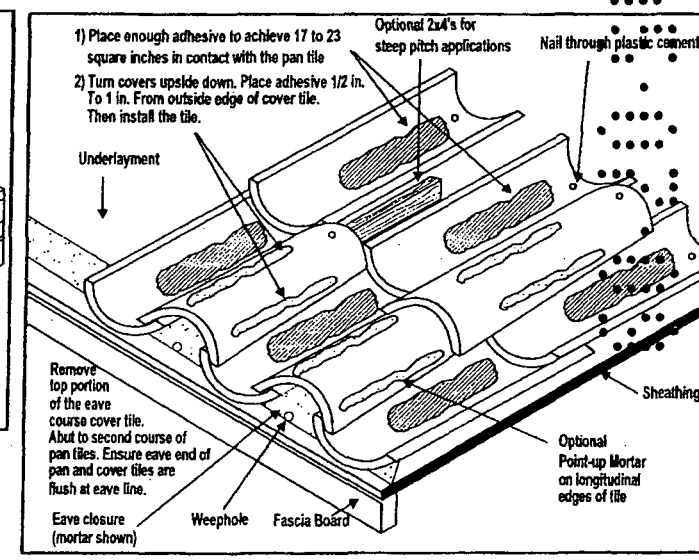

ADHESIVE PLACEMENT DETAIL 2
SINGLE PATTY

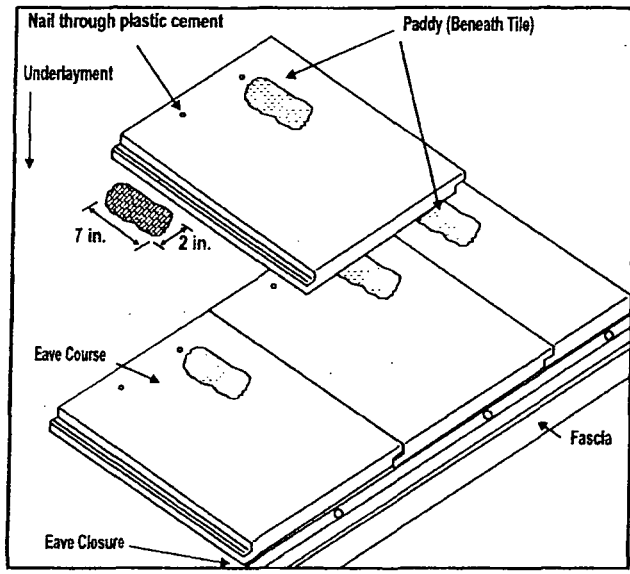

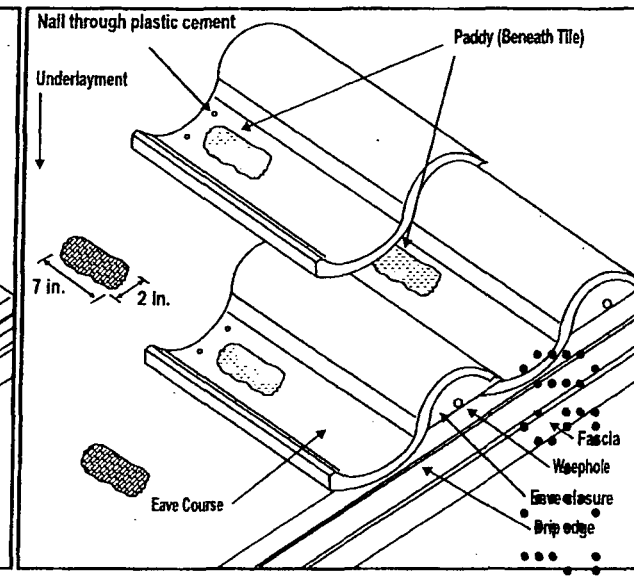

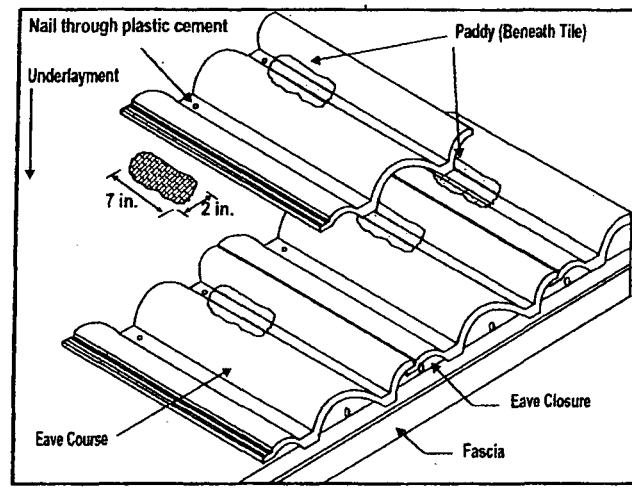

ADHESIVE PLACEMENT DETAIL 3
DOUBLE PATTY

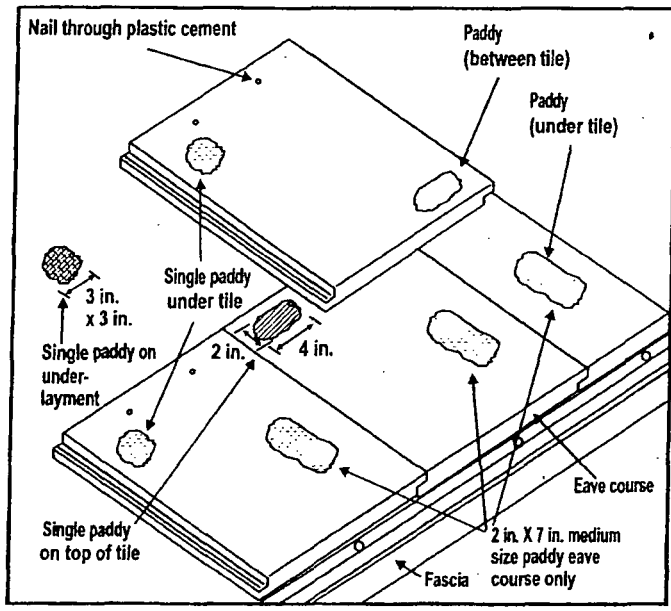

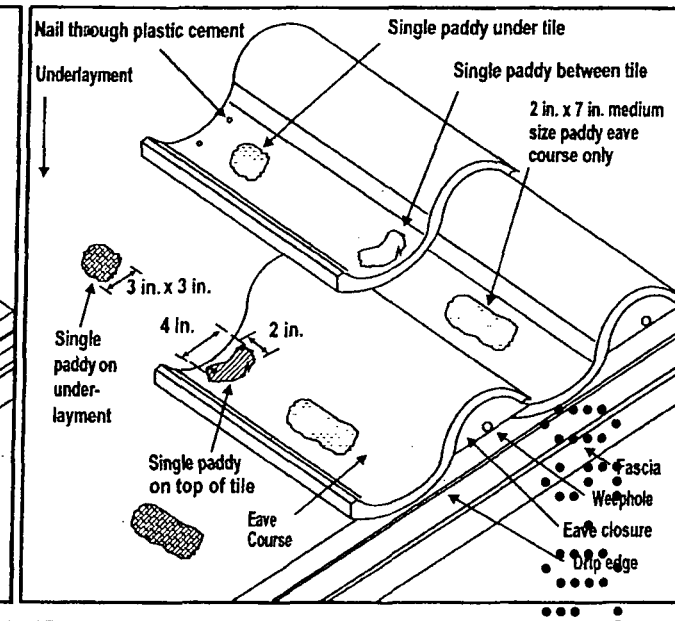

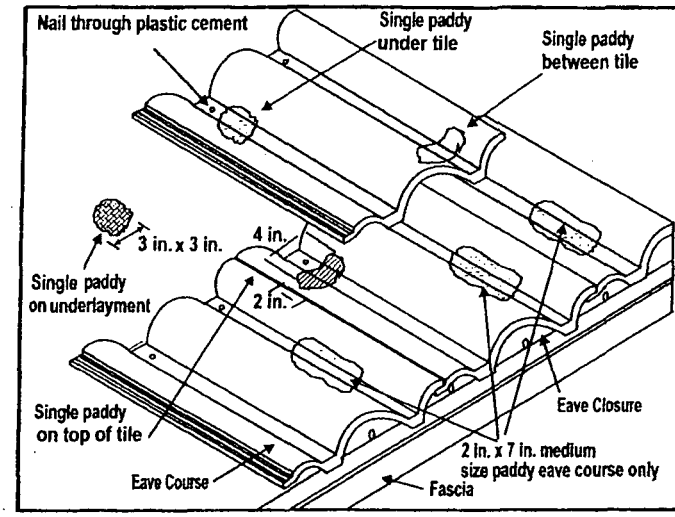

END OF THIS ACCEPTANCE

MIAMI-DADE

BUILDING CODE COMPLIANCE OFFICE (BCCO)
PRODUCT CONTROL DIVISION

MIAMI-DADE COUNTY, FLORIDA
METRO-DADE FLAGLER BUILDING
140 WEST FLAGLER STREET, SUITE 1603
MIAMI, FLORIDA 33130-1563
(305) 375-2901 FAX (305) 375-2908

NOTICE OF ACCEPTANCE (NOA)

GAF Material Corporation
1361 Alps Road
Wayne, NJ 07470

SCOPE:
This NOA is being issued under the applicable rules and regulations governing the use of construction materials. The documentation submitted has been reviewed by the BCCO and accepted by the Building Code and Product Review Committee to be used in Miami Dade County and other areas where allowed by the Authority Having Jurisdiction (AHJ).

This NOA shall not be valid after the expiration date stated below. The Miami-Dade County Product Control Division (In Miami Dade County) and/or the AHJ (in areas other than Miami Dade County) reserve the right to have this product or material tested for quality assurance purposes. If this product or material fails to perform in the accepted manner, the manufacturer will incur the expense of such testing and the AHJ may immediately revoke, modify, or suspend the use of such product or material within their jurisdiction. BORA reserves the right to revoke this acceptance, if it is determined by Miami-Dade County Product Control Division that this product or material fails to meet the requirements of the applicable building code.

This product is approved as described herein, and has been designed to comply with the Florida Building Code and the High Velocity Hurricane Zone of the Florida Building Code.

DESCRIPTION: GAF Conventional Built-Up Roof System for Wood Decks.

LABELING: Each unit shall bear a permanent label with the manufacturer's name or logo, city, state and following statement: "Miami-Dade County Product Control Approved", unless otherwise noted herein.

RENEWAL of this NOA shall be considered after a renewal application has been filed and there has been no change in the applicable building code negatively affecting the performance of this product.

TERMINATION of this NOA will occur after the expiration date or if there has been a revision or change in the materials, use, and/or manufacture of the product or process. Misuse of this NOA as an endorsement of any product, for sales, advertising or any other purposes shall automatically terminate this NOA. Failure to comply with any section of this NOA shall be cause for termination and removal of NOA.

ADVERTISEMENT: The NOA number preceded by the words Miami-Dade County, Florida, and followed by the expiration date may be displayed in advertising literature. If any portion of the NOA is displayed, then it shall be done in its entirety.

INSPECTION: A copy of this entire NOA shall be provided to the user by the manufacturer or its distributors and shall be available for inspection at the job site at the request of the Building Official.

This NOA renews and supersedes NOA No. 03-0501.05 and consists of pages 1 through 19.
The submitted documentation was reviewed by Jorge L. Acebo.

MIAMI-DADE COUNTY
APPROVED

NOA No.: 07-1219.09
Expiration Date: 11/04/13
Approval Date: 03/20/08
Page 1 of 19

PAGES 17, 18 & 19

02 02 25

ROOFING SYSTEM APPROVAL

Category:	Roofing
Sub-Category:	BUR
Deck Type:	Wood
Maximum Design Pressure	-75 psf

TRADE NAMES OF PRODUCTS MANUFACTURED OR LABELED BY APPLICANT:

TABLE 1

Product	Dimensions	Test Specification	Product Description
Leak Buster™ Matrix™ 307 Premium Asphalt Primer	3, 5, 55 gallons	ASTM D 41	Asphalt concrete primer used to promote adhesion of asphalt in built-up roofing.
GAF Mineral Shield™ Granules	60 & 100 lb. bags	ASTM D 1863	Granules for surfacing of exposed asphalt, cold process cement or emulsion. GAF Mineral Shield™ Granules shall be used for flashing applications only.
Leak Buster™ Matrix™ 305 Fibered Asphalt Emulsion	5 gallons	ASTM 1227	Surface coating for smooth surfaced roofs.
Leak Buster™ Matrix™ 303 Premium Fibered Aluminum Roof Coating	1, 5 gallons	ASTM D 2824	Fibered aluminum coating.
LeakBuster™ Matrix™ 322 Elastomeric Roof Coating	55 gallons		Elastomeric roof coating.
LeakBuster™ Matrix™ Select Asphalt Emulsion Fibered 306	55 gallons		Asphalt emulsion fibered.
Leak Buster™ Matrix™ 204 Wet/Dry Roof Cement	1, 5 gallons	ASTM D-4586 ASTM D-3409	Refined asphalt blended with a mineral stabilizer and fibers. Permits adhesion to wet and dry surfaces.
RUBEROID® Modified Bitumen Flashing Cement	5 gallons	ASTM D 4586	Fiber reinforced, polymer modified Flashing cement
LeakBuster™ Matrix™ 201 Premium SBS Flashing Cement	5 gallons	ASTM D 4586	Asphalt flashing Cement
GAFGLAS® #75	39.37" (1 meter) wide	ASTM D 4601	Asphalt impregnated and coated glass mat base sheet.

Product	Dimensions	Test Specification	Product Description
GAFGLAS® #80 ULTIMA™ Base Sheet	39.37" (1 meter) wide	ASTM D4601	Asphalt impregnated and coated, fiberglass base sheet
GAFGLAS® Flex Ply™ 6	39.37" (1 meter) wide	ASTM D 2178	Type VI asphalt impregnated glass felt with asphalt coating.
GAFGLAS® Ply 4	39.37" (1 meter) wide	ASTM D 2178	Type IV asphalt impregnated glass felt with asphalt coating.
GAFGLAS® Mineral Surfaced Cap Sheet	39.37" (1 meter) wide	ASTM D 3909	Asphalt coated, glass fiber mat cap sheet surfaced with mineral granules.
GAFGLAS® EnergyCap™ Mineral Surfaced Cap Sheet	39.37" (1 meter) wide	ASTM D 3909	Asphalt coated, glass fiber mat cap sheet surfaced with mineral granules with factory applied layer of TOPCOAT® EnergyCote™.
GAFGLAS® STRATAVENT® Eliminator™ Perforated	39.37" (1 meter) wide	ASTM D 4897 D 3672	Fiberglass base sheet impregnated and coated on both sides with asphalt. Surfaced on the bottom side with mineral granules embedded in asphaltic coating with factory perforations.
GAFGLAS® Flashing	Various		Asphalt coated glass fiber mat flashing sheet available in three sizes.
GAFGLAS® STRATAVENT® Eliminator™ Nailable	39.37" (1 meter) wide	ASTM D 4897 D 3672	Fiberglass base sheet impregnated and coated on both sides with asphalt. Surfaced on the bottom side with mineral granules embedded in asphaltic coating.
RUBEROID® SBS Heat-Weld™ Smooth	1 meter (39.37") wide	ASTM D-6164	Non-Woven Polyester mat coated with polymer-modified asphalt and smooth surfaced.
RUBEROID® SBS Heat-Weld™ Granule	1 meter (39.37") wide	ASTM D-6164	Non-Woven Polyester mat coated with polymer modified asphalt and surfaced with mineral granules.
RUBEROID® SBS Heat-Weld™ 170 FR	1 meter (39.37") wide	ASTM D-6164	Non-Woven Polyester mat coated with fire retardant polymer modified asphalt and surfaced with mineral granules.
RUBEROID® SBS Heat-Weld™ PLUS	1 meter (39.37") wide	ASTM D-6164	Non-Woven Polyester mat coated with polymer modified asphalt and surfaced with mineral granules.
RUBEROID® SBS Heat-Weld™ PLUS FR	1 meter (39.37") wide	ASTM D-6164	Non-Woven Polyester mat coated with fire retardant polymer modified asphalt and surfaced with mineral granules.
RUBEROID® SBS Heat-Weld™ 25	1 meter (39.37") wide	ASTM D-6164	Non-Woven Polyester mat coated with polymer-modified asphalt and smooth surfaced.
RUBEROID® Modified Base Sheet	39.37" (1 meter) wide	ASTM D4601, Type II, UL Type G2 BUR	Premium glass fiber reinforced SBS modified base sheet

Product	Dimensions	Test Specification	Product Description
RUBEROID® 20	39.37" (1 meter) wide	ASTM D 6163 ASTM D 5147	SBS modified asphalt base sheet and interply sheet reinforce with a glass fiber mat.
RUBEROID® Mop Granule	39.37" (1 meter) wide	ASTM D 6222 ASTM D 5147	Non-woven polyester mat coated with polymer modified asphalt and surfaced with mineral granules.
RUBEROID® Mop Plus (Granule)	39.37" (1 meter) wide	ASTM D 6222 ASTM D 5147	Non-woven polyester mat coated with polymer modified asphalt and surfaced with mineral granules.
RUBEROID® MOP Smooth	39.37" (1 meter) wide	ASTM D 6164 ASTM D 5147	Non-woven polyester mat coated with polymer-modified asphalt and smooth surfaced.
RUBEROID® MOP 170FR	39.37" (1 meter) wide	ASTM D 6164 ASTM D 5147	Non-Woven polyester mat coated with fire retardant polymer modified asphalt and surfaced with mineral granules.
RUBEROID® MOP FR	39.37" (1 meter) wide	ASTM D 6164 ASTM D 5147	Non-Woven polyester mat coated with fire retardant polymer modified asphalt and surfaced with mineral granules.
RUBEROID® TORCH Smooth	39.37" (1 meter) wide	ASTM D 5147	Heavy duty, polyester reinforced, asphalt modified bitumen membrane, smooth surface.
RUBEROID® TORCH Granule	39.37" (1 meter) wide	ASTM D 5147	Asphalt impregnated, coated felt, surfaced with mineral granule.
RUBEROID® TORCH PLUS (Granule)	39.37" (1 meter) wide	ASTM D 6222 ASTM D 5147	Heavy duty, polyester reinforced, asphalt modified bitumen membrane, granule surface.
RUBEROID® TORCH FR	39.37" (1 meter) wide	ASTM D 6222 ASTM D 5147	Heavy duty, polyester reinforced, coated with fire retardant asphalt modified bitumen membrane, granule surface.
RUBEROID® 170FR TORCH	39.37" (1 meter) Wide	ASTM D 6222 ASTM D 5147	Heavy duty, polyester reinforced, coated with fire retardant asphalt modified bitumen membrane, granule surface.
RUBEROID® 30	39.37" (1 meter) wide	ASTM D 6163 ASTM D 5147	Non-woven fiberglass mat coated with polymer modified asphalt and surfaced with mineral granules.
RUBEROID® 30 FR	39.37" (1 meter) wide	ASTM D 6163 ASTM D 5147	Non-woven fiberglass mat coated with fire retardant polymer modified asphalt and surfaced with mineral granules.
RUBEROID® ULTRACLAD®	39.37" (1 meter) wide	ASTM D 6298 ASTM D 5147	Woven fiberglass mat coated with Polymer modified asphalt and surfaced with aluminum, copper or stainless steel foil.
RUBEROID® Dual FR	39.37" (1 meter) Wide	ASTM D 6164 ASTM D 5147	Non-woven polyester and fiberglass mat coated with file retardant, polymer modified asphalt and surfaced with mineral granules.
Vent Stacks (metal and plastic)		TAS 100(A) ASTM D 1929 ASTM D 635	One way valve vent used to relieve built-up pressure within the roof system. GAF Vent Stacks are available in metal or plastic.

Product	Dimensions	Test Specification	Product Description
Leak Buster™ Matrix™ 302 Non Fibered Aluminum Roof Coating	5 gallons	ASTM D2824, Type I	Non-fibered aluminum pigmented, asphalt roof coating.
GAF Built-Up Roofing Asphalt	100 lb. cartons, bulk	ASTM D312, Types I, II, III and IV	Interply mopping and surfacing asphalt.
RUBEROID® MOD Asphalt, Asphalt L & Asphalt P	60 lb. kegs		SEBS modified asphalt.
Leak Buster™ Matrix™ 602	5 gallons		Surface coating for smooth surfaced and mineral surfaced roofs.
Leak Buster™ Matrix™ 715	5 gallons		Surface coating for smooth surfaced and mineral surfaced roofs.
LeakBuster™ Matrix™ 531 WeatherCote™	2 gallons		Surface coating for smooth surfaced and mineral surfaced roofs.
SeamCote™	2, 5 gallons	proprietary	Elastomeric roofing membrane.
FireOut™	5, 55 gallons		Low VOC, fire barrier coating.
VersaShield®	350 sq ft. roll		Non-Asphaltic Fiberglass-Based Underlayment.
VersaShield® FB-1S	350 sq ft. roll		Non-Asphaltic Fiberglass-Based Underlayment.
VersaShield® FB-2S	350 sq ft. roll		Non-Asphaltic Fiberglass-Based Underlayment.
TOPCOAT® FireShield® MB	5, 55 gallons	ASTM D-412 ASTM D-21-96 ASTM D1475 ASTM E-1644	Elastomeric roofing membrane
Leak Buster™ Matrix™ 201 SBS Flashing Cement	5 gallons	ASTM D3019	Cold Applied Modified SEBS Asphalt Adhesive – Flashing Grade.
Leak Buster™ Matrix™ 102 SBS Adhesive	5 gallons	ASTM D3019	Cold Applied Modified SEBS Asphalt Adhesive.
Leak Buster™ Matrix™ 202 SBS Flashing Cement	5 gallons	ASTM D4586	Cold Applied Modified SEBS Asphalt Adhesive – Flashing Grade.
Leak Buster™ Matrix™ 203 Plastic Roof Cement	5 gallons	ASTM D4586	Standard Plastic Asphalt Roofing Cement
Leak Buster™ Matrix™ 103 Cold Process Adhesive	5 gallons	ASTM D3019	Cold Applied Asphalt Adhesive.

Product	Dimensions	Test Specification	Product Description
Leak Buster™ Matrix™ 303 Fibered Aluminum Roof Coating	5 gallons	ASTM D 2824	Fibered aluminum coating.
Leak Buster™ Matrix™ 304 Non Fibered Aluminum Roof Coating	5 gallons	ASTM D2824, Type I	Non-fibered aluminum pigmented, asphalt roof coating.

APPROVED INSULATIONS:

Table 2

Product Name	Product Description	Manufacturer (With Current NOA)
EnergyGuard™ RA, RN	Polyisocyanurate foam insulation	BMCA
Composite A & N	Polyisocyanurate foam insulation with high density fiberboard or Permalite perlite insulation.	GAF Materials Corp.
EnergyGuard™ Fiberboard	Fiberboard insulation.	GAF Materials Corp.
EnergyGuard™ Permalite	Perlite insulation board.	GAF Materials Corp.
EnergyGuard™ GAFCANT™	Cut perlite board	GAF Materials Corp.
EnergyGuard™ Permalite Recover Board	Perlite recover board	GAF Materials Corp.
EnergyGuard™ Tapered Edge Strip	Tapered perlite board	GAF Materials Corp.
EnergyGuard™ Perlite	Perlite insulation board	GAF Materials Corp.
EnergyGuard™ High Density Fiberboard	High density wood fiberboard insulation.	GAF Materials Corp.
EnergyGuard™ Composite	Polyisocyanurate/wood fiberboard composite	BMCA
EnergyGuard™ Composite RA	Polyisocyanurate/wood fiberboard composite	BMCA
Wood Fiber	Wood fiber insulation board	generic
High Density Wood Fiberboard	Wood fiber insulation board	generic
Perlite Insulation	Perlite insulation board	generic
Dens Deck®, Dens Deck® Prime, Dens Deck® Dura Guard™	Water resistant gypsum board	G-P Gypsum Corp
Structodek	Wood fiber insulation board	Knight Celotex
Securock™	Fiber reinforced roof board	USG Corporation

APPROVED FASTENERS:

TABLE 3

Fastener Number	Product Name	Product Description	Dimensions	Manufacturer (With Current NOA)
1.	Drill-Tec™ #12 Standard, #14 and #15 extra Heavy Duty Fastener , Heavy Duty Roofing Fastener	Insulation fastener and Base Play fastener for steel, wood & concrete decks.	Various	GAF Materials Corp.
2.	Drill-Tec™ ASAP	Pre-assembled Drill-Tec™ Fasteners and metal and plastic plates.	Various	GAF Materials Corp.
3.	Drill-Tec™ #12 or #14 Standard screws with AccuTrac Plate	Base sheet fastening assembly.	Various	GAF Materials Corp.
4.	Drill-Tec™ Galvalume Plates	Round Galvalume stress plates.	3" and 3 ½"	GAF Materials Corp.
5.	Drill-Tec™ Polypropylene Plates	Round polypropylene stress plates.	3" and 3 ½"	GAF Materials Corp.
6.	Drill-Tec™ AccuTrac Plate	Square Galvalume® coated steel plate.	3" Square	GAF Materials Corp.

EVIDENCE SUBMITTED:

Test Agency	Test Identifier	Description	Date
Factory Mutual Research Corp.	J.I. 2B8A4.AM	4470	07.02.97
	J.I. 3B9Q1.AM	4470	01.08.98
	J.I. 0D0A8.AM	4470	07.09.99
	J.I. 0D1A8.AM	4470 - TAS 114	07.29.94
	J.I. 0Y9Q5.AM	4470 - TAS 114	04.01.98
	3029832	4470 - TAS 114	05.11.07
PRI Asphalt Technologies, Inc.	GAF-012-02-02	Physical Properties	11.06.01
	GAF-020-02-01	ASTM D 4977	02.01.02
IRT of S. Fl.	02-005	TAS 114	01.18.02
	02-014	TAS 114	03.22.02

APPROVED ASSEMBLIES

Deck Type 1I: Wood, Insulated

Deck Description: $^{19}/_{32}$" or greater plywood or wood plank

System Type A: Anchor sheet mechanically fastened, all layers of insulation adhered with approved asphalt.

All General and System Limitations shall apply.

One or more layers of any of the following insulations. .

Insulation Layer (Table 2) (When applicable: Steel plate only =S, plastic plate only =P)	**Insulation Fasteners (Table 3)**	**Fastener Density/ft^2**
EnergyGuard™, EnergyGuard™ Composite, EverGuard® ISO, EnergyGuard™ RA, EnergyGuard™ RA Composite		
Minimum 1" thick	N/A	N/A
EnergyGuard™ High Density Wood Fiber, EnergyGuard™ Recover Board, Wood Fiber,		
Minimum ½" thick	N/A	N/A
EnergyGuard™ Perlite		
Minimum ¾" thick	N/A	N/A
Fiberglas (Min. $^{15}/_{16}$" thick)	N/A	N/A

Note: All insulation shall be adhered to the anchor sheet in full mopping of approved hot asphalt within the EVT range and at a rate of 20-40 lbs/100 ft^2. Please refer to Roofing Application Standard RAS 117 for insulation attachment. Insulation listed as base layer only shall be used only as base layers with a second layer of approved top layer insulation installed as the final membrane substrate. Composite insulation panels may be used as a top layer placed with the polyisocyanurate side facing down. GAF requires either a ply of GAFGLAS® STRATAVENT® Eliminator™ Perforated laid dry or a layer of EnergyGuard™ Perlite or wood fiber overlay board on all isocyanurate applications.

Fire Barrier: (optional) FireOut™ Fire Barrier Coating, VersaShield® Non-Asphaltic Fiberglass-Based Underlayment or Securock™.

Anchor sheet: GAFGLAS® #80 ULTIMA™ Base Sheet, STRATAVENT® Eliminator™ Nailable, RUBEROID® Modified Base Sheet, RUBEROID® 20, RUBEROID Heat-Weld™ Smooth or RUBEROID® Heat-Weld™ 25 base sheet mechanically fastened as described below;

Fastening Options: GAFGLAS® Ply 4, GAFGLAS® Flex Ply™ 6, GAFGLAS® #75 Base Sheet or any of above Anchor sheets attached to deck with approved annular ring shank nails and tin caps at a fastener spacing of 9" o.c. at the lap staggered and in two rows 12" o.c. in the field.
(Maximum Design Pressure –45 psf, See General Limitation #7)

Fastening Options: GAFGLAS® Ply 4, GAFGLAS® Flex Ply™ 6, GAFGLAS® #75 Base Sheet or any of above Anchor sheets attached to deck with Drill-Tec™ #12 standard, #14 or # 15 Screws and 3" Drill-Tec™ steel plate or Drill-Tec™ AccuTrac Plates, 12" o.c. in 3 rows. One row is in the 2" side lap. The other rows are equally spaced approximately 12" o.c. in the field of the sheet.
(Maximum Design Pressure –45 psf, See General Limitation #7)

GAFGLAS® Flex Ply™ 6, GAFGLAS® #75 Base Sheet or any of above Anchor sheets attached to deck with approved annular ring shank nails and tin caps at a fastener spacing of 9" o.c. at the 4" lap staggered and in two rows 9" o.c. in the field.
(Maximum Design Pressure –52.5 psf, See General Limitation #7)

GAFGLAS® #80ULTIMA™, RUBEROID® 20, RUBEROID® Mop Smooth, base sheet attached to deck with approved 1¼" annular ring shank nails and inverted 3" steel plate at a fastener spacing of 9" o.c. at the 4" lap and in two rows staggered with a fastener spacing of 9" o.c. in the center of the membrane.
(Maximum Design Pressure –60 psf, See General Limitation #7)

GAFGLAS® #75 Base Sheet or any of above Anchor sheets attached to deck with Drill-Tec™ #12 standard, #14 or # 15 Screws and 3" Drill-Tec™ steel plate or Drill-Tec™ AccuTrac Plates, 12" o.c. in 4 rows. One row is in the 2" side lap. The other rows are equally spaced approximately 9" o.c. in the field of the sheet.
(Maximum Design Pressure –60 psf, See General Limitation #7)

Any of above Anchor sheets attached to deck approved annular ring shank nails and 3" inverted Drill-Tec™ insulation plates at a fastener spacing of 9" o.c. at the 4" lap staggered in two rows 9" in the field.
(Maximum Design Pressure –60 psf, See General Limitation #7)

GAFGLAS® #75 Base Sheet or any of above Anchor sheets attached to deck with Drill-Tec™ #12 standard, #14 or # 15 Screws and 3" Drill-Tec™ steel plate or Drill-Tec™ AccuTrac Plates, 8" o.c. in 4 rows. One row is in the 2" side lap. The other rows are equally spaced approximately 9" o.c. in the field of the sheet.
(Maximum Design Pressure –75 psf, See General Limitation #7)

Base Sheet: (Optional) Install one ply of GAFGLAS® #75, GAFGLAS® #80 **ULTIMA™** Base Sheet, GAFGLAS® STRATAVENT® Eliminator™ Perforated, RUBEROID® Modified Base Sheet, RUBEROID® Mop Smooth, RUBEROID® 20 RUBEROID® Heat-Weld™ Smooth or RUBEROID® Heat-Weld™ directly over the top layer of insulation. Adhere with any approved mopping asphalt applied within the EVT range and at a rate of 20-40 lbs./sq; (see General Limitation #4).

Ply Sheet: One or more plies GAFGLAS® PLY 4, GAFGLAS® Flex Ply™ 6 sheet, #80 Ultima, RUBEROID® Mop Smooth or RUBEROID® 20 adhered in a full mopping of approved asphalt applied within the EVT range and at a rate of 20-40 lbs./sq.

Cap Sheet: (Optional) One ply of GAFGLAS® Mineral Surfaced Cap Sheet or GAFGLAS® EnergyCap™ Mineral Surfaced Cap Sheet adhered in a full mopping of approved asphalt applied within the EVT range and at a rate of 20-40 lbs./sq.

Surfacing: (Optional, required if RUBEROID® MOP Smooth or RUBEROID® 20 is top membrane) Install one of the following:

1. Gravel or slag applied at 400 lbs./sq. and 300 lbs./sq. respectively in a flood coat of approved asphalt at 60 lbs./sq. or applied in a flood coat of Leak Buster™ Matrix™ 103 Cold Process Adhesive applied at a rate of 3 gal./sq.
2. GAFGLAS® Mineral Surfaced Cap Sheet, GAFGLAS® Energy Cap Mineral Surfaced Capsheet adhered in a full mopping of approved asphalt applied within the EVT range and at a rate of 20-40 lbs./sq.
3. Leak Buster™ Matrix™ 303 Premium Fibered Aluminum Roof Coating, at 1.5 gal./sq.
4. Leak Buster™ Matrix™ 715 , Leak Buster™ Matrix™ 322, TOPCOAT® MB+, TOPCOAT® Fireshield Elastomeric Roofing Membrane, applied at 1 to 1.5 gal./sq.
5. Leak Buster™ Matrix™ 602 MB Xtra Elastomeric Roofing Membrane, EnergyCote® roof coating applied at 1 to 1.5 gal./sq.
6. TOPCOAT® Surface Seal, TOPCOAT® Fireshield® SB Solvent based Elastomeric Roofing Membrane applied at 1to 1.5 gal./sq
7. Advance Green Technologies Photovoltaic Laminate solar energy collector auxiliary roof equipment installed in compliance with manufacturer's specifications and applicable Building Codes.

Maximum Design Pressure: See Fastening above.

Deck Type 1I: Wood, Insulated

Deck Description: 19/32" or greater plywood or wood plank

System Type B: Optional base sheet laid dry; base layer of insulation mechanically fastened, optional top layer adhered with approved asphalt.

All General and System Limitations shall apply.

One or more layers of any of the following insulations.

Insulation for Base Layer (Table 2) **When applicable: Steel plate only =S, plastic plate only =P**	**Insulation Fasteners (Table 3)**	**Fastener Density/ft²**
EnergyGuard™, EnergyGuard™ RA Minimum 1.3" thick	1, 2, or 3	1:3 ft²
EnergyGuard™ RN Minimum 1.4" thick	1, 2, or 3	1:3 ft²
EnergyGuard™ Composite, EnergyGuard™ RA Composite Minimum 1.5 thick	3	1:3 ft²
EnergyGuard™ Perlite Minimum ¾" thick	1S(3.5"), or 3	1:2 ft²
EnergyGuard™ Fiberboard, EnergyGuard™ High Density Fiberboard Minimum 1" thick	1, 2, or 3	1:4 ft²

Note: Base layer shall be mechanically attached with fasteners and density described. Insulation panels listed are minimum sizes and dimensions; if larger panels are used the number of fasteners per board shall be increased maintaining the same fastener density (See Roofing Application Standard RAS 117 for fastening details). GAF requires either a ply of GAFGLAS® STRATAVENT® Eliminator™ perforated laid dry or a layer of EnergyGuard™ or wood fiber overlay board on all isocyanurate applications.

Insulation for Top Layer (Table 2) **When applicable: Steel plate only =S, plastic plate only =P**	**Insulation Fasteners (Table 3)**	**Fastener Density/ft²**
Any of the insulations listed for Base Layer, above.	**N/A**	**N/A**
EnergyGuard™ High Density Wood Fiber, EnergyGuard™ High Density Wood Fiberboard, EnergyGuard™ Recover Board Minimum ½" thick	N/A	N/A

Note: Optional top layer of insulation shall be adhered with approved asphalt within the EVT range and at a rate of 20-40 lbs/100 ft². Please refer to Roofing Application Standard RAS 117 for insulation attachment. Composite insulation boards used as a top layer shall be installed with the polyisocyanurate face down.

Fire Barrier: (optional) FireOut™ Fire Barrier Coating, VersaShield® Non-Asphaltic Fiberglass-Based Underlayment or Securock™.

Base Sheet: (Optional) Install one ply of GAFGLAS® #75, GAFGLAS® #80 ULTIMA™ Base Sheet, GAFGLAS® PLY 4, GAFGLAS® Flex Ply™ 6, GAFGLAS® STRATAVENT® Eliminator Perforated(laid dry), RUBEROID® Modified Base Sheet, RUBEROID® Mop Smooth or RUBEROID® 20 directly over the top layer of insulation. Adhere with any approved mopping asphalt applied within the EVT range and at a rate of 20-40 lbs./sq; (see General Limitation #4).

Ply Sheet: Two or more plies of GAFGLAS®, PLY 4, GAFGLAS® FlexPly™ 6 ply sheet, #80 Ultima, RUBEROID® Mop Smooth or RUBEROID® 20 adhered in a full mopping of approved asphalt applied within the EVT range and at a rate of 20-40 lbs./sq. (See specification number for appropriate number of plies).

Cap Sheet: (Optional) One ply of GAFGLAS® Mineral Surfaced Cap Sheet or GAFGLAS® EnergyCap™ Mineral Surfaced Cap Sheet adhered in a full mopping of approved asphalt applied within the EVT range and at a rate of 20-40 lbs./sq. (See GAF application instructions for approved method of installation).

Surfacing: (Optional, required if RUBEROID® MOP Smooth or RUBEROID® 20 is top membrane) Install one of the following:

1. Gravel or slag applied at 400 lbs./sq. and 300 lbs./sq. respectively in a flood coat of approved asphalt at 60 lbs./sq. or applied in a flood coat of Leak Buster™ Matrix™ 103 Cold Process Adhesive applied at a rate of 3 gal./sq.
2. GAFGLAS® Mineral Surfaced Cap Sheet, GAFGLAS® Energy Cap Mineral Surfaced Capsheet adhered in a full mopping of approved asphalt applied within the EVT range and at a rate of 20-40 lbs./sq.
3. Leak Buster™ Matrix™ 303 Premium Fibered Aluminum Roof Coating, at 1.5 gal./sq.
4. Leak Buster™ Matrix™ 715 , Leak Buster™ Matrix™ 322, TOPCOAT® MB+, TOPCOAT® Fireshield Elastomeric Roofing Membrane, applied at 1 to 1.5 gal./sq.
5. Leak Buster™ Matrix™ 602 MB Xtra Elastomeric Roofing Membrane, EnergyCote® roof coating applied at 1 to 1.5 gal./sq.
6. TOPCOAT® Surface Seal, TOPCOAT® Fireshield® SB Solvent based Elastomeric Roofing Membrane applied at 1to 1.5 gal./sq
7. Advance Green Technologies Photovoltaic Laminate solar energy collector auxiliary roof equipment installed in compliance with manufacturer's specifications and applicable Building Codes.

Maximum Design Pressure: **-45 psf;** (See General Limitation #7)

8MO

02·10·20

Deck Type 1I: Wood, Insulated

Deck Description: $^{19}/_{32}$" or greater plywood or wood plank

System Type C: One or more layers of insulation simultaneously attached; Base layer optional.

All General and System Limitations shall apply.

One or more layers of any of the following insulations.

Insulation for Base Layer (Table 2) **(When applicable: Steel plate only =S, platic plate only =P)**	**Insulation Fasteners (Table 3)**	**Fastener Density/ft²**
EnergyGuard™ RN, EnergyGuard™, EnergyGuard™ RA Minimum 1.3" thick	N/A	N/A
EnergyGuard™ Min. 1.4" thick	N/A	N/A
EnergyGuard™ Composite, EnergyGuard™ RA Composite Minimum 1.5" thick	N/A	N/A
EnergyGuard™ Perlite Minimum ¾" thick	N/A	N/A
Wood Fiber, EnergyGuard™ Fiberboard, EnergyGuard™ High Density Fiberboard Minimum 1" thick	N/A	N/A

Note: All layers shall be simultaneously fastened; see top layer below for fasteners and density. Insulation panels listed are minimum sizes and dimensions; if larger panels are used, the number of fasteners shall be increased maintaining the same fastener density. Please refer to Roofing Application Standard RAS 117 for insulation attachment. GAF requires either a ply of GAFGLAS® STRATAVENT® Eliminator™ perforated laid dry or a layer of EnergyGuard™ Perlite or wood fiber overlay board on all isocyanurate applications.

Insulation for Top Layer (Table 2) **When applicable: Steel plate only =S, plastic plate only =P**	**Insulation Fasteners (Table 3)**	**Fastener Density/ft²**
EnergyGuard, EnergyGuard RA Minimum 1.3" thick	1, 2, or 3	1:3 ft²
EnergyGuard™ RN Minimum 1.4" thick	1, 2, or 3	1:3 ft²
EnergyGuard™ Composite, EnergyGuard™ RA Composite Minimum 1.5 thick	3	1:3 ft²
EnergyGuard™ Perlite Minimum ¾" thick	1S(3.5"), or 3	1:2 ft²
Fiberglas Minimum $^{15}/_{16}$" thick	1, 2, or 3	1:2.67 ft²
Wood Fiber, EnergyGuard™ Fiberboard, EnergyGuard™ High Density Fiberboard Minimum 1" thick	1, 2, or 3	1:4 ft²

Note: Insulation panels listed are minimum sizes and dimensions; if larger panels are used, the number of fasteners shall be increased maintaining the same fastener density. Please refer to Roofing Application Standard RAS 117 for insulation attachment. GAF requires either a ply of GAFGLAS® STRATAVENT® Eliminator™ Perforated laid dry or a layer of EnergyGuard™ Perlite or wood fiber overlay board on all isocyanurate applications.

Fire Barrier: (optional) FireOut™ Fire Barrier Coating, VersaShield® Non-Asphaltic Fiberglass-Based Underlayment or Securock™.

Base Sheet: (Optional) Install one ply of GAFGLAS® #75, GAFGLAS® #80 ULTIMA™ Base Sheet, GAFGLAS® PLY 4, GAFGLAS FlexPly™ 6, GAFGLAS® STRATAVENT® Eliminator™ Perforated (laid dry), RUBEROID® Modified Base Sheet, RUBEROID® Mop Smooth or RUBEROID® 20 directly over the top layer of insulation. Adhere with any approved mopping asphalt applied within the EVT range and at a rate of 20-40 lbs./sq.. If base sheet is applied directly to polyisocyanurate insulation only a spot or strip mopped application as detailed in this approval the use of an overlay board is approved; see General Limitation #4.

Ply Sheet: Two or more plies of GAFGLAS® PLY 4, GAFGLAS® FlexPly™ 6 ply sheet, #80 ULTIMA™, , RUBEROID® Mop Smooth or RUBEROID® 20 adhered in a full mopping of approved asphalt applied within the EVT range and at a rate of 20-40 lbs./sq.

Cap Sheet: (Optional) One ply of GAFGLAS® Mineral Surfaced Cap Sheet or GAFGLAS® EnergyCap™ Mineral Surfaced Cap Sheet adhered in a full mopping of approved asphalt applied within the EVT range and at a rate of 20-40 lbs./sq.

Surfacing: (Optional, required if RUBEROID® MOP Smooth or RUBEROID® 20 is top membrane) Install one of the following:

1. Gravel or slag applied at 400 lbs./sq. and 300 lbs./sq. respectively in a flood coat of approved asphalt at 60 lbs./sq. or applied in a flood coat of Leak Buster™ Matrix™ 103 Cold Process Adhesive applied at a rate of 3 gal./sq.
2. GAFGLAS® Mineral Surfaced Cap Sheet, GAFGLAS® Energy Cap Mineral Surfaced Capsheet adhered in a full mopping of approved asphalt applied within the EVT range and at a rate of 20-40 lbs./sq.
3. Leak Buster™ Matrix™ 303 Premium Fibered Aluminum Roof Coating, at 1.5 gal./sq.
4. Leak Buster™ Matrix™ 715 , Leak Buster™ Matrix™ 322, TOPCOAT® MB+, TOPCOAT® Fireshield Elastomeric Roofing Membrane, applied at 1 to 1.5 gal./sq.
5. Leak Buster™ Matrix™ 602 MB Xtra Elastomeric Roofing Membrane, EnergyCote® roof coating applied at 1 to 1.5 gal./sq.
6. TOPCOAT® Surface Seal, TOPCOAT® Fireshield® SB Solvent based Elastomeric Roofing Membrane applied at 1to 1.5 gal./sq
7. Advance Green Technologies Photovoltaic Laminate solar energy collector auxiliary roof equipment installed in compliance with manufacturer's specifications and applicable Building Codes.

Maximum Design Pressure: **-45 psf;** (See General Limitation #7)

ORIGINAL

Deck Type 1I: Wood, Insulated

Deck Description: $^{19}/_{32}$" or greater plywood or wood plank

System Type D: Insulation and Base sheet simultaneously

All General and System Limitations shall apply.

One or more layers of any of the following insulations.

Insulation Layer loosely laid with firmly butted joints.	**Insulation Fasteners (Table 3)**	**Fastener Density/ft^2**
EnergyGuard™, EnergyGuard™ RA, Minimum 1.3" thick	N/A	N/A
EnergyGuard™ High Density Fiberboard, EnergyGuard™ Fiberboard Minimum 1" thick	N/A	N/A

Fire Barrier: (optional) FireOut™ Fire Barrier Coating, VersaShield® Non-Asphaltic Fiberglass-Based Underlayment or Securock™.

Base Sheet: Install one ply of GAFGLAS® #75, GAFGLAS® #80 Ultima ULTIMA™ Base Sheet, GAFGLAS® STRATAVENT® Eliminator™ Nailable or RUBEROID® 20 base sheet applied over the loose laid insulation with 2" side laps mechanically fastened as described below;

Fastening Options: Drill-Tec™ #12 standard, #14 or # 15 Screws and 3" Drill-Tec™ steel plate or Drill-Tec™ AccuTrac Plates are installed through the base sheet and insulation in 3 rows 12" o.c. One row is in the 2" side lap. The other rows are equally spaced approximately 12" o.c. in the field of the sheet.
(Maximum Design Pressure –45 psf, See General Limitation #7)

Drill-Tec™ #12 standard, #14 or # 15 Screws and 3" Drill-Tec™ steel plate or Drill-Tec™ AccuTrac Plates are installed through the base sheet and insulation in 4 rows 8" o.c. One row is in the 2" side lap. The other 3 rows are equally spaced approximately 9" o.c. in the field of the sheet.
(Maximum Design Pressure –75 psf, See General Limitation #7)

GAFGLAS® #80ULTIMA™, RUBEROID® 20, RUBEROID® Mop Smooth, base sheet attached to deck with approved annular ring shank nails with a minimum embedment of 1" into the wood substrate and inverted 3" steel plate at a fastener spacing of 9" o.c. at the 4" lap and in two rows staggered with a fastener spacing of 9" o.c. in the center of the membrane.
(Maximum Design Pressure –60 psf, See General Limitation #7)

Drill-Tec™ #12 standard, #14 or # 15 Screws and 3" Drill-Tec™ steel plate or Drill-Tec™ AccuTrac Plates in 4 rows 12" o.c. One row is in the 2" side lap. The other rows are equally spaced approximately 9" o.c. in the field of the sheet.
(Maximum Design Pressure –60 psf, See General Limitation #7)

Ply Sheet: One or more plies GAFGLAS® PLY 4, GAFGLAS®, GAFGLAS® FlexPly™ 6 sheet, #80 Ultima or RUBEROID® 20adhered in a full mopping of approved asphalt applied within the EVT range and at a rate of 20-40 lbs./sq.

Cap Sheet: (Optional) One ply of GAFGLAS® Mineral Surfaced Cap Sheet or GAFGLAS® EnergyCap™ Mineral Surfaced Cap Sheet adhered in a full mopping of approved asphalt applied within the EVT range and at a rate of 20-40 lbs./sq.

Surfacing: (Optional, required if RUBEROID® MOP Smooth or RUBEROID® 20 is top membrane) Install one of the following:

1. Gravel or slag applied at 400 lbs./sq. and 300 lbs./sq. respectively in a flood coat of approved asphalt at 60 lbs./sq. or applied in a flood coat of Leak Buster™ Matrix™ 103 Cold Process Adhesive applied at a rate of 3 gal./sq.
2. GAFGLAS® Mineral Surfaced Cap Sheet, GAFGLAS® Energy Cap Mineral Surfaced Capsheet adhered in a full mopping of approved asphalt applied within the EVT range and at a rate of 20-40 lbs./sq.
3. Leak Buster™ Matrix™ 303 Premium Fibered Aluminum Roof Coating, at 1.5 gal./sq.
4. Leak Buster™ Matrix™ 715 , Leak Buster™ Matrix™ 322, TOPCOAT® MB+, TOPCOAT® Fireshield Elastomeric Roofing Membrane, applied at 1 to 1.5 gal./sq.
5. Leak Buster™ Matrix™ 602 MB Xtra Elastomeric Roofing Membrane, EnergyCote® roof coating applied at 1 to 1.5 gal./sq.
6. TOPCOAT® Surface Seal, TOPCOAT® Fireshield® SB Solvent based Elastomeric Roofing Membrane applied at 1to 1.5 gal./sq.
7. Advance Green Technologies Photovoltaic Laminate solar energy collector auxiliary roof equipment installed in compliance with manufacturer's specifications and applicable Building Codes.

Maximum Design Pressure: See Fastening Above

Deck Type 1: Wood, Non-insulated

Deck Description: $^{19}/_{32}$" or greater plywood or wood plank decks

System Type E: Base sheet mechanically fastened.

All General and System Limitations shall apply.

Fire Barrier: (optional) FireOut™ Fire Barrier Coating, VersaShield® Non-Asphaltic Fiberglass-Based Underlayment or Securock™.

Base sheet: GAFGLAS® #80 ULTIMA™ Base Sheet, STRATAVENT® Eliminator™ Nailable, RUBEROID® Modified Base Sheet, RUBEROID® 20, RUBEROID® Heat-Weld™ Smooth or RUBEROID® Heat-Weld™ 25 base sheet mechanically fastened to deck as described below;

Fastening Options: GAFGLAS® Ply 4, GAFGLAS® Flex Ply™ 6, GAFGLAS® #75 Base Sheet or any of above Base sheets attached to deck with approved annular ring shank nails and tin caps at a fastener spacing of 9" o.c. at the lap staggered and in two rows 12" o.c. in the field.
(Maximum Design Pressure –45 psf, See General Limitation #7)

GAFGLAS® Ply 4, GAFGLAS® Flex Ply™ 6, GAFGLAS® #75 Base Sheet or any of above Base sheets attached to deck with Drill-Tec™ #12 standard, #14 or # 15 Screws and 3" Drill-Tec™ steel plate or Drill-Tec™ AccuTrac Plates, 12" o.c. in 3 rows. One row is in the 2" side lap. The other rows are equally spaced approximately 12" o.c. in the field of the sheet.
(Maximum Design Pressure –45 psf, See General Limitation #7)

GAFGLAS® Flex Ply™ 6, GAFGLAS® #75 Base Sheet or any of above Base sheets attached to deck with approved annular ring shank nails and tin caps at a fastener spacing of 9" o.c. at the 4" lap staggered and in two rows 9" o.c. in the field.
(Maximum Design Pressure –52.5 psf, See General Limitation #7)

GAFGLAS® #80ULTIMA™, RUBEROID® 20, RUBEROID® Mop Smooth, base sheet attached to deck with approved 1¼" annular ring shank nails and inverted 3" steel plate at a fastener spacing of 9" o.c. at the 4" lap and in two rows staggered with a fastener spacing of 9" o.c. in the center of the membrane.
(Maximum Design Pressure –60 psf, See General Limitation #7)

GAFGLAS® #75 Base Sheet or any of above Base sheets attached to deck with Drill-Tec™ #12 standard, #14 or # 15 Screws and 3" Drill-Tec™ steel plate or Drill-Tec™ AccuTrac Plates, 12" o.c. in 4 rows. One row is in the 2" side lap. The other rows are equally spaced approximately 9" o.c. in the field of the sheet.
(Maximum Design Pressure –60 psf, See General Limitation #7)

Any of above Base sheets attached to deck approved annular ring shank nails and 3" inverted Drill-Tec™ insulation plates at a fastener spacing of 9" o.c. at the 4" lap staggered in two rows 9" in the field.
(Maximum Design Pressure –60 psf, See General Limitation #7)

END

02.07.09

GAFGLAS® #75 Base Sheet or any of above Base sheets attached to deck with Drill-Tec™ #12 standard, #14 or # 15 Screws and 3" Drill-Tec™ steel plate or Drill-Tec™ AccuTrac Plates, 8" o.c. in 4 rows. One row is in the 2" side lap. The other rows are equally spaced approximately 9" o.c. in the field of the sheet. ***(Maximum Design Pressure –75 psf, See General Limitation #7)***

Ply Sheet: Two One or more plies of GAFGLAS® PLY 4, #80 ULTIMA, RUBEROID® MOP Smooth or RUBEROID® 20 adhered in a full mopping of approved asphalt applied within the EVT range and at a rate of 20-40 lbs./sq.

Cap Sheet: (Optional) One ply of GAFGLAS® Mineral Surfaced Cap Sheet or GAFGLAS® EnergyCap™ Mineral Surfaced Cap Sheet adhered in a full mopping of approved asphalt applied within the EVT range and at a rate of 20-40 lbs./sq.

Surfacing: (Optional, required if RUBEROID® MOP Smooth or RUBEROID® 20 is top membrane) Install one of the following:

1. Gravel or slag applied at 400 lbs./sq. and 300 lbs./sq. respectively in a flood coat of approved asphalt at 60 lbs./sq. or applied in a flood coat of Leak Buster™ Matrix™ 103 Cold Process Adhesive applied at a rate of 3 gal./sq.
2. GAFGLAS® Mineral Surfaced Cap Sheet, GAFGLAS® Energy Cap Mineral Surfaced Capsheet adhered in a full mopping of approved asphalt applied within the EVT range and at a rate of 20-40 lbs./sq.
3. Leak Buster™ Matrix™ 303 Premium Fibered Aluminum Roof Coating, at 1.5 gal./sq.
4. Leak Buster™ Matrix™ 715 , Leak Buster™ Matrix™ 322, TOPCOAT® MB+, TOPCOAT® Fireshield Elastomeric Roofing Membrane, applied at 1 to 1.5 gal./sq.
5. Leak Buster™ Matrix™ 602 MB Xtra Elastomeric Roofing Membrane, EnergyCote® roof coating applied at 1 to 1.5 gal./sq.
6. TOPCOAT® Surface Seal, TOPCOAT® Fireshield® SB Solvent based Elastomeric Roofing Membrane applied at 1to 1.5 gal./sq
7. Advance Green Technologies Photovoltaic Laminate solar energy collector auxiliary roof equipment installed in compliance with manufacturer's specifications and applicable Building Codes.

Maximum Design Pressure: See Fastening Above

02 02 00

WOOD DECK SYSTEM LIMITATIONS:

1 A slip sheet is required with Ply 4 and Flex Ply™ 6 when used as a mechanically fastened base or anchor sheet.
2. Minimum ¼" Dens Deck™ or ½" Type X gypsum board is acceptable to be installed directly over the wood deck.

GENERAL LIMITATIONS:

1. Fire classification is not part of this acceptance, refer to a current Approved Roofing Materials Directory for fire ratings of this product.
2. Insulation may be installed in multiple layers. The first layer shall be attached in compliance with Product Control Approval guidelines. All other layers shall be adhered in a full mopping of approved asphalt applied within the EVT range and at a rate of 20-40 lbs./sq., or mechanically attached using the fastening pattern of the top layer
3. All standard panel sizes are acceptable for mechanical attachment. When applied in approved asphalt, panel size shall be 4' x 4' maximum.
4. An overlay and/or recovery board insulation panel is required on all applications over closed cell foam insulations when the base sheet is fully mopped. If no recovery board is used the base sheet shall be applied using spot mopping with approved asphalt, 12" diameter circles, 24" o.c.; or strip mopped 8" ribbons in three rows, one at each sidelap and one down the center of the sheet allowing a continuous area of ventilation. Encircling of the strips is not acceptable. A 6" break shall be placed every 12' in each ribbon to allow cross-ventilation. Asphalt application of either system shall be at a minimum rate of 12 lbs./sq. **Note: Spot attached systems shall be limited to a maximum design pressure of -45 psf.**
5. Fastener spacing for insulation attachment is based on a Minimum Characteristic Force (F') value of 275 lbf., as tested in compliance with Testing Application Standard TAS 105. If the fastener value, as field-tested, are below 275 lbf. insulation attachment shall not be acceptable.
6. Fastener spacing for mechanical attachment of anchor/base sheet or membrane attachment is based on a minimum fastener resistance value in conjunction with the maximum design value listed within a specific system. Should the fastener resistance be less than that required, as determined by the Building Official, a revised fastener spacing, prepared, signed and sealed by a Florida Registered Engineer, Architect, or Registered Roof Consultant may be submitted. Said revised fastener spacing shall utilize the withdrawal resistance value taken from Testing Application Standards TAS 105 and calculations in compliance with Roofing Application Standard RAS 117.
7. Perimeter and corner areas shall comply with the enhanced uplift pressure requirements of these areas. Fastener densities shall be increased for both insulation and base sheet as calculated in compliance with Roofing Application Standard RAS 117. Calculations prepared, signed and sealed by a Florida registered Professional Engineer, Registered Architect, or Registered Roof Consultant **(When this limitation is specifically referred within this NOA, General Limitation #9 will not be applicable.)**
8. All attachment and sizing of perimeter nailers, metal profile, and/or flashing termination designs shall conform with Roofing Application Standard RAS 111 and applicable wind load requirements.
9. The maximum designed pressure limitation listed shall be applicable to all roof pressure zones (i.e. field, perimeters, and corners). Neither rational analysis, nor extrapolation shall be permitted for enhanced fastening at enhanced pressure zones (i.e. perimeters, extended corners and corners). **(When this limitation is specifically referred within this NOA, General Limitation #7 will not be applicable.)**
10. All products listed herein shall have a quality assurance audit in accordance with the Florida Building Code and Rule 9B-72 of the Florida Administrative Code.

END OF THIS ACCEPTANCE

PUBLIC WORKS
PLAN REVIEW NOTICE
Phone 305-673-7080 Fax 305-673-7028

THIS PLAN REVIEW CONSTITUTES APPROVAL FOR OBTAINING BUILDING PERMITS ONLY.

All construction and/or use of equipment in the right-of-way and/or easements, requires a separate Public Works Department permit prior to start of construction.

Permit Requirements: Proof of existing sidewalk/swale area conditions (pictures) and/or posting of sidewalk/roadway bonds
(Public Works Inspection of the right-of-way will be required prior to final sign-off on the C.C. / C.O., or the release of bonds.)

Approved/Reviewed By: OK Date: 5-7-2009

48 HOURS PRIOR TO EXCAVATING
CONTRACTOR SHALL CALL FOR LOCATION
OF UNDERGROUND UTILITIES
SUNSHINE ONE-CALL 1-800-432-4770
CITY OF MIAMI BEACH 305-673-7080

B0902912

City of Miami Beach
Building Department
Roofing Permit
OFFICE COPY

Review Type	Initials	Date	Bond
Structural	JGG	05/08/09	N/A
Zoning	IC	5/7/09	N/A
Engineering			N/A
Public Works	OK 5-7-2009		

41
LAGORCEAR.

Engineering & Testing Co.
7450 Griffin Road, Suite 140, Davie, FL 33314
Phone: (954)581-7115, Fax: (954)581-2415
www.cebb.net

HANDLIFT RESULTS: Passed the protocol criteria of less than 3% loose. We performed the up-lift test.

T – Tested tiles and Passed;	Total Area:	53.00 squares	No. of tested Tiles:	
F – Tested tiles and Failed;	- Field Area (1):	28.00 squares	- Field Area:	33
M – Missing Tiles;	- Perimeter Area (2):	25.00 squares	- Perimeter Area:	34
B – Broken Tiles;	- No. of Corner area (3):	35	- Corner areas:	35
	-Ridge/hip areas:	194 pcs	- Ridge/Hip areas:	16

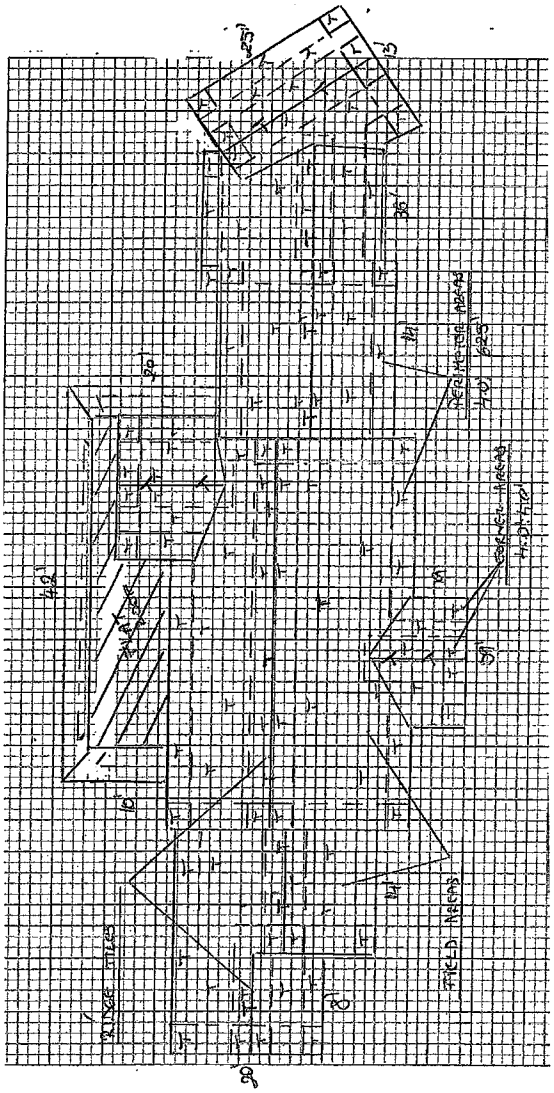

TAS 106
TESTS LOCATION SKETCH
Permit # B09-02912
Jimenez Residence
41 LaGorce Circle
Miami Beach, FL.

METALLURGICAL, INC.

Testing & Consulting Services

2870 Stirling Road • Hollywood, FL 33020-1199 • (954) 889-0089

CEBB Engineering & Testing Co. February 27, 2009

Purchase Order No. Verbal QCM Job No. 9BM-143

CALIBRATION CERTIFICATE

IMADA Digital Force Gauge
0-110
S/N 155879E

Standard Lb's	Instrument Reads Lb's
T1.0	-.9
T5.0	-4.9
T10.0	-9.9
T20.0	-19.9
T40.0	-39.9
T60.0	-60.0
T80.0	-80.0
T100.0	-100.0
C1.0	1.0
C5.0	5.0
C10.0	10.0
C20.0	20.1
C40.0	40.2
C60.0	60.3
C80.0	80.3
C100.0	100.4

Digital Force Gauge is within ± 1.0 Lb's. T=Tension, C=Compression
Calibrated with Instron Tensile Machine, Load Cell. S/N 936, QCM-414, 2 pieces. Range 0-1000 Lb's.. Accuracy at ±1.0%. N.I.S.T. # Certs #30303, 30304. Date 7/22/2008 - 7/22/2009.
Calibrated I.A.W. ANSI/NCSL Z540-1

The accuracy and calibration of this instrument are traceable to the National Institute of Standards & Technology and are guaranteed to meet published specifications.

Environmental Condition: 70°F ±3°F, approx. 50% RH.

Calibration Date = 2/27/2009

Calibration Due = 2/27/2010

Kevin Grate
Q.C. Metallurgical, Inc.

Fax (954) 241-5890 • Email: fgrate@qcmet.com