LIGHTING FIXTURES

POST LED

POWER DEVICES

PB — PULL BOX

SPD — SURGE PROTECTION DEVICE, SEE SPECIFICATIONS.

J — JUNCTION BOX

WP J — WALL MOUNTED/WEATHER PROOF JUNCTION BOX

MISCELLANEOUS SYMBOL LEGEND

1 / E200 — TITLE — SCALE: — DETAIL NUMBER; DETAIL TITLE REFERENCE; SHEET NUMBER WHERE DETAIL IS REFERENCED; ADDITIONAL SHEET REFERENCES

XX / XX.XX — DETAIL NUMBER; SHEET NUMBER TO WHERE DETAIL IS REFERENCED

POWER DISTRIBUTION

120/208V PANELBOARD, RECESSED

120/208V PANELBOARD, SURFACE MOUNT

277/480V PANELBOARD, SURFACE MOUNT

277/480V PANELBOARD, RECESSED

FEEDER OR BRANCH CIRCUIT CONCEALED IN WALL, CEILING OR FLOOR

1R1-1 — HOMERUN CONSISTING OF ONE SINGLE-PHASE, 1-POLE CIRCUIT, SEE SPECIFICATIONS AND/OR FEEDER SCHEDULES FOR WIRE SIZES. PANELBOARD AND CIRCUIT DESIGNATION ARE INDICATED.

1M1-1:3 — HOMERUN CONSISTING OF ONE SINGLE-PHASE, 2-P0LE CIRCUIT: SEE SPECIFICATIONS AND/OR FEEDER SCHEDULES FOR WIRE SIZES. PANELBOARD AND CIRCUIT DESIGNATIONS ARE INDICATED.

1R1-1,3 — HOMERUN CONSISTING OF TWO SINGLE-PHASE CIRCUITS: SEE SPECIFICATIONS AND/OR FEEDER SCHEDULES FOR WIRE SIZES. PANELBOARD AND CIRCUIT DESIGNATION ARE INDICATED.

1R1-1,3,5 — HOMERUN CONSISTING OF THREE SINGLE-PHASE CIRCUITS: SEE SPECIFICATIONS AND/OR FEEDER SCHEDULES FOR WIRE SIZES. PANELBOARD AND CIRCUIT DESIGNATIONS ARE INDICATED.

1M1-1:3:5 — HOMERUN CONSISTING OF ONE THREE-PHASE CIRCUITS: SEE SPECIFICATIONS AND/OR FEEDER SCHEDULES FOR WIRE SIZES. PANELBOARD AND CIRCUIT DESIGNATIONS ARE INDICATED.

OVERHEAD BRANCH CIRCUIT

UNDERGROUND BRANCH CIRCUIT

ABBREVIATIONS

A	AMPERES	EXIST	EXISTING	MCB	MAIN CIRCUIT BREAKER
AE	AUDIO ENHANCEMENT	EXP	EXPLOSION PROOF	MCC	MOTOR CONTROL CENTER
AFC	ABOVE FINISHED CEILING	FA	FIRE ALARM	MCP	MOTOR CIRCUIT PROTECTOR
AFF	ABOVE FINISHED FLOOR	FLA	FULL LOAD AMPERES	MFR	MANUFACTURER
AFG	ABOVE FINISHED GRADE	FLUOR	FLUORESCENT	MH	METAL HALIDE
AIC	AMPERES INTERUPTING CAPACITY	GFCI	GROUND FAULT CIRCUIT INTERRUPTER	MIN	MINIMUM
AL	ALUMINUM	GFP	GROUND FAULT PROTECTION	MISC	MISCELLANEOUS
AWG	AMERICAN WIRE GAUGE	GND	GROUND	MMS	MANUAL MOTOR STARTER SWITCH
BFC	BELOW FINISHED CEILING	HGT	HEIGHT	MTR	MOTOR
BFG	BELOW FINIISHED GRADE	HID	HIGH INTENSITY DISCHARGE	MTD	MOUNTED
C	CONDUIT	HPS	HIGH PRESSURE SODIUM	MTG	MOUNTING
CAB	CABINET	HOA	HAND-OFF-AUTOMATIC	NAC	NOTIFICATION APPLIANCE CIRCUIT
CKT	CIRCUIT	HP	HORSEPOWER	NEC	NATIONAL ELECTRICAL CODE
CLG	CEILING	HVAC	HEATING/VENTILATING/ AIR CONDITIONING	NL	NIGHT LIGHT, UNSWITCHED
CL	CENTERLINE	HV	HIGH VOLTAGE	PNL	PANEL
CT's	CURRENT TRANSFORMERS	INC	INCANDESCENT	PSI	PULL STATION INSIDE
CU	COPPER	JB	JUNCTION BOX	PVC	POLYVINYL CHLORIDE
DISC	DISCONNECT(ING)	kV	KILO-VOLTS	REC	RECEPTACLE
DWG	DRAWING(S)	kVA	KILO-VOLTS-AMPERES	RGS	RIGID GALVANIZED STEEL
EA	EACH	kVAR	KILO-VOLTS-AMPERES REACTIVE	SPD	SURGE PROTECTION DEVICE
ECB	ENCLOSED CIRCUIT BREAKER	kW	KILO-WATTS	TEL	TELEPHONE
EF	EXHAUST FAN	kWH	KILO-WATT-HOURS	TYP	TYPICAL
EMT	ELECTRICAL METALLIC TUBING	LTG	LIGHTING	UON	UNLESS OTHERWISE NOTED
EQUIP	EQUIPMENT	m	METER	V	VOLTS
EUH	ELECTRIC UNIT HEATER	mm	MILLIMETER	VA	VOLT-AMPERES
EWC	ELECTRIC WATER COOLER	MAX	MAXIMUM	VFD	VARIABLE FREQUENCY DRIVE
EWH	ELECTRIC WATER HEATER			W	WATTS
EXH	EXHAUST			WP	WEATHER PROOF
				XFMR	TRANSFORMER

SCOPE OF WORK

THE OBJECTIVES OF THIS PROJECT AS IDENTIFIED ON THE DRAWINGS, INCLUDES:

1. PROVIDE NEW WALKWAY LIGHTING FIXTURES WITH ITS RESPECTFUL POLES AND BASE FOR THE NEW SHARED PATHWAY ADDED IN THE PROJECT.
2. PROVIDE UNDERGROUND CONDUIT AND WIRE FOR ALL NEW LOADS ADDED TO THE PROJECT.
3. PROVIDE NEW ELECTRICAL DISTRIBUTION FOR ALL NEW LOADS ON THE PROJECT.
4. PROVIDE UNDERGROUND CONDUIT AND JUNCTION BOXES FOR FUTURE CCTV.

THIS IS A BRIEF DESCRIPTION OF THE SCOPE OF WORK AND IS NOT ALL INCLUSIVE AND IS COMPLIMENTED BY THE SET OF CONSTRUCTION DOCUMENTS.

GENERAL NOTES:

1. ALL ELECTRICAL WORK AND MATERIALS SHALL BE IN COMPLIANCE WITH ALL GOVERNING CODES AND STANDARDS. THIS SHALL INCLUDE BUT NOT BE LIMITED TO THE FOLLOWING:
   A. NFPA 70 NATIONAL ELECTRICAL CODE (2017 EDITION)
   B. FLORIDA BUILDING CODE (SEVENTH EDITION 2020)
   C. NFPA 72 NATIONAL FIRE CODE (2016 EDITION)
   D. FLORIDA FIRE PREVENTION CODE (SEVENTH EDITION 2020)
   E. LOCAL REQUIREMENTS OF THE AUTHORITY HAVING JURISDICTION
2. THE CONTRACTOR RESPONSIBLE FOR THE EXECUTION OF THIS WORK SHALL BECOME THOROUGHLY FAMILIAR WITH THE PROJECT SPECIFICATIONS BEFORE COMMENCING ANY WORK. THE PROJECT SPECIFICATIONS AND DRAWINGS FORM THE BASIS OF THIS CONTRACT REQUIREMENTS AND INCLUDE THE TYPE AND GRADE OF MATERIALS TO BE INSTALLED, EQUIPMENT TO BE FURNISHED, THE MANNER BY WHICH TO BE INSTALLED AND WHERE TO BE LOCATED. IN THE EVENT OF A CONFLICT BETWEEN THE PROJECT SPECIFICATIONS AND DRAWINGS, ASSUME THE MOST STRINGENT AND/OR COSTLY REQUIREMENT APPLIES.
3. THE CONTRACTOR SHALL CONSULT ALL TRADES FURNISHING EQUIPMENT AND OBTAIN FROM THEM ALL DATA PERTAINING TO FURNISHED EQUIPMENT. THE CONTRACTOR SHALL PROVIDE ALL CONDUIT, WIRING, DISCONNECT SWITCHES, AND ASSOCIATED HARDWARE AS REQUIRED FOR COMPLETE AND OPERATING SYSTEMS. COORDINATE AND INSTALL CONDUIT AND BOXES TO CLEAR EMBEDDED DUCTS, OPENINGS AND OTHER STRUCTURAL FEATURES.
4. WHERE THE CONTRACTOR DETERMINES THAT HIS SYSTEM WILL REQUIRE ADDITIONAL 120VAC POWER SUPPLIES IN LOCATIONS OTHER THAT SHOWN ON THE DRAWINGS AND IN THE BOOK SPECIFICATIONS, HE SHALL COORDINATE THESE REQUIREMENTS FOR ADDITIONAL POWER AND ALL COSTS FOR NEW BREAKERS, CONDUIT, WIRE, SURGE SUPPRESSORS AND ANY OTHER REQUIREMENTS SHALL BE INCLUDED IN THIS CONTRACTORS BID.
5. EQUIPMENT LABELS AND INSTRUCTIONS REGARDING THE APPLICATION AND INSTALLATION OF THE LISTED EQUIPMENT SHALL BE FOLLOWED TO INSURE THAT THE EQUIPMENT IS BEING INSTALLED IN ACCORDANCE WITH THE MANUFACTURER'S LISTING INSTRUCTIONS. THE TEMPERATURE RATING OF THE EQUIPMENT TERMINATIONS MUST BE CAREFULLY CORRELATED WITH THE CONDUCTOR AMPACITY TO PREVENT OVERHEATING AND PREMATURE FAILURE.
6. THE BUSINESS OPERATION OF THE BUILDING SHALL NOT BE DISRUPTED DURING THE EXECUTION OF THIS WORK WITHOUT PRIOR NOTIFICATION AND APPROVAL BY THE OWNER.
7. ALL EXISTING ITEMS DESIGNATED TO REMAIN, SUCH AS LIGHTING FIXTURES, OUTLETS, SWITCHES, FIRE ALARM DEVICES, ETC. THAT ARE IN CONFLICT WITH NEW CEILING OR WALLS, SHOULD BE RELOCATED AND LEFT IN OPERATION. CONTRACTOR TO WALK THE SITE AND BECOME FAMILIAR WITH RELOCATION OF EXISTING DEVICES PRIOR TO CONSTRUCTION.
8. WHERE CIRCUITS ARE INDICATED TO BE INSTALLED IN EXISTING PANELS, VERIFY ACTUAL SPARES OR SPACES IN SAID PANELBOARDS AND USE THE SPARE DEVICES OR FURNISH NEW CIRCUIT BREAKERS AS INDICATED ON THE DRAWINGS.
9. WHERE THE CONTRACTOR PROPOSES ALTERNATE SOLUTIONS, DIFFERENT ROUTINGS OF CONDUIT, DIFFERENT LOCATIONS OF EQUIPMENT, ETC., THE CONTRACTOR SHALL BE RESPONSIBLE FOR ALL OF THE RAMIFICATIONS OF THE PROPOSED CHANGE THAT ARE NOT INCLUDED IN HIS PROPOSAL, BUT BECOME APPARENT AT A LATER DATE, AND SHALL BEAR THE CONSEQUENCES OF CORRECTING ANY AND ALL CONFLICTS, DEFICIENCIES OR OTHER PROBLEMS AT NO INCREASE IN COST OR INCREASE IN CONSTRUCTION TIME ALLOTTED.
10. THE CONTRACTOR SHALL INCLUDE IN HIS SCOPE; (1) THE LABOR AND MATERIALS REQUIRED FOR CREATING OPENINGS FOR CONDUIT PENETRATIONS THROUGH WALLS, SLABS AND ROOF STRUCTURES; AS WELL AS THE SEALING OF THESE PENETRATIONS; (2) THE ROUTING OF CONDUITS AROUND INPENETRATABLE OBSTACLES, SUCH AS POURED-IN-PLACE BEAMS, COLUMNS, LINTELS AND SIMILAR OBSTRUCTIONS AND; (3) THE SEALING OF PENETRATIONS OF CONDUITS INTO WHICH NEW WIRE IS PULLED AS A PART OF THIS PROJECT, TO INCLUDE FIREPROOFING WHERE NECESSARY.
11. IF THE INTENT OF THE ENGINEER WITH REGARD TO ANY DETAIL IS NOT CLEAR, OR IS CAPABLE OF MORE THAN ONE INTERPRETATION, SUCH MATTERS SHALL BE BROUGHT TO THE ENGINEER IN WRITING BEFORE THE SUBMISSION OF BIDS. AND THE ENGINEER SHALL ISSUE CORRECTION OR CLARIFICATION IN WRITING. OTHERWISE, NO EXTRA COSTS OR EXTENSIONS OF TIME WILL BE BE ALLOWED FOR THE WORK OR MATERIAL THAT THE A/E WILL REQUIRE, PROVIDED THAT IT COMES WITHIN A REASONABLE INTERPRETATION OF THE DRAWINGS AND SPECIFICATIONS.
12. NO WIRING SHALL BE DONE PRIOR TO THE CONTRACTOR'S REVIEW OF THE PROJECT EQUIPMENT SHOP DRAWINGS AND COORDINATION WITH THE DESIGN DOCUMENTS. ANY DISCREPANCIES SHALL BE BROUGHT TO THE ENGINEER ATTENTION FOR FINAL RESOLUTION. WORK THAT HAS TO BE REPLACED DUE TO LACK OF PROPER SHOP DRAWINGS CO-ORDINATION SHALL BE DONE AT CONTRACTORS EXPENSE
13. EXISTING SYSTEMS SHOWN ARE BASED ON VISUAL INSPECTION AND EXISTING DRAWINGS, BUT THEY MAY NOT REFLECT THE ACTUAL CONDITIONS IN EVERY CASE. THE CONTRACTOR SHALL INSPECT THE SITE AND EXAMINE THE WORK BEFORE SUBMITTING HIS PROPOSAL. THE CONTRACTOR SHALL NOTE THE LOCATION OF EXISTING FACILITIES, THE EXTENT OF HIS WORK, AND INTERFERENCE BY OTHER TRADES WITH HIS WORK. ANY DISCREPANCIES SHOULD BE DISCUSSED WITH THE ENGINEER. SUBMISSION OF A PROPOSAL WILL BE CONSTRUED AS EVIDENCE THAT SUCH EXAMINATION HAS BEEN MADE AND LATER CLAIMS FOR LABOR, EQUIPMENT OR MATERIALS REQUIRED BECAUSE OF DIFFICULTIES ENCOUNTERED WILL NOT BE RECOGNIZED.
14. FIRESTOP ALL PENETRATIONS (MADE BY THIS CONTRACTOR) THROUGH FIRE-RATED WALLS, FLOORS AND CEILINGS.
15. THIS CONTRACTOR SHALL BE RESPONSIBLE FOR ALL CUTTING AND PATCHING RELATED TO THIS CONTRACTOR'S WORK. PATCH ALL UNUSED OPENINGS (CREATED BY THIS CONTRACTOR) TO MATCH SURROUNDING CONDITIONS.
16. CONDUIT RUNS SHOWN ON THE DRAWINGS ARE DIAGRAMMATIC. ALL CONDUITS SHALL BE RUN CONCEALED, EXCEPT IN EQUIPMENT ROOMS AND WHERE APPROVED BY THE ENGINEER.
17. FURNISH AND INSTALL EQUIPMENT DISCONNECT SWITCHES IN STRICT COMPLIANCE WITH APPLICABLE CODE REQUIREMENTS.ALL FEEDERS ARE TO HAVE LESS THAN 2% TOTAL VOLTAGE DROP AND ALL BRANCH CIRCUITS SHALL HAVE LESS THAN 3% VOLTAGE DROP. WIRING TO RECEPTACLES SHALL BE #12 THWN MINIMUM.
18. EXCEPT WHERE SPECIFICALLY NOTED OTHERWISE, THE CONTRACTOR SHALL PROVIDE NEW CONDUIT FOR ALL CONDUCTORS THAT ARE INSTALLED AS A PART OF THIS PROJECT. INSULATED PLASTIC BUSHINGS ARE TO BE PROVIDED ON ALL CONDUIT STUB-OUTS AND STUB-UPS.
19. THE INSTALLATION OF ALL DEVICES, INCLUDING MOUNTING HEIGHTS, SHALL BE FULLY ADA AND NFPA COMPLIANT.
20. THE CONTRACTOR SHALL VERIFY THE EXACT DIRECTION OF ALL DOOR SWINGS PRIOR TO ROUGH-IN OF BOXES MOUNTED IN WALLS.
21. THE CONTRACTOR SHALL THOROUGHLY CLEAN ALL EQUIPMENT TO BE COMPLETELY FREE OF INTERNAL DEBRIS AND EXTERIOR PAINT, MARKS, DIRT AND ALL SCRATCHES SHALL BE TOUCHED UP.
22. ALL EMPTY/SPARE CONDUITS SHALL HAVE PULL STRINGS WITH LABELING TAGS AT EACH END.
23. ALL RACEWAYS SHALL HAVE A GREEN INSULATED COPPER EQUIPMENT-GROUNDING CONDUCTOR.
24. ALL BRANCH CIRCUITS AND FEEDERS SHALL BE PROVIDE WITH SEPARATE GROUNDING CONDUCTORS.
25. ALL EXTERIOR MOUNTED FIXTURES, POLES, AND BASES SHALL BE DESIGNED AND MANUFACTURED TO WITHSTAND 180MPH WIND.
26. PROVIDE SHOP DRAWINGS AND CALCULATIONS FOR ALL EXTERIOR POLE MOUNTED FIXTURES WITH SIGNATURE AND SEAL OF A FLORIDA REGISTERED PROFESSIONAL ENGINEER CERTIFIYING THAT THE FOUNDATION AND POLE/FIXTURE ASSEMBLY MEETS OR EXCEEDS SREF AND ASCE 7. THE EXTERIOR POLE MOUNTED LIGHT FIXTURE ASSEMBLIES SHALL BE CAPABLE OF WITHSTANDING WINDLOADS IN ACCORDANCE WITH ASCE 7-10. DESIGN WIND VELOCITY SHALL BE 180 MPH.

LIGHTING FIXTURE SCHEDULE

TYPE	DESCRIPTION	DESIGN SELECTION	VOLTS	LAMPS/FIXTURE	INPUT WATTAGE	CONTROLS	NOTE
L1	POST TOP LED LIGHT POLE WITH CONCRETE BASE.	SPRING CITY ALMALN-M1-LED070-EVX-2G3-HSS-40-CR3-YCLO-RAL7047 OR APPROVED EQUAL	UNV	LED	70W	ON = DUSK OFF = DAWN DIM 20% AND OCC = 10:00PM-6:00PM	

NOTES

A. ALL FIXTURES SHALL HAVE MINIMUM 80 CRI.
B. ALL FIXTURES SHALL BE LABELED WITH MAXIMUM ALLOWABLE WATTAGE. MAXIMUM IS THE WATTAGE OF LAMP AS SHOWN IN SCHEDULE.
C. ALL FIXTURES, WHETHER STANDARD OR NOT, REQUIRE LISTING BY A NATIONALLY RECOGNIZED TESTING LABORATORY.
D. WHEN FIXTURE MODEL DIFFERS FROM FIXTURE DESCRIPTION, THEN THE FIXTURE DESCRIPTION SHALL GOVERN.
E. ALL EXISITNG AND NEW FIXTURES TO BE PROVIDED WITH INLINE FUSES AND SURGE PROTECTOR DEVICES.
F. ON REFERS TO WHEN THE LIGHTS ARE TO BE ILLUMINATED.
G. OFF REFERS TO WHEN THE LIGHTS ARE TO NOT PROVIDE ILLUMINATION BUT REMAIN ENERGIZED.
H. DIM REFERS TO WHEN THE LIGHTS ARE TO DIM TO MAINTAIN A TARGET ILLUMINANCE. REFER TO LUMINANCE TO ILLUMINANCE CONVERSION CHART FOR ASSOCIATED FOOT-CANDLE VALUES.
I. DIM 20% REFERS TO WHEN THE LIGHTS ARE TO DIM TO 20% OF TARGET ILLUMINANCE IN DIM.
J. OCC REFERS TO WHEN THE LIGHTS ARE TO FADE FROM THE CURRENT INTENSITY TO 100% OVER 5 SECONDS IN RESPONSE TO MOTION SENSORS. SENSORS TIMEOUT AFTER 15 SECONDS AND LIGHTS FADE DOWN TO PREVIOUS INTENSITY OVER 30 SECONDS. CONTROLS SHALL BE CAPABLE OF TRIGGERING LUMINAIRES IN RESPONSE TO TRAFFIC 300 HUNDRED FEET AWAY ON APPROACH. SENSORS OF ADJACENT LUMINAIRES SHALL BE CAPABLE OF TRIGGERING MULTIPLE LUMINAIRES ON THE ROADWAY IN RESPONSE TO APPROACHING TRAFFIC. CONTROLS SHALL BE FIELD TESTED BY CONTROLS MANUFACTURER AND ADJUSTED AS NEEDED FOR OPTIMAL SAFETY.

LIGHTING FIXTURE SCHEDULE NOTES

1. EXACT FIXTURE LOCATION TO BE VERIFIED WITH FIELD CONDITIONS AND CONFIRMED WITH ARCHITECT OR LIGHTING DESIGNER PRIOR TO FINAL INSTALLATION.
2. CONTRACTOR SHALL SUPPLY NECESSARY HARDWARE AND RELATED SUPPLEMENTAL STRUCTURAL SUPPORT MATERIALS TO ENSURE A SAFE, SECURE AND CODE COMPLIANT MOUNTING FOR THIS LUMINAIRE. WHEN REQUIRED BY SITUATION, CONTRACTOR SHALL BE RESPONSIBLE FOR ENSURING STRUCTURAL INTEGRITY OF INSTALLATION BY ENGAGINGAN A REGISTERED STRUCTURAL ENGINEER FOR APPLICATION REVIEW. ALL MODIFICATIONS NECESSARY TO CEILING OR STRUCTURE TO WHICH THIS FIXTURE IS TO BE MOUNTED SHALL BE COORDINATED WITH APPLICABLE TRADES.
3. REFERENCE ALL DISCIPLINES PLANS, KEY SECTIONS, DETAILS OR ELEVATIONS TO AS CERTAIN DESIRED LAYOUTS AND MOUNTING HEIGHTS. SHOULD ANY CONFLICT, QUESTION OR AMBIGUITY ARISE DURING THESE DETERMINATIONS, IT SHOULD BE BROUGHT TO THE ATTENTION OF THE CONTRACTING OFFICER AND DESIGN TEAM FOR RESOLUTION PRIOR TO PROCEEDING. CONTRACTOR ASSUMES ALL COSTS ASSOCIATED WITH ANY CHANGE TO WORK COMPLETED PRIOR TO RESOLUTION.
4. INTENDED PLACEMENT OF THIS FIXTURE WITHIN PLANTER IS INDICATED ON LANDSCAPE ARCHITECTURAL DRAWINGS. PRIOR TO FINAL ROUGH-IN TO THESE POSITIONS, CONTRACTOR SHALL CONDUCT A NIGHTTIME FIXTURE POSITIONING MOCK-UP FOR EACH PLANTER/TREE TYPE WITHIN PROJECT, TO VERIFY THE DESIRED FIXTURE LOCATIONS.
5. COORDINATE EXACT POST LOCATION WITH PAVER CUTS AND PLACEMENTS, AS INDICATED ON LANDSCAPE ARCHITECTURAL DRAWINGS; AMBIGUITIES BETWEEN DRAWINGS AND FIELD CONDITIONS MUST BE BROUGHT TO THE ATTENTION OF THE DESIGN TEAM FOR RESOLUTION.
6. CONTRACTOR SHALL SUPPLY ALL MISCELLANEOUS MOUNTING HARDWARE, INCLUDING FASTENING DEVICES, CABLE, JUNCTION BOXES, ETC. TO ENSURE A COMPLETE CODE COMPLIANT INSTALLATION AS PER MANUFACTURERS RECOMMENDATIONS.

KEY PLAN (NOT TO SCALE):

SEAL:

This item has been digitally signed and sealed by Enrique Gomez, P.E. on the date adjacent to the seal.

Printed copies of this document are not considered signed and sealed and the signature must be verified on any electronic copies.

Printed copies of this document are not considered signed and sealed and the SHA authentication code must be verified on any electronic copies.

APPROVED: _____

FLA. REGISTRATION NO. _____ DATE: _____

MIAMIBEACH
OFFICE OF CAPITAL IMPROVEMENT PROJECTS
1701 MERIDIAN AVENUE, MIAMI BEACH, FL 33139

PROJECT: CHASE AVENUE AND W 34TH STREET PATH

ADDRESS: CITY OF MIAMI BEACH, FL

SUB-CONSULTANT

LA OF RECORD: CMJ
DESIGN LA: CMJ
DRAWN BY: AP
CHECKER: CMJ
SCALE: AS SHOWN

LANDSCAPE ARCHITECT OF RECORD:

CASTO MIGUEL JUNCAL NO.6667184

NO.	DATE	REVISION	APP'D. BY
5			
4			
3			
2			
1			

Drawing Title: ELECTRICAL SYMBOLS, LEGEND, GEN NOTES AND LIGHT FIXTURE SCHEDULE

Filename: E-001-2021375.dwg

Date: Sheet: of

Drawing No.: E0.1

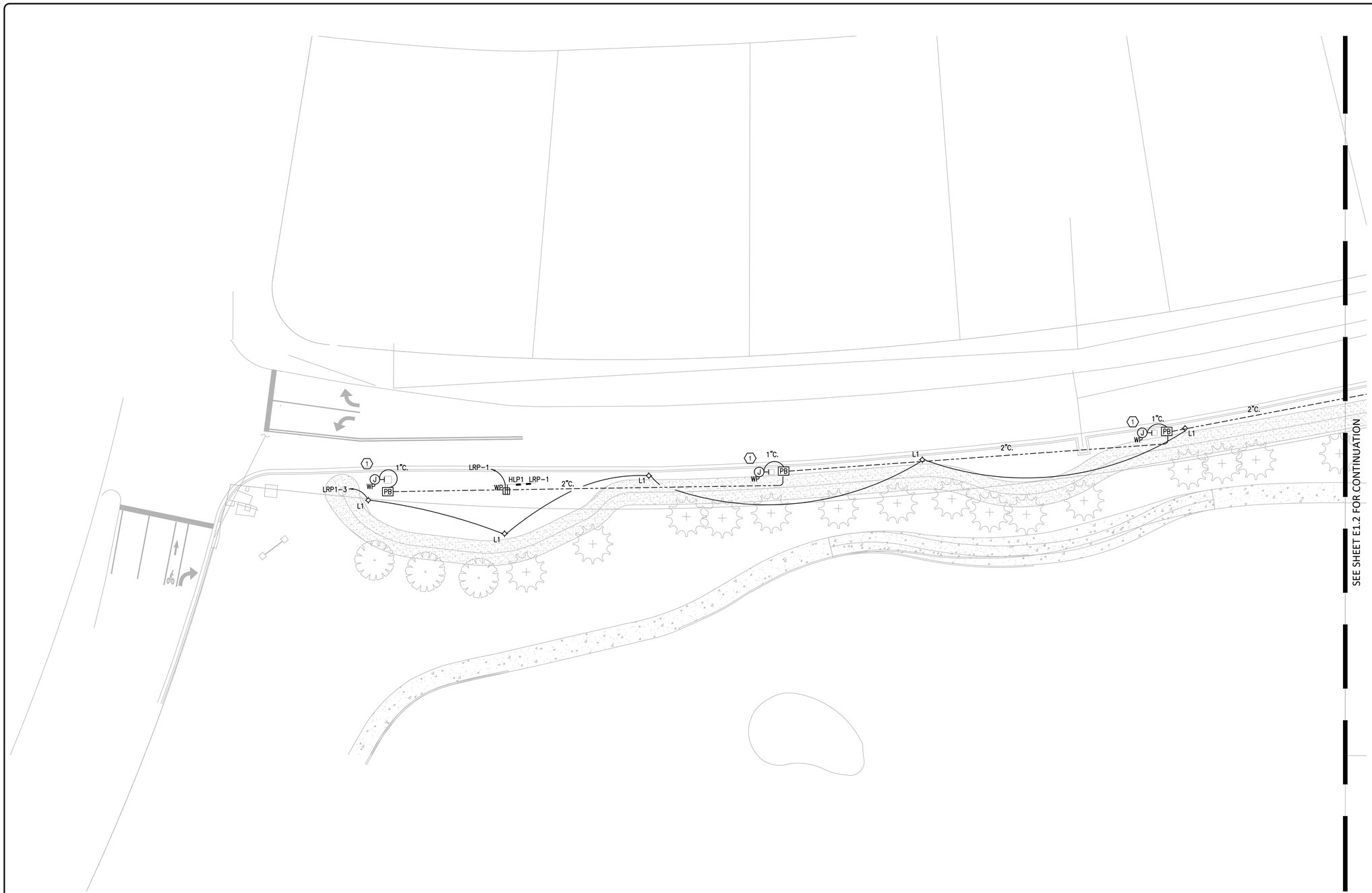

GENERAL NOTES:

a. REFER TO SYMBOL, LEGEND, GENERAL NOTES AND LIGHTING FIXTURE SCHEDULE ON SHEET E0.1

b. REFER TO BOOK SPECIFICATIONS.

c. COORDINATE WORK WITH ALL OTHER TRADES BEFORE ANY ROUGH-INS.

d. ALL FEEDERS ARE TO HAVE LESS THAN 2% TOTAL VOLTAGE DROP AND ALL BRANCH CIRCUITS SHALL HAVE LESS THAN 3% VOLTAGE DROP.

e. ALL BRANCH CIRCUITS TO BE PROVIDED WITH DEDICATED NEUTRAL.

f. REFER TO DETAILS FOR ALL UNDERGROUND CONDUITS.

g. REFER TO DETAILS FOR POLE MOUNTING.

PLAN KEY NOTES:

1. PROVIDE JUNCTION BOX FOR FUTURE CCTV MOUNTED ON EXISTING FPL POLE +12' AFF.

KEY PLAN (NOT TO SCALE):

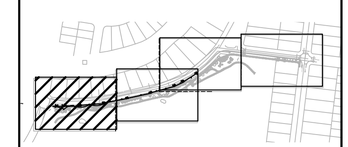

SEAL:

ENRIQUE E. HERNANDEZ
LICENSED
No. 74980
STATE OF
FLORIDA
PROFESSIONAL ENGINEER

Printed copies of this document are not considered signed and sealed and the SHA authentication code must be verified on any electronic copies.

APPROVED: _____

FLA. REGISTRATION NO. _____ DATE: _____

This item has been digitally signed and sealed by Enrique Gomez, P.E. on the date adjacent to the seal.

Printed copies of this document are not considered signed and sealed and the signature must be verified on any electronic copies.

MIAMIBEACH
OFFICE OF CAPITAL IMPROVEMENT PROJECTS
1701 MERIDIAN AVENUE, MIAMI BEACH, FL.33139

PROJECT: CHASE AVENUE AND W 34TH STREET PATH

ADDRESS: CITY OF MIAMI BEACH, FL

SUB-CONSULTANT

LA OF RECORD: CMJ
DESIGN LA: CMJ
DRAWN BY: AP
CHECKER: CMJ
SCALE: AS SHOWN

LANDSCAPE ARCHITECT OF RECORD:
CASTO MIGUEL JUNCAL
NO.6667184

NO.	DATE	REVISION	APP'D. BY
5			
4			
3			
2			
1			

Drawing Title: PARTIAL ELECTRICAL SITE PLAN

Filename: **E1.1-2021375.dwg**

Date: Sheet: of

Drawing No.: E1.1

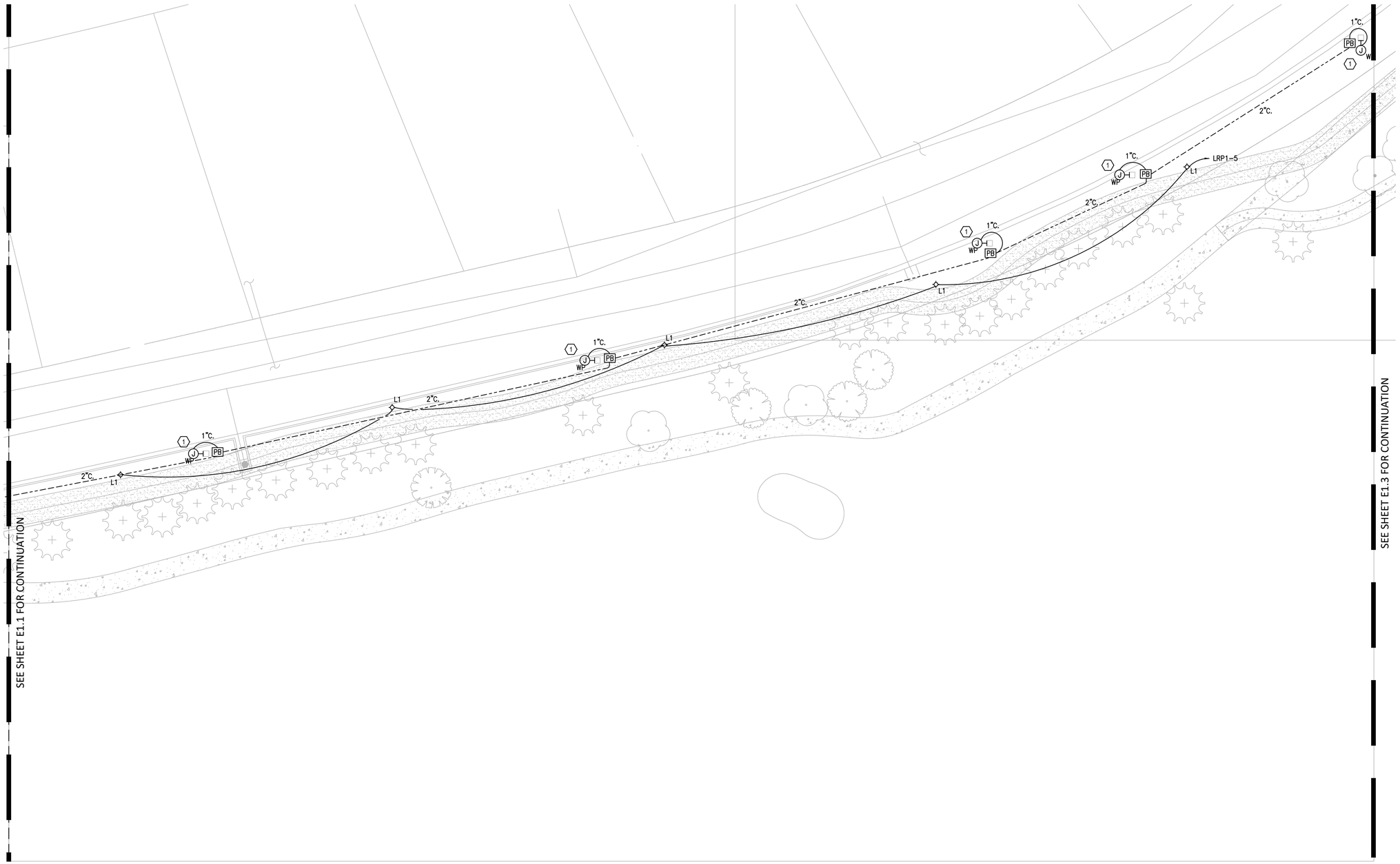

GENERAL NOTES:

a. REFER TO SYMBOL, LEGEND, GENERAL NOTES AND LIGHTING FIXTURE SCHEDULE ON SHEET E0.1

b. REFER TO BOOK SPECIFICATIONS.

c. COORDINATE WORK WITH ALL OTHER TRADES BEFORE ANY ROUGH-INS.

d. ALL FEEDERS ARE TO HAVE LESS THAN 2% TOTAL VOLTAGE DROP AND ALL BRANCH CIRCUITS SHALL HAVE LESS THAN 3% VOLTAGE DROP.

e. ALL BRANCH CIRCUITS TO BE PROVIDED WITH DEDICATED NEUTRAL.

f. REFER TO DETAILS FOR ALL UNDERGROUND CONDUITS.

g. REFER TO DETAILS FOR POLE MOUNTING.

PLAN KEY NOTES:

1. PROVIDE JUNCTION BOX FOR FUTURE CCTV MOUNTED ON EXISTING FPL POLE +12' AFF.

KEY PLAN (NOT TO SCALE):

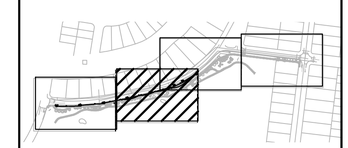

SEAL:

ENRIQUE E. GOMEZ
LICENSE NUMBER
STATE OF FLORIDA
PROFESSIONAL ENGINEER

Printed copies of this document are not considered signed and sealed and the SHA authentication code must be verified on any electronic copies.

APPROVED : _____

FLA. REGISTRATION NO. _____ DATE : _____

This item has been digitally signed and sealed by Enrique Gomez, P.E. on the date adjacent to the seal.

Printed copies of this document are not considered signed and sealed and the signature must be verified on any electronic copies.

MIAMIBEACH
OFFICE OF CAPITAL IMPROVEMENT PROJECTS
1701 MERIDIAN AVENUE, MIAMI BEACH, FL.33139

PROJECT: CHASE AVENUE AND W 34TH STREET PATH

ADDRESS: CITY OF MIAMI BEACH, FL

SUB-CONSULTANT

LA OF RECORD CMJ
DESIGN LA: CMJ
DRAWN BY: AP
CHECKER: CMJ
SCALE: AS SHOWN

LANDSCAPE ARCHITECT OF RECORD:
CASTO MIGUEL JUNCAL
NO.6667184

NO.	DATE	REVISION	APP'D. BY
5			
4			
3			
2			
1			

Drawing Title: PARTIAL ELECTRICAL SITE PLAN

Filename: E1.2-2021375.dwg

Date: Sheet: of

Drawing No.: E1.2

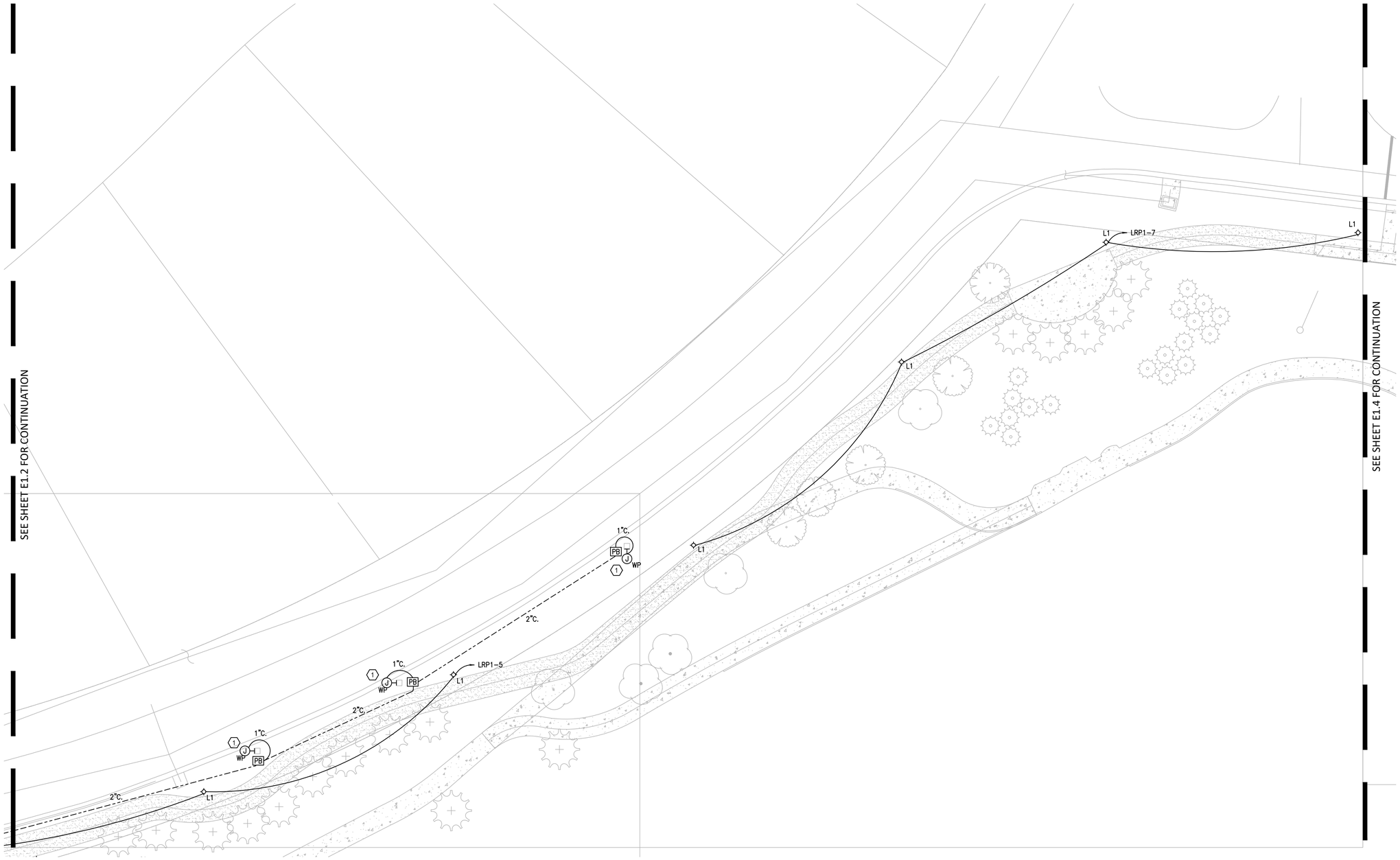

GENERAL NOTES:

a. REFER TO SYMBOL, LEGEND, GENERAL NOTES AND LIGHTING FIXTURE SCHEDULE ON SHEET E0.1

b. REFER TO BOOK SPECIFICATIONS.

c. COORDINATE WORK WITH ALL OTHER TRADES BEFORE ANY ROUGH-INS.

d. ALL FEEDERS ARE TO HAVE LESS THAN 2% TOTAL VOLTAGE DROP AND ALL BRANCH CIRCUITS SHALL HAVE LESS THAN 3% VOLTAGE DROP.

e. ALL BRANCH CIRCUITS TO BE PROVIDED WITH DEDICATED NEUTRAL.

f. REFER TO DETAILS FOR ALL UNDERGROUND CONDUITS.

g. REFER TO DETAILS FOR POLE MOUNTING.

PLAN KEY NOTES:

1. PROVIDE JUNCTION BOX FOR FUTURE CCTV MOUNTED ON EXISTING FPL POLE +12' AFF.

KEY PLAN (NOT TO SCALE):

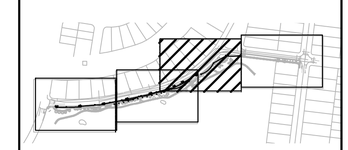

SEAL:

ENRIQUE E. HERNANDEZ
STATE OF FLORIDA
PROFESSIONAL ENGINEER
No. 76260

Printed copies of this document are not considered signed and sealed and the SHA authentication code must be verified on any electronic copies.

APPROVED: _____

F.L.A. REGISTRATION NO. _____ DATE: _____

This item has been digitally signed and sealed by Enrique Gomez, P.E. on the date adjacent to the seal.

Printed copies of this document are not considered signed and sealed and the signature must be verified on any electronic copies.

MIAMIBEACH
OFFICE OF CAPITAL IMPROVEMENT PROJECTS
1701 MERIDIAN AVENUE, MIAMI BEACH, FL 33139

PROJECT: CHASE AVENUE AND W 34TH STREET PATH

ADDRESS: CITY OF MIAMI BEACH, FL

SUB-CONSULTANT

LA OF RECORD: CMJ
DESIGN LA: CMJ
DRAWN BY: AP
CHECKER: CMJ
SCALE: AS SHOWN

LANDSCAPE ARCHITECT OF RECORD:
CASTO MIGUEL JUNCAL
NO.6667184

NO.	DATE	REVISION	APP'D. BY
5			
4			
3			
2			
1			

Drawing Title: PARTIAL ELECTRICAL SITE PLAN

Filename: E4.2-2021375.dwg

Date: Sheet: of

Drawing No.: E1.3

GENERAL NOTES:

a. REFER TO SYMBOL, LEGEND, GENERAL NOTES AND LIGHTING FIXTURE SCHEDULE ON SHEET E0.1

b. REFER TO BOOK SPECIFICATIONS.

c. COORDINATE WORK WITH ALL OTHER TRADES BEFORE ANY ROUGH-INS.

d. ALL FEEDERS ARE TO HAVE LESS THAN 2% TOTAL VOLTAGE DROP AND ALL BRANCH CIRCUITS SHALL HAVE LESS THAN 3% VOLTAGE DROP.

e. ALL BRANCH CIRCUITS TO BE PROVIDED WITH DEDICATED NEUTRAL.

f. REFER TO DETAILS FOR ALL UNDERGROUND CONDUITS.

g. REFER TO DETAILS FOR POLE MOUNTING.

KEY PLAN (NOT TO SCALE):

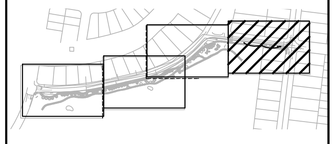

SEAL:

Printed copies of this document are not considered signed and sealed and the SHA authentication code must be verified on any electronic copies.

APPROVED: _____

FLA. REGISTRATION NO. _____ DATE: _____

This item has been digitally signed and sealed by Enrique Gomez, P.E. on the date adjacent to the seal.

Printed copies of this document are not considered signed and sealed and the signature must be verified on any electronic copies.

MIAMIBEACH

OFFICE OF CAPITAL IMPROVEMENT PROJECTS

1701 MERIDIAN AVENUE, MIAMI BEACH, FL 33139

PROJECT: CHASE AVENUE AND W 34TH STREET PATH

ADDRESS: CITY OF MIAMI BEACH, FL

SUB-CONSULTANT

LA OF RECORD: CMJ
DESIGN LA: CMJ
DRAWN BY: AP
CHECKER: CMJ
SCALE: AS SHOWN

LANDSCAPE ARCHITECT OF RECORD:

CASTO MIGUEL JUNCAL
NO.6667184

NO.	DATE	REVISION	APP'D. BY
5			
4			
3			
2			
1			

Drawing Title: PARTIAL ELECTRICAL SITE PLAN

Filename: **E4.3-2021375.dwg**

Date: Sheet: of

Drawing No.: E1.4

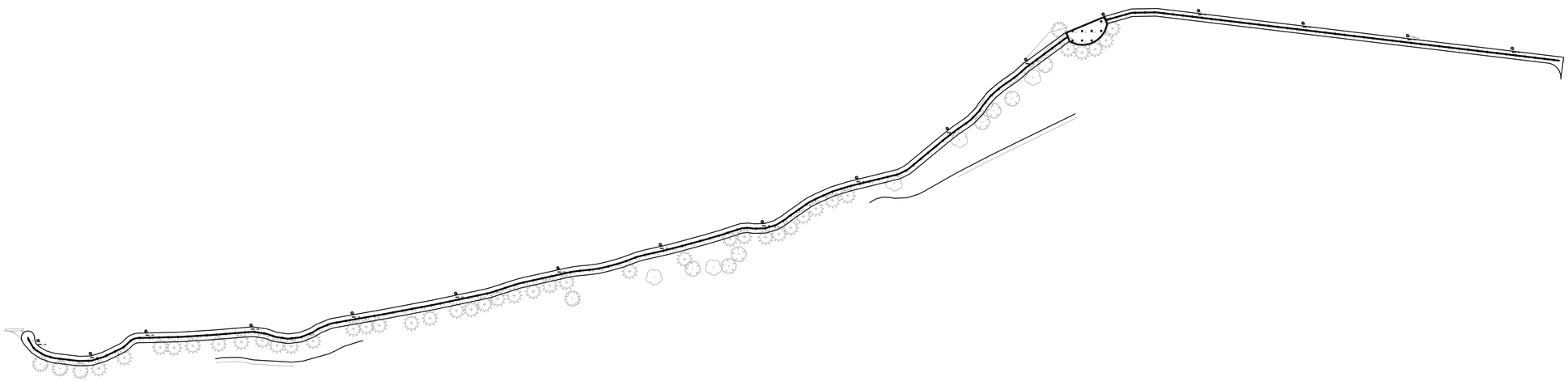

Luminaire Schedule						
Symbol	Qty	Label	Description	LLD	Lum. Watts	Total Watts
	17	L1	SPRING CITY ALMALN-M1-LED070-EVX-2G3-HSS-40-CR3-YCLO-RAL7047	1.000	68.684	1167.628

Calculation Summary					
Label	Avg	Max	Min	Avg/Min	Max/Min
PEDESTRIAN PATH	1.4	2.8	0.4	3.4	7.0

This item has been digitally signed and sealed by Enrique Gomez, P.E. on the date adjacent to the seal.

Printed copies of this document are not considered signed and sealed and the signature must be verified on any electronic copies.

KEY PLAN (NOT TO SCALE):

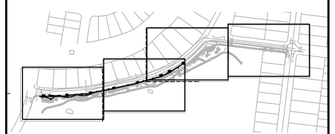

SEAL:

ENRIQUE HERNANDEZ GOMEZ LICENSE NO. 74980 STATE OF FLORIDA PROFESSIONAL ENGINEER

Printed copies of this document are not considered signed and sealed and the SHA authentication code must be verified on any electronic copies.

APPROVED: _____

FLA. REGISTRATION NO. _____ DATE: _____

MIAMIBEACH

OFFICE OF CAPITAL IMPROVEMENT PROJECTS

1701 MERIDIAN AVENUE, MIAMI BEACH, FL.33139

PROJECT: CHASE AVENUE AND W 34TH STREET PATH

ADDRESS: CITY OF MIAMI BEACH, FL

SUB-CONSULTANT

LA OF RECORD CMJ

DESIGN LA: CMJ

DRAWN BY: AP

CHECKER: CMJ

SCALE: AS SHOWN

LANDSCAPE ARCHITECT OF RECORD:

CASTO MIGUEL JUNCAL NO.6667184

NO.	DATE	REVISION	APP'D. BY
5			
4			
3			
2			
1			

Drawing Title: ELECTRICAL PHOTOMETRICS SITE PLAN

Filename: E1.1-2021375.dwg

Date: Sheet: of

Drawing No.: E1.5

MANUFACTURER:	SQ. D.	MAIN OPTIONS REQUIRED	
TYPE:		MCB:	50 AMPS
AIC RATING:	18 K AMPS	MLO:	N/A AMPS
VOLTS L-N:	120 V	S.E RATED:	N/A
VOLTS L-L:	240 V	GFI PROT:	NO
PHASE	1	SHUNT TRIP:	N/A

PANEL NAME: LRP1

LOCATION:	
MOUNTING:	SURFACE
NEMA TYPE:	4X
WIDTH :	20.00 IN
DEPTH :	5.75 IN

NOTES	CKT NO.	IDENTIFICATION	LOAD	LOAD/PHASE (KVA) A	B	C	CIRCUIT BREAKER TRIP	P	P	TRIP	LOAD/PHASE (KVA) A	B	C	LOAD	IDENTIFICATION	CKT NO.	NOTES
	1	SERVICE RECEPTACLE	R	0.36			20	1	1	20				S	SPARE	2	
	3	WALKWAY LIGHTING	L		1.15		20	1	1	20				S	SPARE	4	
	5	WALKWAY LIGHTING	L			1.39	20	1	1	20				S	SPARE	6	
	7	WALKWAY LIGHTING	L	1.07			20	1	1	20				S	SPACE	8	
	9	WALKWAY LIGHTING	L		1.07		20	1	1	20				S	SPACE	10	
	11	SPARE	S				20	1	1	20				S	SPACE	12	
	13	SPACE	S				20	1	1	20				S	SPACE	14	
	15	SPACE	S				20	1	1							16	
	17	SPACE	S				20	1	1	20					SPD	18	
	19	SPACE	S				20	1	1							20	
				1.4	2.2	1.4					0.0	0.0	0.0				

	CONN. LOAD (KVA)	DEMAND FACTOR	DEMAND LOAD (KVA)
LIGHTING (L)	4.68	1.25	5.85
RECEPTACLES 1ST 10 KVA(R)	0.36	1.00	0.36
RECEPTACLES OVER 10KVA(R)	0.00	0.50	0.00
HVAC EQUIPMENT (H)	0.00	1.00	0.00
APPLIANCES (A)	0.00	1.00	0.00
EQUIPMENT (E)	0.00	1.00	0.00
LARGEST MOTOR (M)	0.00	1.25	0.00
OTHER (O)	0.00	1.00	0.00
SPARE (S)	0.00	1.00	0.00
LINKED PANEL (P)	INCLUDED IN ABOVE TOTALS		

TOTAL CONNECTED KVA: 5.04
TOTAL CONNECTED AMPS/PH: 14
TOTAL DEMAND KVA: 6.21
TOTAL DEMAND AMPS/PH: 17

GENERAL NOTES:
a. PROVIDE ARC FLASH LABELING FOR THE PANEL IN ACCORDANCE WITH NFPA 70 & 70E AS SPECIFIED.
SCHEDULE NOTES:

PANEL FEEDER SCHEDULE:

* WIRE SIZES ARE BASED ON NFPA 70 TABLE 310.15(B)(16) 60 DEGREE CU COLUMN FOR SIZES OF 100A AND LESS, ALL OTHERS BASED ON 75 DEGREE COLUMN.
**LOAD AMPS AND DISTANCE SHOWN FOR VD CALCULATION ONLY. SEE PANEL SCHEDULE FOR ACTUAL LOAD. ACTUAL DISTANCE MAY VARY DEPENDENT ON ROUTING.

FEEDER DESCRIPTION SOURCE	LOAD	VOLTS	PH	NEUT Y/N	200% NEUT Y/N	GRND Y/N	ISO GND Y/N	MAIN OCP RATING	LOAD AMPS**	DISCONNECT SIZE	FUSE	NEMA	WIRE PER PHASE*	NEUT WIRE	ADD NEUT	GND WIRE	ISO GND	SYST BOND JUMP	# OF RUNS	CONDUIT SIZE	APPROX DIST.** FT	VOLT DROP VD%	NOTES
FPL	LRP1	240	1	Y	N	Y	N	60	17				#3	#3		#4		#8	1	1-1/4"	500	1.77%	

GENERAL NOTES:
(1) - PROVIDE DISC. SW. AT ALL PIECES OF EQUIPMENT, UNLESS OTHERWISE NOTED ON THIS SCHEDULE.
(2) - FUSES SHOWN FOR REFERENCE ONLY, PROVIDE FUSES AS RECOMMENDED BY EQUIP. MANUF.
(3) - PROVIDE NEMA OUTDOOR RATED ENCLOSURES FOR ALL DISC. SWS MOUNTED OUTDOORS.
(4) - COORDINATE STARTER TYPE WITH MECHANICAL EQUIPMENT INSTALLER.
(5) - E.C. TO VERIFY THAT C.B. FOR COMPRESSORS IS SUFFICIENT TO ALLOW STARTING OF UNIT, IF

(6) - #12 FEEDERS SHOWN AND OVER 50FT. LONG TO BE #10 WIRE FOR 120V CIRCUITS.
#12 FEEDERS SHOWN AND OVER 100FT. LONG TO BE #10 WIRE FOR 277V CIRCUITS.

ABBREVIATIONS:
N.F. = NON-FUSED
ECB = ENCLOSED CIRCUIT BREAKER
3R = NEMA 3R ENCLOSURE
4X = NEMA 4 W.P. STAINLESS STEEL ENCL.

NOTES:
(a) - ROUTE ALL FEEDERS CONCEALED FROM PUBLIC VIEW

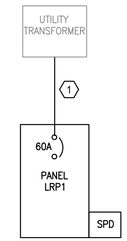

GENERAL NOTES:

a. REFER TO SYMBOL, LEGEND, GENERAL NOTES AND LIGHTING FIXTURE SCHEDULE ON SHEET E-001.

b. REFER TO BOOK SPECIFICATIONS.

KEYED NOTES:

1. REFER TO PANEL FEEDER SCHEDULE FOR WIRE AND CONDUIT SIZES.

KEY PLAN (NOT TO SCALE):

SEAL:

Printed copies of this document are not considered signed and sealed and the SHA authentication code must be verified on any electronic copies.

APPROVED: _____
FLA. REGISTRATION NO. _____ DATE: _____

This item has been digitally signed and sealed by Enrique Gomez, P.E. on the date adjacent to the seal.

Printed copies of this document are not considered signed and sealed and the signature must be verified on any electronic copies.

MIAMIBEACH
OFFICE OF CAPITAL IMPROVEMENT PROJECTS
1701 MERIDIAN AVENUE, MIAMI BEACH, FL 33139

PROJECT: CHASE AVENUE AND W 34TH STREET PATH

ADDRESS: CITY OF MIAMI BEACH, FL

SUB-CONSULTANT

LA OF RECORD: CMJ
DESIGN LA: CMJ
DRAWN BY: AP
CHECKER: CMJ
SCALE: AS SHOWN

LANDSCAPE ARCHITECT OF RECORD:
CASTO MIGUEL JUNCAL
NO.6667184

NO.	DATE	REVISION	APP'D. BY
5			
4			
3			
2			
1			

Drawing Title: ELECTRICAL ONE-LINE, FEEDER AND PANEL SCHEDULES
Filename: E2.0-2021375.dwg
Date: Sheet: of

Drawing No.: E2.0

System No. C-AJ-1044

June 15, 2005
F Ratings - 2, 3, and 4 Hr (See Items 2A and 4)
T Rating - 0 Hr
L Rating At Ambient - 2 CFM/sq ft
L Rating At 400 F - less than 1 CFM/sq ft
W Rating - Class I (See Item 4)

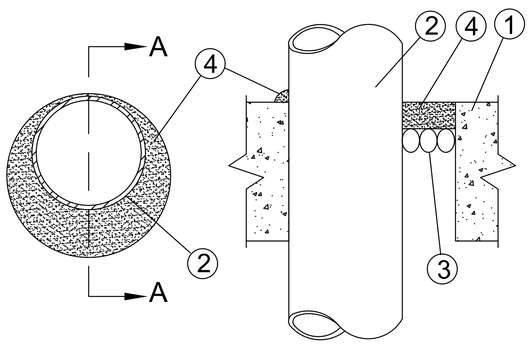

SECTION A-A

1. Floor or Wall Assembly - Lightweight or normal weight (100-150 pcf or 1600-2400 kg/m3) concrete. Except as noted in table under Item 4, min thickness of solid concrete floor or wall assembly is 4-1/2 in. (114 mm). Floor may also be constructed of any min 6 in. (152 mm) thick UL Classified hollow core Precast Concrete Units*. When floor is constructed of hollow core precast concrete units, packing material (Item 3) and caulk fill material (Item 4) to be installed symmetrically on both sides of floor, flush with floor surface. Wall assembly may also be constructed of any UL Classified Concrete Blocks*. Max diam of opening is in solid lightweight or normal weight concrete. Floor is 32 in. (813 mm). Max diam of opening in floor constructed of hollow-core precast concrete units is 7 in. (178 mm).

See Concrete Blocks (CAZT) and Precast Concrete Units (CFTV) categories in the Fire Resistance Directory for names of manufacturers.

1A. Steel Sleeve (Optional, not shown) - Max 15 in. (381 mm) ID (or smaller) Schedule 10 (or heavier) steel sleeve cast or grouted into floor or wall assembly. Sleeve may extend a max of 2 in. (51 mm) above top of floor or beyond either surface of wall. Max 16 in. (406 mm) ID (or smaller) min 0.028 (0.71 mm) wall thickness (or heavier) galvanized steel sleeve cast or grouted into floor or wall assembly. Sleeve may extend a max of 1/2 in. (13 mm) beyond either surface of floor or wall.

2. Through Penetrants - One metallic pipe, conduit or tubing to be installed either concentrically or eccentrically within the firestop system. Max annular space between pipe, conduit or tubing and edge of through opening or sleeve is dependent on the parameters shown in Item 4. Min annular space between pipe or conduit and edge of through opening is 0 in. (0 mm) (point contact). Pipe conduit or tubing to be rigidly supported on both sides of floor or wall assembly. The following types and sizes of metallic pipes, conduits or tubing may be used:

A. Steel Pipe - Nom 30 in. (762 mm) diam (or smaller) Schedule 10 (or heavier) steel pipe.
B. Iron Pipe - Nom 30 in. (762 mm) diam (or smaller) cast or ductile iron pipe.
C. Conduit - Nom 6 in. (152 mm) diam (or smaller) rigid steel conduit.
D. Conduit - Nom 4 in. (102 mm) diam (or smaller) steel electrical metallic tubing.
E. Copper - Tubing Nom 6 in. (152 mm) diam (or smaller) Type L (or heavier) copper tube.
F. Copper Pipe - Nom 6 in. (152 mm) diam (or smaller) Regular (or heavier) copper pipe.

3. Packing Material - Polyethylene backer rod or nom 1 in. (25 mm) thickness of tightly-packed mineral wool batt or glass fiber insulation firmly packed into opening as a permanent form. Packing material to be recessed from top surface of floor or from both surfaces of wall as required to accommodate the required thickness of caulk fill material (Item 4).

4. Fill,Void or Cavity Material* - Caulk or Sealant - Applied to fill the annular space flush with top surface of floor. In wall assemblies, required caulk thickness to be installed symmetrically on both sides of wall, flush with wall surface. At point contact location between penetrant and sleeve or between penetrant and concrete, a min 1/4 in. (6 mm) diam bead of caulk shall be applied at top surface of floor and at both surfaces of wall. The hourly F Ratings and the min required caulk thicknesses are dependent upon a number of parameters, as shown in the following table:

Min Floor or Wall Thkns In. (mm)	Nom Pipe Tube or Conduit Diam in. (mm)	Max Annular Space in. (mm)	Min Caulk Thkns in. (mm)	F Rating Hr
2-1/2 (64)	1/2-12 (13-305)	1-3/8 (35)	1/2 (13)	2
2-1/2 (64)	1/2-12 (13-305)	3-1/4 (83)	1 (25)	2
4-1/2 (114)	1/2-6 (13-152)	1-3/8 (35)	1/4 (6) (a)	2
4-1/2 (114)	1/2-12 (13-305)	1-1/4 (32)	1/2 (13)	3
4-1/2 (114)	1/2-20 (13-508)	2 (51)	1 (25)	3
4-1/2 (114)	1/2-20 (13-508)	2 (51)	1 (25)	3
4-1/2 (114)	1/2-12 (13-305)	3-1/4 (83)	1 (25)	3
4-1/2 (114)	22-30 (558-762)	2 (51)	2 (51)	3
5-1/2 (140)	1/2-6 (13-152)	1-3/8 (35)	1 (25) (b)	4

(a)Min 2 in. (51 mm) thickness of mineral wool batt insulation required in annular space.
(b)Min 1 in. (25 mm) thickness of mineral wool batt insulation required in annular space on both sides of floor or wall assembly. Min 1 in. (25 mm) thickness of caulk to be installed flush with each surface of floor or wall assembly.

3M COMPANY - CP 25WB+ caulk or FB-3000 WT sealant. (Note: W Rating applies only when FB-3000 WT sealant is used.)

*Bearing the UL Classification Marking

EMT THRU CONCRETE PENETRATION DETAIL
No Scale

1

* NOTE

THIS MATERIAL WAS EXTRACTED BY 3M FIRE PROTECTION PRODUCTS
FROM THE 2002 EDITION OF THE UL FIRE RESISTANCE DIRECTORY

SYSTEM NO C-AJ-1052
(FORMERLY SYSTEM NO. 337)
F RATING--2 HR
T RATING--0 HR

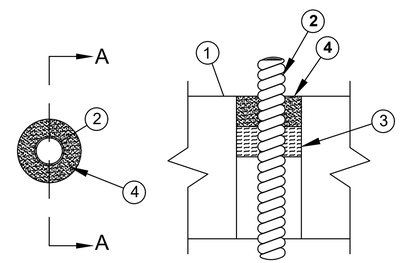

SECTION A-A

1. Floor or Wall Assembly - Min 4-1/2 in. thick lightweight or normal weight (100-150 pcf) concrete. Wall may also be constructed of any UL Classified Concrete Blocks*. Diam of circular through opening in floor or wall assembly to be 3/4 in. to 1-1/2 in. larger than diam of flexible metal conduit (Item 2) installed in through opening. Max diam of opening is 6 in.
See Concrete Blocks (CAZT) category in the Fire Resistance Directory for names of manufacturers.

2. Through Penetrating Product* - Nom 4 in. diam (or smaller) aluminum or steel Flexible Metal Conduit+ Max one flexible
metal conduit to be installed near center of circular through opening in floor or wall assembly. Flexible metal conduit to be rigidly supported on both sides of floor or wall assembly.
AFC CABLE SYSTEMS INC

3. Packing Material - Nom 1 in. thickness of ceramic (alumina silica) fiber blanket or mineral wool batt insulation firmly packed intoopening as a permanent form. Packing material to be recessed min 1 in. from top surface of floor or from both surfaces of wall.

4. Fill,Void or Cavity Material* - Caulk - Applied to fill the annular space around the flexible metal conduit. In floors, a min 1 in. depth of fill material to be installed flush with top surface of floor. In walls, a min 1 in. depth of fill material to be installed flush with wall surface on both sides of wall assembly.
MINNESOTA MINING & MFG CO - CP 25WB+
*Bearing the UL Classification Marking
**Please refer to the letter from UL on page 11.

MC CABLE THRU CONCRETE PENETRATION DETAIL
No Scale

2

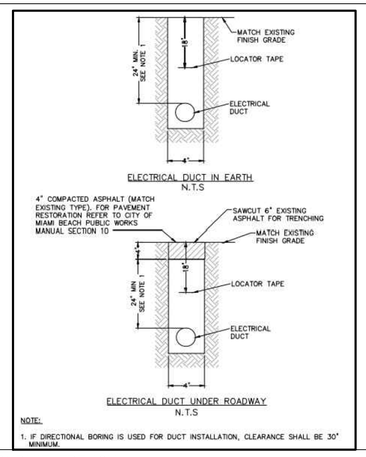

NOTE:
1. IF DIRECTIONAL BORING IS USED FOR DUCT INSTALLATION, CLEARANCE SHALL BE 30" MINIMUM.

CONDUIT TRENCH
No Scale

3

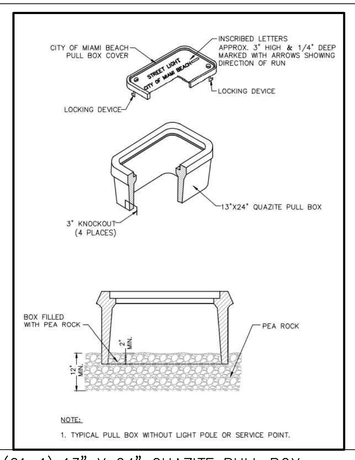

NOTE:
1. TYPICAL PULL BOX WITHOUT LIGHT POLE OR SERVICE POINT.

(21-1) 13" X 24" QUAZITE PULL BOX
No Scale

4

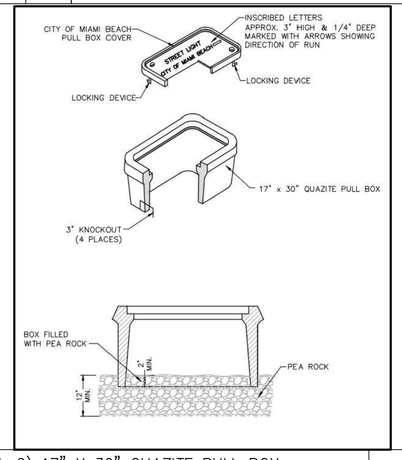

(21-2) 17" X 30" QUAZITE PULL BOX
No Scale

5

KEY PLAN (NOT TO SCALE):

SEAL:

Printed copies of this document are not considered signed and sealed and the SHA authentication code must be verified on any electronic copies.

This item has been digitally signed and sealed by Enrique Gomez, P.E. on the date adjacent to the seal.

Printed copies of this document are not considered signed and sealed and the signature must be verified on any electronic copies.

APPROVED :
FLA. REGISTRATION NO: DATE :

MIAMIBEACH
OFFICE OF CAPITAL IMPROVEMENT PROJECTS
1701 MERIDIAN AVENUE, MIAMI BEACH, FL.33139

PROJECT: CHASE AVENUE AND W 34TH STREET PATH
ADDRESS: CITY OF MIAMI BEACH, FL

SUB-CONSULTANT

LA OF RECORD CMJ
DESIGN LA: CMJ
DRAWN BY: AP
CHECKER: CMJ
SCALE: AS SHOWN

LANDSCAPE ARCHITECT OF RECORD:
CASTO MIGUEL JUNCAL
NO.6667184

NO.	DATE	REVISION	APP'D. BY
5			
4			
3			
2			
1			

Drawing Title: ELECTRICAL DETAILS
Filename: E3.0-2021375.dwg
Date: Sheet: of
Drawing No.: E3.0

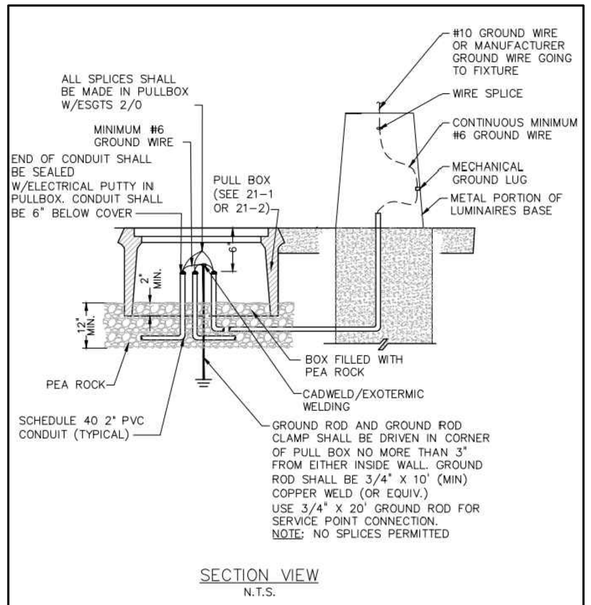

SECTION VIEW
N.T.S.

NOTES:

1. FOR PURPOSE OF CADWELDING, ALL GROUND WIRES MUST BE OF #6 AWG MINIMUM.

(21-5) PULL BOX GROUNDING DETAIL

N.T.S.

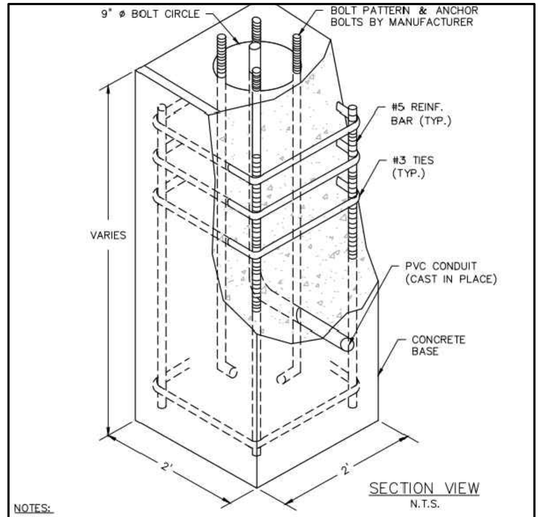

SECTION VIEW
N.T.S.

NOTES:

1. WIND DESIGN CRITERIA:
   RISK CATEGORY: II
   EXPOSURE CATEGORY: C
   WIND SPEED IN ACCORDANCE WITH THE HIGH VELOCITY WIND ZONE PER FLORIDA BUILDING CODE, LATEST EDITION.
2. THE CONTRACTOR SHALL INCLUDE WITH THE SHOP DRAWING SUBMITTAL A POLE WIND LOADING CALCULATION SIGNED AND SEALED BY A STRUCTURAL ENGINEER LICENSED IN THE STATE OF FLORIDA SHOWING THAT THE PROPOSED INSTALLATION WILL MEET THE WIND DESIGN CRITERIA LISTED ABOVE. CONTRACTOR SHALL ADJUST THE SIZE OF BASE AND DEPTH OF POLE AT NO ADDITIONAL COST TO MEET THE REQUIRED WIND LOADING.

TYPICAL POLE BASE DETAIL

N.T.S.

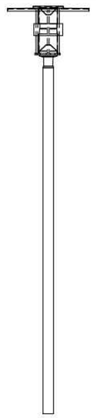

NOTES:

1. WIND DESIGN CRITERIA:
   RISK CATEGORY: II
   EXPOSURE CATEGORY: C
   WIND SPEED IN ACCORDANCE WITH THE HIGH VELOCITY WIND ZONE PER FLORIDA BUILDING CODE, LATEST EDITION.
2. THE CONTRACTOR SHALL INCLUDE WITH THE SHOP DRAWING SUBMITTAL A POLE WIND LOADING CALCULATION SIGNED AND SEALED BY A STRUCTURAL ENGINEER LICENSED IN THE STATE OF FLORIDA SHOWING THAT THE PROPOSED INSTALLATION WILL MEET THE WIND DESIGN CRITERIA LISTED ABOVE. CONTRACTOR SHALL ADJUST THE SIZE OF BASE AND DEPTH OF POLE AT NO ADDITIONAL COST TO MEET THE REQUIRED WIND LOADING.
3. PROVIDE MARINE GRADE COPPER MATERIAL, LOW COPPER CONTENT, WITH SALT SPRAY ASTM B117.
4. OVERALL HEIGHT: 14' – 16'.
5. FIXTURE TYPE NOT APPROVED FOR USE WITHIN COASTAL DISTRICTS.
6. REFER TO GROUNDING DETAIL ON 21-5.

TYPICAL FIXTURE "A" DETAIL

N.T.S.

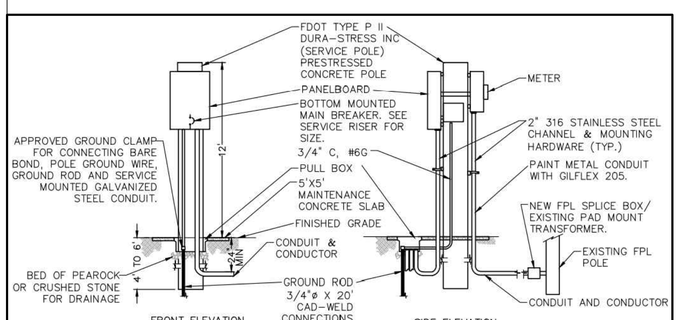

FRONT ELEVATION
N.T.S.

SIDE ELEVATION
N.T.S.

NOTES:

1. CONTRACTOR SHALL VERIFY POLE SIZE AND LOCATION WITH OWNER PRIOR TO INSTALLATION.
2. F.D.O.T. APPROVED POLES, S641-0700 & S641-0100.
3. WIRING COLOR CODE TO BE USED (SEE 21-20).
4. CONTRACTOR SHALL VERIFY FLOOD ELEVATION.
5. WIND DESIGN CRITERIA: RISK CATEGORY: II; EXPOSURE CATEGORY: C; WIND SPEED IN ACCORDANCE WITH THE HIGH VELOCITY WIND ZONE PER FLORIDA BUILDING CODE, LATEST EDITION.
6. WIND LOADING CALCULATION SIGNED AND SEALED BY A STRUCTURAL ENGINEER LICENSED IN THE STATE OF FLORIDA SHOWING THAT THE PROPOSED INSTALLATION WILL MEET THE WIND DESIGN CRITERIA LISTED ABOVE MUST BE PROVIDED. CONTRACTOR SHALL ADJUST THE SIZE OF BASE AND DEPTH OF POLE AT NO ADDITIONAL COST TO MEET THE REQUIRED WIND LOADING.
7. DISCONNECT FOR STREET LIGHT SHALL BE KEPT SEPARATE FROM DISCONNECT FOR IRRIGATION SYSTEM.

GRADE MOUNTED EQUIPMENT RACK DETAIL | 1

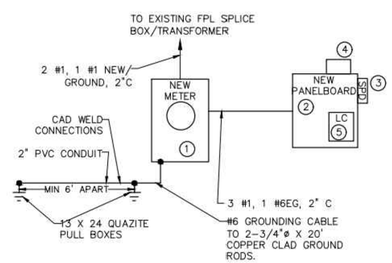

SERVICE POINT INSTALLATION NOTES:

1. CONTRACTOR SHOULD PROVIDE AND INSTALL 1-NEW 100 AMP, 120/240V METER IN A NEMA 4X ALUMINUM ENCLOSURE MOUNTED ON THE NEW CONCRETE POLE PER FPL STANDARDS AND REQUIREMENTS. CONTRACTOR SHALL MAKE ALL CONNECTIONS NECESSARY FOR A COMPLETE WORKING SYSTEM IN PLACE.
2. CONTRACTOR SHALL PROVIDE AND INSTALL 1-NEW 100A RATED, 120/240V SINGLE PHASE SERVICE RATED PANELBOARD WITH A BOTTOM MOUNTED 100A MAIN BREAKER IN A NEMA 4X 316 STAINLESS STEEL LOCKABLE ENCLOSURE MOUNTED ON THE NEW CONCRETE POLE. CONTRACTOR SHALL MAKE ALL CONNECTIONS NECESSARY FOR A COMPLETE WORKING SYSTEM IN PLACE.
3. CONTRACTOR SHALL PROVIDE AND INSTALL 1-NEW EXTERNAL MOUNTED 50KA SURGE PROTECTIVE DEVICE (SPD) IN A NEMA 4X 316 STAINLESS STEEL ENCLOSURE. CONTRACTOR SHALL INSTALL SPD PER MANUFACTURE RECOMMENDATION FOR A COMPLETE WORKING SYSTEM.
4. PHOTO CELL LIGHT CONTROLS.
5. LIGHTING CONTACTOR.

SERVICE ENTRANCE MOUNTING DETAIL | 2

WIRING COLOR CODE:

120/240V 3ø	120/208V 3ø	270/480V 3ø
A-BLACK	A-BLACK	A-BROWN
B-ORANGE	B-RED	B-ORANGE
C-RED	C-BLUE	C-YELLOW
N-WHITE	N-WHITE	N-GREY
G-GREEN	G-GREEN	G-GREEN
120/240V 1ø	**120/208V 1ø**	**480V TO GROUND**
A-BLACK	A - BLACK	UNGROUNDED-ORANGE
B-RED	B - RED	GROUNDED (N)-GREY
N-WHITE	N - WHITE	GROUND (G)-GREEN
G-GREEN	G - GREEN	

A
B – UNGROUNDED (HOT)
C
N – GROUNDED (NEUTRAL)
G – GROUND

#6 OR SMALLER NEEDS TO BE A SOLID COLOR

WIRING COLOR CODE

This item has been digitally signed and sealed by Enrique Gomez, P.E. on the date adjacent to the seal.

Printed copies of this document are not considered signed and sealed and the signature must be verified on any electronic copies.

KEY PLAN (NOT TO SCALE):

SEAL:

Printed copies of this document are not considered signed and sealed and the SHA authentication code must be verified on any electronic copies.

APPROVED: _____
FLA. REGISTRATION NO. _____ DATE: _____

MIAMIBEACH
OFFICE OF CAPITAL IMPROVEMENT PROJECTS
1701 MERIDIAN AVENUE, MIAMI BEACH, FL.33139

PROJECT: CHASE AVENUE AND W 34TH STREET PATH
ADDRESS: CITY OF MIAMI BEACH, FL

SUB-CONSULTANT

LA OF RECORD: CMJ
DESIGN LA: CMJ
DRAWN BY: AP
CHECKER: CMJ
SCALE: AS SHOWN

LANDSCAPE ARCHITECT OF RECORD:
CASTO MIGUEL JUNCAL
NO.6667184

NO.	DATE	REVISION	APP'D. BY
5			
4			
3			
2			
1			

Drawing Title: ELECTRICAL DETAILS
Filename: E3.0-2021375.dwg
Date: Sheet: of
Drawing No.: E3.1