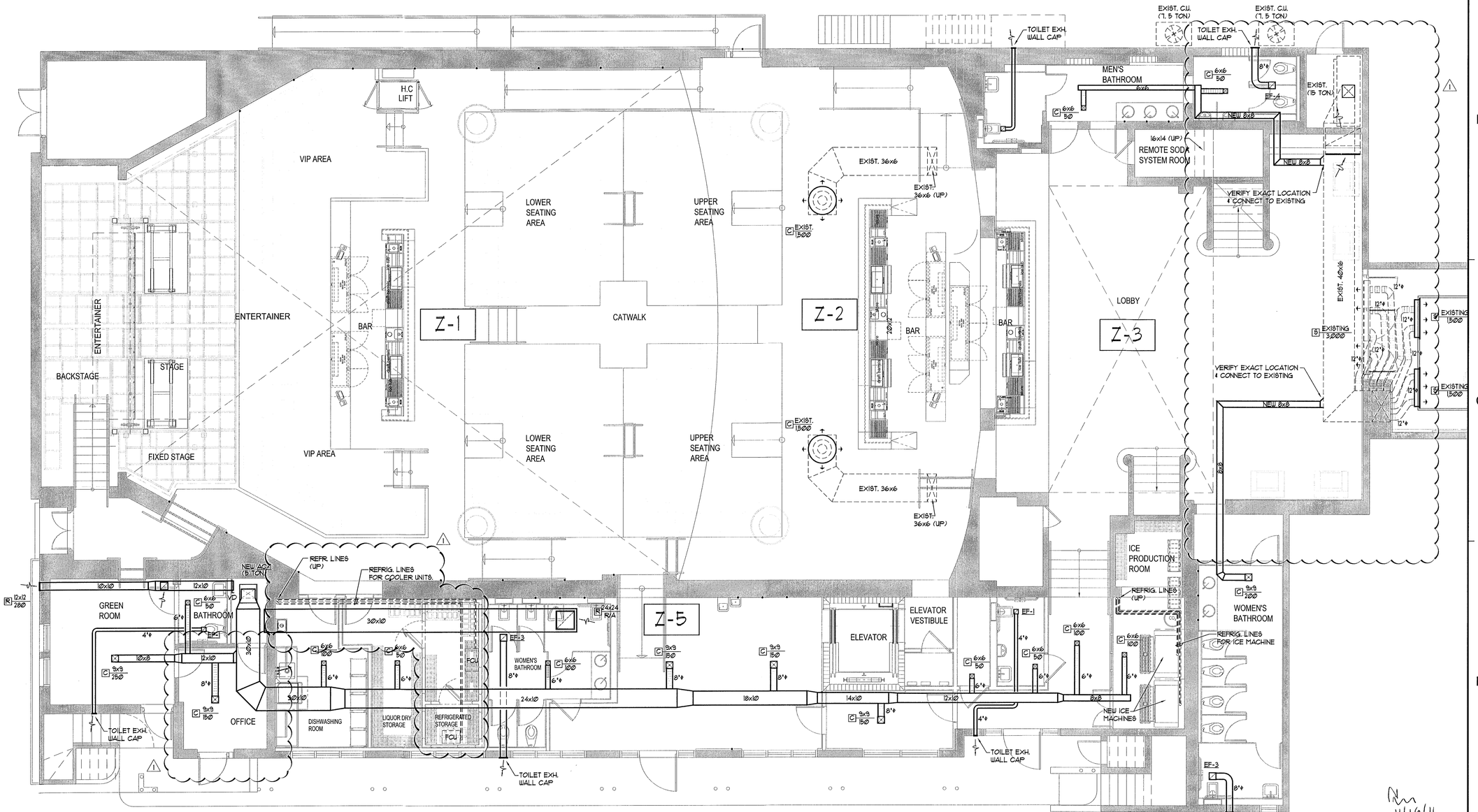

GROUND FLOOR PLAN

SCALE: 3/16"=1'-0"

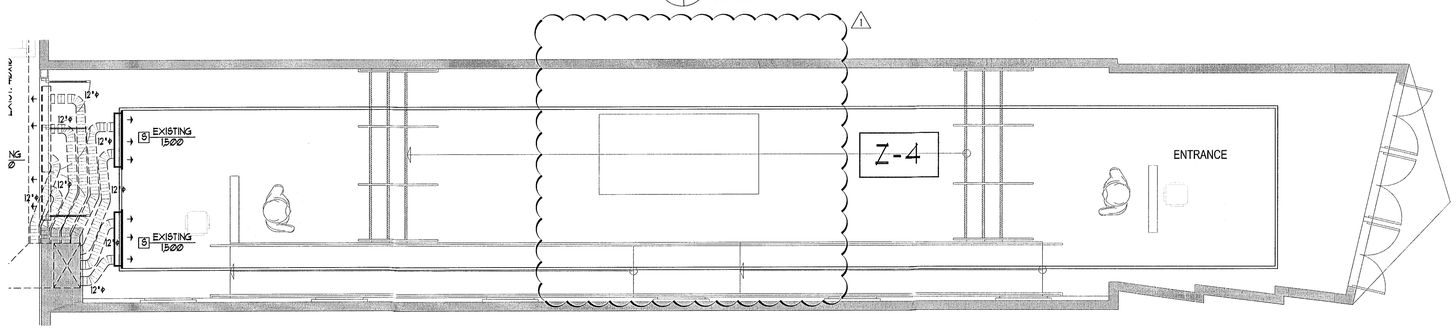

THESE PLANS ARE FOR BUILDING DEPARTMENT REVIEW. THEY ARE NOT TO BE CONSTRUED AS FINAL CONSTRUCTION DOCUMENTS UNTIL ALL BUILDING DEPARTMENT APPROVALS ARE OBTAINED AND COMMENTS INCORPORATED INTO THESE DWGS. DUE TO THE VARIATIONS IN INTERPRETATIONS OF THE CODE THAT OCCUR IN DIFFERENT MUNICIPALITIES FINAL APPROVAL AND REVIEW IS NEEDED TO ASSURE COMPLIANCE WITH THE APPLICABLE CODES AND STANDARDS.

11/16/11

9-8-11
PERMIT SET

ANTONIO FRANYIE LICENSED No. 11640 STATE OF FLORIDA PROFESSIONAL ENGINEER

FRANYIE ENGINEERS INC.
ANTONIO FRANYIE PE #11640 MECH
VIVIANA FRANYIE PE #49985 ME
Certificate of Authorization # 00002906
10810 NW 27 Street, Miami FL 33172
TEL: (305) 592-1360 FAX: (305) 594-9279
www.franyieengineers.com
DESIGN | DRAWN | 9-8-11
JOB NUMBER 11-210

FD PRINTED: Nov 3 2011

REVISIONS / SUBMISSIONS

1	11-2-11 BD/COORD.	AAF

1151

ALL DRAWINGS AND WRITTEN MATERIAL APPEARING HEREIN CONSTITUTE THE ORIGINAL AND UNPUBLISHED WORK OF KOBI KARP AIA, AND MAY NOT BE DUPLICATED, USED, OR DISCLOSED WITHOUT THE EXPRESS WRITTEN CONSENT OF KOBI KARP ARCHITECTURE & INTERIOR DESIGN, INC. AIA. (c) 2011

BAMBOO GROUP INC.

550 WASHINGTON AVENUE
MIAMI BEACH, FLORIDA

GROUND FLOOR PLAN

Lic. # AR0012578

ARCHITECTURE
INTERIOR DESIGN
PLANNING

AIA ASID NCARB

2915 Biscayne Boulevard
Suite 200
Miami, Florida 33137
O: 305.573.1818
F: 305.573.3766

WWW.KOBIKARP.COM

K • B I
K A R P

DRAWN BY:	MD,JO
CHECKED BY:	JG
DATE:	09-08-11

M-100

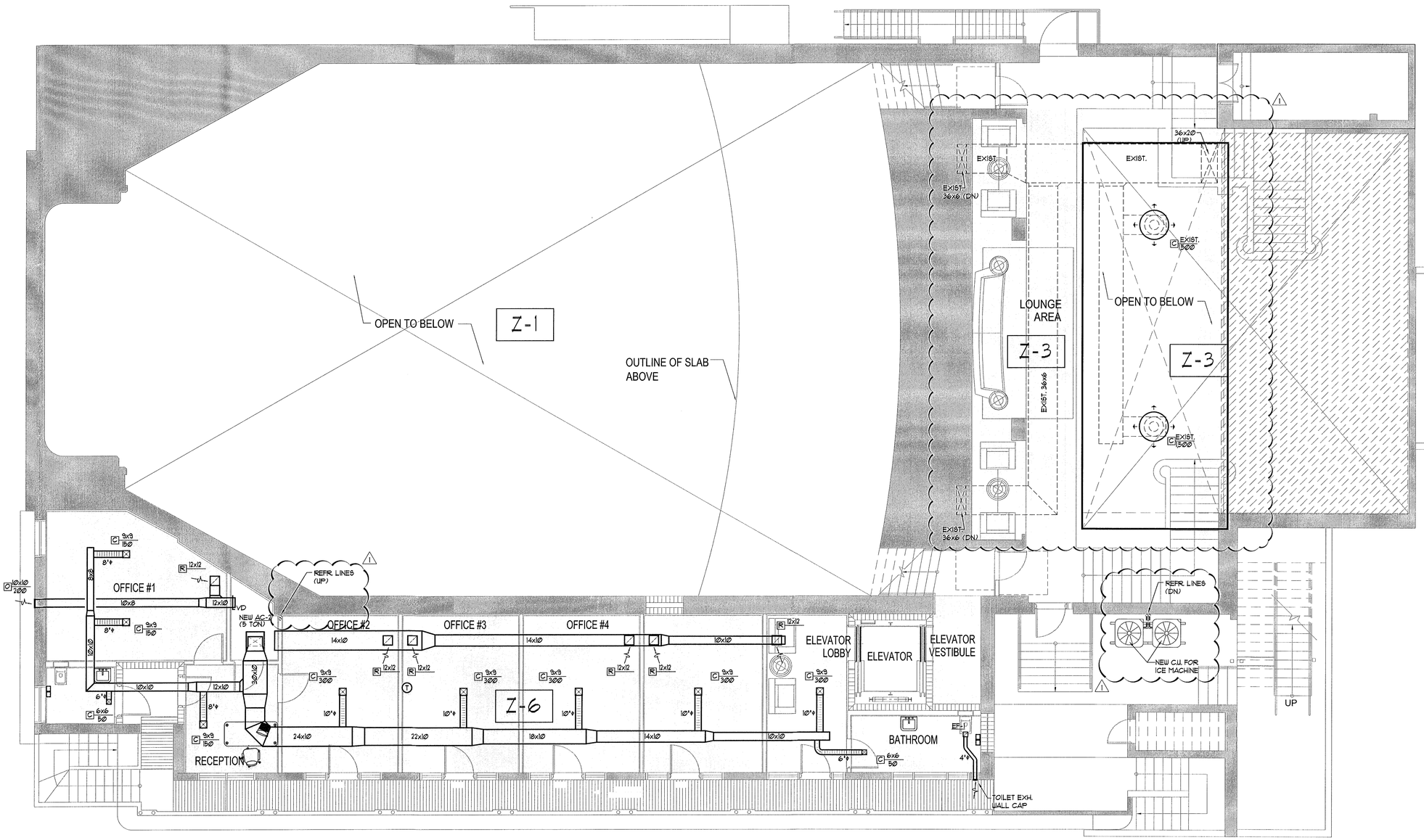

SECOND FLOOR PLAN

SCALE: 3/16"=1'-0"

11/16/11

9-8-11
PERMIT SET

THESE PLANS ARE FOR BUILDING DEPARTMENT REVIEW. THEY ARE NOT TO BE CONSTRUED AS FINAL CONSTRUCTION DOCUMENTS UNTIL ALL BUILDING DEPARTMENT APPROVALS ARE OBTAINED AND COMMENTS INCORPORATED INTO THESE DWGS. DUE TO THE VARIATIONS IN INTERPRETATIONS OF THE CODE THAT OCCUR IN DIFFERENT MUNICIPALITIES FINAL APPROVAL AND REVIEW IS NEEDED TO ASSURE COMPLIANCE WITH THE APPLICABLE CODES AND STANDARDS.

ANTONIO FRANYIE LICENSE No. 11640 STATE OF FLORIDA PROFESSIONAL ENGINEER
Nov. 13 2011

FRANYIE ENGINEERS INC.
ANTONIO FRANYIE PE #11640 MECH
VIVIANA FRANYIE PE #49985 ME
Certificate of Authorization # 00002906
10610 NW 27 Street, Miami Fl. 33172
TEL: (305) 592-1360 FAX: (305) 594-9279
www.franyieengineers.com
DESIGN | DRAWN | 9-8-11
JOB NUMBER 11-210

RE: PRINTED from : 3 2011

REVISIONS / SUBMISSIONS

1	11-2-11 BD/COORD.	AAF

1151

ALL DRAWINGS AND WRITTEN MATERIAL APPEARING HEREIN CONSTITUTE THE ORIGINAL AND UNPUBLISHED WORK OF KOBI KARP AIA, AND MAY NOT BE DUPLICATED, USED, OR DISCLOSED WITHOUT THE EXPRESS WRITTEN CONSENT OF KOBI KARP ARCHITECTURE & INTERIOR DESIGN, INC. AIA. (c) __2011__

BAMBOO GROUP INC.
550 WASHINGTON AVENUE
MIAMI BEACH, FLORIDA

SECOND FLOOR PLAN

Lic. # AR0012578

ARCHITECTURE
INTERIOR DESIGN
PLANNING

AIA ASID NCARB

2915 Biscayne Boulevard
Suite 200
Miami, Florida 33137
O: 305.573.1818
F: 305.573.3766

WWW.KOBIKARP.COM

K • B I
K A R P

DRAWN BY:	MD,JO
CHECKED BY:	JG
DATE:	09-08-11

M-101

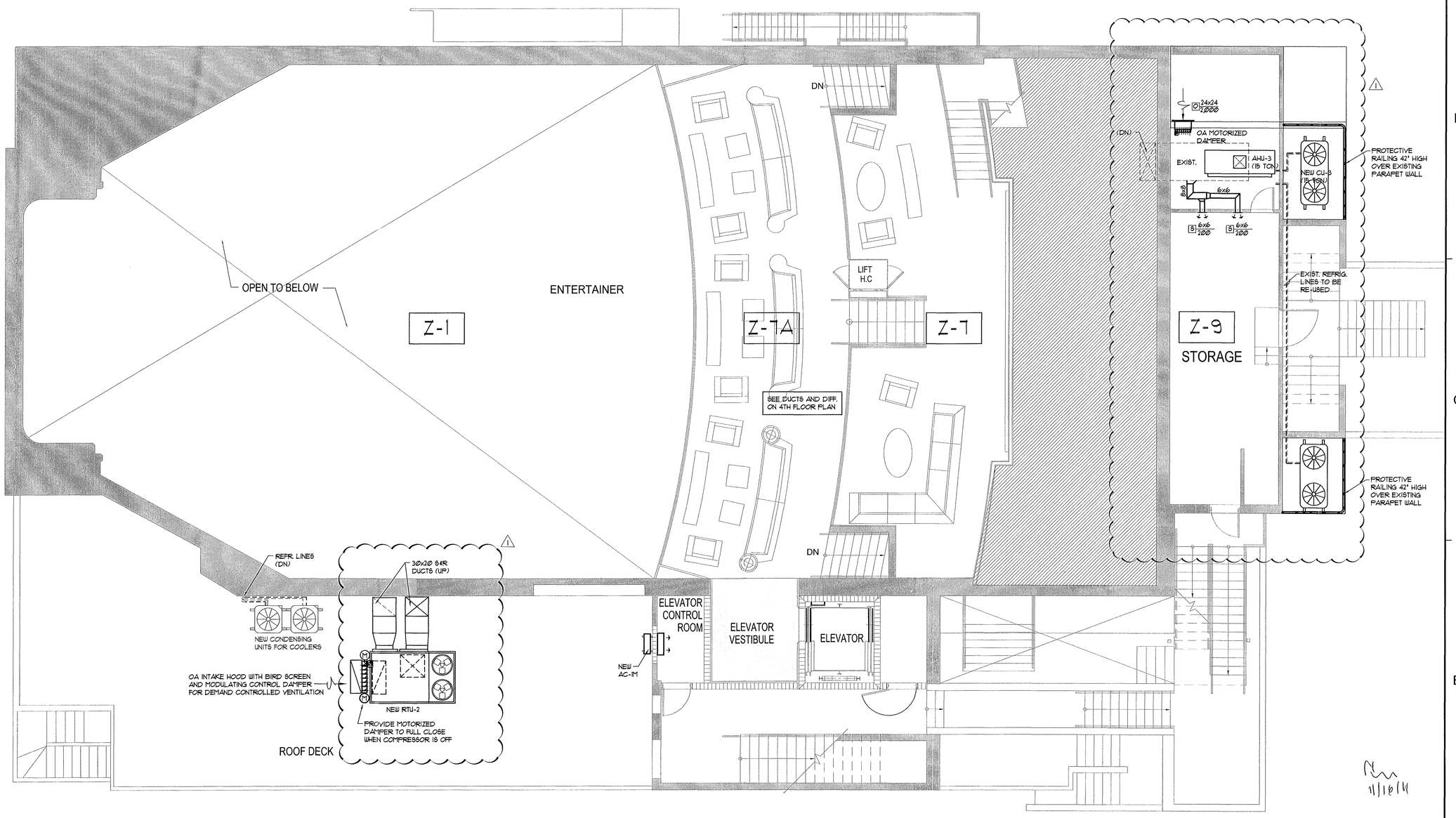

THIRD FLOOR PLAN

SCALE: 3/16"=1'-0"

9-8-11
PERMIT SET

THESE PLANS ARE FOR BUILDING DEPARTMENT REVIEW. THEY ARE NOT TO BE CONSTRUED AS FINAL CONSTRUCTION DOCUMENTS UNTIL ALL BUILDING DEPARTMENT APPROVALS ARE OBTAINED AND COMMENTS INCORPORATED INTO THESE DWGS. DUE TO THE VARIATIONS IN INTERPRETATIONS OF THE CODE THAT OCCUR IN DIFFERENT MUNICIPALITIES FINAL APPROVAL AND REVIEW IS NEEDED TO ASSURE COMPLIANCE WITH THE APPLICABLE CODES AND STANDARDS.

FRANYIE ENGINEERS INC.
ANTONIO FRANYIE PE #11640 MECH
VIVIANA FRANYIE PE #49985 ME
Certificate of Authorization # 00002906
10610 NW 27 Street, Miami, FL 33172
TEL: (305) 592-1360 FAX: (305) 594-0279
www.franyieengineers.com

DESIGN	DRAWN	9-8-11
JOB NUMBER		11-210

Nov 3, 2011

REVISIONS / SUBMISSIONS

1	11-2-11 BD/COORD.	AAF

1151

ALL DRAWINGS AND WRITTEN MATERIAL APPEARING HEREIN CONSTITUTE THE ORIGINAL AND UNPUBLISHED WORK OF KOBI KARP AIA, AND MAY NOT BE DUPLICATED, USED, OR DISCLOSED WITHOUT THE EXPRESS WRITTEN CONSENT OF KOBI KARP ARCHITECTURE & INTERIOR DESIGN, INC. AIA, BD __ 2011 __

BAMBOO GROUP INC.
550 WASHINGTON AVENUE
MIAMI BEACH, FLORIDA

THIRD FLOOR PLAN

Lic. # AR0012578

ARCHITECTURE
INTERIOR DESIGN
PLANNING

AIA ASID NCARB

2915 Biscayne Boulevard
Suite 200
Miami, Florida 33137
O: 305.573.1818
F: 305.573.0766

WWW.KOBIKARP.COM

K • B I
KARP

DRAWN BY:	MD,JO
CHECKED BY:	JG
DATE:	09-08-11

M-102

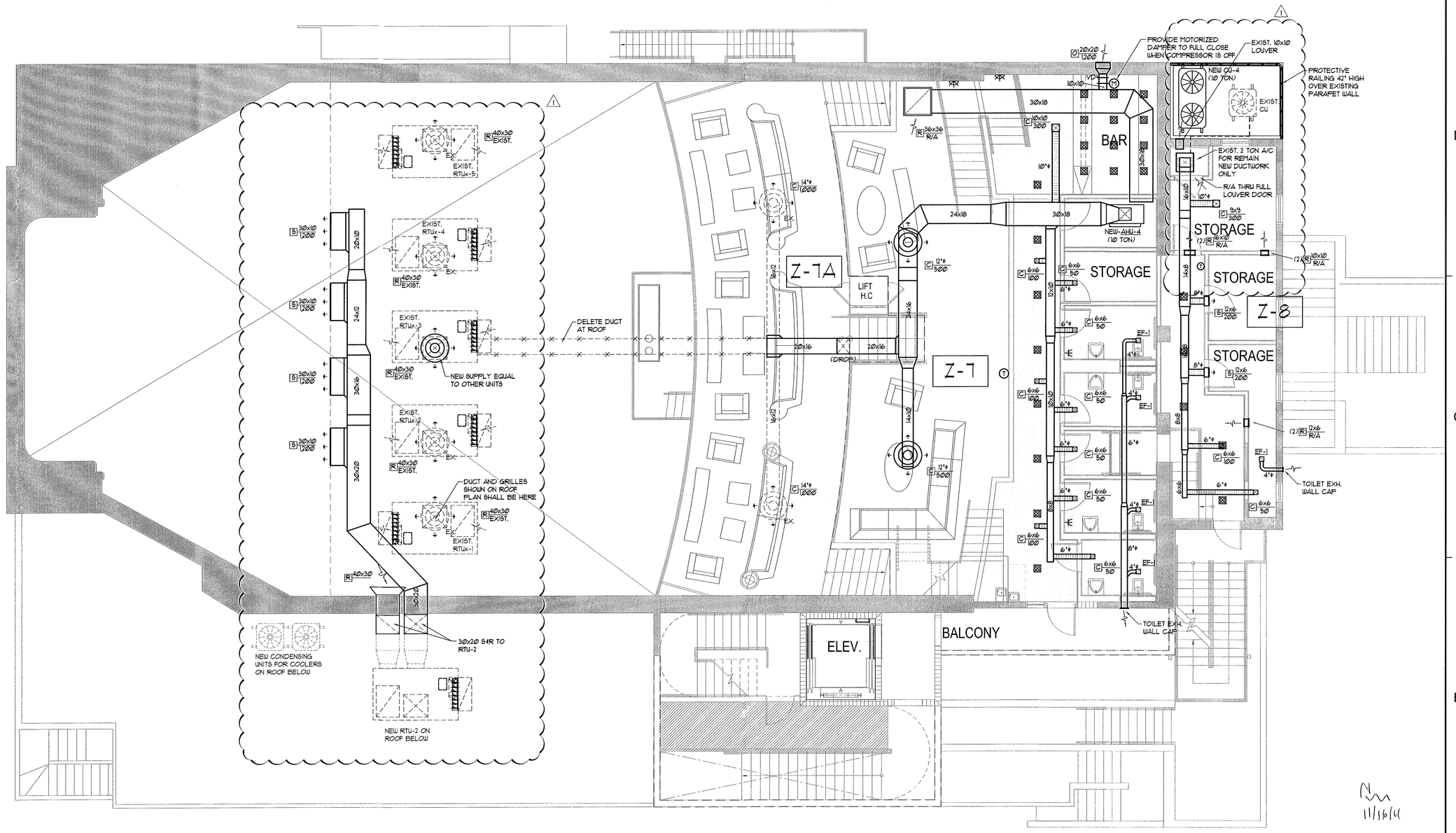

FOURTH FLOOR PLAN

SCALE: 3/16"=1'-0"

9-8-11
PERMIT SET

THESE PLANS ARE FOR BUILDING DEPARTMENT REVIEW. THEY ARE NOT TO BE CONSTRUED AS FINAL CONSTRUCTION DOCUMENTS UNTIL ALL BUILDING DEPARTMENT APPROVALS ARE OBTAINED AND COMMENTS INCORPORATED INTO THESE DWGS. DUE TO THE VARIATIONS IN INTERPRETATIONS OF THE CODE THAT OCCUR IN DIFFERENT MUNICIPALITIES FINAL APPROVAL AND REVIEW IS NEEDED TO ASSURE COMPLIANCE WITH THE APPLICABLE CODES AND STANDARDS.

FRANYIE ENGINEERS INC.
ANTONIO FRANYIE PE #11640 MECH
VIVIANA FRANYIE PE #49985 ME
Certificate of Authorization # 00002906
10610 NW 27 Street, Miami FL 33172
TEL: (305) 592-1360 FAX: (305) 594-9279
www.franyieengineers.com
DESIGN | DRAWN
9-8-11
JOB NUMBER 11-210

FD PRINTED: Nov 3 2011

Nov 3 2011

REVISIONS / SUBMISSIONS

1	11-2-11 BD/COORD.	AAF

1151

ALL DRAWINGS AND WRITTEN MATERIAL APPEARING HEREIN CONSTITUTE THE ORIGINAL AND UNPUBLISHED WORK OF KOBI KARP AIA, AND MAY NOT BE DUPLICATED, USED, OR DISCLOSED WITHOUT THE EXPRESS WRITTEN CONSENT OF KOBI KARP ARCHITECTURE & INTERIOR DESIGN, INC. AIA. (c) __2011__

BAMBOO GROUP INC.
550 WASHINGTON AVENUE
MIAMI BEACH, FLORIDA

FOURTH FLOOR PLAN

Lic. # AR0012573

ARCHITECTURE
INTERIOR DESIGN
PLANNING
AIA ASID NCARB
2915 Biscayne Boulevard
Suite 300
Miami, Florida 33137
O: 305.573.1818
F: 305.573.3766
WWW.KOBIKARP.COM

K • B I K A R P

DRAWN BY:	MD,JO
CHECKED BY:	JG
DATE:	09-08-11

M-103

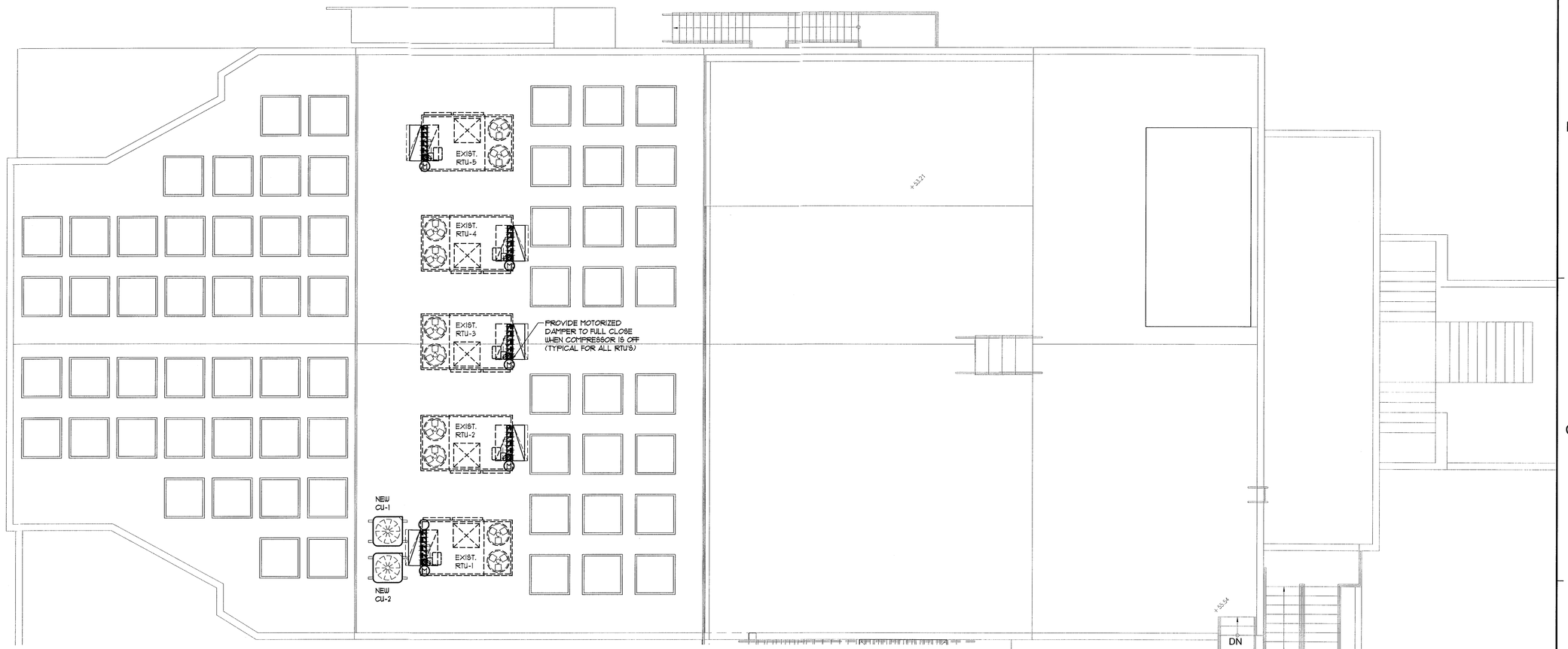

ROOF PLAN

SCALE: 3/16"=1'-0"

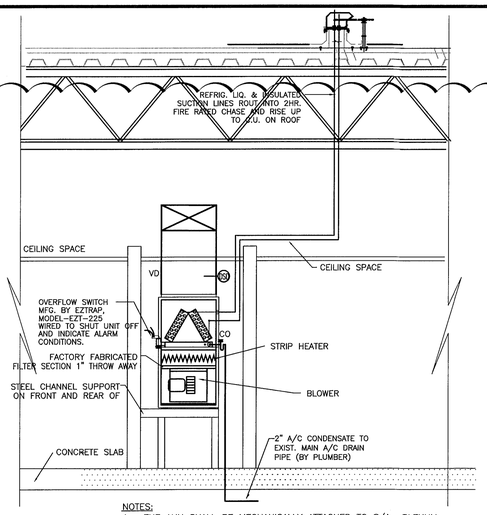

NOTES:

1.– THE AHU SHALL BE MECHANICALLY ATTACHED TO S/A PLENUM (FMC 603.7)

2.– 4" MIN. CLEARANCE ALL AROUND THE AHU (FMC 603.1.3) (FMC 603.7)

3.– CONDENSATE DRAIN CONN., TRAPPING, AND OVERFLOE AS PER (FMC 307.2.2 TO 307.2.5)

4.– ALL MATERIALS INSIDE CLOSET TO BE INCOMBUTIBLE PLENUM RATED. PROVIDE COPPER A/C CONDENSATE W/ FIRE RATED INSULATION.

5.– R/A THRU NON COMBUSTIBLE FULL LOUVERED DOOR

1 M-104 TYPICAL A/C EQUIPMENT CLOSET
NTS

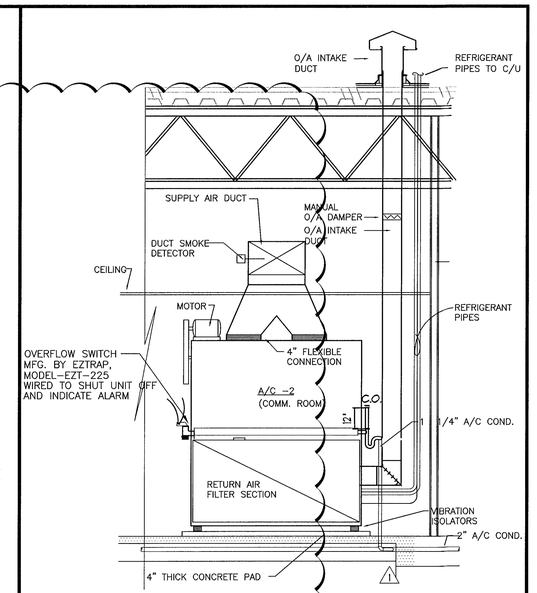

2 M-104 A.H.U. MOUNTING DETAIL
NTS

THESE PLANS ARE FOR BUILDING DEPARTMENT REVIEW. THEY ARE NOT TO BE CONSTRUED AS FINAL CONSTRUCTION DOCUMENTS UNTIL ALL BUILDING DEPARTMENT APPROVALS ARE OBTAINED AND COMMENTS INCORPORATED INTO THESE DWGS. DUE TO THE VARIATIONS IN INTERPRETATIONS OF THE CODE THAT OCCUR IN DIFFERENT MUNICIPALITIES FINAL APPROVAL AND REVIEW IS NEEDED TO ASSURE COMPLIANCE WITH THE APPLICABLE CODES AND STANDARDS.

REVISIONS / SUBMISSIONS

1 11-2-11 BD/COORD. AAF

1151

ALL DRAWINGS AND WRITTEN MATERIAL APPEARING HEREIN CONSTITUTE THE ORIGINAL AND UNPUBLISHED WORK OF KOBI KARP AIA, AND MAY NOT BE DUPLICATED, USED, OR DISCLOSED WITHOUT THE EXPRESS WRITTEN CONSENT OF KOBI KARP ARCHITECTURE & INTERIOR DESIGN, INC. AIA (c) __2011__

BAMBOO GROUP INC.
550 WASHINGTON AVENUE
MIAMI BEACH, FLORIDA

ROOF FLOOR PLAN

Lic. # AR0012578

ARCHITECTURE
INTERIOR DESIGN
PLANNING
AIA ASID NCARB
2915 Biscayne Boulevard
Suite 203
Miami, Florida 33137
O: 305.573.1818
F: 305.573.3766
WWW.KOBIKARP.COM

11/16/11

9-8-11
PERMIT SET

FRANYIE ENGINEERS INC.
ANTONIO FRANYIE PE #11640 MECH
WIMMA FRANYIE PE #49985 ME
Certificate of Authorization # 00002906
10810 NW 27 Street, Miami FL 33172
TEL: (305) 592-1360 FAX: (305) 594-9279
www.franyieengineers.com

DESIGN | DRAWN | 9-8-11
JOB NUMBER 11-210

ANTONIO FRANYIE LICENSE No. 11640 STATE OF FLORIDA PROFESSIONAL ENGINEER
Nov 3 2011

FD PRINTED: Nov 3 2011

DRAWN BY:	MD,JO
CHECKED BY:	JG
DATE:	09-08-11

M-104

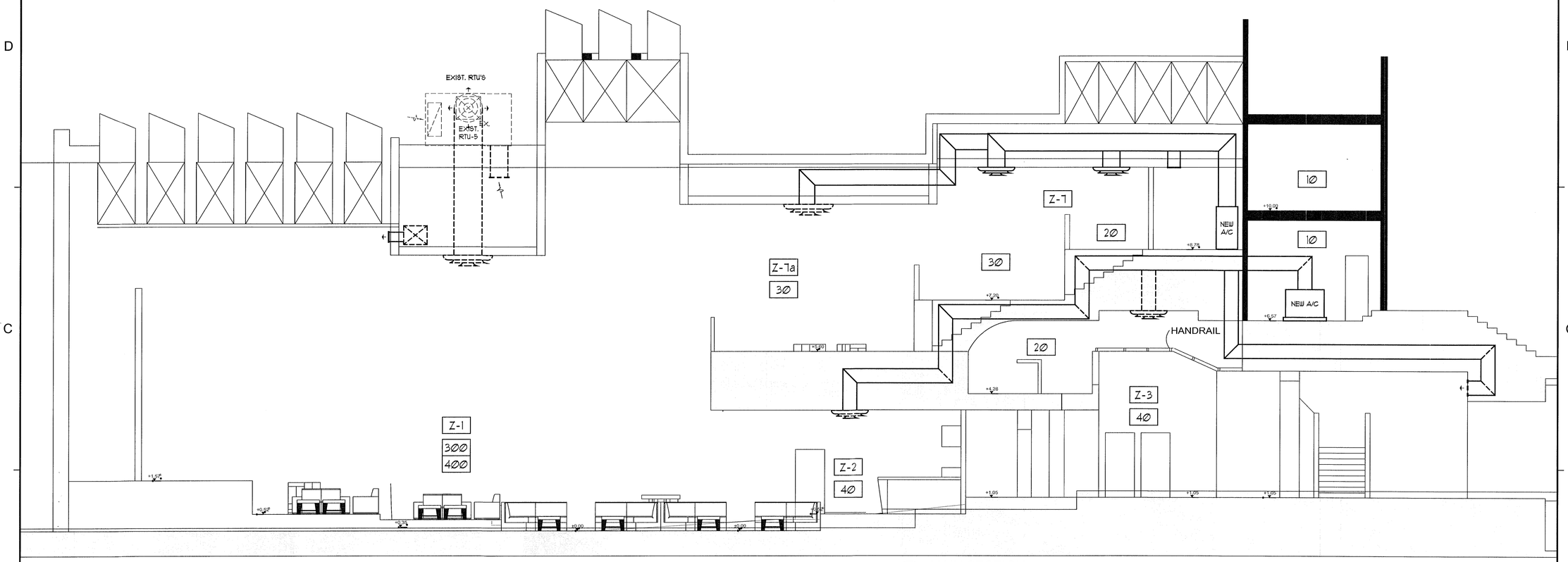

MAIN SECTION

SCALE: 3/16"=1'-0"

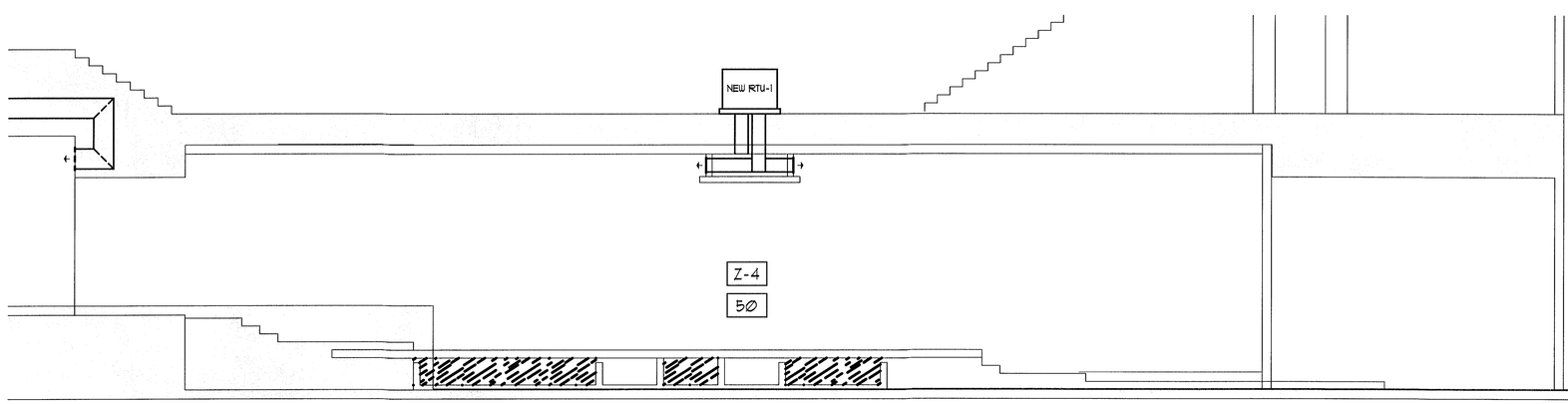

ENTRANCE SECTION

SCALE: 3/16"=1'-0"

11/14/11

9-8-11
PERMIT SET

THESE PLANS ARE FOR BUILDING DEPARTMENT REVIEW. THEY ARE NOT TO BE CONSTRUED AS FINAL CONSTRUCTION DOCUMENTS UNTIL ALL BUILDING DEPARTMENT APPROVALS ARE OBTAINED AND COMMENTS INCORPORATED INTO THESE DWGS. DUE TO THE VARIATIONS IN INTERPRETATIONS OF THE CODE THAT OCCUR IN DIFFERENT MUNICIPALITIES FINAL APPROVAL AND REVIEW IS NEEDED TO ASSURE COMPLIANCE WITH THE APPLICABLE CODES AND STANDARDS.

ANTONIO FRANYIE
LICENSE
No. 11640
STATE OF FLORIDA
Nov 3 2011
VIVIANA ENGINEER

FRANYIE ENGINEERS INC.
ANTONIO FRANYIE
PE #11640 MECH
VIVIANA FRANYIE
PE #49865 ME
Certificate of Authorization # 00002906
10610 NW 27 Street, Miami FL 33172
TEL: (305) 592-1360 FAX: (305) 594-9279
www.franyieengineers.com

DESIGN	DRAWN	
		9-8-11
JOB NUMBER		11-210

FB PRINTED: Nov 3 2011

REVISIONS / SUBMISSIONS

1151

ALL DRAWINGS AND WRITTEN MATERIAL APPEARING HEREIN CONSTITUTE THE ORIGINAL AND UNPUBLISHED WORK OF KOBI KARP AIA, AND MAY NOT BE DUPLICATED, USED, OR DISCLOSED WITHOUT THE EXPRESS WRITTEN CONSENT OF KOBI KARP ARCHITECTURE & INTERIOR DESIGN, INC. AIA. (c) 2011

BAMBOO GROUP INC.
550 WASHINGTON AVENUE
MIAMI BEACH, FLORIDA

SECTIONS

Lic. # AR0012578

ARCHITECTURE
INTERIOR DESIGN
PLANNING
AIA ASID NCARB
2915 Biscayne Boulevard
Suite 200
Miami, Florida 33137
O: 305.573.1818
F: 305.573.3766
WWW.KOBIKARP.COM

K • B I K A R P

DRAWN BY:	MD,JO
CHECKED BY:	JG
DATE:	09-08-11

M-200

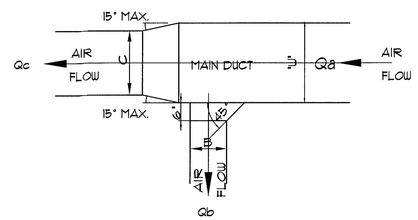

$Qb/Qc < 0.4$

SMALL TAKE-OFF

1 M-300 BRANCH TAKE-OFF AND REDUCER

N.T.S.

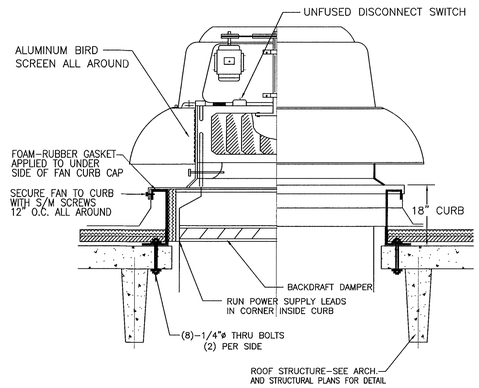

2 M-300 CENTRIFUGAL ROOF EXHAUST FAN

N.T.S.

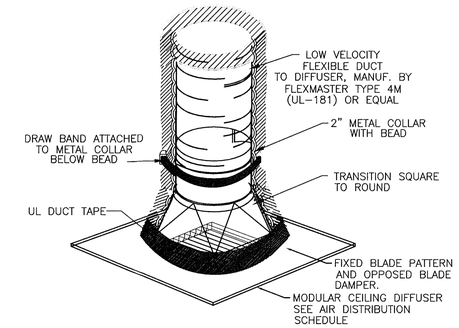

3 M-300 DIFFUSER & CONNECTOR DETAIL

N.T.S.

WIND LOAD CALCULATIONS:

DESIGN WIND PRESSURE AT 35 FT. HEIGHT - 33.5 PSF
GF. = 2.0
DESIGN WIND PRESSURE = 67.0 PSF

CONDENSING UNIT AREA = 4.3x3.1 = 14.1 SF
Mo = 67.0 PSF x 14.1 SF x 3.13 FT = 2,946 FT-LB.
Fr = 1,000 x 1.5 FT. / 3 FT - 1/2 W = 436 LB.
Fs = 67.0 PSF x 7.5 SF x 1.5 FT = 1,414 LB.

ALLOWABLE STRESS FOR ONE TAPCON 3/8" THRU BOLT IN 2,000 PSI CONCRETE = Fr = 190 LB.
Fs = 325 LB.

PROVIDE (4) 1"x1/4" WELDS PER LEG

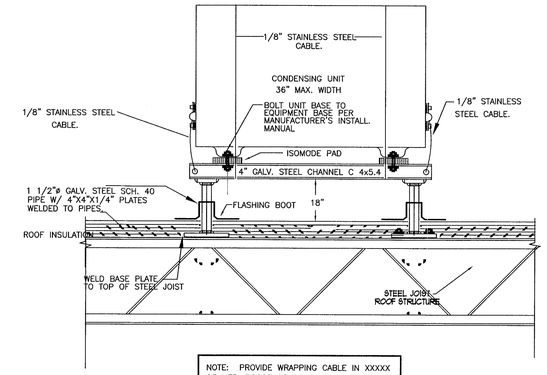

NOTE: PROVIDE WRAPPING CABLE IN XXXXX OF MFR. PROOF OF COSTRUCTION TO RESIST WIND VELOCITIES PER NEW CODE.

4 M-300 CONDENSING UNIT MOUNTING DETAIL

NOTE:
SPACE PERMITTING, CONTRACTOR MAY USE RADIUS ELBOW. SEE RADIUS ELBOW DETAIL.

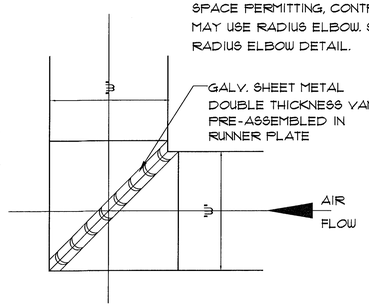

5 M-300 90° SQUARE ELBOW

N.T.S.

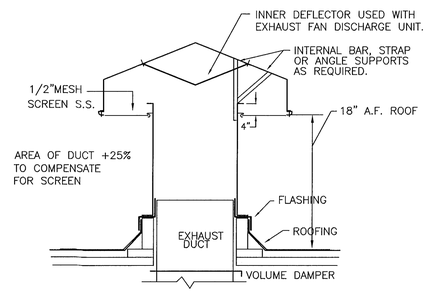

NOTE:
DISCHARGE HEIGHT OF TO BE 18" ABOVE ROOF

6 M-300 ROOF VENT DETAIL

N.T.S.

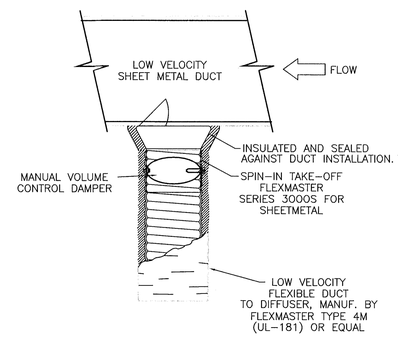

7 M-300 SIDE OR BOTTOM TAP DUCT CONNECTION DETAIL

N.T.S.

WIND LOAD CALCULATION

DESIGN WIND PRESSURE AT 35 FT. HEIGHT = 33.5 PSF
GF = 2.0
DESIGN WIND PRESSURE ——— 67.0 PSF
CONDENSING UNIT AREA ——— 34.06 SF
EQUIPMENT WEIGHT ——— 750 Lbs.
DIST. BETWEEN SUPPORTS (DS) ——— 4 FT.
ATTACH UNIT TO ROOF CURB W/ [illegible] (@ TOTAL ALL AROUND)

Fr. ——— 919. Lbs.
Fs. ——— 2,280 Lbs.
AVAILABLE Fr. ——— 3,500 Lbs.
AVAILABLE Fs. ——— 3,500 Lbs.
REQUIRED [illegible] ——— 919 Lbs.
REQUIRED [illegible] ——— 2,280 Lbs.
PROVIDED [illegible] (MINIMUM) ——— 4 THRU BOLTS.

MUST EDIT FOR ACTUAL UNIT

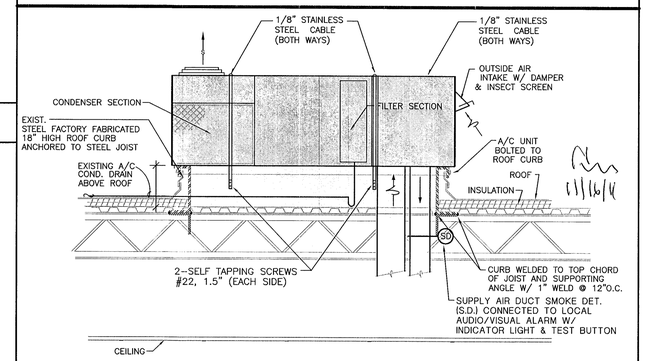

8 M-300 PACKAGE A/C UNIT MOUNTING DETAIL

N.T.S.

MOUNTED ON STEEL JOIST

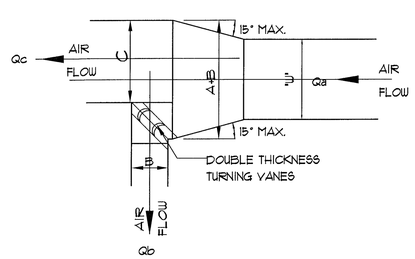

$Qb/Qc \geq 0.4$

LARGE TAKE-OFF

9 M-300 BRANCH TAKE-OFF AND REDUCER

N.T.S.

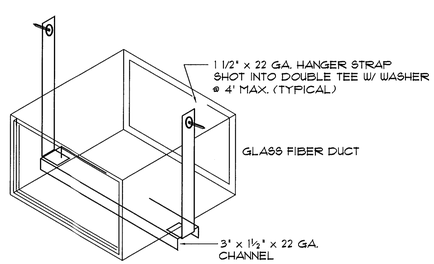

PER SMACNA FIBROUS GLASS DUCT CONSTRUCTION STANDARDS

10 M-300 FIBERGLASS HANGER DETAIL

N.T.S.

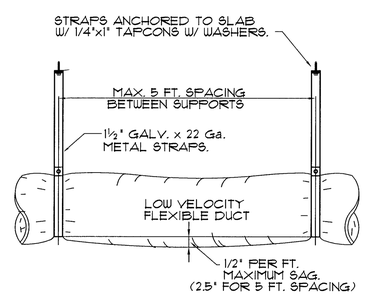

11 M-300 FLEXIBLE DUCT SUPPORT DETAIL

N.T.S.

THESE PLANS ARE FOR BUILDING DEPARTMENT REVIEW. THEY ARE NOT TO BE CONSTRUED AS FINAL CONSTRUCTION DOCUMENTS UNTIL ALL BUILDING DEPARTMENT APPROVALS ARE OBTAINED AND COMMENTS INCORPORATED INTO THESE DWGS. DUE TO THE VARIATIONS IN INTERPRETATIONS OF THE CODE THAT OCCUR IN DIFFERENT MUNICIPALITIES FINAL APPROVAL AND REVIEW IS NEEDED TO ASSURE COMPLIANCE WITH THE APPLICABLE CODES AND STANDARDS.

9-8-11
PERMIT SET

ANTONIO FRANYIE
PE #11640 MECH
WIANA FRANYIE
PE #49985 ME

FRANYIE ENGINEERS INC.
Certificate of Authorization # 00002906
10610 NW 27 Street, Miami FL 33172
TEL: (305) 592-1360 FAX: (305) 594-9279
www.franyieengineers.com

DESIGN	DRAWN	9-8-11
JOB NUMBER	11-210	

REVISIONS / SUBMISSIONS

1151

ALL DRAWINGS AND WRITTEN MATERIAL APPEARING HEREIN CONSTITUTE THE ORIGINAL AND UNPUBLISHED WORK OF KOBI KARP AIA, AND MAY NOT BE DUPLICATED, USED, OR DISCLOSED WITHOUT THE EXPRESS WRITTEN CONSENT OF KOBI KARP ARCHITECTURE & INTERIOR DESIGN, INC. AIA. (c)__2011__

BAMBOO GROUP INC.
550 WASHINGTON AVENUE
MIAMI BEACH, FLORIDA

HVAC DETAILS

Lic. # AR0012578

ARCHITECTURE
INTERIOR DESIGN
PLANNING
AIA ASID NCARB
2915 Biscayne Boulevard
Suite 200
Miami, Florida 33137
O: 305.573.1818
F: 305.573.3766
WWW.KOBIKARP.COM

K • B I K A R P

DRAWN BY:	MD,JO
CHECKED BY:	JG
DATE:	09-08-11

M-300

HVAC NOTES

1.0 GENERAL

1.1 PROVIDE (FURNISH AND INSTALL) ALL NECESSARY MATERIALS AND LABOR FOR A COMPLETELY OPERATIONAL HEATING, VENTILATING AND AIR CONDITIONING (HVAC) SYSTEM AS DEPICTED ON THESE CONTRACT DOCUMENTS.

1.2 INSTALL IN ACCORDANCE WITH THE SOUTH FLORIDA CODE, ASHRAE SMACNA, NFPA AND LOCAL ORDINANCES.

1.3 SCOPE OF WORK :
PROVIDE THE FOLLOWING COMPLETE SYSTEMS :
A. AIR CONDITIONING SUPPLY AND RETURN DUCT SYSTEM.
B. EXHAUST SYSTEM FOR TOILET ROOMS.
C. EXHAUST SYSTEMS FOR WAREHOUSE.
D. AIR CONDITIONING UNITS AND CONTROLS.
E. INDEPENDENT TEST AND BALANCE.

1.4 NOT USED

1.5 PAY FOR ALL FEES, INSPECTIONS AND CONNECTION CHARGES REQUIRED

1.6 VERIFY AT JOB SITE ALL SPACE CONDITIONS AVAILABLE FOR THE INSTALLATION OF MATERIALS AND EQUIPMENT PRIOR THE INSTALLATION OF EQUIPMENT AND FABRICATION OF DUCTS AND PIPING SYSTEMS. COORDINATE SPACE REQUIREMENTS FOR SERVICE AND MAINTENANCE AND COORDINATE INTERFERENCE WITH OTHER TRADES.

1.7 NATURE OF DESIGN DRAWINGS: DESIGN DRAWINGS ARE DIAGRAMMATIC AND DO NOT INTEND TO SHOW EVERY FITTING, ELBOW, TRANSITION, ETC. THAT WILL BE NECESSARY FOR A COMPLETE AND OPERATIONAL SYSTEMS REQUIRED BY THESE SPECIFICATIONS.

1.8 COORDINATION DRAWINGS: PREPARE 1/4" SCALE (MIN.) COORDINATION DRAWINGS SHOWING DUCTWORK, PIPING AND ALL MAJOR SYSTEM COMPONENTS FOR A/E APPROVAL BEFORE PROCEEDING WITH THE INSTALLATION. IMPLEMENT ALL INFORMATION FROM 1.6 ABOVE.

1.9 SUBMIT SHOP DRAWINGS FOR A/E APPROVAL BEFORE PROCEEDING WITH THE THE PURCHASE OR INSTALLATION OF EQUIPMENT AND MATERIALS.
ALL SHOP DRAWINGS MUST BE SUBMITTED IN A SINGLE BOUND AND INDEXED PACKAGE NO LATER THAN 30 DAYS FROM THE ADJUDICATION OF THE PROJECT.

1.10 GUARANTEE ALL WORK FREE OF DEFECTS IN MATERIALS AND WORKMANSHIP FOR A A PERIOD OF ONE YEAR FROM THE DATE OF PROJECT ACCEPTANCE.

2.0 MATERIALS

2.1 DUCTWORK

2.1.1 GENERAL. ALL DUCT SIZES SHOWN ARE CLEAR INSIDE DIMENSIONS.

2.1.2 DUCTWORK MATERIALS:
A: GENERAL OFFICE AREAS:
FIVE POUNDS DENSITY 1.5" THICK GLASS FIBER (R-6) DESIGNED, CONSTRUCTED AND INSTALLED IN ACCORDANCE WITH SMACNA'S FIBROUS GLASS DUCT CONSTRUCTION STANDARDS. DUCT JOINTS SHALL BE SEALED AND TAPED.
B: TOILET ROOM EXHAUST AND FRESH AIR INTAKES:
GALVANIZED SHEET METAL, CONSTRUCTED, AND INSTALLED ACCORDING TO LATEST EDITION OF SMACNA'S. LOW PRESSURE CONSTRUCTION STD. (0.5" W.G.)

2.1.3 PROVIDE DOUBLE THICKNESS TURNING VANES AT ALL SQUARE ELBOWS. WHERE THE ELBOWS ARE RECTANGULAR INSTALL SINGLE THICKNESS VANES.
.1 ALTERNATE A: PROVIDE 3-PIECE ELBOWS IN LIEU OF TURNING VANES FOR GLASS FIBER DUCTS ONLY.
.2 ALTERNATE A: PROVIDE FULL RADIOS ELBOWS IN LIEU OF TURNING VANES.

2.1.4 PROVIDE VOLUME EXTRACTORS BEHIND EACH SUPPLY OUTLET AND AT EACH DUCT BRANCH.

D: CORRIDORS SUPPLY AIR RISER & **ALL VERTICAL RISERS**

1. DUCT IN SHAFT:
CONSTRUCT OF GALVANIZED SHEET METAL IN ACCORDANCE WITH SMACNA PRESSURE RATING OF 3" W.G. INSULATE WITH 1½" GLASSFIBER THERMAL BLANKET WITH APPROVED FRJ REINFORCE ALUMINUM JACKED. SEAL AIR TIGHT ALL JOINT WITH APPROVED HIGH VELOCITY MASTIC.

2. EXTERIOR DUCT:
CONSTRUCT OF GALVANIZED SHEET METAL IN ACCORDANCE WITH SMACNA PRESSURE RATING OF 3" W.G., INSULATE WITH 2" GLASSFIBER (MIN. R-8) THERMAL AND ACOUSTICAL LINING WITH ANTI-BACTERIAL COATING. CONSTRUCT ALL JOINTS WEATHERPROOF (AIR AND WATER TIGHT) WITH HIGH PRESSURE LONG-LIFE MASTIC APPROVED FOR EXTERIOR USE.

3. MAIN SUPPLY AIR DUCTS IN VAV SYSTEMS

3.1 UPSTREAM OF VAV BOXES:
CONSTRUCT OF GALVANIZED SHEET METAL IN ACCORDANCE WITH SMACNA PRESSURE RATING OF 3" W.G. INSULATE WITH 1½" GLASSFIBER THERMAL BLANKET WITH APPROVED FRJ REINFORCE ALUMINUM JACKED. SEAL AIR TIGHT ALL JOINT WITH APPROVED HIGH VELOCITY MASTIC.

3.2 DOWNSTREAM OF VAV BOXES:
FIVE POUND DENSITY 1.5" THICK GLASS FIBER (R-6) DESIGNED, CONSTRUCTED AND INSTALLED IN ACCORDANCE WITH SMACNA'S LOW PRESSURE DUCT MANUAL. ALL DUCT JOINTS SHALL BE SEALED AND TAPED.

2.2 NOT USED.

2.3 NOT USED.

2.4 AIR DISTRIBUTION PRODUCTS :
2.4.1 PROVIDE EXTRUDED ALL ALUMINUM AIR DISTRIBUTION PRODUCTS.
2.4.2 PROVIDE SUPPLY AND RETURN GRILLES AND DIFFUSERS AS INDICATED ON THE DRAWINGS AND SCHEDULES.
2.4.3 PROVIDE FINISHES AND TYPES OF MOUNT IN COORDINATION WITH THE CEILING TYPES AS SHOWN ON ARCHITECTURAL DRAWINGS.
2.4.4 PROVIDE OPPOSED BLADE, KEY OPERATED DAMPERS BEHIND ALL AIR SUPPLY OUTLETS.

2.5 PROVIDE A MINIMUM 5 YEAR WARRANTY FOR ALL AIR CONDITIONING COMPRESSORS STARTING FROM THE DATE OF PROJECT ACCEPTANCE.

2.6 CONTROLS:
2.6.1 GENERAL: PROVIDE THE NECESSARY AUTOMATIC CONTROLS FOR PROPER OPERATION OF ALL EQUIPMENT SPECIFIED HEREIN. FURNISH MAGNETIC STARTERS AND INTERLOCK WIRING INDICATED FOR EACH PIECE OF EQUIPMENT.
2.6.2 OFFICE AREA DX EQUIPMENT:
PROVIDE AIR CONDITIONING UNITS WITH MATCHING LOW VOLTAGE HEAT/COOL THERMOSTATS WITH ON-OFF AUTO SUB-BASE SWITCH AS FURNISHED BY THE EQUIPMENT MANUFACTURER.

2.7 STARTERS:
PROVIDE MAGNETIC STARTER FOR ALL MECHANICAL EQUIPMENT IN THIS SECTION AS DESCRIBED ON THE EQUIPMENT SCHEDULES. ALL STARTERS MUST HAVE HAND-OFF-AUTO POSITION SWITCH ON THE COVER AND RED/GREEN PILOT LIGHTS. PROVIDE THE NECESSARY AUXILIARY OPEN AND CLOSED CONTACTS FOR THE INTENDED OPERATION AND INTERLOCKS.

2.8 NOT USED.

2.9 IDENTIFICATION:
2.9.1 LABEL ALL EQUIPMENT WITH ENGRAVED BLACK PLASTIC PLAQUES 12"x4" HIGH WITH WITH 1.5" LETTERS. USE THE SAME NOMENCLATURE AS IN THESE DOCUMENTS.

3.0 EXECUTION

3.1 INSTALL ALL EQUIPMENT AND MATERIALS IN STRICT ACCORDANCE WITH THE MANUFACTURER'S MANUALS AND RECOMMENDATIONS, PAYING SPECIAL ATTENTION TO REQUIRED CLEARANCES FOR INSTALLATION, OPERATION & SERVICE. FOR INSTALLATION, OPERATION AND SERVICE.

3.2 THERMOSTAT LOCATION.
THERMOSTAT LOCATION IS CRITICAL TO PROPER EQUIPMENT OPERATION. INSTALL THERMOSTAT AT LOCATIONS SHOWN ON PLANS.
RELOCATE ONLY WHEN APPROVED BY THE A/E IN WRITING.

3.3 WHERE R/A IS PROPOSED BY WAY OF DOOR UNDERCUTS, PROVIDE A MINIMUM 1" CLEAR SPACE BETWEEN THE BOTTOM OF THE DOOR AND THE FLOOR FINISH CARPET OR TILE.

3.4 EQUIPMENT MUST OPERATE FREE OF OBJECTIONABLE NOISE AND VIBRATION REPAIR AND/OR REPLACE ALL SOURCES OF NOISE AND VIBRATION FOUND TO BE OBJECTIONABLE, TO THE SATISFACTION OF THE A/E.

3.5 BALANCE ALL SYSTEMS TO PROVIDE AIR AND WATER QUANTITIES AND CAPACITIES TO MATCH SPECIFIED FLOWS & CAPACITIES.
CALIBRATE FLOWS TO NEW EQUIPMENT PER MANUFACTURER'S REQUIREMENTS.
SUBMIT FINAL TEST AND BALANCE REPORT TO A/E FOR ACCEPTANCE.

3.6 STRICTLY FOLLOW ALL MANUFACTURER'S INSTALLATION MANUALS AND INSTRUCTIONS IN THE INSTALLATION OF ALL EQUIPMENT.
OBTAIN, FROM EACH MANUFACTURER, PROPER CERTIFICATION FOR THE ADEQUACY OF THE INSTALLATION OF ALL PIECES OF EQUIPMENT BEFORE PLACING SYSTEM IN OPERATION.

3.7 PROVIDE MAINTENANCE AND OPERATION MANUAL

3.8 PROVIDE AS-BUILT REPRODUCIBLE DRAWINGS.

3.9 PROVIDE INSTRUCTION TO OWNER'S DESIGNATED PERSONNEL.

NOTES:

1. INSULATE ROOF SLAB WITH R-19 MINIMUM INSULATION VALUE FOR ALL R/A CEILING PLENUM AREAS.

NFPA 90A (SECTION 4-4)

1. DUCT SMOKE DETECTOR SHALL BE INSTALLED DOWNSTREAM OF THE FILTERS AND AHEAD OF ANY BRANCH CONNECTION IN AIR SUPPLY SYSTEM HAVING A CAPACITY GREATER THAT 2000 CFM
2. AT EACH STORY PRIOR TO THE CONNECTION TO COMMON RETURN AND PRIOR TO ANY RECIRCULATION OR FRESH AIR INLET CONNECTION IN AIR RETURN SYSTEM HAVING CAPACITY GREATER THAT 15,000 CFM AND SERVING MORE THAT ONE STORY

THESE PLANS ARE FOR BUILDING DEPARTMENT REVIEW. THEY ARE NOT TO BE CONSTRUED AS FINAL CONSTRUCTION DOCUMENTS UNTIL ALL BUILDING DEPARTMENT APPROVALS ARE OBTAINED AND COMMENTS INCORPORATED INTO THESE DWGS. DUE TO THE VARIATIONS IN INTERPRETATIONS OF THE CODE THAT OCCUR IN DIFFERENT MUNICIPALITIES FINAL APPROVAL AND REVIEW IS NEEDED TO ASSURE COMPLIANCE WITH THE APPLICABLE CODES AND STANDARDS.

	EXISTING	NEW	NEW	NEW	EXISTING
DESIGNATION	2 TON (EXIST.)	AC-1 & AC-2	AC-3	AC-4	15 TON
AREA SERVED	Z-8	Z-5 & Z-6	Z-2, Z-3 & Z-9	Z-7 & Z-7A	Z-3 & 4
MANUFACTURER	CARRIER	CARRIER	CARRIER	CARRIER	CARRIER
FAN COIL MODEL No.	FA4CNC024	FA4CNC060	40RMH016-B6	40RMH012-B6	40RMH016-B6
CONDENSING UNIT MODEL No.	24ABR240	24ABR360	38AKDC016-5	38ARDC012-5	38AKDC016-5
	2 TON	5 TON	15 TON	10 TON	15 TON
COMBINED RATINGS					
TOTAL SENSIBLE CAPACITY MBTUH	18,000	43,700	139,000	96,100	139,000
GRAND TOTAL CAPACITY MBTUH	24,000	56,400	188,000	124,000	188,000
TOTAL HEATING CAPACITY MBTUH		34,000	68,000	34,000	68,000
ENERGY EFFICIENCY RATIO EER		13.0	9.8	10.5	9.8
COEFFICIENT OF PERFORMANCE COP		-	-	-	-
AIR HANDLING UNIT					
TYPE	VERTICAL	VERTICAL	VERTICAL	VERTICAL	VERTICAL
TOTAL AIR SUPPLY CFM	800	2,000	6,000	4,000	6,000
OUTSIDE AIR SUPPLY, CFM	40	300 & 400	2400 (1)	1,800	2400 (1)
ENTERING AIR CONDITIONS FDB/FWB	EXISTING	80 / 67	80 / 67	80 / 67	80 / 67
EXTERNAL STATIC PRESSURE "H_2O		0.50	1.0	0.75	1.0
FAN SPEED RPM		-	-	-	-
FAN MOTOR HP		¾	3.7	2.4	3.7
ELECTRICAL SERVICE AVAILABLE		208-3-60	208-3-60	208-3-60	208-3-60
RUNNING LOAD AMPS		-	10.2	5.2	10.2
ELECTRIC RESISTANCE HEATER SIZE KW		10.0	20	10	20
UNIT WEIGHT		161	685	425	685
CONDENSING UNIT					
TYPE	AIR COOLED	AIR COOLED	AIR COOLED	AIR COOLED	AIR COOLED
LOCATION	SEE PLANS	SEE PLANS	SEE PLANS	SEE PLANS	SEE PLANS
AMBIENT AIR TEMPERATURE FDB	EXISTING	95	95	95	95
ELECTRICAL SERVICE AVAILABLE		208-3-60	208-3-60	208-3-60	208-3-60
RUNNING LOAD AMPS		11.3	63.6	16.5 EACH	63.6
MINIMUM CIRCUIT AMPS		22.8	87.5	39	87.5
MAXIMUM FUSE SIZE AMPS		35	125	50	125
UNIT WEIGHT		239	713	488	713
ACCESSORIES					
REFRIGERANT TYPE	R-22	R-22	R-22	R-22	R-22
REFRIGERANT PIPING LENGHT FT.	EXISTING	SEE PLAN	SEE PLAN	SEE PLAN	SEE PLAN
LIQUID LINE TYPE O.D.		(3)	(3)	(3)	(3)
SUCTION LINE SIZE O.D.		(3)	(3)	(3)	(3)
THERMOSTAT		COOL-HEAT	COOL-HEAT	COOL-HEAT	COOL-HEAT
FILTER TYPE		2" PLEATED MERV 8	4" PLEATED MERV 8	4" PLEATED MERV 8	4" PLEATED MERV 8
VIBRATION ISOLATORS					
FOR AIR HANDLING UNIT	EXISTING	1½" DEFL. SPRINGS	1½" DEFL. SPRINGS	1½" DEFL. SPRINGS	1½" DEFL. SPRINGS
FOR CONDENSING UNIT	EXISTING	RUBBER IN SHEAR	RUBBER IN SHEAR	RUBBER IN SHEAR	RUBBER IN SHEAR
AUTOMATIC CONTROLS					
TYPE	EXISTING	ELECTRONIC	ELECTRONIC	ELECTRONIC	ELECTRONIC
DESCRIPTION	EXISTING	HEAT-COOL-HUMIDITY	HEAT-COOL-HUMIDITY	HEAT-COOL-HUMIDITY	HEAT-COOL-HUMIDITY
DUCT SMOKE DECTOR (IN SUPPLY DUCT)	N/R	YES	YES	YES	YES

COMMENTS:
(*) MANUFACTURER RECOMMENDATIONS
(1) BALANCE OF REQUIRED OA (4,000 CFM) FROM ZONE 1 - RTU-2 & EXIST. RTUx-1 THRU 5

NOTES:
1) PROVIDE SINGLE POINT ELECTRICAL CONNECTION W/ FACTORY PRE-WIRED ELECTRICAL HEATER.
2) PROVIDE AIR HANDLING UNIT W/ FACTORY INSTALLED CIRCUIT BREAKER.
3) INSTALL REFRIGERANT PIPING SIZE AND ACCESSORIES PER FACTORY SPECIFICATIONS FOR DESIGN SUCTION
PROVIDE SUBMITTALS WITH REFRIGERANT LINE PIPING DIAGRAMS, SIZED BY BY EQUIPMENT MNFGR, AND INSTALLATION MANUAL.

OUTSIDE AIR CALCULATIONS ASHRAE Std. 62.1 - 2007)

ZONE-1 EXIST. RTUx-1, 2, 3, 4 & 5 PLUS NEW RTU-2

BAR LOUER SEATING			REMARKS
AREA = 3,600 SF			INSTALL MODULATING DAMPER IN O/A INTAKE CONECTED TO CO2 DETECTOR
400 PERSONS * 20 CFM/PER.	8,000 CFM O/A		
O/A PROVIDED =	8,000 CFM O/A		

ZONE-2 NEW AC-3

BAR			REMARKS
AREA = 1,550 SF			INSTALL MODULATING DAMPER IN O/A INTAKE CONECTED TO CO2 DETECTOR
50 PERSONS * 20 CFM/PER.	1,000 CFM O/A		
O/A PROVIDED =	1,000 CFM O/A		

ZONE-3 NEW AC-3

LOBBY			REMARKS
AREA = 2,150 SF			INSTALL MODULATING DAMPER IN O/A INTAKE CONECTED TO CO2 DETECTOR
50 PERSONS * 20 CFM/PER.	1,000 CFM O/A		
O/A PROVIDED =	1,000 CFM O/A		

ZONE-4 NEW RTU-1

ENTRANCE			REMARKS
AREA = 1,610 SF			INSTALL MODULATING DAMPER IN O/A INTAKE CONECTED TO CO2 DETECTOR
50 PERSONS * 20 CFM/PER.	1,000 CFM O/A		
O/A PROVIDED =	1,000 CFM O/A		

ZONE-5 NEW AC-2

BACK OF THE HOUSE			REMARKS
AREA = 3,600 SF			INSTALL MODULATING DAMPER IN O/A INTAKE CONECTED TO CO2 DETECTOR
14 PERSONS * 20 CFM/PER.	280 CFM O/A		
O/A PROVIDED =	280 CFM O/A		

ZONE-6 NEW AC-3

OFFICES 1, 2 & 4			REMARKS
AREA = 1,190 SF			INSTALL MODULATING DAMPER IN O/A INTAKE CONECTED TO CO2 DETECTOR
10 PERSONS * 20 CFM/PER.	200 CFM O/A		
O/A PROVIDED =	200 CFM O/A		

ZONE-7 NEW AC-4

VIP AREA			REMARKS
AREA = 1,904 SF			INSTALL MODULATING DAMPER IN O/A INTAKE CONECTED TO CO2 DETECTOR
30 PERSONS * 20 CFM/PER.	600 CFM O/A		
O/A PROVIDED =	600 CFM O/A		

ZONE-7A NEW AC-4

VIP AREA			REMARKS
AREA = 810 SF			INSTALL MODULATING DAMPER IN O/A INTAKE CONECTED TO CO2 DETECTOR
30 PERSONS * 20 CFM/PER.	600 CFM O/A		
O/A PROVIDED =	600 CFM O/A		

ZONE-8 EXIST. 2 TON SPLIT

STORAGE			REMARKS
AREA = 500 SF * 0.05 CFM/SF.	25 CFM O/A		INSTALL MODULATING DAMPER IN O/A INTAKE CONECTED TO CO2 DETECTOR
2 PERSONS * 20 CFM/PER.	40 CFM O/A		
O/A PROVIDED =	40 CFM O/A		

ZONE-9 NEW AC-3

STORAGE			REMARKS
AREA = 367 SF * 0.05 CFM/SF.	18 CFM O/A		INSTALL MODULATING DAMPER IN O/A INTAKE CONECTED TO CO2 DETECTOR
1 PERSONS * 20 CFM/PER.	20 CFM O/A		
O/A PROVIDED =	20 CFM O/A		

VENTILATION EQUIPMENT SCHEDULE

DESIGNATION	EF-1	EF-2	EF-3	EF-4
QUANTITY (VERIFY)	SEE PLAN	SEE PLAN	SEE PLAN	SEE PLAN
USE	EXHAUST	EXHAUST	EXHAUST	EXHAUST
LOCATION	CLG.	INLINE	CLG.	CLG.
AREA SERVED	RESTROOM	ELECT. RM	RESTROOM	RESTROOM
MANUFACTURER	GREENHECK	GREENHECK	GREENHECK	GREENHECK
MODEL NO.	SP-B50	CSP-A200	SPA-390	SPA-250
FAN				
TYPE	CENTRIFUGE	CENTRIFUGE	CENTRIFUGE	CENTRIFUGE
AIR FLOW (C.F.M.)	50	200	300	200
EXTERNAL STATIC PRESSURE (" H_2O)	0.125	0.25	0.125	0.125
FAN SPEED (R.P.M.)	675	900	1000	1000
FAN SOUND RATINGS, SONES	1.9	0.9	4.5	2.5
MOTOR				
TYPE	-	-	-	-
HORSEPOWER	38 WATTS	48.2 WATTS	135 WATTS	81 WATTS
FULL LOAD AMPS.	-	0.43	-	-
ELECTRICAL SERVICE AVAILABLE	115/1/60	115/1/60	115/1/60	115/1/60
STARTER TYPE	LITE SWITCH	LITE SWITCH	LITE SWITCH	LITE SWITCH
STARTER FURNISHED BY	ELECT. CONT.	(3) ELECT. CONT	ELECT. CONT.	ELECT. CONT.
GENERAL DATA				
LOCATION	CLG.	INLINE	CLG.	CLG.
MASONRY OPENING REQUIRED, SEE NOTE 1	SEE PLAN	SEE PLAN	-	-
OPERATING WEIGHT	9	15	12	10
ACCESSORIES				
FACTORY ROOF CURB (SEE NOTE 2)	N/A	N/A	N/A	N/A
SERVICE SWITCH	YES	YES	YES	YES
BACKDRAFT DAMPER	YES	YES	YES	YES
WALL BOX	N/A	N/A	N/A	N/A
WALL COLLAR	N/A	N/A	N/A	N/A
OSHA MOTOR SIDE GUARD	N/A	N/A	N/A	N/A
BIRD SCREEN	YES	YES	YES	YES
WEATHER HOOD	N/A	N/A	N/A	N/A
DAMPER GUARD	N/A	N/A	N/A	N/A
REAR GUARD	N/A	N/A	N/A	N/A
ROOF-JACK	YES	YES	WALL CAP	WALL CAP
ROOF-CAP	N/A	N/A	N/A	N/A
VIBRATION ISOLATORS				
TYPE	N/A	N/A	N/A	N/A
MINIMUM STATIC DEFLECTION (INCH.)	N/A	N/A	N/A	N/A
AUTOMATIC CONTROLS				
TYPE	N/A	N/A	N/A	N/A
DESCRIPTION	N/A	N/A	N/A	N/A

1.- ROOF AND/ OR MASONRY OPENING SHOWN ARE FOR REFERENCE ONLY PROVIDE ROOF OPENINGS PER APPROVED EQUIPMENT SHOP DRAWINGS.
2.- PROVIDE FAN AND CURB FACTORY HIGH WIND RESISTENCE (150 MPH - 61 PSF) CERTIFICATION
3.- INTERCONNECTED WITH THERMOSTAT

ROOF TOP PACKAGE UNIT SCHEDULE

DESIGNATION	NEW RTU -1	NEW RTU -2	EXISTING RTUx-1, 2, 3, 4 & 5
QUANTITY (FIELD VERIFY)	NOT USED	1	5
USE		COOL-HEAT	COOL-HEAT
LOCATION		ROOF	ROOF
AREA SERVED		ZONE 4	ZONE 1
MANUFACTURER		CARRIER	CARRIER
MODEL No.		50TCD14-5	50TFF014
RATINGS			
NOMINAL SIZE, TONS		12.5	12½
GRAND TOTAL CAPACITY, MBH @80/67		148.7	150,000
TOTAL SENSIBLE CAPACITY, MBH @ 80/67		105.4	105,000
TOTAL HEATING CAPACITY, MBTUH.		40.8	40,800
ENERGY EFFICIENCY RATIO EER		11.0	--
COEFFICIENT OF PERFORMANCE COP		N/A	N/A
ELECTRICAL SERVICE AVAILABLE		208/3/60	208/3/60
MINIMUM CIRCUIT, AMPS		63.2	65.2
MAXIMUM FUSE SIZE, AMPS		80.0	80
UNIT WEIGHT, LBS		1200	--
EVAPORATOR SECTION			
SUPPLY AIR CFM (NOM.)		5,000	5,000
OUTSIDE AIR CFM		SEE SCHEDULE	SEE SCHEDULE
EXTERNAL STATIC PRESSURE		0.70	0.8
FAN SPEED, RPM		-	-
FAN MOTOR, HP		5.0	-
FAN MOTOR, RLA		2.4	-
CONDENSING SECTION			
TYPE		AIR COOLED	AIR COOLED
REFRIGERANT TYPE		R-410A	R-410A
AMBIENT AIR TEMPERATURE, °Fdb		95	95
COMPRESSOR, QTY/ TYPE		2/ SCROLL	-
COMPRESSOR, RLA (#1- #2)		19.0-22.4	-
CONDENSER FAN, (QTY) HP/RLA		(2) 1/4 EA.	-
CAPACITY REDUCTION STEPS		100-50.0	--
HEATING SECTION			
TYPE		ELECTRICAL	ELECTRICAL
HEATING ELEMENT SIZE, KW		12.0	-
TOTAL HEATING CAPACITY BTU/HR		40,800	-
ELECT - BASED ON HTR-MCA		63.2	-
ELECT - BASED ON HTR-MOCP		80.0	-
ACCESSORIES			
FACTORY FABRICATED ROOF CURB		YES	YES
SMOKE DETECTOR (PROVIDE W/ LOCAL AUDIO VISUAL)		YES	YES
PROGRAM.T'STAT W/DIRTY FILTER INDICATOR		YES	YES
ECONOMIZER		YES	YES
MOTORIZED DAMPEWR IN O/A INTAKE		YES	YES
BACK-DRAFT DAMPER IN O/A INTAKE		N/A	N/A

(*) INSTALL MODULATING OA CONTROL DAMPERS TO ALL NEW AND EXISTING ROOF TOP UNITS. PROVIDE A CO2 CONTROL SYSTEM TO OPERATE AS DEMAND CONTROLLED VENTILATION PER ASHRAE 62-2004

VENTILATION EQUIPMENT SCHEDULE

DESIGNATION	EF-1	EF-2	EF-3	EF-4
QUANTITY (VERIFY)	SEE PLAN	SEE PLAN	SEE PLAN	SEE PLAN
USE	EXHAUST	EXHAUST	EXHAUST	EXHAUST
LOCATION	CLG.	INLINE	CLG.	CLG.
AREA SERVED	RESTROOM	ELECT. RM	RESTROOM	RESTROOM
MANUFACTURER	GREENHECK	GREENHECK	GREENHECK	GREENHECK
MODEL NO.	SP-B50	CSP-A200	SPA-390	SPA-250
FAN				
TYPE	CENTRIFUGE	CENTRIFUGE	CENTRIFUGE	CENTRIFUGE
AIR FLOW (C.F.M.)	50	200	300	200
EXTERNAL STATIC PRESSURE (" H_2O)	0.125	0.25	0.125	0.125
FAN SPEED (R.P.M.)	675	900	1000	1000
FAN SOUND RATINGS, SONES	1.9	0.9	4.5	2.5
MOTOR				
TYPE	-	-	-	-
HORSEPOWER	38 WATTS	48.2 WATTS	135 WATTS	81 WATTS
FULL LOAD AMPS.	-	0.43	-	-
ELECTRICAL SERVICE AVAILABLE	115/1/60	115/1/60	115/1/60	115/1/60
STARTER TYPE	LITE SWITCH	LITE SWITCH	LITE SWITCH	LITE SWITCH
STARTER FURNISHED BY	ELECT. CONT.	(3) ELECT. CONT	ELECT. CONT.	ELECT. CONT.
GENERAL DATA				
LOCATION	CLG.	INLINE	CLG.	CLG.
MASONRY OPENING REQUIRED, SEE NOTE 1	SEE PLAN	SEE PLAN	-	-
OPERATING WEIGHT	9	15	12	10
ACCESSORIES				
FACTORY ROOF CURB (SEE NOTE 2)	N/A	N/A	N/A	N/A
SERVICE SWITCH	YES	YES	YES	YES
BACKDRAFT DAMPER	YES	YES	YES	YES
WALL BOX	N/A	N/A	N/A	N/A
WALL COLLAR	N/A	N/A	N/A	N/A
OSHA MOTOR SIDE GUARD	N/A	N/A	N/A	N/A
BIRD SCREEN	YES	YES	YES	YES
WEATHER HOOD	N/A	N/A	N/A	N/A
DAMPER GUARD	N/A	N/A	N/A	N/A
REAR GUARD	N/A	N/A	N/A	N/A
ROOF-JACK	YES	YES	WALL CAP	WALL CAP
ROOF-CAP	N/A	N/A	N/A	N/A
VIBRATION ISOLATORS				
TYPE	N/A	N/A	N/A	N/A
MINIMUM STATIC DEFLECTION (INCH.)	N/A	N/A	N/A	N/A
AUTOMATIC CONTROLS				
TYPE	N/A	N/A	N/A	N/A
DESCRIPTION	N/A	N/A	N/A	N/A

1.- ROOF AND/ OR MASONRY OPENING SHOWN ARE FOR REFERENCE ONLY PROVIDE ROOF OPENINGS PER APPROVED EQUIPMENT SHOP DRAWINGS.
2.- PROVIDE FAN AND CURB FACTORY HIGH WIND RESISTENCE (150 MPH - 61 PSF) CERTIFICATION
3.- INTERCONNECTED WITH THERMOSTAT

AIR DISTRIBUTION SCHEDULE

DESIGNATION	A	A	A	B	A
USE	SUPPLY	SUPPLY	SUPPLY	RETURN	O/A INTAKE
CONSTRUCTION	ALUMINUM	ALUMINUM	ALUMINUM	ALUMINUM	ALUMINUM
CAPACITY (C.F.M.)	SHOWN ON PLANS	SHOWN ON PLANS	SHOWN ON PLANS	SHOWN ON PLANS	SHOWN ON PLANS
SIZE	DUCT + NECK SIZE	AS SHOWN ON PLAN	AS SHOWN ON PLAN	AS SHOWN ON PLAN	AS SHOWN ON PLAN
TYPE	CEILING	CEILING	ROUND DIFF.	24" x 24" MODULAR	STORM PROOF
COMMENTS :	FIXED BLADE 24" x 24" MODULAR	FIXED BLADE	ADJUSTABLE ROUND DIFF.		
FINISH	WHITE	WHITE	WHITE	BRUSHED ALMINUM	BRUSHED ALMINUM
MOUNTING TYPE	T - BAR	T - BAR	DUCT	T - BAR	LINEAR
NOISE CRITERIA	30 MAX	30 MAX	30 MAX	30 MAX	30 MAX
MANUFACTURER	METALAIRE	METALAIRE	METALAIRE	METALAIRE	GREENHECK
MODEL	SERIES 5000-6	SERIES 5000-1	SERIES 3000	RH OR 1000 R	EHH-600
ACCESSORIES					
OPPOSED BLADE REGIST.	OBD	OBD	OBD	-	-
FIRE DAMPER	-	-	-	-	-
NECK SIZE	DUCT + NECK SIZE	SHOWN ON PLANS	SHOWN ON PLANS	SHOWN ON PLANS	SHOWN ON PLANS
OTHER	-	-	-	-	55 BIRD SCREEN

NOTES :
1. FINISHES AND TYPES OF MOUNTS SHALL BE COORDINATED WITH ARCHITECTURAL DRAWINGS.
2. PROVIDE SINGLE THICKNESS TURNING VANES AT ALL 90 RECTANGULAR ELBOWS AND DOUBLE THICKNESS TURNING VANES AT ALL 90° SQUARE ELBOWS, OR 3 PIECE ELBOWS. *
3. PROVIDE VOLUME EXTRACTORS BEHIND EACH SUPPLY OUTLET AND AT EACH DUCT BRANCH SUPPLY OUTLETS MODEL - OBDC.
DUCT BRANCH TAKE-OFF MODEL - ARTROL MOD. 102
4. PROVIDE O.B. DAMPER AT ALL SUPPLY OUTLETS.
5. AIR PATTERN AND DIFFUSOR FACE SHOWN ON PLANS.
6. DIFFUSER NECK SIZE SHOWN ON PLANS. (6x6, 9x9, 12x12, OR 15x15)

HVAC PLAN NOTES

1.- COORDINATE ALL FINAL THERMOSTAT LOCATIONS WITH ARCHITECT/ENGINEERS.
2.- CONSULT A/E ON ANY CHANGES TO THERMOSTAT LOCATIONS AS SHOWN ON THESE PLANS.
3.- RETURN AIR FLOW THROUGH DOOR UNDERCUTS SHALL BE PROVIDED THROUGH A 1" MIN. NET OPENING AFTER FLOOR FINISHES ARE INSTALLED. (NO EXCEPTIONS)
4.- RETURN AIR FLOW THROUGH DOOR LOUVER SHALL BE PROVIDED WHERE APPLICABLE
5.- COORDINATE EXH. FAN AND A/C UNITS ROOF OPENINGS W/ STRUCTURAL DWGS. AND MANUF. SPECIF. & RECOMENDATIONS.
6.- ALL SANITARY AND EXH. VENT SHALL BE 10' MIN. AW

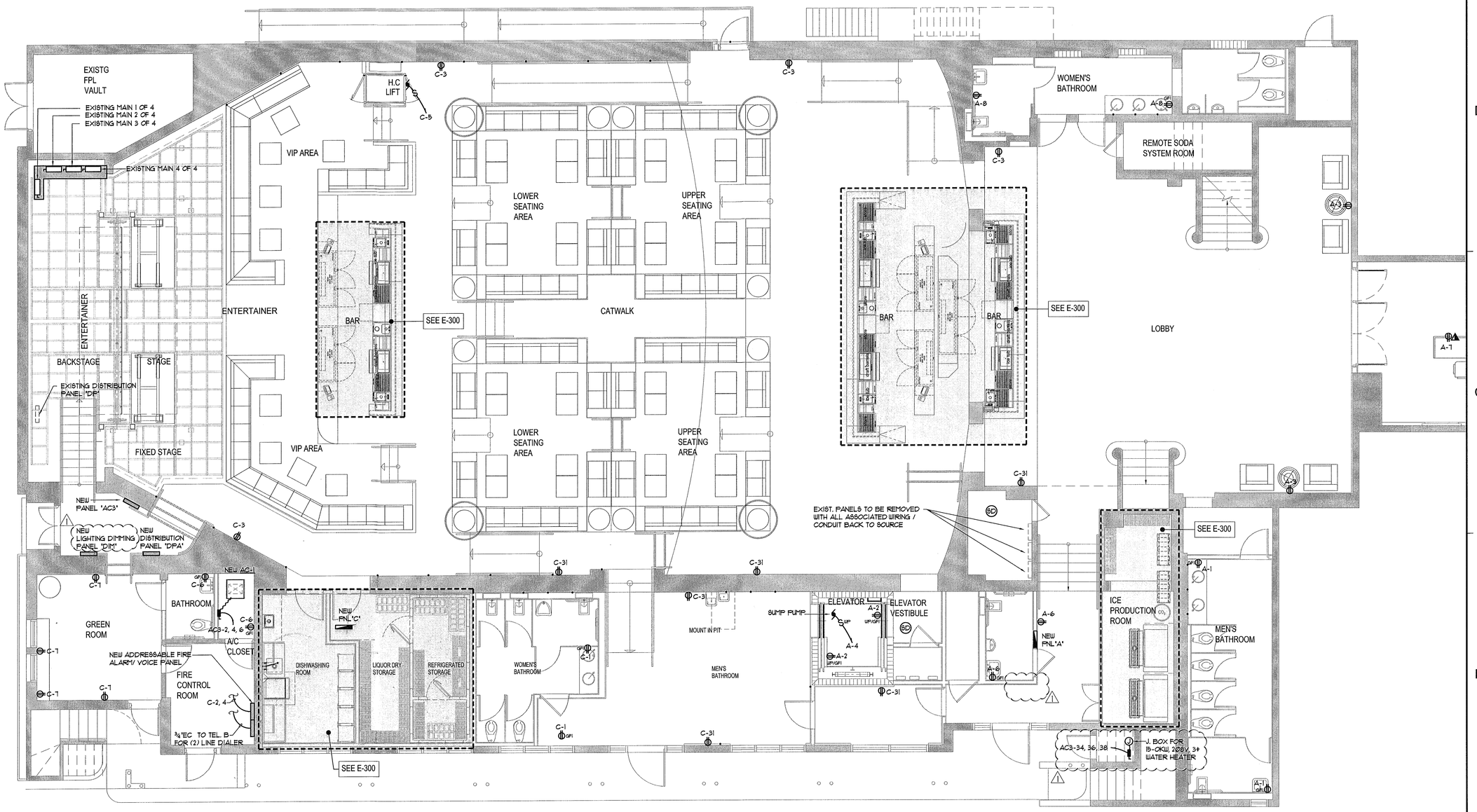

GROUND FLOOR POWER PLAN

SCALE: 3/16"=1'-0"

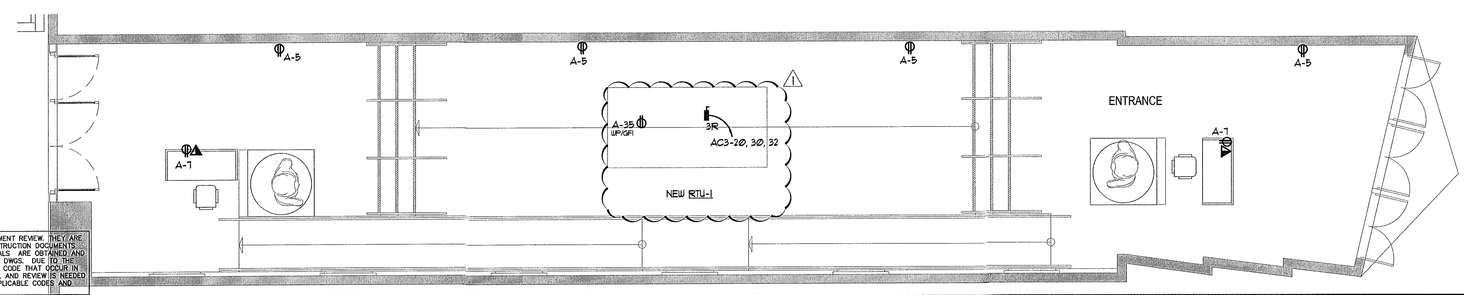

THESE PLANS ARE FOR BUILDING DEPARTMENT REVIEW. THEY ARE NOT TO BE CONSTRUED AS FINAL CONSTRUCTION DOCUMENTS UNTIL ALL BUILDING DEPARTMENT APPROVALS ARE OBTAINED AND COMMENTS INCORPORATED INTO THESE DWGS. DUE TO THE VARIATIONS IN INTERPRETATIONS OF THE CODE THAT OCCUR IN DIFFERENT MUNICIPALITIES FINAL APPROVAL AND REVIEW IS NEEDED TO ASSURE COMPLIANCE WITH THE APPLICABLE CODES AND STANDARDS.

Electrical Plans Examiner

VIVIANA FRANYIE LICENSE No. 49985 STATE OF FLORIDA PROFESSIONAL ENGINEER Nov. 3, 2011

FRANYIE ENGINEERS INC.
ANTONIO FRANYIE PE #11940 MECH
VIVIANA FRANYIE PE #49985 ME
Certificate of Authorization # 00002906
10610 NW 27 Street, Miami FL 33172
TEL: (305) 592-1380 FAX: (305) 594-9279
www.franyieengineers.com
DESIGN: | DRAWN: | 9-8-11
JOB NUMBER 11-210

FB PRINTED: Nov. 3, 2011

9-8-11
PERMIT SET

REVISIONS / SUBMISSIONS
1 11-2-11 COORDINATION AAF

1151

ALL DRAWINGS AND WRITTEN MATERIAL APPEARING HEREIN CONSTITUTE THE ORIGINAL AND UNPUBLISHED WORK OF KOBI KARP AIA, AND MAY NOT BE DUPLICATED, USED, OR DISCLOSED WITHOUT THE EXPRESS WRITTEN CONSENT OF KOBI KARP ARCHITECTURE & INTERIOR DESIGN, INC. AIA. (c) 2011

BAMBOO GROUP INC.
550 WASHINGTON AVENUE
MIAMI BEACH, FLORIDA

GROUND FLOOR PLAN

Lic. # AR0012578

ARCHITECTURE
INTERIOR DESIGN
PLANNING
AIA ASID NCARB
2915 Biscayne Boulevard
Suite 200
Miami, Florida 33137
O: 305.573.1818
F: 305.573.3766
WWW.KOBIKARP.COM
K • B I KARP

DRAWN BY:	MD,JO
CHECKED BY:	JG
DATE:	09-08-11

E-100

P:\PROJECTS\2011\KOBI KARP\11-210 Paris Theater\Paris_E100-101-102-103-NEW.dwg, E-100, 11/3/2011 4:25:03 PM, tiny, 1:1

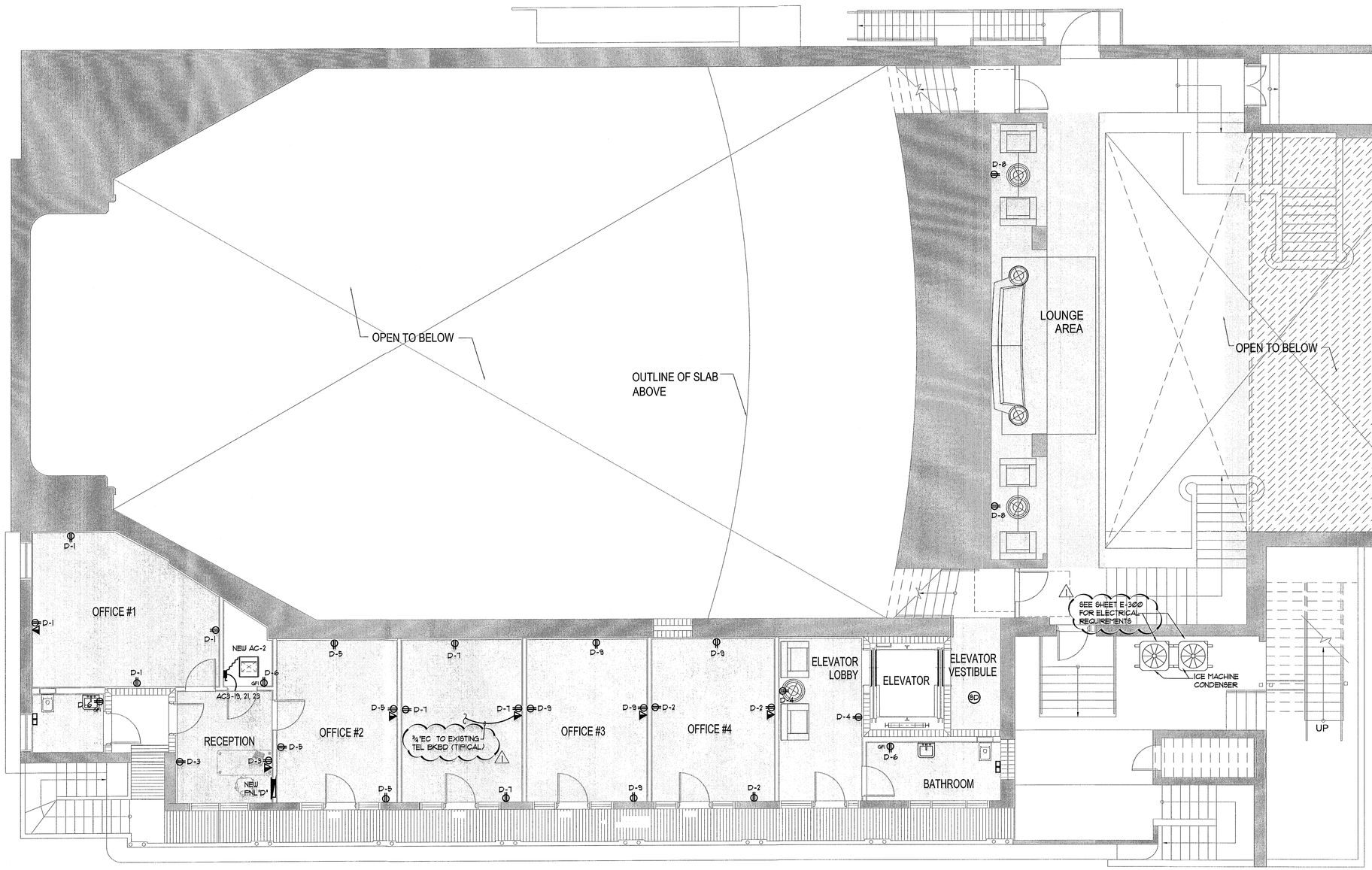

SECOND FLOOR POWER PLAN

SCALE: 3/16"=1'-0"

THESE PLANS ARE FOR BUILDING DEPARTMENT REVIEW. THEY ARE NOT TO BE CONSTRUED AS FINAL CONSTRUCTION DOCUMENTS UNTIL ALL BUILDING DEPARTMENT APPROVALS ARE OBTAINED AND COMMENTS INCORPORATED INTO THESE DWGS. DUE TO THE VARIATIONS IN INTERPRETATIONS OF THE CODE THAT OCCUR IN DIFFERENT MUNICIPALITIES FINAL APPROVAL AND REVIEW IS NEEDED TO ASSURE COMPLIANCE WITH THE APPLICABLE CODES AND STANDARDS.

Electrical Plans Examiner

VIVIANA FRANYIE LICENSE NO. 15085 STATE OF FLORIDA PROFESSIONAL ENGINEER
NOV 03 2011

FRANYIE ENGINEERS INC.
ANTONIO FRANYIE PE #11640 MECH
VIVIANA FRANYIE PE #15085 ME
Certificate of Authorization # 00002906
10610 NW 27 Street, Miami FL 33172
TEL: (305) 592-1360 FAX: (305) 594-9279
www.franyieengineers.com
DESIGN DRAWN 9-8-11
JOB NUMBER 11-210

9-8-11
PERMIT SET

FD PRINTED: Nov 3 2011

REVISIONS / SUBMISSIONS

1	11-2-11 COORDINATION	AAF

1151

ALL DRAWINGS AND WRITTEN MATERIAL APPEARING HEREIN CONSTITUTE THE ORIGINAL AND UNPUBLISHED WORK OF KOBI KARP AIA, AND MAY NOT BE DUPLICATED, USED, OR DISCLOSED WITHOUT THE EXPRESS WRITTEN CONSENT OF KOBI KARP ARCHITECTURE & INTERIOR DESIGN, INC. AIA. (c) ____2011

BAMBOO GROUP INC.
550 WASHINGTON AVENUE
MIAMI BEACH, FLORIDA

SECOND FLOOR PLAN

Lic. # AR0012578

ARCHITECTURE
INTERIOR DESIGN
PLANNING
AIA ASID NCARB
2915 Biscayne Boulevard
Suite 200
Miami, Florida 33137
T: 305.573.3768
F: 305.573.3766
WWW.KOBIKARP.COM

K • B I KARP

DRAWN BY:	MD,JO
CHECKED BY:	JG
DATE:	09-08-11

E-101

P:\PROJECTS\2011\KOBI KARP\11-210 Paris Theater\Paris_E100-101-102-103-NEW.dwg, E-101, 11/3/2011 4:25:00 PM, ttoy, 1:1

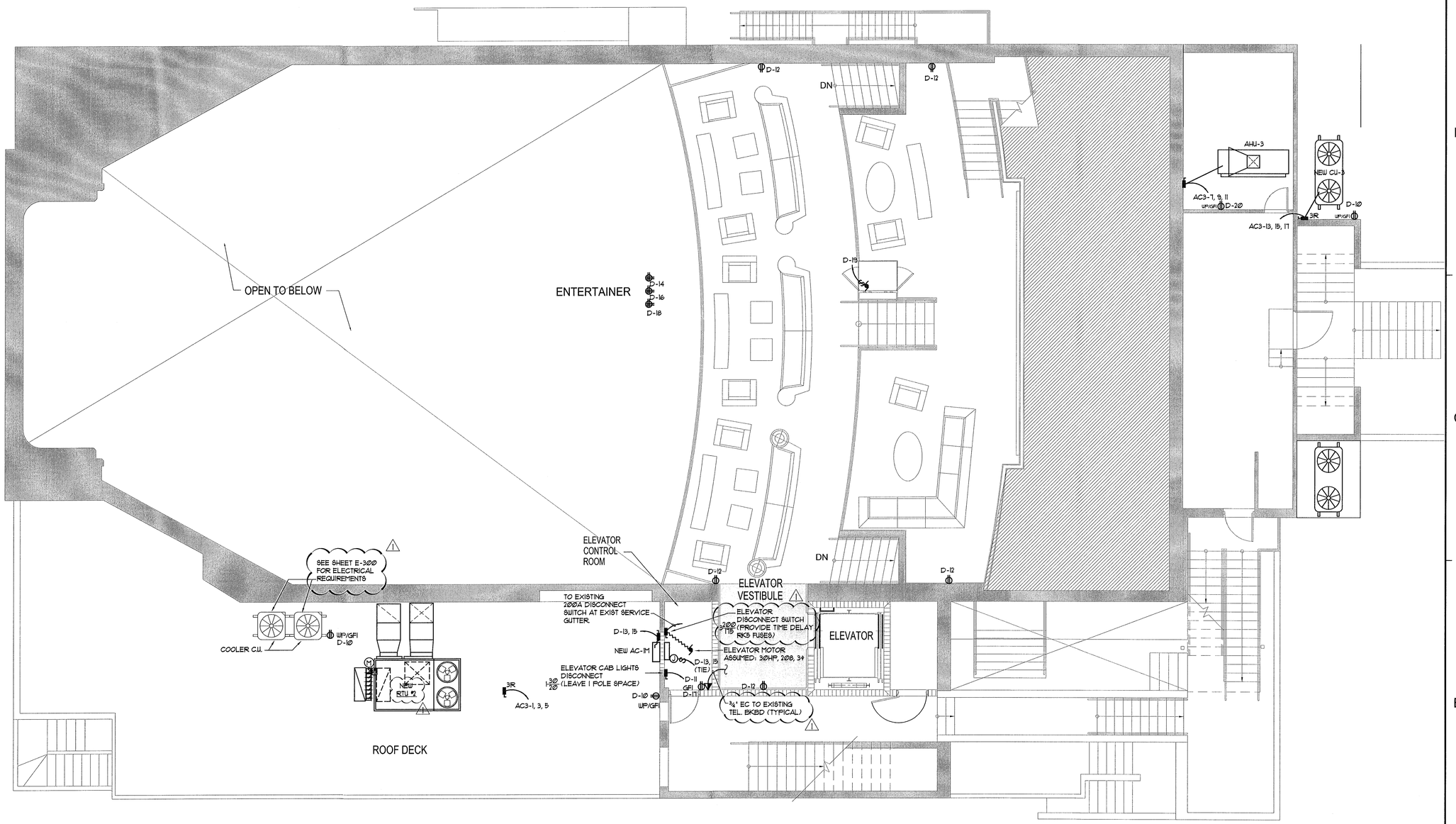

THIRD FLOOR POWER PLAN

SCALE: 3/16"=1'-0"

THESE PLANS ARE FOR BUILDING DEPARTMENT REVIEW. THEY ARE NOT TO BE CONSTRUED AS FINAL CONSTRUCTION DOCUMENTS UNTIL ALL BUILDING DEPARTMENT APPROVALS ARE OBTAINED AND COMMENTS INCORPORATED INTO THESE DWGS. DUE TO THE VARIATIONS IN INTERPRETATIONS OF THE CODE THAT OCCUR IN DIFFERENT MUNICIPALITIES FINAL APPROVAL AND REVIEW IS NEEDED TO ASSURE COMPLIANCE WITH THE APPLICABLE CODES AND STANDARDS.

Electrical Plans Examiner

VIVIANA FRANYIE LICENSE No. 49985 STATE OF FLORIDA PROFESSIONAL ENGINEER NOV 3 2011

FRANYIE ENGINEERS INC.
ANTONIO FRANYIE PE #11640 MECH
VIVIANA FRANYIE PE #49985 ME
Certificate of Authorization # 00002906
10610 NW 27 Street, Miami FL 33172
TEL: (305) 592-1360 FAX: (305) 594-9279
www.franyieengineers.com
DESIGN | DRAWN | 9-8-11
JOB NUMBER 11-210

9-8-11
PERMIT SET

REVISIONS / SUBMISSIONS

1	11-2-11 COORDINATION	AAF

1151

ALL DRAWINGS AND WRITTEN MATERIAL APPEARING HEREIN CONSTITUTE THE ORIGINAL AND UNPUBLISHED WORK OF KOBI KARP AIA, AND MAY NOT BE DUPLICATED, USED, OR DISCLOSED WITHOUT THE EXPRESS WRITTEN CONSENT OF KOBI KARP ARCHITECTURE & INTERIOR DESIGN, INC. AA. (c) ___2011___

BAMBOO GROUP INC.
550 WASHINGTON AVENUE
MIAMI BEACH, FLORIDA

THIRD FLOOR PLAN

Lic. # AR0012578

ARCHITECTURE
INTERIOR DESIGN
PLANNING
AIA ASID NCARB
2915 Biscayne Boulevard
Suite 200
Miami, Florida 33137
P: 305.573.1818
F: 305.573.3766
WWW.KOBIKARP.COM

K • B I
K A R P

DRAWN BY:	MD,JO
CHECKED BY:	JG
DATE:	09-08-11

E-102

P:\PROJECTS\2011\KOBI KARP\11-210 Paris Theater\Paris_E100-101-102-103-NEW.dwg, E-102, 11/3/2011 4:25:10 PM, tiny, 1:1

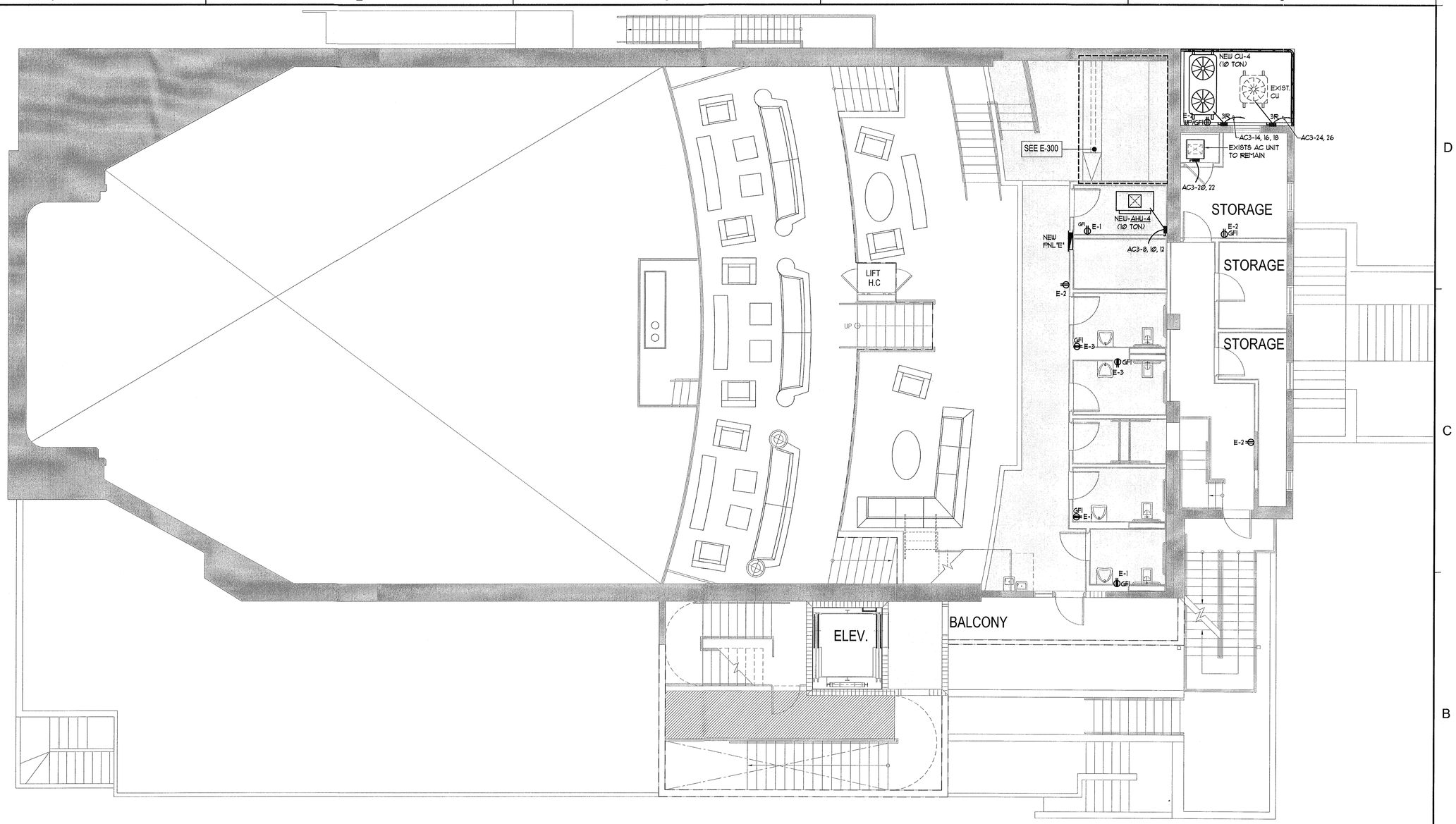

FOURTH FLOOR POWER PLAN

SCALE: 3/16"=1'-0"

THESE PLANS ARE FOR BUILDING DEPARTMENT REVIEW. THEY ARE NOT TO BE CONSTRUED AS FINAL CONSTRUCTION DOCUMENTS UNTIL ALL BUILDING DEPARTMENT APPROVALS ARE OBTAINED AND COMMENTS INCORPORATED INTO THESE DWGS. DUE TO THE VARIATIONS IN INTERPRETATIONS OF THE CODE THAT OCCUR IN DIFFERENT MUNICIPALITIES FINAL APPROVAL AND REVIEW IS NEEDED TO ASSURE COMPLIANCE WITH THE APPLICABLE CODES AND STANDARDS.

Electrical Plans Examiner

VIVIANA FRANYIE
LICENSE
No. 49985
STATE OF FLORIDA
PROFESSIONAL ENGINEER
Nov 10, 2011

FRANYIE ENGINEERS INC.
ANTONIO FRANYIE
PE #11640 MECH
VIVIANA FRANYIE
PE #49985 ME
Certificate of Authorization # 000029306
10610 NW 27 Street, Miami, FL 33172
TEL: (305) 592-1360 FAX: (305) 594-9279
www.franyieengineers.com
DESIGN: DRAWN: 9-8-11
JOB NUMBER 11-210

FEI PRINTED: Nov 3, 2011

9-8-11
PERMIT SET

REVISIONS / SUBMISSIONS

1151

ALL DRAWINGS AND WRITTEN MATERIAL APPEARING HEREIN CONSTITUTE THE ORIGINAL AND UNPUBLISHED WORK OF KOBI KARP AIA, AND MAY NOT BE DUPLICATED, USED, OR DISCLOSED WITHOUT THE EXPRESS WRITTEN CONSENT OF KOBI KARP ARCHITECTURE & INTERIOR DESIGN, INC. AIA. (c) __2011__

BAMBOO GROUP INC.
550 WASHINGTON AVENUE
MIAMI BEACH, FLORIDA

FOURTH FLOOR PLAN

Lic. #AR0012578

ARCHITECTURE
INTERIOR DESIGN
PLANNING

AIA ASID NCARB

2915 Biscayne Boulevard
Suite 200
Miami, Florida 33137
O: 305.573.1818
F: 305.573.3766

WWW.KOBIKARP.COM

K • B I
K A R P

DRAWN BY:	MD,JO
CHECKED BY:	JG
DATE:	09-08-11

E-103

P:\PROJECTS\2011\KOBI KARP\11-210 Paris Theater\Paris_E100-101-102-103-NEW.dwg, E-103, 11/3/2011 4:25:15 PM, by, 111

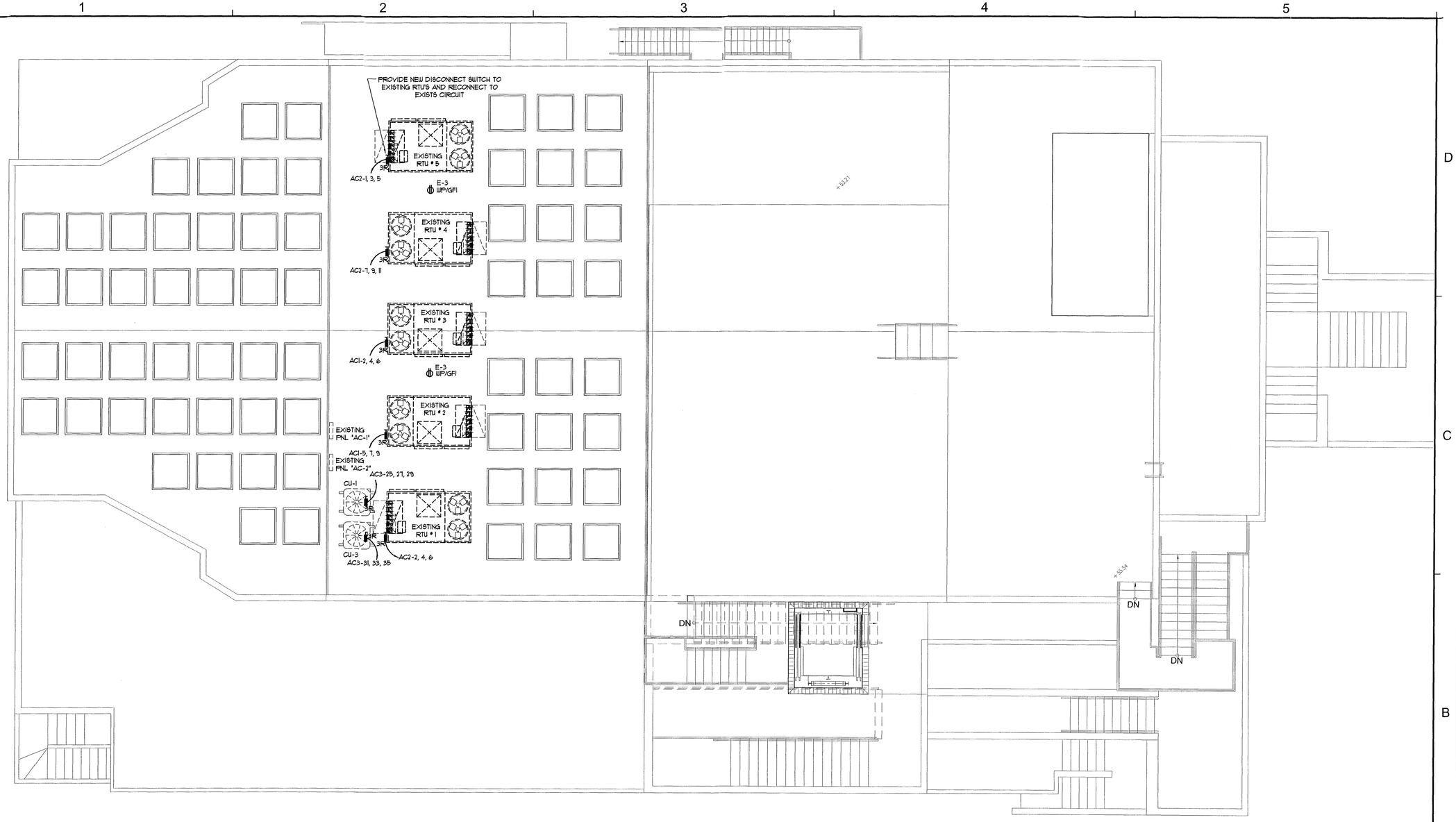

ROOF POWER PLAN

SCALE: 3/16"=1'-0"

9-8-11
PERMIT SET

THESE PLANS ARE FOR BUILDING DEPARTMENT REVIEW. THEY ARE NOT TO BE CONSTRUED AS FINAL CONSTRUCTION DOCUMENTS UNTIL ALL BUILDING DEPARTMENT APPROVALS ARE OBTAINED AND COMMENTS INCORPORATED INTO THESE DWGS. DUE TO THE VARIATIONS IN INTERPRETATIONS OF THE CODE THAT OCCUR IN DIFFERENT MUNICIPALITIES FINAL APPROVAL AND REVIEW IS NEEDED TO ASSURE COMPLIANCE WITH THE APPLICABLE CODES AND STANDARDS.

Electrical Plans Examiner

VIVIANA FRANNIE LICENSE No. 49965 STATE OF FLORIDA PROFESSIONAL ENGINEER
NOV 3 2011

FRANNIE ENGINEERS INC.
ANTONIO FRANNIE PE #11840 MECH
VIVIANA FRANNIE PE #49965 ME
Certificate of Authorization # 00002906
10610 Unwind Street Miami, FL 33172
TEL: (305) 592-1360 FAX: (305) 594-9279
www.franniesengineers.com
DESIGN: DRAWN: 9-8-11
JOB NUMBER 11-210
FE: FRANNIE Nov 3 2011

REVISIONS / SUBMISSIONS

1151

ALL DRAWINGS AND WRITTEN MATERIAL APPEARING HEREIN CONSTITUTE THE ORIGINAL AND UNPUBLISHED WORK OF KOBI KARP AIA, AND MAY NOT BE DUPLICATED, USED, OR DISCLOSED WITHOUT THE EXPRESS WRITTEN CONSENT OF KOBI KARP ARCHITECTURE & INTERIOR DESIGN, INC. AIA. (c) _ 2011 _

BAMBOO GROUP INC.
550 WASHINGTON AVENUE
MIAMI BEACH, FLORIDA

ROOF FLOOR PLAN

Lic. # AR0012578

ARCHITECTURE
INTERIOR DESIGN
PLANNING
AIA ASID NCARB
2915 Biscayne Boulevard
Suite 203
Miami, Florida 33137
O: 305.573.1818
F: 305.573.3766
WWW.KOBIKARP.COM

K • B I KARP

DRAWN BY:	MD,JO
CHECKED BY:	JG
DATE:	09-08-11

E-104

P:\PROJECTS\2011\KOBI KARP\11-210 Park Theater\Park_E100-101-102-103-NEW.dwg, E-104, 11/3/2011 4:29:20 PM, Ady, 1:1

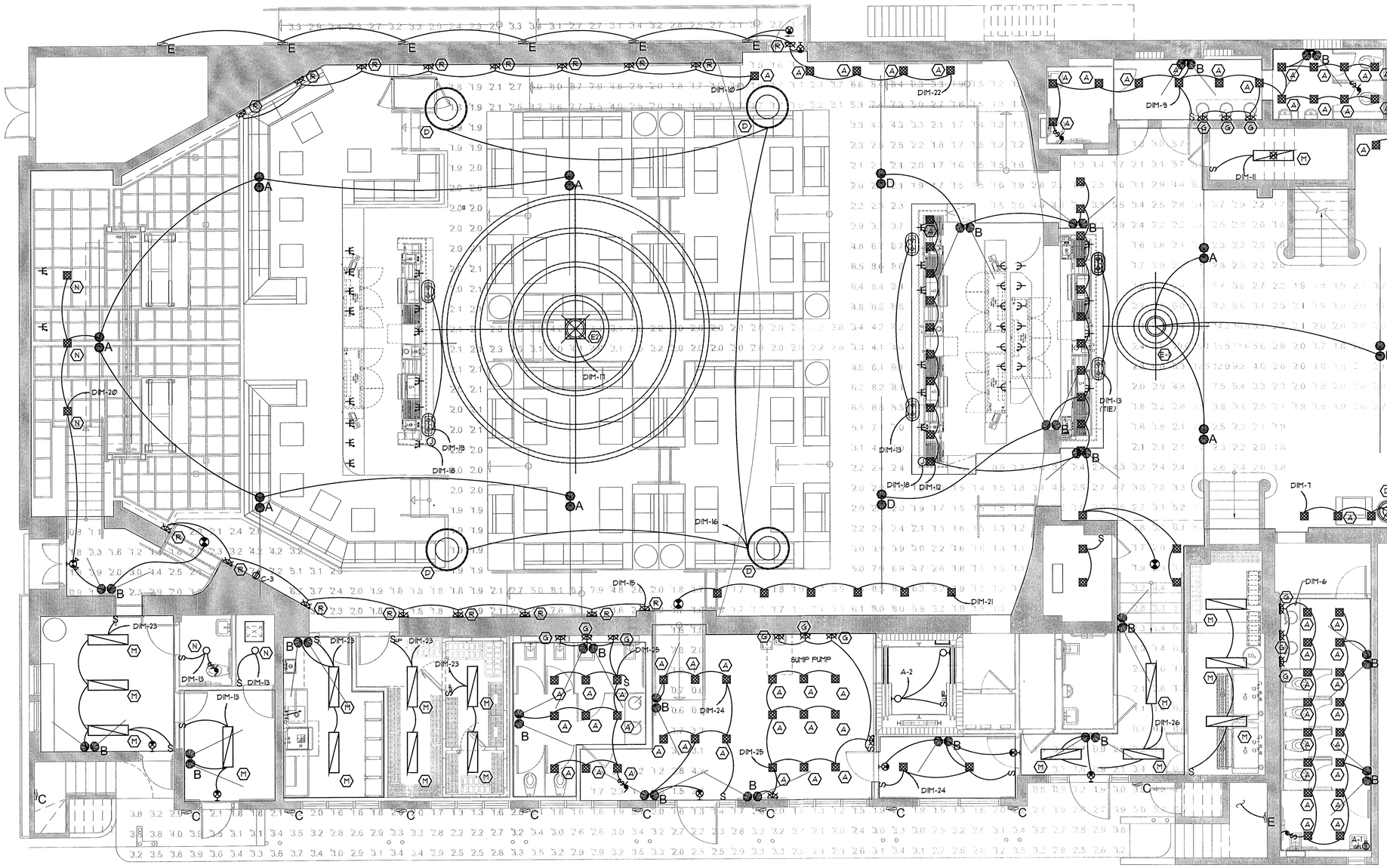

GROUND FLOOR PLAN - LIGHTING

SCALE: 3/16"=1'-0"

NOTE: PHOTOMETRICS ARE FOR PATH OF EGRESS LIGHTS.

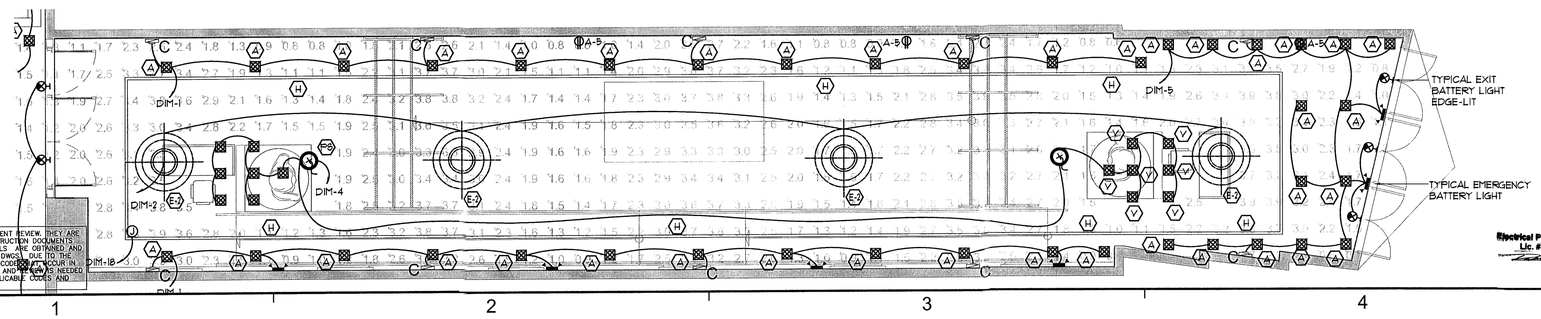

THESE PLANS ARE FOR BUILDING DEPARTMENT REVIEW. THEY ARE NOT TO BE CONSTRUED AS FINAL CONSTRUCTION DOCUMENTS UNTIL ALL BUILDING DEPARTMENT APPROVALS ARE OBTAINED AND COMMENTS INCORPORATED INTO THESE DWGS. DUE TO THE VARIATIONS IN INTERPRETATIONS OF THE CODES THAT OCCUR IN DIFFERENT MUNICIPALITIES FINAL APPROVAL AND REVISIONS NEEDED TO ASSURE COMPLIANCE WITH THE APPLICABLE CODES AND STANDARDS.

Electrical Plans Examiner
Lic. # PX 2611

VIVIANA FRANYIE LICENSE No. 49985 STATE OF FLORIDA PROFESSIONAL ENGINEER

FRANYIE ENGINEERS INC.
ANTONIO FRANYIE PE #11640 MEDI
VIVIANA FRANYIE PE #49985 ME
Certificate of Authorization # 00002906
10810 NW 27 Street, Miami FL 33172
TEL: (305) 592-1360 FAX: (305) 594-9279
www.franyieengineers.com
DESIGN | DRAWN | 9-8-11
JOB NUMBER 11-210

9-8-11
PERMIT SET

REVISIONS / SUBMISSIONS

1	11-2-11 COORDINATION	AAF
2	11-18-11 BD COMMENT	AAF

1151

ALL DRAWINGS AND WRITTEN MATERIAL APPEARING HEREIN CONSTITUTE THE ORIGINAL AND UNPUBLISHED WORK OF KOBI KARP AIA, AND MAY NOT BE DUPLICATED, USED, OR DISCLOSED WITHOUT THE EXPRESS WRITTEN CONSENT OF KOBI KARP ARCHITECTURE & INTERIOR DESIGN, INC. AIA. (c) _2011_

BAMBOO GROUP INC.
550 WASHINGTON AVENUE
MIAMI BEACH, FLORIDA

GROUND FLOOR PLAN

Lic. # AR00012578

ARCHITECTURE
INTERIOR DESIGN
PLANNING
AIA ASID NCARB
2915 Biscayne Boulevard
Suite 200
Miami, Florida 33137
O: 305.573.1818
F: 305.573.3766
WWW.KOBIKARP.COM

K • B I KARP

DRAWN BY:	MD,JO
CHECKED BY:	JG
DATE:	09-08-11

E-200

P:\PROJECTS\2011\KOBI KARP\11-210 Paris Theater\Plans_E\200-201-202-203-LIGHTING.dwg, E-200, 11/18/2011 5:11:25 PM, tdy, 1:1

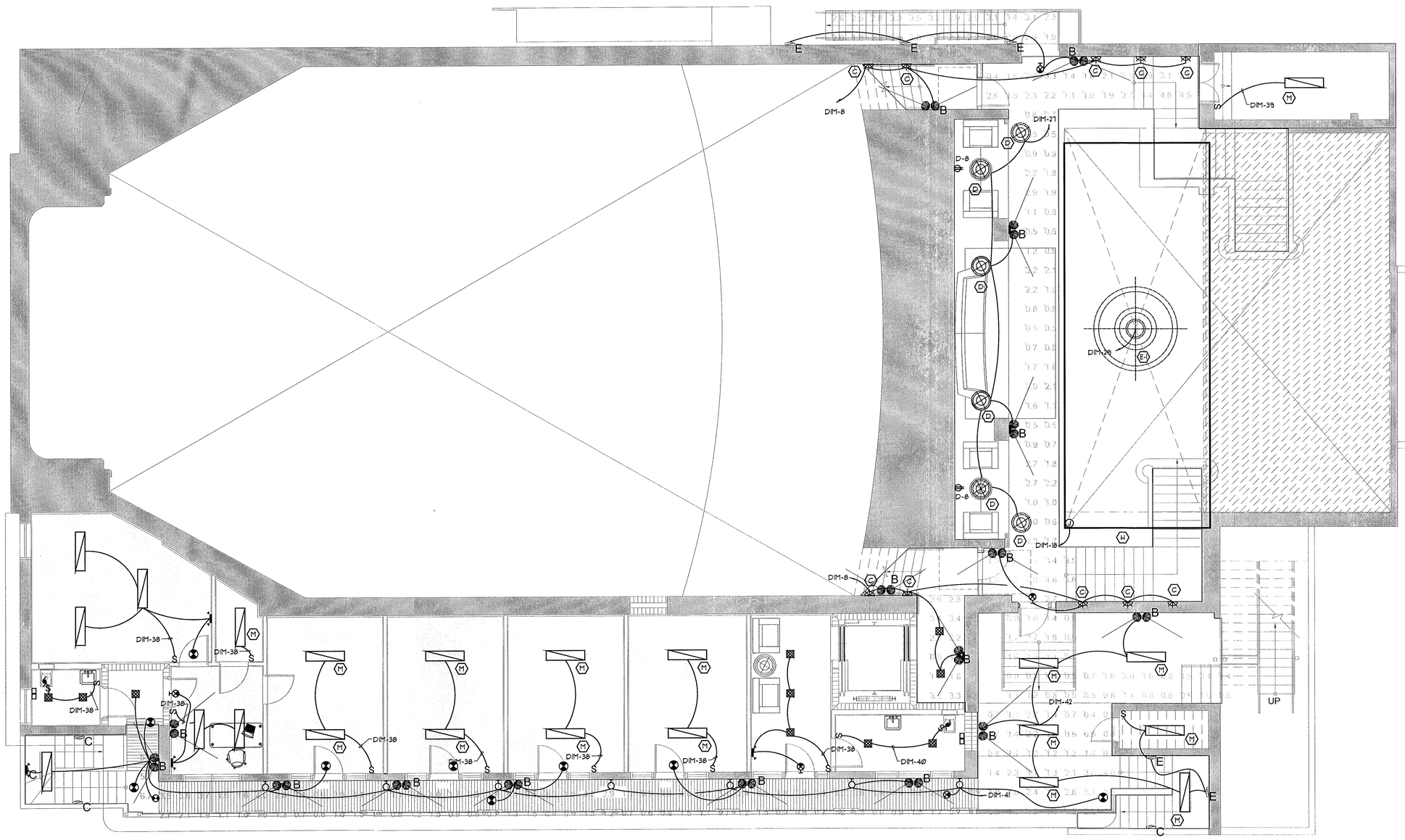

SECOND FLOOR PLAN - LIGHTING

SCALE: 3/16"=1'-0"

NOTE: PHOTOMETRICS ARE FOR PATH OF EGRESS LIGHTS.

THESE PLANS ARE FOR BUILDING DEPARTMENT REVIEW. THEY ARE NOT TO BE CONSTRUED AS FINAL CONSTRUCTION DOCUMENTS UNTIL ALL BUILDING DEPARTMENT APPROVALS ARE OBTAINED AND COMMENTS INCORPORATED INTO THESE DWGS. DUE TO THE VARIATIONS IN INTERPRETATIONS OF THE CODE THAT OCCUR IN DIFFERENT MUNICIPALITIES FINAL APPROVAL AND REVIEW IS NEEDED TO ASSURE COMPLIANCE WITH THE APPLICABLE CODES AND STANDARDS.

Electrical Plans Examiner
Lic. # PX 2011

IWIANA FRANYIE LICENSE No. 49985 STATE OF FLORIDA PROFESSIONAL ENGINEER
Nov. 18, 2011

FRANYIE ENGINEERS INC.
ANTONIO FRANYIE PE #11640 MECH
IWIANA FRANYIE PE #49985 ME
Certificate of Authorization # 00002906
10610 NW 27 Street, Miami, FL 33172
TEL: (305) 592-1360 FAX: (305) 594-9279
www.franyieengineers.com

DESIGN	DRAWN
9-8-11	
JOB NUMBER	11-210

FE PRINTED:Nov 18, 2011

9-8-11
PERMIT SET

REVISIONS / SUBMISSIONS

1	11-2-11 COORDINATION	AAF
2	11-18-11 BD COMMENT	AAF

1151

ALL DRAWINGS AND WRITTEN MATERIAL APPEARING HEREIN CONSTITUTE THE ORIGINAL AND UNPUBLISHED WORK OF KOBI KARP AIA, AND MAY NOT BE DUPLICATED, USED, OR DISCLOSED WITHOUT THE EXPRESS WRITTEN CONSENT OF KOBI KARP ARCHITECTURE & INTERIOR DESIGN, INC. A.R. (c) _2011_

BAMBOO GROUP INC.
550 WASHINGTON AVENUE
MIAMI BEACH, FLORIDA

SECOND FLOOR PLAN

Lic. # AR0012578

ARCHITECTURE
INTERIOR DESIGN
PLANNING
AIA ASID NCARB
2915 Biscayne Boulevard
Suite 200
Miami, Florida 33137
O: 305.573.1818
F: 305.573.3766
WWW.KOBIKARP.COM

K • B I
K A R P

DRAWN BY:	MD,JO
CHECKED BY:	JG
DATE:	09-08-11

E-201

P:\PROJECTS\2011\KOBI KARP\11-210 Paris Theater\Paris_E200-201-202-203-LIGHTING.dwg, E-201, 11/18/2011 5:11:30 PM, lzy, 1:1

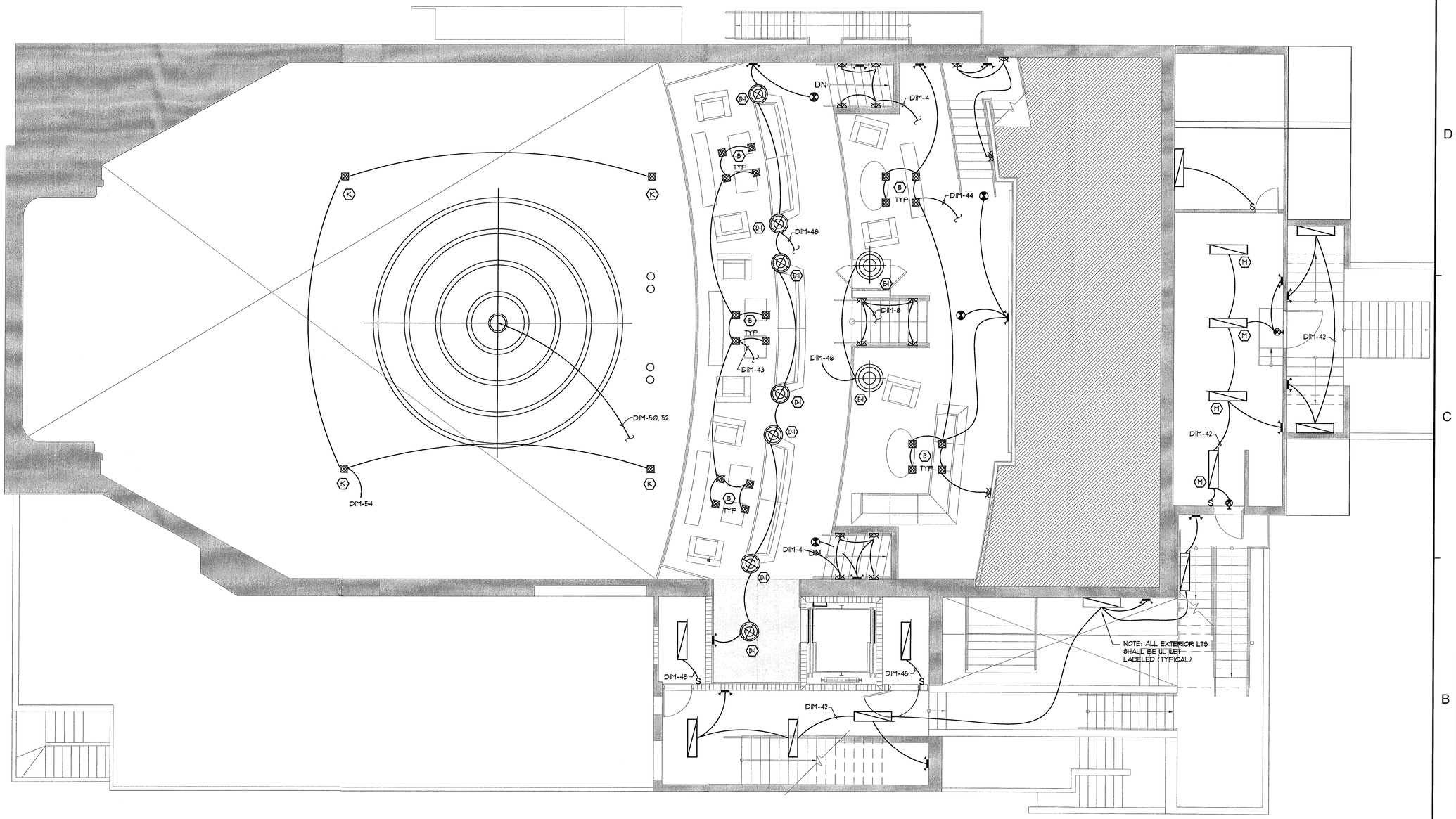

THIRD FLOOR LIGHTING PLAN

SCALE: 3/16"=1'-0"

9-8-11
PERMIT SET

Electrical Plans Examiner

VIVIANA FRANYIE LICENSE No. 49985 STATE OF FLORIDA PROFESSIONAL ENGINEER

FRANYIE ENGINEERS, INC.
ANTONIO FRANYIE PE #11640 MECH
VIVIANA FRANYIE PE #49985 ME
Certificate of Authorization # 00002906
10610 NW 27 Street, Miami FL 33172
TEL: (305) 592-1360 FAX: (305) 594-9279
www.franyieengineers.com
DESIGN: DRAWN: 9-8-11
JOB NUMBER 11-210
FEI PRINTED: Nov 3 2011

THESE PLANS ARE FOR BUILDING DEPARTMENT REVIEW. THEY ARE NOT TO BE CONSTRUED AS FINAL CONSTRUCTION DOCUMENTS UNTIL ALL BUILDING DEPARTMENT APPROVALS ARE OBTAINED AND COMMENTS INCORPORATED INTO THESE DWGS. DUE TO THE VARIATIONS IN INTERPRETATIONS OF THE CODE THAT OCCUR IN DIFFERENT MUNICIPALITIES FINAL APPROVAL AND REVIEW IS NEEDED TO ASSURE COMPLIANCE WTH THE APPLICABLE CODES AND STANDARDS.

REVISIONS / SUBMISSIONS

1	11-2-11 COORDINATION	AAF

1151

ALL DRAWINGS AND WRITTEN MATERIAL APPEARING HEREIN CONSTITUTE THE ORIGINAL AND UNPUBLISHED WORK OF KOBI KARP AIA, AND MAY NOT BE DUPLICATED, USED, OR DISCLOSED WITHOUT THE EXPRESS WRITTEN CONSENT OF KOBI KARP ARCHITECTURE & INTERIOR DESIGN, INC. AIA. (c) 2011

BAMBOO GROUP INC.
550 WASHINGTON AVENUE
MIAMI BEACH, FLORIDA

THIRD FLOOR PLAN

Lic. # AR0012578

ARCHITECTURE
INTERIOR DESIGN
PLANNING

AIA ASID NCARB

2915 Biscayne Boulevard
Suite 200
Miami, Florida 33137
O: 305.573.1818
F: 305.573.3766

WWW.KOBIKARP.COM

K • B I
K A R P

DRAWN BY:	MD,JO
CHECKED BY:	JG
DATE:	09-08-11

E-202

P:\PROJECTS\2011\KOBI KARP\11-210 Paris Theater\Paris_E200-201-202-203-LIGHTING.dwg, E-202, 11/3/2011 4:25:41 PM, tzy, 1:1

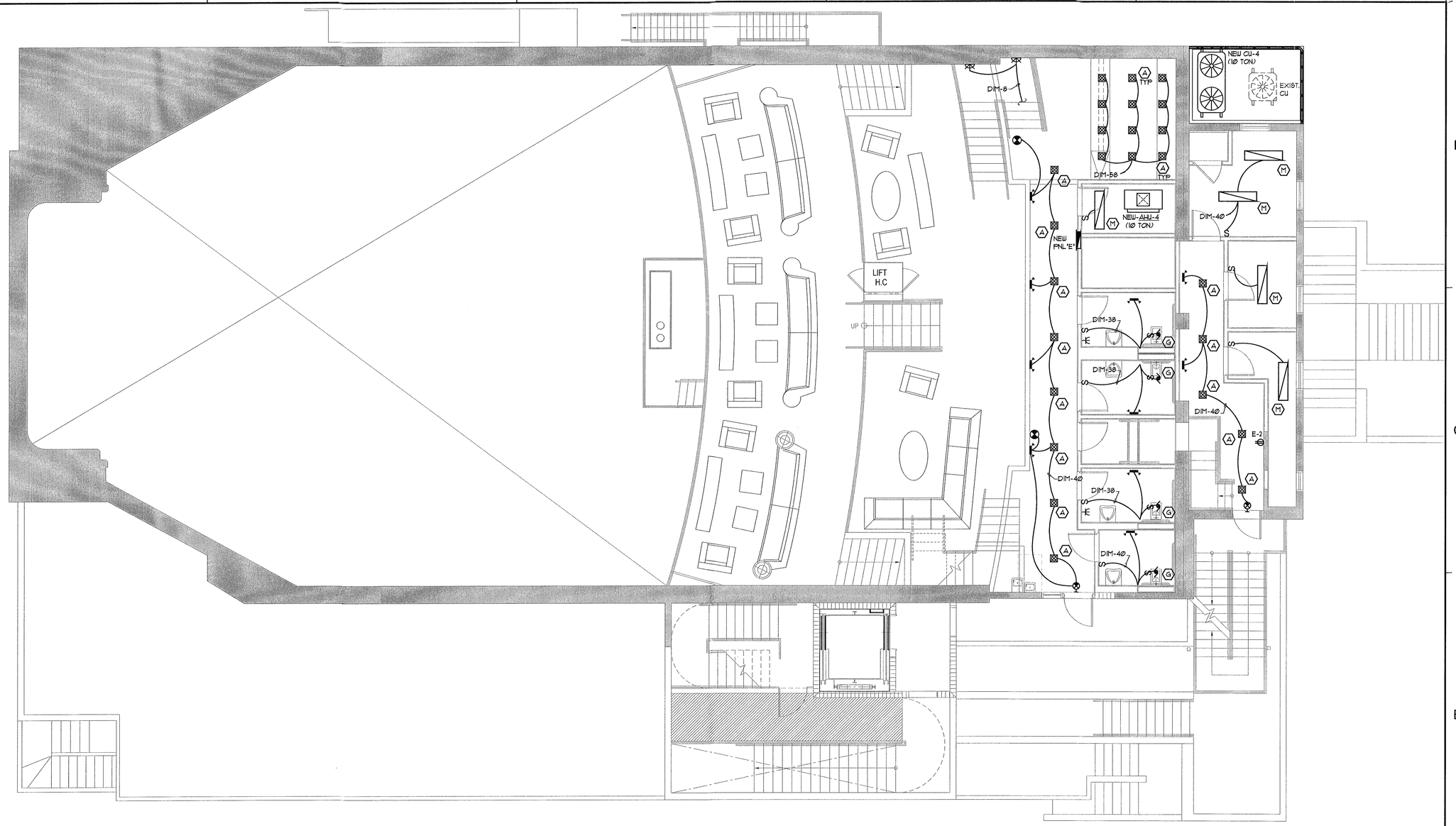

FOURTH FLOOR PLAN

SCALE: 3/16"=1'-0"

THESE PLANS ARE FOR BUILDING DEPARTMENT REVIEW. THEY ARE NOT TO BE CONSTRUED AS FINAL CONSTRUCTION DOCUMENTS UNTIL ALL BUILDING DEPARTMENT APPROVALS ARE OBTAINED AND COMMENTS INCORPORATED INTO THESE DWGS. DUE TO THE VARIATIONS IN INTERPRETATIONS OF THE CODE THAT OCCUR IN DIFFERENT MUNICIPALITIES FINAL APPROVAL AND REVIEW IS NEEDED TO ASSURE COMPLIANCE WITH THE APPLICABLE CODES AND STANDARDS.

Electrical Plans Examiner

VIVIANA FRANYIE LICENSE No. 49985 STATE OF FLORIDA PROFESSIONAL ENGINEER

FRANYIE ENGINEERS INC.
ANTONIO FRANYIE PE #11640 MECH
VIVIANA FRANYIE PE #49985 ME
Certificate of Authorization # 00002906
10810 NW 12 Street, Miami FL 33172
TEL: (305) 592-1360 FAX: (305) 594-9278
www.franyieengineers.com
DESIGN DRAWN 9-8-11
JOB NUMBER 11-210

9-8-11
PERMIT SET

FD PRINTED Nov 3 2011

REVISIONS / SUBMISSIONS
1 11-2-11 COORDINATION AAF

1151

ALL DRAWINGS AND WRITTEN MATERIAL APPEARING HEREIN CONSTITUTE THE ORIGINAL AND UNPUBLISHED WORK OF KOBI KARP AIA, AND MAY NOT BE DUPLICATED, USED, OR DISCLOSED WITHOUT THE EXPRESS WRITTEN CONSENT OF KOBI KARP ARCHITECTURE & INTERIOR DESIGN, INC. AIA. (c) 2011

BAMBOO GROUP INC.
550 WASHINGTON AVENUE
MIAMI BEACH, FLORIDA

FOURTH FLOOR PLAN

Lic.# AR0012578

ARCHITECTURE
INTERIOR DESIGN
PLANNING
AIA ASID NCARB
2915 Biscayne Boulevard
Suite 200
Miami, Florida 33137
O: 305.573.1818
F: 305.573.3766
WWW.KOBIKARP.COM

K • B I
K A R P

DRAWN BY:	MD,JO
CHECKED BY:	JG
DATE:	09-08-11

E-203

P:\PROJECTS\2011\KOBI KARP\11-210 Paris Theater\Paris_E200-201-202-203-LIGHTING.dwg, E-203, 11/3/2011 4:25:46 PM, tay, 1:1