Owner RICHARD LEAR Mailing Address Permit No. 25272 Cost $ 16,000

Lot 3 Block 8 Subdivision Rivo Alto Isle. Address 110 3rd Terrace

General Contractor LEAR BUILDERS 9494 Bond No. 3630 3233-01-0920

Architect E. A. NOLAN Engineer

Zoning Regulations: Use RD Area 22 Lot Size 60 x 125

Building Size: Front 40 Depth 83 Height 15 Stories 1

Certificate of Occupancy No. 895 (Aug. 6,1948) Use RESIDENCE & GARAGE - 3 bedrooms, 3 baths

Type of Construction C.B.S. Foundation Spread footing12 x 30 Roof tile Date Sept. 3, 1947

#2155

Plumbing Contractor Sewer Connection Date

26933 J. & W. Plumbing* Temporary Closet 1 July 15,1948*

Plumbing Contractor # 25585 J. & W. Plumbing Date Sept. 11,1947

Water Closets 3 Bath Tubs 1 Floor Drains Septic Tank 1

Lavatories 3 Showers 2 Grease Traps Laundry Tray 1 Electric water heater 1

Urinals Sinks 1 Drinking Fountains Sill Cooks 4

Gas Stoves 1* Gas Heaters Rough Approved T. A. O'Neill Date July 16, 1948

Gas Refrigerator 1* Radiators Gas Turn On Approved

Septic Tank Contractor #25537 Superior Septic Tank 1 125' drain tile Tank Size 700 Gals. Date Sept. 3, 1947

Oil Burner Contractor Tank Size Date

Sprinkler System

Electrical Contractor # 25399 Astor Electric: Address Date Dec.6,1947

OUTLETS Switch 15 Range Motors Fans Temporary Service

Light 20 HEATERS Water 1

Receptacles 22 Space 2, Centers of Distribution 2,

Refrigerators 1

Irons 1 Sign Outlets

No. FIXTURES 20 Electrical Contractor Date

FINAL APPROVED BY Woodmansee Date of Service May 5, 1948

Alterations or Repairs—Over

ALTERATIONS & ADDITIONS

Building Permits: # 39497 Two air conditioning units- 1 wallunit 3/4 ton & 1 window unit 3/4 ton- Barrett Electric Co. ok - A.Plaag 9-29-52 $ 82..... Sept. 18, 1952

#60847 Miami Air Conditioning: 4 H.P. package unit air conditioner, $1200,12/18/59 OK 4/6/60 Plaag
#67754 Scott Salzer Realty: For sale and/or for rent sign - $5.00 - 8/1/62
#68673 Peele Roofing Co.: Roof repair - $70. - 1/10/63
#75785 North Dade Roofing Co.: Reroofing - $1575 - 2/8/66 OK Brown 2/17/66
#75797 Chase Federal Savings & Loan, owner: Paint int. and ext. - $1,000 - 2/10/66
#78856 Kitchen Decor: Remodel kitchen cabinets - $1484 - 8/28/67 OK DELANEY 1/9/68
#00222 - Keyes Co. - ~~xxxxxx~~ for sale sign #312 $5.00 12/10/71
#04672-Southern Bilt Kitchens-Remove old and install new kitchen-$700-11-28-73
7/30/80 #18592 O.K. Const. driveway & walks $750

Plumbing Permits: #40259 Economy Plbg: 1 4" Sewer - Jan. 28, 1958 OK 1/29/58 Rothman
#46091 A.B.S. Plbg., Inc.: replace 2 lavatories, repl. 1 sink, repl. 1 dish washing machine. 9/5/67
#61174 8/19/83 Serota Plumb - water service

Electrical Permits: #37580 Martin Electric: 2 Motors A.C. Sept.18,1952 A.Plaag 10-1-52
#54642 Griffin Elec: 1 center of distribution, 1 motor (2-5HP)- 1/6/60 OK 1/18/60 Newbold
#65026 C. J. Kay Elect. Co.: 2 appliance outlets. 9/7/67
#50785-Triple A Plumbing- 1 dishwasher-3-19-74

BUILDING PERMITS: #M8801315 - Royal Mechanical - 3 A/C central - 8-10-88

#M8900557 - Sitra For Service - 5ton A/C central replacement - 4-11-89

OK-E.Brown
8-11-52

Owner MR. & MRS. SAMUEL KISHNER
Permit No. 38413 Cost $ 14,500..
Lot 4 Block 8 Subdivision RIVO ALTO ISLAND
Address 250 E. Rivo Alto Drive
General Contractor Samuel Kishner 9495
Bond No. 5333
Architect M. S. Weintraub
Engineer 3233-01-0930
Zoning Regulations: Use RD Area 22
Lot Size 60 X 125
Building Size: Front 88' Depth 40'
Height 13' Stories 1
Certificate of Occupancy No. 1846 (8-15-52)
Use RESIDENCE & GARAGE-2 bedrooms& 2 baths
Type of Construction #3 CBS Foundation Spread Footing 12 x 24 Roof Flat Date May 6,1952

PLUMBING Contractor # 33320 Serota Plumbing Co.
Sewer Connection See Over Date May 7, 1952
Temporary Water Closet 1

Water Closets 3
Lavatories 3
Bath Tubs 1
Showers 1
Urinals
Sinks 1
Dish Washing Machine
Laundry Trays 1
Laundry Washing Machines
Drinking Fountains
Floor Drains
Grease Traps
Safe Wastes

Swimming Pool Traps
Steam or Hot Water Boilers
Down Spouts
Wells
ROUGH APPROVAL L.Rothman 5-20-52 - E. Cox 6-17-52
FINAL APPROVAL E. Cox 8-14-52

GAS Contractor #33513 Nathan Serota Date June 19, 1952
Gas Ranges 1
Gas Water Heaters 1
Gas Space Heaters 1 , 1
Gas Refrigerators
Gas Steam Tables
Gas Broilers
Gas Frylators
Gas Pressing Machine
Gas Vents for Stove

~~Electric~~

GAS Rough APPROVAL
GAS FINAL APPROVAL E.C. 8-14-52

AIR CONDITIONING Contractor
SEPTIC TANK Contractor # 33330 Acme Septic Tank Co: 1 tank - 600 gals. -May 8, 1952 -OK-L.R. 5-15-52
OIL BURNER Contractor
SPRINKLER Contractor

ELECTRICAL Contractor #36810 Kenny Elec. Co. Date June 20, 1952
Temporary Service #36500 Kenny Elec. 5/6/52

OUTLETS	Switches 31	Ranges	
	Lights 25	Irons	1
	Receptacles 24	Refrigerators	1
		Fans	2
		Motors	
HEATERS	Water 1	Appliances	3
	Space 2		
FIXTURES 25		Electrical Contractor	Date

Neon Transformers
Sign Outlets
Meter Change
Centers of Distributions 2
Service -Equipment 1
Violations

FINAL APPROVAL
By P.Megginniss
Date 8-1-52

Alterations or Repairs—Over

ALTERATIONS & ADDITIONS

Building Permits: #41895 Install one 3/4-HP Window Unit Air Cond: Paulson Engr: Al Plaag, 7-30-53 $ 300: 6/22/53-OK,/

#56881 Royal Improvement Co. of Fla: Exterior Painting - $380.00 - 7/28/58

#76478 Chastain Fence Co., Inc.: 60 feet of 5 feet C. L. fence - $115 - 6/20/66 OK Brown 6/24/66

#82667 Owner repair clean & Paint $500.00 7/15/69

#06425-Orkin Ext.Co.-Fumigation-$400-11-4--74

#MO8680 11/20/86 R.V. Air Cond - 2-10 kw space heaters, 2-4 air cond central

---

Plumbing Permits:

#39300 Serota Plbg: 1 4" Sewer - April 3, 1957

#62991 12/7/86 J B & P Plumb - 1 close dryer, 1 heater replace

---

Electrical Permits: #58580 Astor Elec. Service, Inc.: 1 motor, 0-1 hp - 8/6/62

#81548 11/13/86 R & H Elec - 1-150 amp service size, 2-2½ ton air cond, 2-5 kw strip heater

COASTAL CONTROL ZONE

CUMULATIVE COST OF CONSTRUCTION OF PERMITS ISSUED

DATE ISSUED	PROCESS NO.	DESCRIPTION OF WORK	WORK COST	CUMULATIVE WORK COST	APPRAISED BLDG. VALUE BEFORE REMODEL	%	COMMENTS	BUILDING PERMIT NO.
8-24-89		REPAVE 500 sq ft. existing driveway	$900.00					B5891925

BUILDING PERMITS: #BS891925 - 8-24-89 - Owner - Repave 500 sq. ft. existing driveway - $900.00

R15042 72

MIAMI-DADE COUNTY
DEPARTMENT OF REGULATORY AND ECONOMIC RESOURCES (RER)
BOARD AND CODE ADMINISTRATION DIVISION

MIAMI-DADE COUNTY
PRODUCT CONTROL SECTION
11805 SW 26 Street, Room 208
T (786) 315-2700 F (786) 315-2599
www.miamidade.gov/economy

NOTICE OF ACCEPTANCE (NOA)

ES Windows, LLC
10653 N.E. Quaybridge Ct.
Miami, FL 33138

SCOPE:

This NOA is being issued under the applicable rules and regulations governing the use of construction materials. The documentation submitted has been reviewed and accepted by Miami-Dade County RER-Product Control Section to be used in Miami-Dade County and other areas where allowed by the Authority Having Jurisdiction (AHJ).

This NOA shall not be valid after the expiration date stated below. The Miami-Dade County Product Control Section (In Miami-Dade County) and/ or the AHJ (In areas other than Miami-Dade County) reserve the right to have this product or material tested for quality assurance purposes. If this product or material fails to perform in the accepted manner, the manufacturer will incur the expense of such testing and the AHJ may immediately revoke, modify, or suspend the use of such product or material within their jurisdiction. RER reserves the right to revoke this acceptance, if it is determined by Miami-Dade County Product Control Section that this product or material fails to meet the requirements of the applicable building code.

This product is approved as described herein, and has been designed to comply with the Florida Building Code, including the High Velocity Hurricane Zone.

DESCRIPTION: Series "2000/ 2050" Aluminum Horizontal Sliding Window – L.M.I.

APPROVAL DOCUMENT: Drawing No. **W03-75**, titled "Series-2000/ 2050 Alum. Horiz. Sliding Wdw. (L.M.I)", sheets 01, 1.1, 02 and 03 through 09 of 09, dated 08/27/03, with revision "**H**" dated 09/16/14, prepared by Al-Farooq Corporation, signed and sealed by Javad Ahmad, P. E., bearing the Miami-Dade County Product Control Revision stamp with the Notice of Acceptance number and Expiration date by the Miami-Dade County Product Control Section.

MISSILE IMPACT RATING: Large and Small Missile Impact Resistant

LABELING: Each unit shall bear a permanent label with the manufacturer's name or logo, **Barranquilla, Colombia, America Latina**, series, and following statement: "Miami-Dade County Product Control Approved", unless otherwise noted herein.

RENEWAL of this NOA shall be considered after a renewal application has been filed and there has been no change in the applicable building code negatively affecting the performance of this product.

TERMINATION of this NOA will occur after the expiration date or if there has been a revision or change in the materials, use, and/ or manufacture of the product or process. Misuse of this NOA as an endorsement of any product, for sales, advertising or any other purposes shall automatically terminate this NOA. Failure to comply with any section of this NOA shall be cause for termination and removal of NOA.

ADVERTISEMENT: The NOA number preceded by the words Miami-Dade County, Florida, and followed by the expiration date may be displayed in advertising literature. If any portion of the NOA is displayed, then it shall be done in its entirety.

INSPECTION: A copy of this entire NOA shall be provided to the user by the manufacturer or its distributors and shall be available for inspection at the job site at the request of the Building Official.

This NOA **revises NOA No. 13-0617.28** and consists of this page 1 and evidence pages E-1, E-2 and E-3, as well as approval document mentioned above.

The submitted documentation was reviewed by **Jaime D. Gascon, P. E.**

MIAMI-DADE COUNTY APPROVED

J. Gascon
1/29/15

ES Windows, LLC

NOTICE OF ACCEPTANCE: EVIDENCE SUBMITTED

A. DRAWINGS

1. Manufacturer's die drawings and sections.
   (Submitted under NOA's No.'s 03–0910.02 and 09–1008.06)
2. Drawing No. **W03–75**, titled "Series–2000/ 2050 Alum. Horiz. Sliding Wdw. (L.M.I)", sheets 01, 1.1, 02 and 03 through 09 of 09, dated 08/27/03, with revision "H" dated 09/16/14, prepared by Al–Farooq Corporation, signed and sealed by Javad Ahmad, P.E.

B. TESTS

1. Test reports on:
   1) Air Infiltration Test, per FBC, TAS 202–94
   2) Uniform Static Air Pressure Test, Loading per FBC TAS 202–94
   3) Water Resistance Test, per FBC, TAS 202–94
   4) Large Missile Impact Test per FBC, TAS 201–94
   5) Cyclic Wind Pressure Loading per FBC, TAS 203–94
   6) Forced Entry Test, per ASTM F 588–04/ 07 and per FBC 2411 3.2.1, TAS 202–94
   7) Deglazing Force Test, per ASTM E 987–88(R2009) and per FBC 2411 3.2.1, TAS 202–94
   8) Operation Force Test, per ASTM D 2256–02(R2008) and per FBC 2411 3.2.1, TAS 202–94

   along with marked–up drawings and installation diagram of a horizontal sliding window, prepared by Fenestration Testing Laboratory, Inc., Test Report No. **FTL–5811**, dated 02/16/09, signed and sealed by Michael R. Wenzel, P.E.
   (Submitted under NOA No. 09–1008.06)
2. Test reports on:
   1) Air Infiltration Test, per FBC, TAS 202–94
   2) Uniform Static Air Pressure Test, Loading per FBC TAS 202–94
   3) Water Resistance Test, per FBC, TAS 202–94
   4) Large Missile Impact Test per FBC, TAS 201–94
   5) Cyclic Wind Pressure Loading per FBC, TAS 203–94
   6) Forced Entry Test, per ASTM F 588–04/ 07 and per FBC 2411 3.2.1, TAS 202–94
   7) Deglazing Force Test, per ASTM E 987–88(R2009) and per FBC 2411 3.2.1, TAS 202–94
   8) Operation Force Test, per ASTM D 2256–02(R2008) and per FBC 2411 3.2.1, TAS 202–94

   along with marked–up drawings and installation diagram of a horizontal sliding window, prepared by Fenestration Testing Laboratory, Inc., Test Reports No. **FTL–5338** and **FTL–5475**, dated 01/17/08 and 12/20/07 respectively, signed and sealed by Carlos S. Rionda, P. E.
   (Submitted under previous NOA No. 08–0527.13 and 07–0928.13)

Jaime D. Gascon, P. E.
Product Control Section Supervisor
NOA No. 14–0923.10
Expiration Date: November 06, 2018
Approval Date: February 05, 2015

B. TESTS (CONTINUED)

3. Test reports on:
   1) Air Infiltration Test, per FBC, TAS 202–94
   2) Uniform Static Air Pressure Test, Loading per FBC TAS 202–94
   3) Water Resistance Test, per FBC, TAS 202–94
   4) Large Missile Impact Test per FBC, TAS 201–94
   5) Cyclic Wind Pressure Loading per FBC, TAS 203–94
   6) Forced Entry Test, per AAMA 1302.5–76 and per FBC 2411 3.2.1, TAS 202–94
   7) Deglazing Force Test, per ASTM E 987–88 and per FBC 2411 3.2.1, TAS 202–94
   8) Operation Force Test, per ASTM D 2256–02 and per FBC 2411 3.2.1, TAS 202–94

   along with marked–up drawings and installation diagram of horizontal sliding window, prepared by Fenestration Testing Laboratory, Inc., Test Reports No. **FTL–3809** and **FTL–3804**, dated 06/16/03 and 05/15/03 respectively, revised & reissued on 08/10/06, all signed and sealed by Joseph C. Chan, P. E.
   (Submitted under NOA No. 03–0910.02)

C. CALCULATIONS

1. Anchor verification calculations and structural analysis, conformance to, complying with **FBC–2010** and with **FBC 5th Edition (2014)**, prepared by Al–Farooq Corporation, dated 09/09/14, signed and sealed by Javad Ahmad, P.E.
2. Glazing complies with **ASTM E1300–98/ 09**

D. QUALITY ASSURANCE

1. Miami–Dade Department of Regulatory and Economic Resources (RER)

E. MATERIAL CERTIFICATIONS

1. Notice of Acceptance No. **11–0624.02** issued to **E.I. DuPont DeNemours & Co., Inc.** for their **"DuPont Sentry Glass® Interlayer"** dated 05/26/10, expiring on 01/14/17.
2. Notice of Acceptance No. **13–0129.27** issued to **E.I. DuPont DeNemours & Co., Inc.** for their **"DuPont Butacite® PVB Interlayer"** dated 04/11/13, expiring on 12/11/16.

Jaime D. Gascon, P. E.
Product Control Section Supervisor
NOA No. 14–0923.10
Expiration Date: November 06, 2018
Approval Date: February 05, 2015

NOTICE OF ACCEPTANCE: EVIDENCE SUBMITTED

F. STATEMENTS

1. Statement letter of conformance to, complying with **FBC 5th Edition (2014)**, and of no financial interest, dated 09/10/14, signed and sealed by Javad Ahmad, P. E.
2. Statement letter of conformance, complying with **FBC–2010**, and of no financial interest, dated 12/08/11 and 06/05/13, signed and sealed by Javad Ahmad, P. E.
   (Submitted partially under previous NOA No. 12–0223.46)
3. Distributor Agreement, dated 10/20/10, signed by Carla Garcia Torrente and by Andres Chamorro.
   (Submitted partially under previous NOA No. 12–0223.46)
4. Laboratory compliance letter for Test Report No. **FTL–5811**, issued by Fenestration Testing Laboratory, Inc., dated 08/13/09, signed and sealed by Michael R. Wenzel, P. E.
   (Submitted under NOA No. 09–1008.06)
5. Proposal No. **09–1583** issued by Product Control, dated 11/23/09, signed by Jaime D. Gascon, P. E.
   (Submitted under NOA No. 09–1008.06)
6. Laboratory compliance letter for Test Reports No.'s **FTL–5338** and **FTL–5475**, issued by Fenestration Testing Laboratory, Inc., dated 01/17/08 and 12/20/07, signed and sealed by Carlos S. Rionda, P. E.
   (Submitted under NOA's No.'s 08–0527.13 and 07–0928.13)
7. Laboratory compliance letter for Test Reports No.'s **FTL–3809** and **FTL–3804**, issued by Fenestration Testing Laboratory, Inc., dated 06/16/03 and 05/15/03, revised & reissued by Fenestration Testing Laboratory dated 08/10/06, all signed and sealed by Joseph C. Chan, P. E.
   (Submitted under NOA No. 03–0910.02)

G. OTHERS

1. Notice of Acceptance No. **13–0617.28**, issued to ES Windows, LLC, for their Series "2000/ 2050" Aluminum Horizontal Sliding Window – L.M.I., approved on 09/19/13 and expiring on 11/06/18.

Jaime D. Gascon, P. E.
Product Control Section Supervisor
NOA No. 14–0923.10
Expiration Date: November 06, 2018
Approval Date: February 05, 2015

CMB

05-19-15

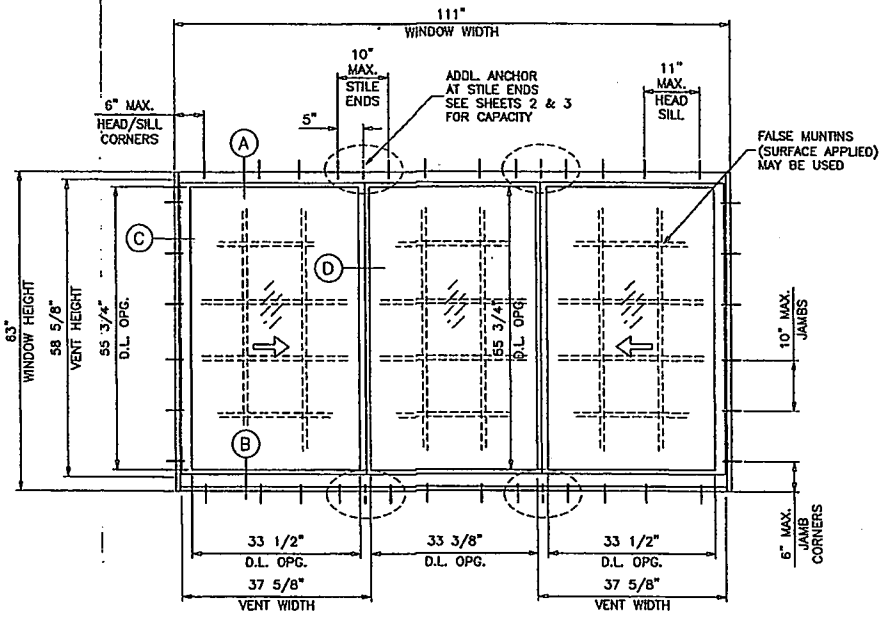

TYPICAL ELEVATION

THESE WINDOWS ARE RATED FOR LARGE & SMALL MISSILE IMPACT. SHUTTERS ARE NOT REQUIRED.

SERIES-2000/2050 ALUM HORIZ. SLIDING WINDOW

DESIGN LOAD RATINGS FOR THESE WINDOWS TO BE AS PER CHARTS SHOWN ON SHEETS 2 & 3.

APPROVAL APPLIES TO SINGLE UNITS OR SIDE BY SIDE COMBINATIONS OF H.R./H.R. OR H.R. WITH OTHER WINDOW TYPES IN MODULES OF TWO OR MORE WINDOWS USING MIAMI-DADE COUNTY APPROVED MULLIONS IN BETWEEN.
LOWER DESIGN PRESSURE FROM WINDOWS OR MULLION APPROVAL WILL APPLY TO ENTIRE SYSTEM.

THIS PRODUCT HAS BEEN DESIGNED AND TESTED TO COMPLY WITH THE REQUIREMENTS OF THE FLORIDA BUILDING CODE INCLUDING HIGH VELOCITY HURRICANE ZONE (HVHZ).

WOOD BUCKS BY OTHERS, MUST BE ANCHORED PROPERLY TO TRANSFER LOADS TO THE STRUCTURE.

ANCHORS SHALL BE AS LISTED, SPACED AS SHOWN ON DETAILS, ANCHORS EMBEDMENT TO BASE MATERIAL SHALL BE BEYOND WALL DRESSING OR STUCCO.

ANCHORING OR LOADING CONDITIONS NOT SHOWN IN THESE DETAILS ARE NOT PART OF THIS APPROVAL.

A LOAD DURATION INCREASE IS USED IN DESIGN OF ANCHORS INTO WOOD ONLY.

MATERIALS INCLUDING BUT NOT LIMITED TO STEEL/METAL SCREWS, THAT COME INTO CONTACT WITH OTHER DISSIMILAR MATERIALS SHALL MEET THE REQUIREMENTS OF THE FLORIDA BLDG. CODE.

LAMINATED GLASS
LARGE MISSILE IMPACT

PRODUCT REVISED
as complying with the Florida Building Code
Acceptance No 14-0923.10
Expiration Date 11/06/2018
By
Miami Dade Product Control

Engr: JAVAD AHMAD
CIVIL
FLA. PE # 70592
C.A.N. 3538
OCT 14 2014

AL-FAROOQ CORPORATION
ENGINEERS & PRODUCT DEVELOPMENT
1235 S.W. 87 AVE
MIAMI, FLORIDA 33174
TEL. (305) 264-8000 FAX. (305) 262-8978
COMP-ANL\W03-75ES

SERIES-2000/2050 ALUM HORIZ. SLIDING WDW. (L.M.I.)

E.S. WINDOWS, LLC
5220 N.W. 72 AVE. BAY #4
MIAMI, FL. 33166
TEL. (305) 624-7775 FAX. (305) 624-7777

(rev)	date	by	description
E	06.23.09		GENERAL REVISION
F	12.09.11		ALT. GLAZING OPTION ADDED
G	05.15.12		REV. PER PEDA COMMENTS
H	09.16.14		UPDATED TO 2014 FBC

revisions:

date: 08-27-03
scale: 1/2"=1'-0"
dr. by: HAMID
chk. by:

drawing no. W03-75

sheet 1 of 9

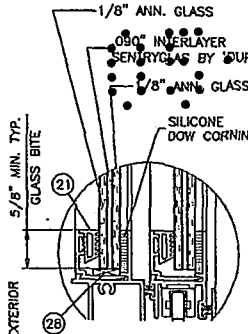

GLASS TYPE 'A'

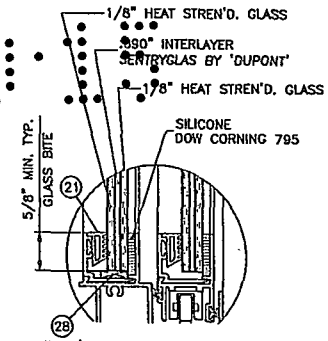

GLASS TYPE 'A1'

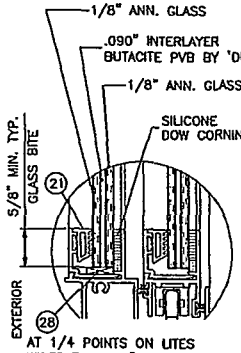

GLASS TYPE 'B'

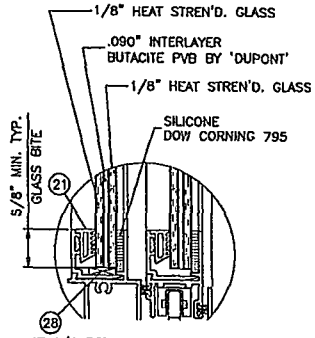

GLASS TYPE 'B1'

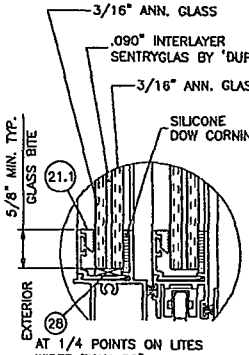

GLASS TYPE 'C'

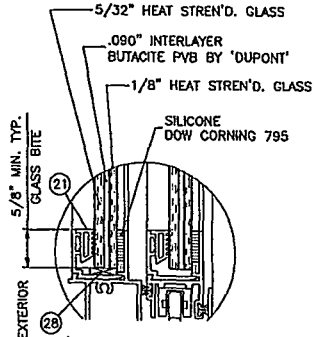

GLASS TYPE 'D'

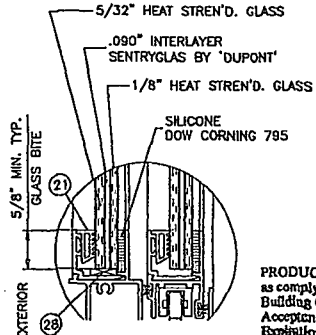

GLASS TYPE 'E'

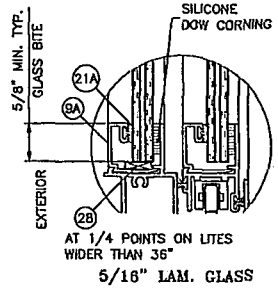

5/16" LAM. GLASS

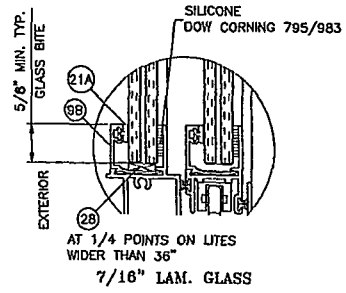

7/16" LAM. GLASS

ALT. GLAZING OPTIONS

SQUARE GLAZING STOP CAN BE USED WITH ALL GLASS TYPES SHOWN ON THIS SHEET.

PRODUCT REVISED
as complying with the Florida Building Code
Acceptance No 14-0923.10
Expiration Date 11/06/2018
By
Miami Dade Product Control

Engr: JAVAD AHMAD
CIVIL
FLA. PE # 70592
C.A.N. 3538

OCT 14 2014

AL-FAROOQ CORPORATION
ENGINEERS & PRODUCT DEVELOPMENT
12235 S.W. 87 AVE
MIAMI, FLORIDA 33174
TEL. (305) 264-8100 FAX. (305) 262-6978
COMP-ANL\W03-75ES

SERIES-2000/2050 ALUM HORIZ. SLIDING WDW. (L.M.L.)

E.S. WINDOWS, LLC
5220 N.W. 72 AVE. BAY #4
MIAMI, FL. 33166
TEL. (305) 624-7775 FAX. (305) 624-7777

revisions:

no	date	by	description
F	12.09.11		ALT. GLAZING OPTION ADDED
G	03.15.12		NO CHANGE THIS SHEET
H	09.16.14		UPDATED TO 2014 FBC

date: 08-27-03
scale: 1/2"=1'-0"
dr. by: HAMID
chk. by:

drawing no. W03-75

sheet 1.1 of 9

CMB

DESIGN LOAD CAPACITY – PSF (XO OR OX SIZES) SERIES 2000/2050

WINDOW DIMS.		A	STD. ANCHOR SPACING: STD. MTG. RAIL (FRAME SILL *1, 2, 3 & 4) SEE DETAILS BELOW FOR EXT(+) LOAD LIMITATIONS						STD. ANCHOR SPACING: H.D. MTG. RAIL (SILL *3 & 4)**		ADDL. ANCHOR: H.D. MTG. RAIL (SILL *3 & 4)**	
			GLASS TYPE 'A' GLASS TYPE 'B'		GLASS TYPE 'A1' GLASS TYPE 'B1' GLASS TYPE 'C'		GLASS TYPE 'D'		GLASS TYPE 'A1' GLASS TYPE 'B1' GLASS TYPE 'D' GLASS TYPE 'E'		GLASS TYPE 'A1' GLASS TYPE 'B1' GLASS TYPE 'D' GLASS TYPE 'E'	
WIDTH	HEIGHT		EXT.(+)	INT.(–)	EXT.(+)	INT.(–)	EXT.(+)	INT.(–)	EXT.(+)	INT.(–)	EXT.(+)	INT.(–)
26-1/2"	26" (3)	3	70.0	80.0	70.0	90.0	70.0	80.0	80.0	90.0	–	–
37"		4	70.0	80.0	70.0	90.0	70.0	80.0	80.0	90.0	–	–
53-1/8"		6	70.0	80.0	70.0	90.0	70.0	80.0	80.0	90.0	–	–
74"		8	70.0	80.0	70.0	90.0	70.0	80.0	80.0	90.0	–	–
26-1/2"	38-3/8" (3)	3	70.0	80.0	70.0	90.0	70.0	80.0	80.0	90.0	–	–
37"		4	70.0	80.0	70.0	90.0	70.0	80.0	80.0	90.0	–	–
53-1/8"		6	70.0	80.0	70.0	90.0	70.0	80.0	80.0	90.0	–	–
74"		8	70.0	80.0	70.0	90.0	70.0	80.0	80.0	90.0	–	–
26-1/2"	50-5/8" (4)	3	70.0	80.0	70.0	90.0	70.0	80.0	80.0	90.0	–	–
37"		4	70.0	80.0	70.0	90.0	70.0	80.0	80.0	90.0	–	–
53-1/8"		6	70.0	80.0	70.0	90.0	70.0	80.0	80.0	90.0	–	–
74"		8	–	–	70.0	90.0	70.0	80.0	80.0	90.0	–	–
26-1/2"	63" (5)	3	70.0	80.0	70.0	90.0	70.0	80.0	80.0	90.0	–	–
37"		4	58.9	67.3	70.0	90.0	70.0	80.0	80.0	90.0	–	–
53-1/8"		6	42.6	48.7	70.0	86.6	70.0	80.0	80.0	90.0	–	–
74"		8	–	–	–	–	–	–	75.3	75.3	80.0	90.0
24"	24" (2)	3	70.0	80.0	70.0	90.0	70.0	80.0	80.0	90.0	–	–
36"		4	70.0	80.0	70.0	90.0	70.0	80.0	80.0	90.0	–	–
48"		6	70.0	80.0	70.0	90.0	70.0	80.0	80.0	90.0	–	–
60"		6	70.0	80.0	70.0	90.0	70.0	80.0	80.0	90.0	–	–
72"		8	70.0	80.0	70.0	90.0	70.0	80.0	80.0	90.0	–	–
24"	36" (3)	3	70.0	80.0	70.0	90.0	70.0	80.0	80.0	90.0	–	–
36"		4	70.0	80.0	70.0	90.0	70.0	80.0	80.0	90.0	–	–
48"		6	70.0	80.0	70.0	90.0	70.0	80.0	80.0	90.0	–	–
60"		6	70.0	80.0	70.0	90.0	70.0	80.0	80.0	90.0	–	–
72"		8	70.0	80.0	70.0	90.0	70.0	80.0	80.0	90.0	–	–
24"	48" (4)	3	70.0	80.0	70.0	90.0	70.0	80.0	80.0	90.0	–	–
36"		4	70.0	80.0	70.0	90.0	70.0	80.0	80.0	90.0	–	–
48"		6	70.0	80.0	70.0	90.0	70.0	80.0	80.0	90.0	–	–
60"		6	70.0	80.0	70.0	90.0	70.0	80.0	80.0	90.0	–	–
72"		8	70.0	80.0	70.0	90.0	70.0	80.0	80.0	90.0	–	–
24"	60" (5)	3	70.0	80.0	70.0	90.0	70.0	80.0	80.0	90.0	–	–
36"		4	70.0	80.0	70.0	90.0	70.0	80.0	80.0	90.0	–	–
48"		6	54.2	61.9	70.0	90.0	70.0	80.0	80.0	90.0	–	–
60"		6	45.1	51.5	70.0	87.3	70.0	80.0	80.0	90.0	–	–
72"		8	–	–	70.0	78.7	70.0	78.7	80.0	82.7	80.0	90.0

A = NO. OF ANCHORS PER HEAD & SILL
( ) = NO. OF ANCHORS PER JAMB

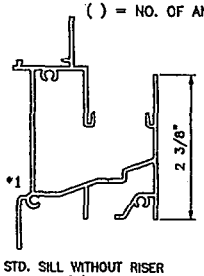

STD. SILL WITHOUT RISER
LIMIT EXT.(+) LOADS TO 53.3 PSF

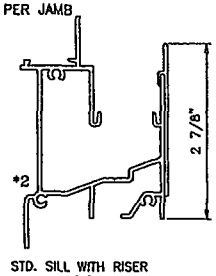

STD. SILL WITH RISER
LIMIT EXT.(+) LOADS TO 70.0 PSF

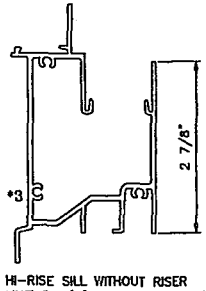

HI-RISE SILL WITHOUT RISER
LIMIT EXT.(+) LOADS TO 67.5 PSF

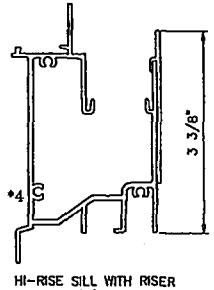

HI-RISE SILL WITH RISER
LIMIT EXT.(+) LOADS TO 80.0 PSF

** SEE DETAILS BELOW FOR EXT(+) LOAD LIMITATIONS

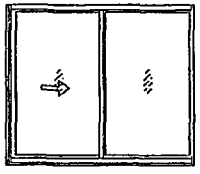

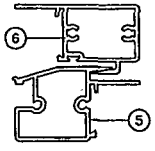

STD. MTG. RAILS
S-2000

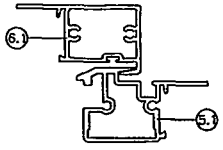

STD. MTG. RAILS
S-2050

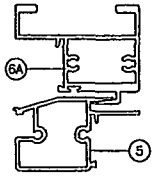

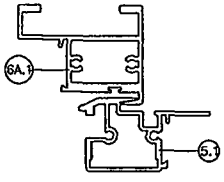

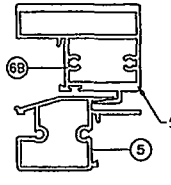

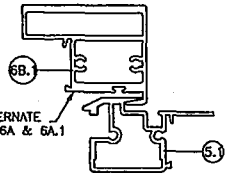

ALTERNATE TO 6A & 6A.1

H.D. MTG. RAILS
S-2000

H.D. MTG. RAILS
S-2050

PRODUCT REVISED
as complying with the Florida
Building Code
Acceptance No 14-0923.10
Expiration Date 14/06/2018
By
Miami Dade Product Control

NOTE:
GLASS CAPACITIES ON THIS SHEET ARE BASED ON ASTM E1300-09 (3 SEC. GUSTS) AND FLORIDA BUILDING COMMISSION DECLARATORY STATEMENT DCA05-DEC-219

Engr: JAVAD AHMAD
CIVIL
FLA. PE # 70592
C.A.N. 3538
OCT 14 2014

AL-FAROOQ CORPORATION
ENGINEERS & PRODUCT DEVELOPMENT
1235 S.W. 87 AVE
MIAMI, FLORIDA 33174
TEL. (305) 264-8100 FAX. (305) 262-6978
COMP-ANL W03-75ES

SERIES-2000/2050 ALUM HORIZ. SLIDING WDW. (L.M.I.)

E.S. WINDOWS, LLC
5220 N.W. 72 AVE. BAY #4
MIAMI, FL. 33166
TEL. (305) 624-7775 FAX. (305) 624-7777

revisions:

no	date	by	description
E	06.25.09		GENERAL REVISION
F	12.09.11		NO CHANGE THIS SHEET
G	03.15.12		REV. PER PERA COMMENTS
H	09.16.14		UPDATED TO 2014 FBC

date: 08-27-03
scale: 1/2"=1'-0"
dr. by: HAMID
chk. by:

drawing no.
W03-75

sheet 2 of 9

DESIGN LOAD CAPACITY – PSF (XOX SIZES) SERIES 2000/2050

WINDOW DIMS. WIDTH	WINDOW DIMS. HEIGHT	A	STD. ANCHOR SPACING: STD. MTG. RAIL (FRAME SILL #1, 2, 3 & 4) SEE DETAILS BELOW FOR EXT(+) LOAD LIMITATIONS: GLASS TYPE 'A' GLASS TYPE 'B' EXT.(+)	GLASS TYPE 'A' GLASS TYPE 'B' INT.(–)	GLASS TYPE 'A1' GLASS TYPE 'B1' GLASS TYPE 'C' EXT.(+)	GLASS TYPE 'A1' GLASS TYPE 'B1' GLASS TYPE 'C' INT.(–)	GLASS TYPE 'D' EXT.(+)	GLASS TYPE 'D' INT.(–)	H.D. MTG. RAIL (SILL #3 & 4)** GLASS TYPE 'A1' GLASS TYPE 'B1' GLASS TYPE 'D' GLASS TYPE 'E' EXT.(+)	H.D. MTG. RAIL (SILL #3 & 4)** GLASS TYPE 'A1' GLASS TYPE 'B1' GLASS TYPE 'D' GLASS TYPE 'E' INT.(–)	ADDL. ANCHOR: H.D. MTG. RAIL (SILL #3 & 4)** GLASS TYPE 'A1' GLASS TYPE 'B1' GLASS TYPE 'D' GLASS TYPE 'E' EXT.(+)	ADDL. ANCHOR: H.D. MTG. RAIL (SILL #3 & 4)** GLASS TYPE 'A1' GLASS TYPE 'B1' GLASS TYPE 'D' GLASS TYPE 'E' INT.(–)
74"	26" (3)	9	70.0	80.0	70.0	90.0	70.0	80.0	80.0	90.0	–	–
106-1/4"		12	70.0	80.0	70.0	90.0	70.0	80.0	80.0	90.0	–	–
111"		12	–	–	–	–	–	–	80.0	90.0	–	–
74"	38-3/8" (3)	9	70.0	80.0	70.0	90.0	70.0	80.0	80.0	90.0	–	–
106-1/4"		12	70.0	80.0	70.0	90.0	70.0	80.0	80.0	90.0	–	–
111"		12	–	–	–	–	–	–	80.0	90.0	–	–
74"	50-5/8" (4)	9	70.0	80.0	70.0	90.0	70.0	80.0	80.0	90.0	–	–
106-1/4"		12	70.0	80.0	70.0	90.0	70.0	80.0	80.0	90.0	–	–
111"		12	–	–	–	–	–	–	80.0	90.0	–	–
74"	63" (5)	9	45.4	51.9	70.0	90.0	70.0	80.0	80.0	90.0	–	–
106-1/4"		12	–	–	–	–	–	–	77.1	77.1	80.0	90.0
111"		12	–	–	–	–	–	–	75.3	75.3	80.0	90.0
72"	24" (2)	9	70.0	80.0	70.0	90.0	70.0	80.0	80.0	90.0	–	–
84"		9	70.0	80.0	70.0	90.0	70.0	80.0	80.0	90.0	–	–
96"		9	70.0	80.0	70.0	90.0	70.0	80.0	80.0	90.0	–	–
108"		12	70.0	80.0	70.0	90.0	70.0	80.0	80.0	90.0	–	–
72"	36" (3)	9	70.0	80.0	70.0	90.0	70.0	80.0	80.0	90.0	–	–
84"		9	70.0	80.0	70.0	90.0	70.0	80.0	80.0	90.0	–	–
96"		9	70.0	80.0	70.0	90.0	70.0	80.0	80.0	90.0	–	–
108"		12	70.0	80.0	70.0	90.0	70.0	80.0	80.0	90.0	–	–
72"	48" (4)	9	70.0	80.0	70.0	90.0	70.0	80.0	80.0	90.0	–	–
84"		9	70.0	80.0	70.0	90.0	70.0	80.0	80.0	90.0	–	–
96"		9	70.0	80.0	70.0	90.0	70.0	80.0	80.0	90.0	–	–
108"		12	70.0	80.0	70.0	90.0	70.0	80.0	80.0	90.0	–	–
72"	60" (5)	9	54.2	61.9	70.0	90.0	70.0	80.0	80.0	90.0	–	–
84"		9	47.6	54.4	70.0	90.0	70.0	80.0	80.0	90.0	–	–
96"		9	–	–	70.0	83.9	70.0	80.0	80.0	88.2	80.0	90.0
108"		12	–	–	70.0	78.7	70.0	78.7	80.0	82.7	80.0	90.0

A = NO. OF ANCHORS PER HEAD & SILL
( ) = NO. OF ANCHORS PER JAMB

** SEE DETAILS BELOW FOR EXT(+) LOAD LIMITATIONS

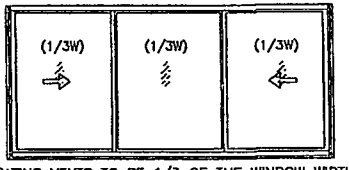

OPERATING VENTS TO BE 1/3 OF THE WINDOW WIDTH

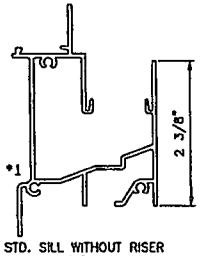

STD. SILL WITHOUT RISER
LIMIT EXT.(+) LOADS TO 53.3 PSF

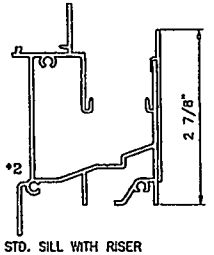

STD. SILL WITH RISER
LIMIT EXT.(+) LOADS TO 70.0 PSF

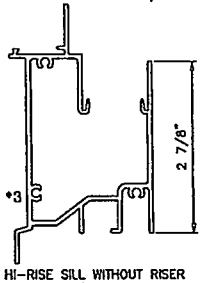

HI-RISE SILL WITHOUT RISER
LIMIT EXT.(+) LOADS TO 66.7 PSF

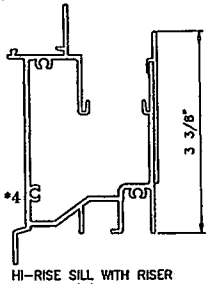

HI-RISE SILL WITH RISER
LIMIT EXT.(+) LOADS TO 80.0 PSF

DESIGN LOAD CAPACITY – PSF (XOX SIZES) SERIES 2000/2050

WINDOW DIMS. WIDTH	WINDOW DIMS. HEIGHT	A	STD. ANCHOR SPACING: STD. MTG. RAIL (FRAME SILL #1, 2, 3 & 4) SEE DETAILS BELOW FOR EXT(+) LOAD LIMITATIONS: GLASS TYPE 'A' GLASS TYPE 'B' EXT.(+)	GLASS TYPE 'A' GLASS TYPE 'B' INT.(–)	GLASS TYPE 'A1' GLASS TYPE 'B1' GLASS TYPE 'C' EXT.(+)	GLASS TYPE 'A1' GLASS TYPE 'B1' GLASS TYPE 'C' INT.(–)	GLASS TYPE 'D' EXT.(+)	GLASS TYPE 'D' INT.(–)	H.D. MTG. RAIL (SILL #3 & 4)** GLASS TYPE 'A1' GLASS TYPE 'B1' GLASS TYPE 'D' GLASS TYPE 'E' EXT.(+)	H.D. MTG. RAIL (SILL #3 & 4)** GLASS TYPE 'A1' GLASS TYPE 'B1' GLASS TYPE 'D' GLASS TYPE 'E' INT.(–)
74"	26" (3)	8	70.0	80.0	70.0	90.0	70.0	80.0	80.0	90.0
106-1/4"		11	70.0	80.0	70.0	90.0	70.0	80.0	80.0	90.0
111"		12	–	–	–	–	–	–	80.0	90.0
74"	38-3/8" (3)	8	70.0	80.0	70.0	90.0	70.0	80.0	80.0	90.0
106-1/4"		11	–	–	70.0	90.0	70.0	80.0	80.0	90.0
111"		12	–	–	–	–	–	–	80.0	90.0
74"	50-5/8" (4)	8	–	–	70.0	90.0	70.0	80.0	80.0	90.0
74"	63" (5)	8	–	–	–	–	–	–	80.0	90.0
72"	24" (2)	8	70.0	80.0	70.0	90.0	70.0	80.0	80.0	90.0
84"		8	70.0	80.0	70.0	90.0	70.0	80.0	80.0	90.0
96"		9	70.0	80.0	70.0	90.0	70.0	80.0	80.0	90.0
108"		11	70.0	80.0	70.0	90.0	70.0	80.0	80.0	90.0
72"	36" (3)	8	70.0	80.0	70.0	90.0	70.0	80.0	80.0	90.0
84"		8	70.0	80.0	70.0	90.0	70.0	80.0	80.0	90.0
96"		9	70.0	80.0	70.0	90.0	70.0	80.0	80.0	90.0
108"		11	–	–	70.0	90.0	70.0	80.0	80.0	90.0
72"	48" (4)	8	70.0	80.0	70.0	90.0	70.0	80.0	80.0	90.0
84"		8	–	–	70.0	90.0	70.0	80.0	80.0	90.0
96"		9	–	–	–	–	–	–	80.0	90.0
72"	60" (5)	8	–	–	70.0	90.0	70.0	80.0	80.0	90.0

A = NO. OF ANCHORS PER HEAD & SILL
( ) = NO. OF ANCHORS PER JAMB

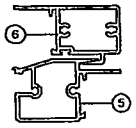

STD. MTG. RAILS
S-2000

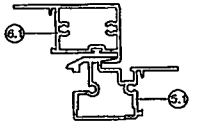

STD. MTG. RAILS
S-2050

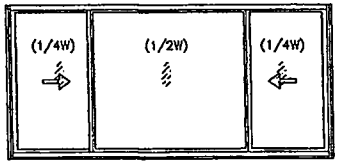

OPERATING VENTS TO BE 1/4 OF THE WINDOW WIDTH

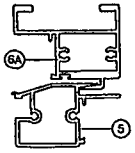

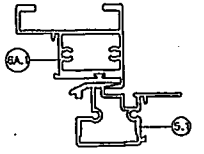

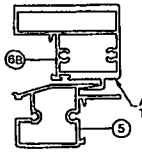

H.D. MTG. RAILS
S-2000

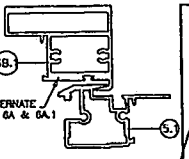

H.D. MTG. RAILS
S-2050

PRODUCT REVISED
as complying with the Florida
Building Code
Acceptance No. 14-0923.10
Expiration Date 11/06/2018
By
Miami-Dade Product Control

NOTE:
GLASS CAPACITIES ON THIS SHEET ARE BASED ON ASTM E1300-09 (3 SEC. GUSTS) AND FLORIDA BUILDING COMMISSION DECLARATORY STATEMENT DCA05-DEC-219

Engr: JAVAD AHMAD
CIVIL
FLA. PE # 70592
C.A.N. 3538

OCT 14 2014

AL-FAROOQ CORPORATION
ENGINEERS & PRODUCT DEVELOPMENT
1235 S.W. 87 AVE
MIAMI, FLORIDA 33174
TEL. (305) 264-8100 FAX. (305) 262-6978
COMP-ANL\W03-75ES

SERIES-2000/2050 ALUM HORIZ. SLIDING WDW. (L.M.I.)

E.S. WINDOWS, LLC
5220 N.W. 72 AVE. BAY #4
MIAMI, FL. 33166
TEL. (305) 624-7775 FAX. (305) 624-7777

revisions: no	date	by	description
E	06.25.09		GENERAL REVISION
F	12.09.11		NO CHANGE THIS SHEET
G	05.15.12		REV. PER PERA COMMENTS
H	09.16.14		UPDATED TO 2014 FBC

date: 08-27-03
scale: 1/2"=1'-0"
dr. by: HAMID
chk. by:

drawing no. W03-75

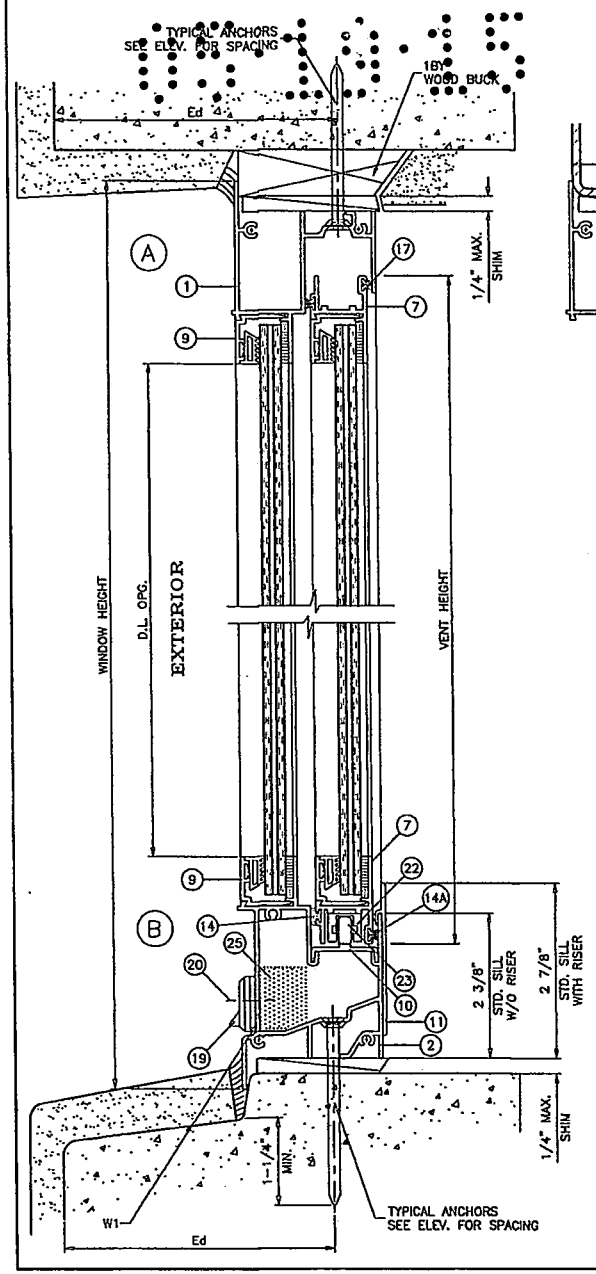

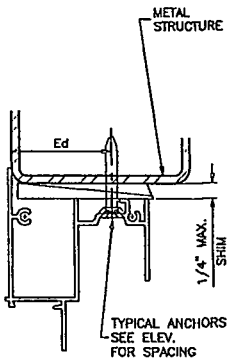

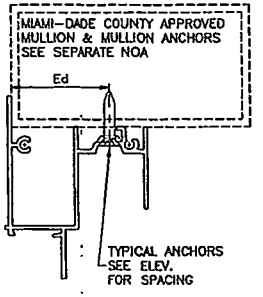

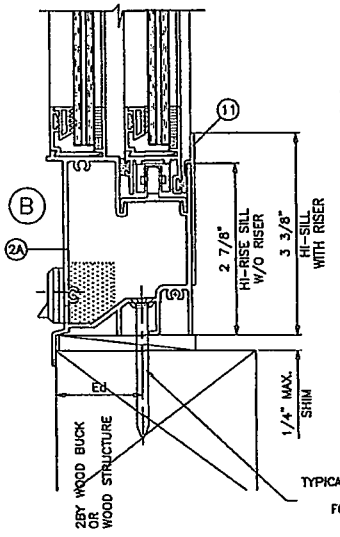

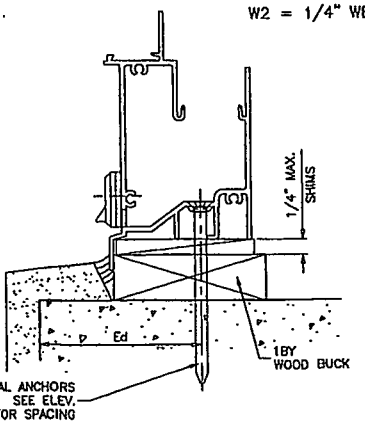

WOOD BUCKS AND METAL STRUCTURE NOT BY E.S. WINDOWS MUST SUSTAIN LOADS IMPOSED BY GLAZING SYSTEM AND TRANSFER THEM TO THE BUILDING STRUCTURE.

TYPICAL ANCHORS: SEE ELEV. FOR SPACING

1/4" DIA. ULTRACON BY 'ELCO' (Fu=177 KSI, Fy=155 KSI)

INTO 2BY WOOD BUCKS OR WOOD STRUCTURES
1-1/2" MIN. PENETRATION INTO WOOD

THRU 1BY BUCKS INTO CONC. OR MASONRY
1-1/4" MIN. EMBED INTO CONC. OR MASONRY

DIRECTLY INTO CONC. OR MASONRY
1-1/4" MIN. EMBED INTO CONC. OR MASONRY

#14 SMS OR SELF DRILLING SCREWS (GRADE 2 CRS)

INTO MIAMI-DADE COUNTY APPROVED MULLIONS (MIN. THK. = 1/8")

INTO METAL STRUCTURES
STEEL : 1/8" THK. MIN. (Fy = 36 KSI MIN.)
ALUMINUM : 1/8" THK. MIN. (6063-T5 MIN.)
(STEEL IN CONTACT WITH ALUMINUM TO BE PLATED OR PAINTED)

Ed = ANCHOR EDGE DISTANCE

INTO CONCRETE AND MASONRY = 2-1/2" MIN.
INTO WOOD STRUCTURE = 1" MIN.
INTO METAL STRUCTURE = 3/4" MIN.

WOOD AT HEAD, SILL OR JAMBS SG = 0.55 MIN.
CONCRETE AT HEAD, SILL OR JAMBS f'c = 3000 PSI MIN.
C-90 HOLLOW/FILLED BLOCK AT JAMBS f'm = 2000 PSI MIN.

SEALANTS:

FRAME AND VENT CORNERS AND INSTALLATION SCREWS AT SILL SEALED WITH WHITE/ALUMINUM COLORED SILICONE.

WEEPHOLES:

W1 = 1-13/16" X 1/4" WEEPHOLES AT 3" FROM EACH END WITH PLASTIC BAFFLE
W2 = 1/4" WEEPHOLE AT TOP & BOTTOM RAIL 1" FROM EACH END

PRODUCT REVISED
as complying with the Florida Building Code
Acceptance No 14-0923.10
Expiration Date 11/06/2018
By
Miami Dade Product Control

SERIES-2000
SERIES-2050

Engr: JAVAD AHMAD
CML
FLA. PE # 70592
C.A.N. 3538

OCT 14 2014

AL-FAROOQ CORPORATION
ENGINEERS & PRODUCT DEVELOPMENT
12295 S.W. 87 AVE
MIAMI, FLORIDA 33174
TEL. (305) 264-8100 FAX. (305) 262-6978
COMP-ANL\W03-75ES

SERIES-2000/2050 ALUM. HORIZ. SLIDING WDW. (L.M.L.)

E.S. WINDOWS, LLC
5220 N.W. 72 AVE. BAY #4
MIAMI, FL. 33166
TEL. (305) 624-7775 FAX. (305) 624-7777

revisions:			
no	date	by	description
E	06.23.09		GENERAL REVISION
F	12.09.11		NO CHANGE THIS SHEET
G	05.15.12		REV. PER PERA COMMENTS
H	09.18.14		UPDATED TO 2014 FBC

date: 08-27-03
scale: 1/2" = 1"
dr. by: HAMID
chk. by:

drawing no. W03-75

sheet 4 of 9

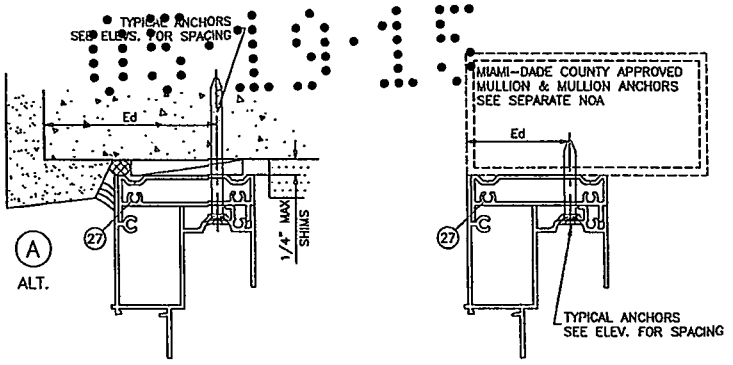

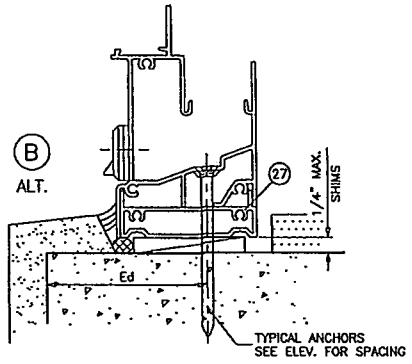

ITEM	PART #	QUANTITY	DESCRIPTION	MATERIAL	MANF./SUPPLIER/REMARKS
1	ES1003	1	FRAME HEAD	6063-T6	–
2	ES2001	1	STD. FRAME SILL	6063-T6	–
2A	ES2012	1	HI-RISE FRAME SILL	6063-T6	–
3	ES2003	1	FRAME JAMB	6063-T6	–
5	ES1005	1/ VENT	FIXED RAIL (S-2000)	6063-T6	–
5.1	ES1051	1/ VENT	FIXED RAIL (S-2050)	6063-T6	–
6	ES1004	1/ VENT	STD. VENT MEETING RAIL (S-2000)	6063-T6	–
6A	ES2004	1/ VENT	H.D. VENT MEETING RAIL (S-2000)	6063-T6	–
6.1	ES1052	1/ VENT	STD. VENT MEETING RAIL (S-2050)	6063-T6	–
6A.1	ES1053	1/ VENT	H.D. VENT MEETING RAIL (S-2050)	6063-T6	–
6B	ES-2004A	1/ VENT	H.D. VENT MEETING RAIL (S-2050)	6063-T6	ALTERNATE TO 6A
6B.1	ES-1053A	1/ VENT	H.D. VENT MEETING RAIL (S-2050)	6063-T6	ALTERNATE TO 6A.1
7	ES1007	2/ VENT	TOP AND BOTTOM RAIL	6063-T5	–
8	ES1006	1/ VENT	JAMB STILE	6063-T5	–
9	ES1008	AS REQD.	GLAZING BEAD	6063-T5	–
9A	ES1103	AS REQD.	SQUARE GLAZING BEAD (5/16" GLASS)	6063-T5	–
9B	ES1017	AS REQD.	SQUARE GLAZING BEAD (7/16" GLASS)	6063-T5	–
10	ES2002	1	SILL TRACK INSERT	6063-T5	–
11	ES2011	AS REQD.	STD. SILL RISER	6063-T5	–
12	ES1009	2/ VENT	SPRING LOADED VENT LATCH	6063-T6	AT 8" FROM ENDS
12A	SL203	2/ VENT	SWEEP LATCH	ZAMAK	AT 11" FROM ENDS, BY INTERLOCK
12B	#8 X 1"	2/ LATCH	LATCH INSTALLATION SCREWS	GRADE 2 CRS	FH SMS
13	ES1012	1/ LATCH	VENT LATCH SPRING	ST. STEEL	–
14	C1B251N	AS REQD.	FOAM FILLED FABRIC W'STRIPPING	–	SCHLEGEL
15	#8 X 1"	AS REQD.	FRAME/VENT ASSEMBLY SCREWS	CRS	P.H. SMS
16	#8 X 3"	2/ VENT	FIX. RAIL SILL SCREWS (STD. SILL END)	CRS	P.H. SMS
16A	#10 X 4"	2/ VENT	FIX. RAIL SILL SCREWS (HI-RISE SILL END)	CRS	P.H. SMS
17	W23211NG	AS REQD.	VENT & FIX. RAIL W'STRIPPING	–	ULTRAFAB
18	W23291NG	AS REQD.	FRAME JAMB W'STRIPPING	–	ULTRAFAB
19	WPHL-100	2	BAFFLE, AT 3" FROM EACH END	–	M & M PLASTICS
20	#6 X 1/2"	2/ BAFFLE	BAFFLE SCREW	–	F.H. SMS
21	ES1010	AS REQD.	GLAZING WEDGE	SOFT PVC	DUROMETER 70 SHORE 'A'
21.1	ES4013	AS REQD.	GLAZING WEDGE	SOFT PVC	DUROMETER 70 SHORE 'A'
21A	27-425	AS REQD.	GLAZING GASKET	EPDM	DUROMETER 60 SHORE 'A'
22	ES2007	4/ VENT	ROLLER HOUSING & GUIDE	PLASTIC	–
23	ES2006	2/ VENT	ROLLER	BRASS/ST. ST.	–
24	ES2005	2/ VENT	ROLLER PIN	ST. STEEL	–
25	–	1/ WEEP	OPEN CELL FOAM PAD	–	1" X 3/4" X 1" LONG
26	–	1/ VENT	5/16" BOX SCREEN	–	OPTIONAL
27	ES1505	–	FLUSH FRAME ADAPTER	6063-T5	OPTIONAL
28	27-372	2/ LITE	SETTING BLOCK, 7/16" X 3/16" X 3-1/2" LONG	EPDM	DUROMETER 75±5 SHORE A

PRODUCT REVISED
as complying with the Florida
Building Code
Acceptance No. 14-0923.10
Expiration Date 11/06/2018
By
Miami Dade Product Control

Engr: JAVAD AHMAD
CIVIL
FLA. PE # 70592
O.A.N. 3538

OCT 14 2014

AL-FAROOQ CORPORATION
ENGINEERS & PRODUCT DEVELOPMENT
1235 S.W. 87 AVE
MIAMI, FLORIDA 33174
TEL. (305) 264-8100 FAX. (305) 262-6978
COMP-ANL\W03-75ES

SERIES-2000/2050 ALUM HORIZ. SLIDING WDW. (L.M.I.)

E.S. WINDOWS, LLC
5220 N.W. 72 AVE. BAY #4
MIAMI, FL. 33166
TEL. (305) 624-7775 FAX. (305) 624-7777

revisions:			
no	date	by	description
E	08.25.09		GENERAL REVISION
F	12.09.11		ALT. GLAZING OPTION ADDED
G	05.15.12		REV. PER PBDA COMMENTS
H	09.16.14		UPDATED TO 2014 FBC

date: 08-27-03
scale: 1/2" = 1"
dr. by: HAMID
chk. by:

drawing no.
W03-75

sheet 5 of 9

CMB

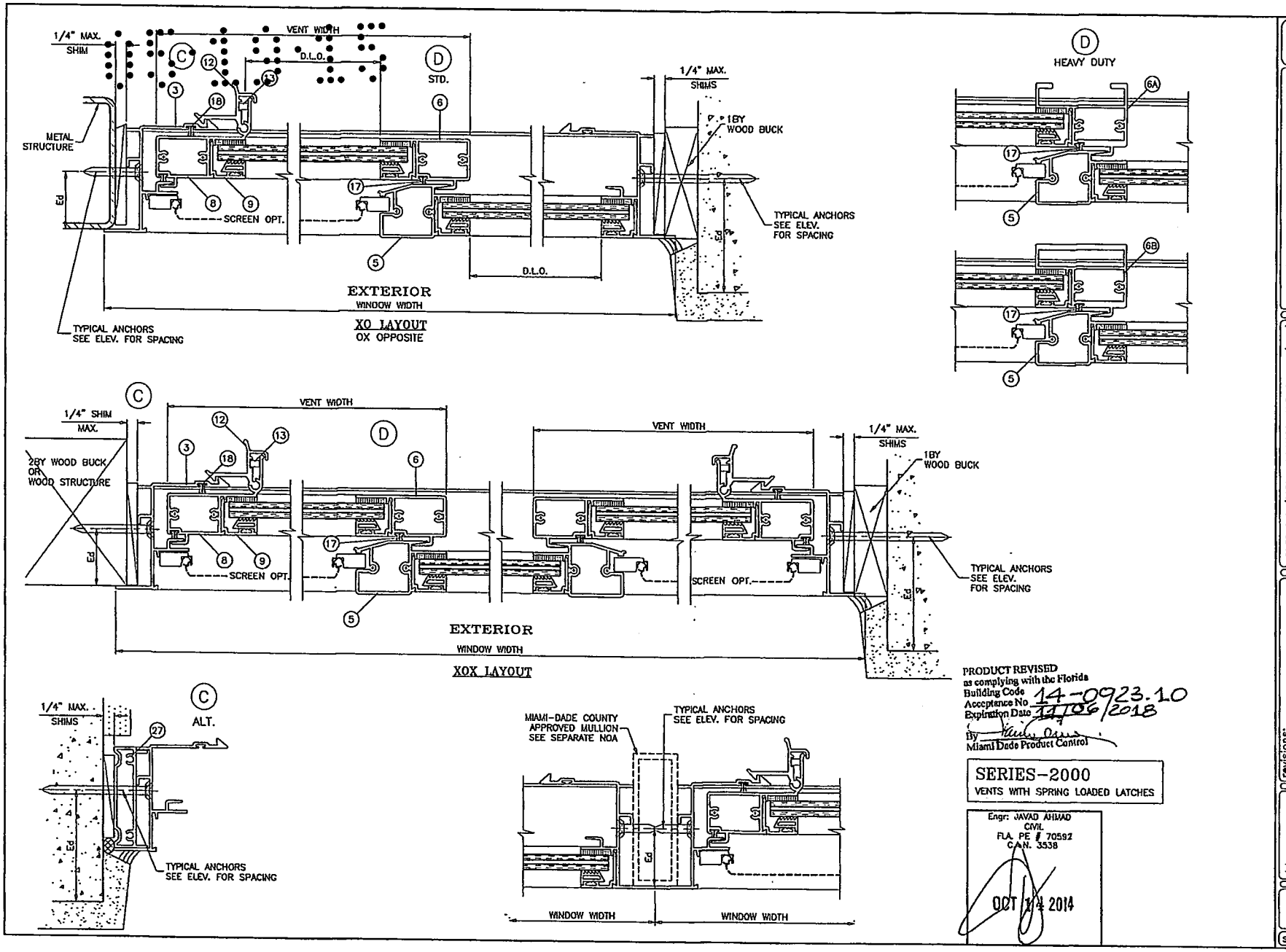

PRODUCT REVISED
as complying with the Florida
Building Code
Acceptance No 14-0923.10
Expiration Date 11/06/2018
By
Miami Dade Product Control

SERIES-2000
VENTS WITH SPRING LOADED LATCHES

Engr: JAVAD AHMAD
CIVIL
FLA. PE # 70592
C.A.N. 3538

OCT 14 2014

AL-FAROOQ CORPORATION
ENGINEERS & PRODUCT DEVELOPMENT
1235 S.W. 87 AVE
MIAMI, FLORIDA 33174
TEL. (305) 264-8100 FAX. (305) 262-6978
COMP-ANL\W03-75ES

SERIES-2000/2050 ALUM HORIZ. SLIDING WDW. (L.M.I.)

E.S. WINDOWS, LLC
5220 N.W. 72 AVE. BAY #4
MIAMI, FL. 33166
TEL. (305) 624-7775 FAX. (305) 624-7777

revisions:			
no	date	by	description
E	08.25.09		GENERAL REVISION
F	12.09.11		NO CHANGE THIS SHEET
G	05.15.12		REV. PER PERA COMMENTS
H	09.16.14		UPDATED TO 2014 FBC

date: 08-27-03
scale: 1/2" = 1"
dr. by: HAMID
chk. by:

drawing no.
W03-75

sheet 6 of 9

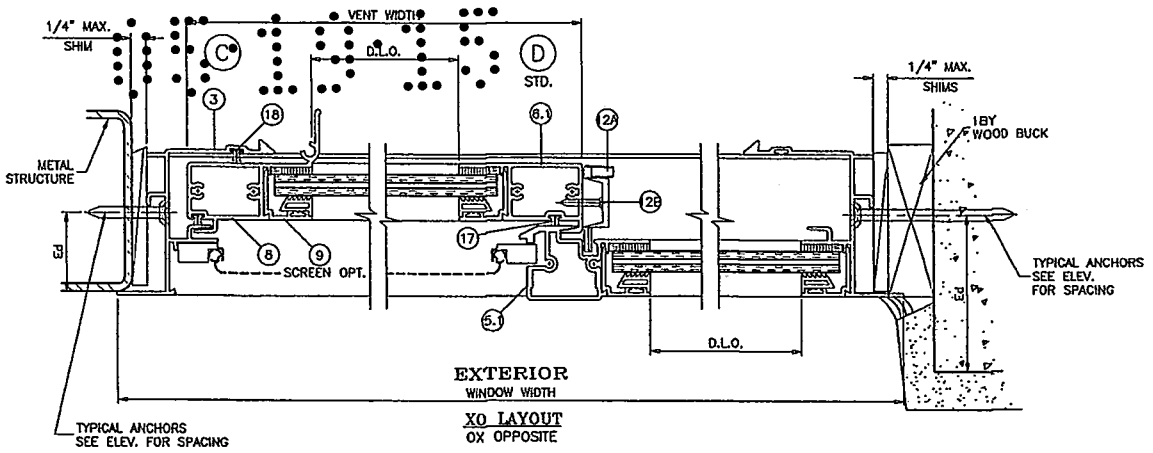

XO LAYOUT
OX OPPOSITE

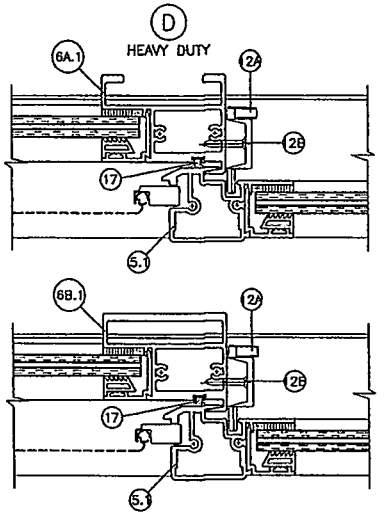

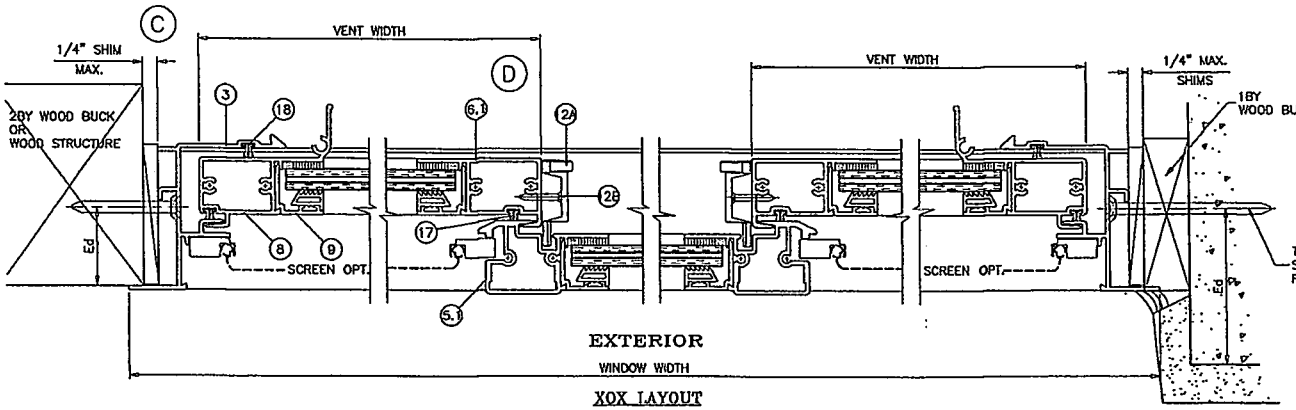

XOX LAYOUT

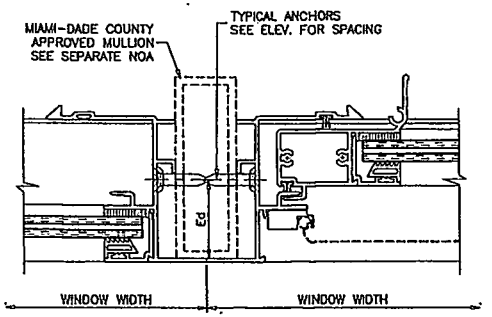

PRODUCT REVISED
as complying with the Florida
Building Code 14-0923.10
Acceptance No
Expiration Date 11/06/2018
By
Miami Dade Product Control

SERIES-2050
VENTS WITH SWEEP LATCHES

Engr: JAVAD AHMAD
CIVIL
FLA. PE # 70592
C.A.N. 3538
OCT 14 2014

AL-FAROOQ CORPORATION
ENGINEERS & PRODUCT DEVELOPMENT
12235 S.W. 87 AVE
MIAMI, FLORIDA 33174
TEL. (305) 264-8100 FAX. (305) 262-6978
COMP-ANL\W03-75ES

SERIES-2000/2050 ALUM HORIZ. SLIDING WDW. (L.M.I.)

E.S. WINDOWS, LLC
5220 N.W. 72 AVE. BAY #4
MIAMI, FL. 33166
TEL. (305) 624-7775 FAX. (305) 624-7777

revisions:			
no	date	by	description
E	06.25.09		GENERAL REVISION
F	12.09.11		NO CHANGE THIS SHEET
G	05.15.12		REV. PER PDRA COMMENTS
H	09.16.14		UPDATED TO 2014 FBC

date: 08-27-03
scale: 1/2" = 1"
dr. by: HAMID
chk. by:

drawing no.
W03-75

sheet 7 of 9

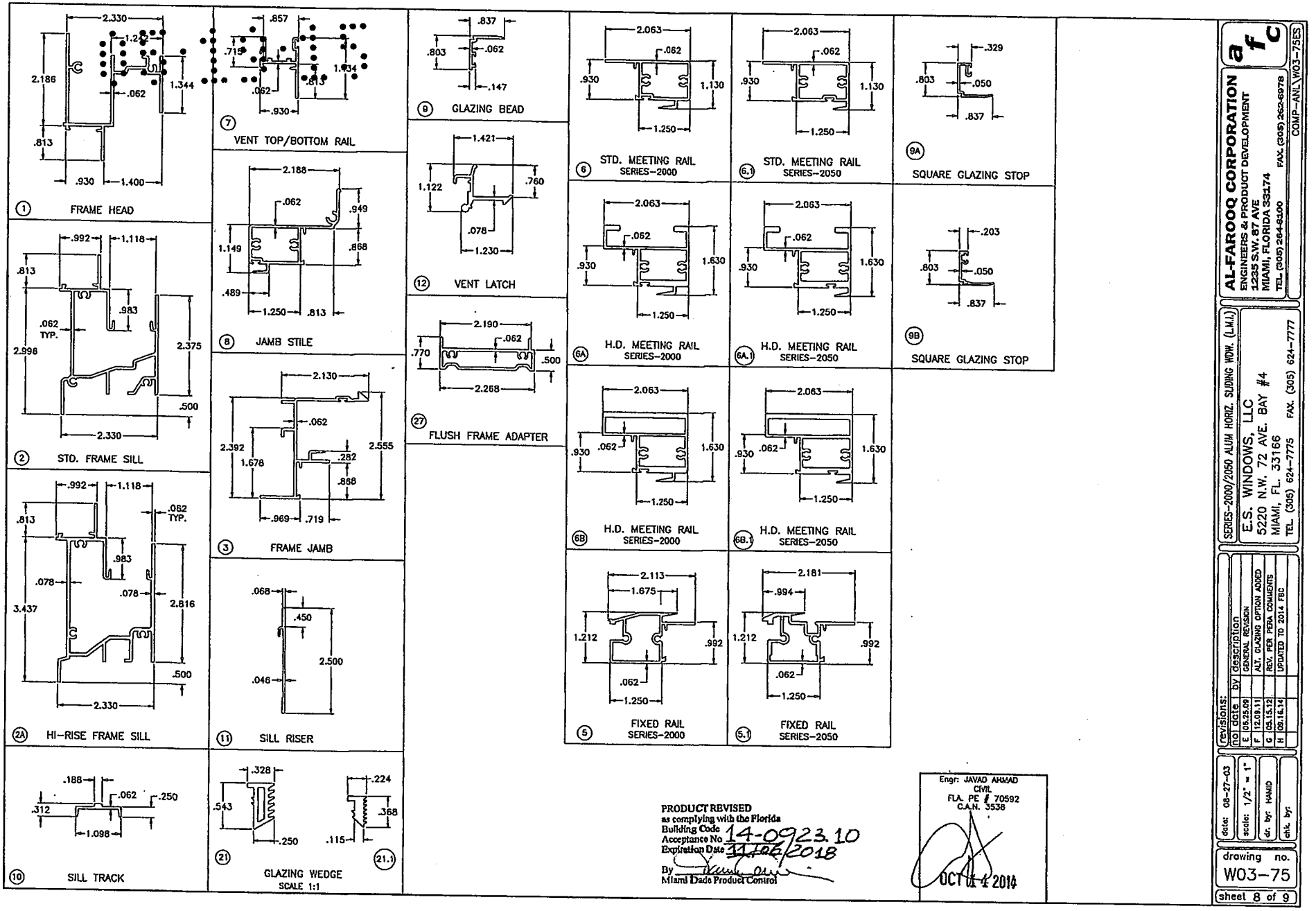
1 FRAME HEAD
2.330
1.224
2.186
1.344
.062
.813
.930
1.400
7 VENT TOP/BOTTOM RAIL
.857
.715
1.934
.813
.062
.930
2 STD. FRAME SILL
.992
1.118
.813
.983
.062 TYP.
2.996
2.375
.500
2.330
8 JAMB STILE
2.188
.062
.949
1.149
.868
.489
1.250
.813
2A HI-RISE FRAME SILL
.992
1.118
.062 TYP.
.813
.983
.078
.078
3.437
2.816
.500
2.330
3 FRAME JAMB
2.130
.062
2.392
1.678
.282
2.555
.868
.969
.719
10 SILL TRACK
.188
.062
.250
.312
1.098
11 SILL RISER
.068
.450
2.500
.046
21 GLAZING WEDGE
SCALE 1:1
.328
.543
.250
.224
.368
.115
21.1
9 GLAZING BEAD
.837
.803
.062
.147
12 VENT LATCH
1.421
1.122
.760
.078
1.230
27 FLUSH FRAME ADAPTER
2.190
.062
.770
.500
2.268
6 STD. MEETING RAIL SERIES-2000
2.063
.062
.930
1.130
1.250
6.1 STD. MEETING RAIL SERIES-2050
2.063
.062
.930
1.130
1.250
9A SQUARE GLAZING STOP
.329
.803
.050
.837
6A H.D. MEETING RAIL SERIES-2000
2.063
.062
.930
1.630
1.250
6A.1 H.D. MEETING RAIL SERIES-2050
2.063
.062
.930
1.630
1.250
9B SQUARE GLAZING STOP
.203
.803
.050
.837
6B H.D. MEETING RAIL SERIES-2000
2.063
.930
.062
1.630
1.250
6B.1 H.D. MEETING RAIL SERIES-2050
2.063
.930
.062
1.630
1.250
5 FIXED RAIL SERIES-2000
2.113
1.675
1.212
.992
.062
1.250
5.1 FIXED RAIL SERIES-2050
2.181
.994
1.212
.992
.062
1.250
PRODUCT REVISED
as complying with the Florida
Building Code
Acceptance No 14-0923.10
Expiration Date 11/06/2018
By
Miami Dade Product Control
Engr: JAVAD AHMAD
CIVIL
FLA. PE # 70592
C.A.N. 3538
OCT 14 2014
AL-FAROOQ CORPORATION
ENGINEERS & PROJECT DEVELOPMENT
1235 S.W. 87 AVE
MIAMI, FLORIDA 33174
TEL. (305) 264-8300
FAX. (305) 262-6978
COMP-ANL\W03-75ES
SERIES-2000/2050 ALUM HORIZ. SLIDING WDW. (L.M.I.)
E.S. WINDOWS, LLC
5220 N.W. 72 AVE. BAY #4
MIAMI, FL. 33166
TEL. (305) 624-7775 FAX. (305) 624-7777
revisions:
no date by description
E 05.25.09 GENERAL REVISION
F 12.09.11 ALT. GLAZING OPTION ADDED
G 05.15.12 REV. PER PERA COMMENTS
H 09.16.14 UPDATED TO 2014 FBC
date: 08-27-03
scale: 1/2" = 1"
dr. by: HAMID
chk. by:
drawing no.
W03-75
sheet 8 of 9

CMB

05·19·15

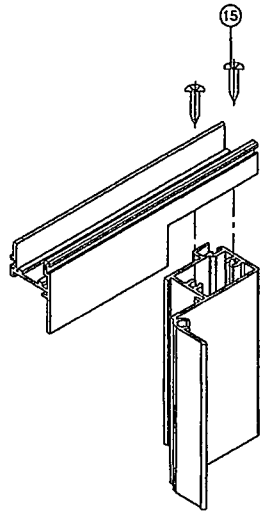

VENT TOP/BOTTOM CORNERS

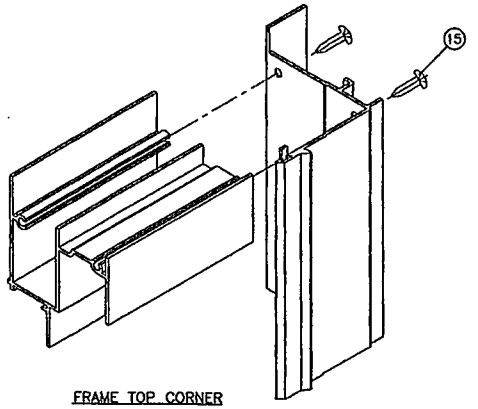

FRAME TOP CORNER

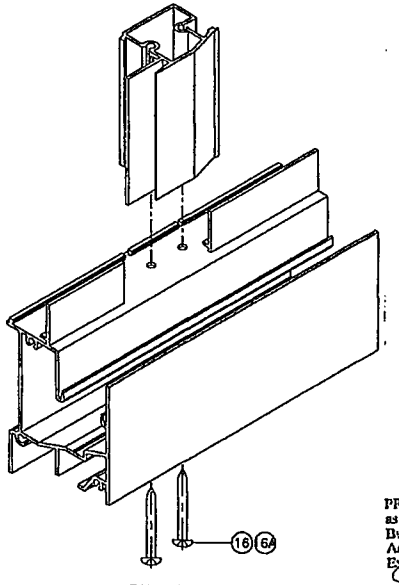

FIXED MTG. RAIL CORNER

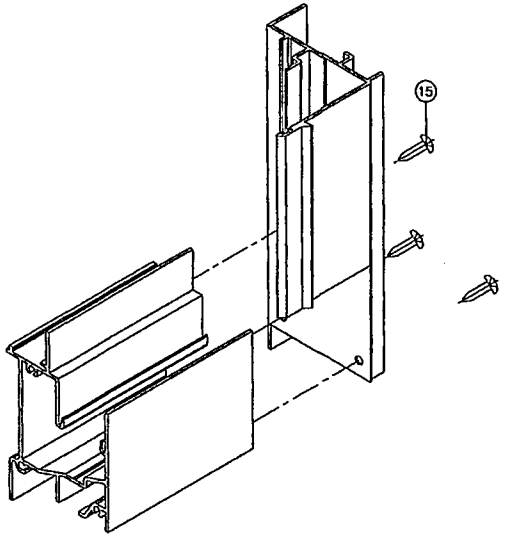

FRAME BOTTOM CORNER

PRODUCT REVISED
as complying with the Florida
Building Code
Acceptance No 14-0923.10
Expiration Date 11/06/2018
By
Miami Dade Product Control

Engr: JAVAD AHMAD
CIVIL
FLA. PE # 70592
C.A.N. 3538

OCT 24 2014

AL-FAROOQ CORPORATION
ENGINEERS & PRODUCT DEVELOPMENT
1235 S.W. 87 AVE
MIAMI, FLORIDA 33174
TEL (305) 264-8100 FAX. (305) 262-6978
COMP-ANL\W03-75ES

SERIES-2000/2050 ALUM HORIZ. SLIDING WDW. (L.M.I.)

E.S. WINDOWS, LLC
5220 N.W. 72 AVE. BAY #4
MIAMI, FL. 33166
TEL. (305) 624-7775 FAX. (305) 624-7777

revisions:

no	date	by	description
E	06.25.09		GENERAL REVISION
F	12.09.11		NO CHANGE THIS SHEET
G	05.15.12		NO CHANGE THIS SHEET
H	09.15.14		NO CHANGE THIS SHEET

date: 08-27-03
scale: 1/2" = 1"
dr. by: HAMID
chk. by:

drawing no.
W03-75

sheet 9 of 9

B150422

MIAMI-DADE COUNTY

DEPARTMENT OF REGULATORY AND ECONOMIC RESOURCES (RER)
BOARD AND CODE ADMINISTRATION DIVISION

MIAMI-DADE COUNTY
PRODUCT CONTROL SECTION
11805 SW 26 Street, Room 208
T (786) 315-2590 F (786) 315-2599
www.miamidadegov/economy

NOTICE OF ACCEPTANCE (NOA)

ES Windows, LLC
10653 N.E. Quaybridge Ct.
Miami, FL 33138

SCOPE:

This NOA is being issued under the applicable rules and regulations governing the use of construction materials. The documentation submitted has been reviewed and accepted by Miami-Dade County RER-Product Control Section to be used in Miami-Dade County and other areas where allowed by the Authority Having Jurisdiction (AHJ).

This NOA shall not be valid after the expiration date stated below. The Miami-Dade County Product Control Section (In Miami-Dade County) and/or the AHJ (in areas other than Miami-Dade County) reserve the right to have this product or material tested for quality assurance purposes. If this product or material fails to perform in the accepted manner, the manufacturer will incur the expense of such testing and the AHJ may immediately revoke, modify, or suspend the use of such product or material within their jurisdiction. RER reserves the right to revoke this acceptance, if it is determined by Miami-Dade County Product Control Section that this product or material fails to meet the requirements of the applicable building code.

This product is approved as described herein, and has been designed to comply with the Florida Building Code, including the High Velocity Hurricane Zone.

DESCRIPTION: Series "1500" Aluminum Fixed Window – L.M.I.

APPROVAL DOCUMENT: Drawing No. **W03-57**, titled "Series-1500 Aluminum Fixed Window (L.M.I.)", sheets 01 through 07 of 07, dated 07/31/03, with revision "F" dated 08/22/14, prepared by Al-Farooq Corporation, signed and sealed by Javad Ahmad, P.E., bearing the Miami-Dade County Product Control Revision stamp with the Notice of Acceptance number and expiration date by the Miami-Dade County Product Control Section.

MISSILE IMPACT RATING: Large and Small Missile Impact Resistant

LABELING: Each unit shall bear a permanent label with the manufacturer's name or logo, **Barranquilla, Colombia, America Latina**, series, and following statement: "Miami-Dade County Product Control Approved", unless otherwise noted herein.

RENEWAL of this NOA shall be considered after a renewal application has been filed and there has been no change in the applicable building code negatively affecting the performance of this product.

TERMINATION of this NOA will occur after the expiration date or if there has been a revision or change in the materials, use, and/ or manufacture of the product or process. Misuse of this NOA as an endorsement of any product, for sales, advertising or any other purposes shall automatically terminate this NOA. Failure to comply with any section of this NOA shall be cause for termination and removal of NOA.

ADVERTISEMENT: The NOA number preceded by the words Miami-Dade County, Florida, and followed by the expiration date may be displayed in advertising literature. If any portion of the NOA is displayed, then it shall be done in its entirety.

INSPECTION: A copy of this entire NOA shall be provided to the user by the manufacturer or its distributors and shall be available for inspection at the job site at the request of the Building Official.

This NOA revises **NOA No. 13-0617.26** and consists of this page 1 and evidence pages E-1, E-2 and E-3, as well as approval document mentioned above.

The submitted documentation was reviewed by **Jaime D. Gascon, P. E.**

MIAMI-DADE COUNTY APPROVED

J. Gascon
2/5/15

NOA No. 14-0923.08
Expiration Date: November 06, 2018
Approval Date: February 12, 2015

NOTICE OF ACCEPTANCE: EVIDENCE SUBMITTED

A. DRAWINGS

1. Manufacturer's die drawings and sections.
   (Submitted under NOA No. 03–0910.01)
2. Drawing No. **W03–57**, titled "Series–1500 Aluminum Fixed Window (L.M.I.)", sheets 01 through 07 of 07, dated 07/31/03, with revision "F" dated 08/22/14, prepared by Al–Farooq Corporation, signed and sealed by Javad Ahmad, P. E.

B. TESTS

1. Test reports on: 1) Air Infiltration Test, per FBC, TAS 202–94
   2) Uniform Static Air Pressure Test, Loading per FBC TAS 202–94
   3) Water Resistance Test, per FBC, TAS 202–94
   4) Large Missile Impact Test per FBC, TAS 201–94
   5) Cyclic Wind Pressure Loading per FBC, TAS 203–94

   along with marked–up drawings and installation diagram of an aluminum fixed window, prepared by Fenestration Testing Laboratory, Inc., Test Report No. **FTL–5339**, dated 02/11/08, signed and sealed by Michael R. Wenzel, P.E.
   (Submitted under NOA No. 08–0417.06)
2. Test reports on: 1) Air Infiltration Test, per FBC, TAS 202–94
   2) Uniform Static Air Pressure Test, Loading per FBC TAS 202–94
   3) Water Resistance Test, per FBC, TAS 202–94
   4) Large Missile Impact Test per FBC, TAS 201–94
   5) Cyclic Wind Pressure Loading per FBC, TAS 203–94

   along with marked–up drawings and installation diagram of an aluminum fixed window, prepared by Fenestration Testing Laboratory, Inc., Test Report No. **FTL–5054**, dated 10/03/06, signed and sealed by Edmundo Largaespada, P.E.
   (Submitted under NOA No. 06–0308.05)
3. Test reports on: 1) Air Infiltration Test, per FBC, TAS 202–94
   2) Uniform Static Air Pressure Test, Loading per FBC TAS 202–94
   3) Water Resistance Test, per FBC, TAS 202–94
   4) Large Missile Impact Test per FBC, TAS 201–94
   5) Cyclic Wind Pressure Loading per FBC, TAS 203–94

   along with marked–up drawings and installation diagram of an aluminum fixed window, prepared by Fenestration Testing Laboratory, Inc., Test Reports No. **FTL–3810**, **FTL–3819** and **FTL–3808**, dated 05/16/03, 06/09/03 and 05/14/03 respectively, all signed and sealed by Joseph C. Chan, P.E.
   (Submitted under NOA No. 03–0910.01)

Jaime D. Gascon, P. E.
Product Control Section Supervisor
NOA No. 14–0923.08
Expiration Date: November 06, 2018
Approval Date: February 12, 2015

NOTICE OF ACCEPTANCE: EVIDENCE SUBMITTED

C. CALCULATIONS

1. Anchor verification calculations and structural analysis, conformance to and complying with **FBC–2010**, and with **FBC 5th Edition (2014)**, prepared by Al-Farooq Corporation, dated 09/10/2014 and 02/09/2015, signed and sealed by Javad Ahmad, P. E.
2. **Glazing complies with ASTM E1300–04/ 09**

D. QUALITY ASSURANCE

1. Miami–Dade Department of Regulatory and Economic Resources (RER)

E. MATERIAL CERTIFICATIONS

1. Notice of Acceptance No. **11–0624.02** issued to **E.I. DuPont DeNemours & Co., Inc.** for their **"DuPont Sentry Glass® Interlayer"** dated 05/26/10, expiring on 01/14/17.
2. Notice of Acceptance No. **13–0129.27** issued to **E.I. DuPont DeNemours & Co., Inc.** for their **"DuPont Butacite® PVB Interlayer"** dated 04/11/13, expiring on 12/11/16.

F. STATEMENTS

1. Statement letter of conformance to, complying with **FBC 5th Edition (2014)**, and of no financial interest, dated 08/14/14, signed and sealed by Javad Ahmad, P. E.
2. Statement letter of conformance to, complying with **FBC–2010**, and of no financial interest, dated 12/08/11 and 06/05/13, signed and sealed by Javad Ahmad, P. E.
   (Submitted partially under previous NOA No. 12–0223.41)
3. Distributor Agreement, dated 10/20/10, signed by Carla Garcia Torrente and by Andres Chamorro.
   (Submitted partially under previous NOA No. 12–0223.41)
4. Laboratory compliance letter for Test Report No. **FTL–6236**, issued by Fenestration Testing Laboratory, Inc., dated 06/15/10, signed and sealed by Jorge A. Causo, P.E.
   (Submitted under previous NOA No. 12–0223.41)
5. Proposal No. **09–1583** issued by Product Control, dated 11/23/09, signed by Jaime D. Gascon, P. E.
   (Submitted under previous NOA No. 08–0417.06)
6. Laboratory compliance letter for Test Report No. **FTL–5339**, issued by Fenestration Testing Laboratory, Inc., dated 02/11/08, signed and sealed by Michael R. Wenzel, P. E.
   (Submitted under previous NOA No.08–0417.06)
7. Laboratory compliance letter for Test Report No. **FTL–5054**, issued by Fenestration Testing Laboratory, Inc., dated 10/03/06, signed and sealed by Edmundo Largaespada, P. E.
   (Submitted under previous NOA No.06–0308.05)

Jaime D. Gascon, P.E.
Product Control Section Supervisor
NOA No. 14–0923.08
Expiration Date: November 06, 2018
Approval Date: February 12, 2015

NOTICE OF ACCEPTANCE: EVIDENCE SUBMITTED

F. STATEMENTS (CONTINUED)

8. Laboratory compliance letter for Test Reports No.'s **FTL–3810, FTL–3819** and **FTL–3808**, issued by Fenestration Testing Laboratory, Inc., dated 05/16/03, 06/09/03 and 05/14/03, all signed and sealed by Joseph C. Chan, P.E.
(Submitted under previous NOA No. 03–0910.01)

G. OTHERS

1. Notice of Acceptance No. **13–0617.26**, issued to ES Windows, LLC, for their Series "1500" Aluminum Fixed Window – L.M.I., approved on 09/19/13 and expiring on 11/06/18.

Jaime D. Gascon, P. E.
Product Control Section Supervisor
NOA No. 14–0923.08
Expiration Date: November 06, 2018
Approval Date: February 12, 2015

CMB

05·19·15

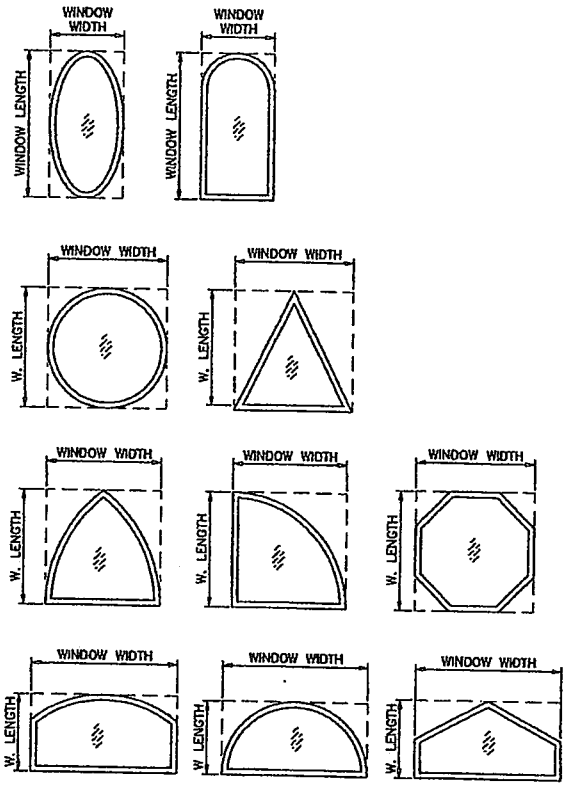

ALLOWABLE LOADS FOR ALTERNATE SHAPES AS SHOWN ABOVE OR SIMILAR CAN BE VERIFIED BY INSCRIBING PICTURE WINDOW SHAPE WITHIN SQUARE OR RECTANGLE AS SHOWN IN DOTTED LINES AND OBTAINING ALLOWABLE LOADS FROM THOSE SHAPES.

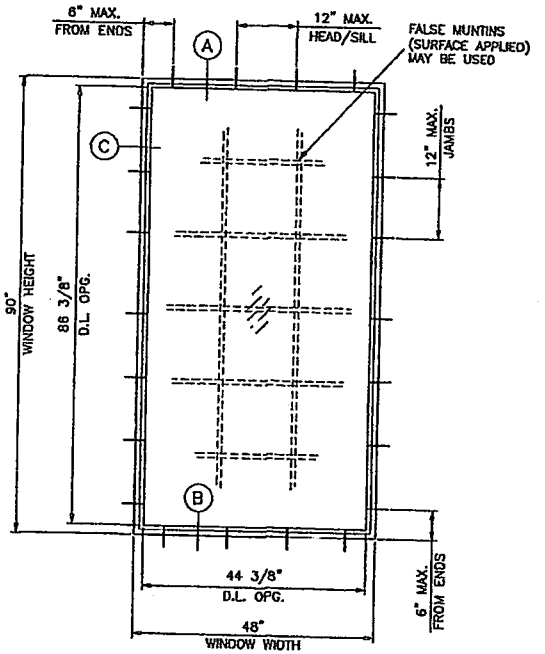

TYPICAL ELEVATION

SERIES-1500 ALUMINUM FIXED WINDOW

APPROVAL APPLIES TO SINGLE UNITS OR SIDE BY SIDE COMBINATIONS OF FIXED/FIXED OR FIXED WITH OTHER MIAMI-DADE COUNTY APPR'D WINDOWS USING MIAMI-DADE COUNTY APPROVED MULLIONS IN BETWEEN.
LOWER DESIGN PRESSURE FROM WINDOWS OR MULLION APPROVAL WILL APPLY TO ENTIRE SYSTEM.

DESIGN LOAD RATING FOR THESE WINDOWS TO BE AS PER CHARTS SHOWN ON SHEET 3.

THIS PRODUCT HAS BEEN DESIGNED AND TESTED TO COMPLY WITH THE REQUIREMENTS OF THE FLORIDA BUILDING CODE INCLUDING HIGH VELOCITY HURRICANE ZONE (HVHZ).

WOOD BUCKS BY OTHERS, MUST BE ANCHORED PROPERLY TO TRANSFER LOADS TO THE STRUCTURE.

ANCHORS SHALL BE AS LISTED, SPACED AS SHOWN ON DETAILS, ANCHORS EMBEDMENT TO BASE MATERIAL SHALL BE BEYOND WALL DRESSING OR STUCCO.

ANCHORING OR LOADING CONDITIONS NOT SHOWN IN THESE DETAILS ARE NOT PART OF THIS APPROVAL.

A LOAD DURATION INCREASE IS USED IN DESIGN OF ANCHORS INTO WOOD ONLY.

MATERIALS INCLUDING BUT NOT LIMITED TO STEEL/METAL SCREWS, THAT COME INTO CONTACT WITH OTHER DISSIMILAR MATERIALS SHALL MEET THE REQUIREMENTS OF THE FLORIDA BLDG. CODE.

PRODUCT REVISED
as complying with the Florida
Building Code
Acceptance No 14-0923.08
Expiration Date 11/06/2018
By
Miami Dade Product Control

THESE WINDOWS ARE RATED FOR LARGE & SMALL MISSILE IMPACT. SHUTTERS ARE NOT REQUIRED.

Engr: JAVAD AHMAD
CIVIL
FLA. PE # 70592
C.A.# 3533

SEP 10 2014

AL-FAROOQ CORPORATION
ENGINEERS & PRODUCT DEVELOPMENT
1235 S.W. 87 AVE
MIAMI, FLORIDA 33174
TEL. (305) 264-8100 FAX. (305) 262-6978
COMP-ANL\W03-57ESW

SERIES-1500 ALUMINUM FIXED WINDOW (L.M.I.)

E.S. WINDOWS, LLC
5220 N.W. 72 AVE. BAY #4
MIAMI, FL. 33166
TEL. (305) 624-7775 FAX. (305) 624-7777

revisions:			
no.	date	by	description
B	09.05.05		UPDATED FOR 2004 FBC
C	11.11.06		SHAPES ADDED
D	03.28.08		NOTE REV.
E	12.09.11		ALT. GLAZING OPTION ADDED
F	08.22.14		UPDATED TO 2014 FBC

date: 07-31-03
scale: 1/2"=1'-0"
dr. by: HAMID
chk. by:

drawing no. W03-57

sheet 1 of 7

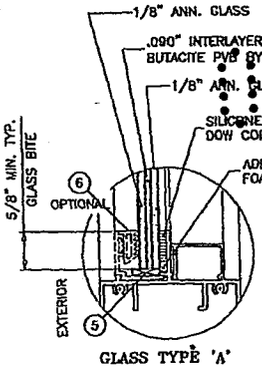

GLASS TYPE 'A'

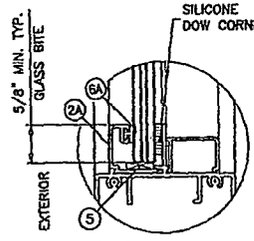

5/16" LAM. GLASS

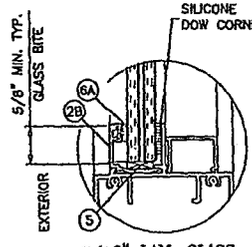

7/16" LAM. GLASS

ALT. GLAZING OPTIONS

SQUARE GLAZING STOP CAN BE USED WITH ALL GLASS TYPES SHOWN ON THIS SHEET.

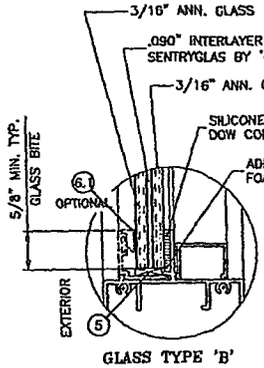

GLASS TYPE 'B'

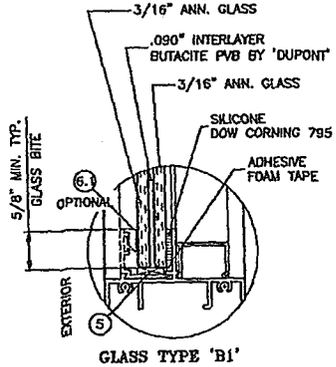

GLASS TYPE 'B1'

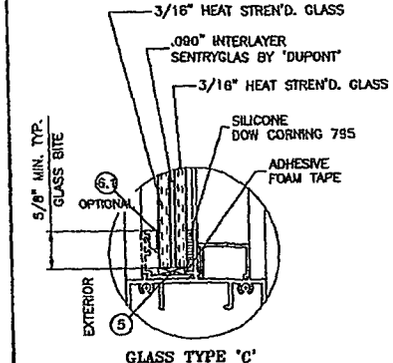

GLASS TYPE 'C'

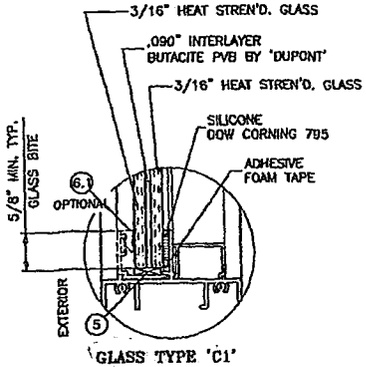

GLASS TYPE 'C1'

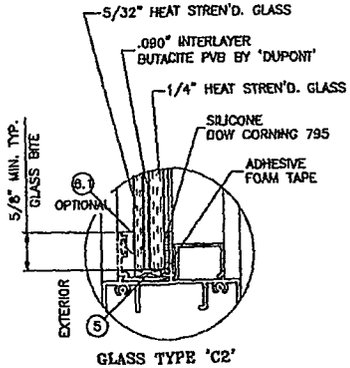

GLASS TYPE 'C2'

PRODUCT REVISED
as complying with the Florida
Building Code
Acceptance No 14-0923.08
Expiration Date 11/06/2018
By
Miami Dade Product Control

Engr: JAVAD AHMAD
CIVIL
FLA. PE # 70592
C.A.N. 3538

SEP 10 2014

revisions:			
no	date	by	description
B	06.05.08		CHARTS REV.
C	11.11.08		SHAPES ADDED
D	03.26.09		GLASS TYPE C2 ADDED
E	12.09.11		ALT. GLAZING OPTION ADDED
F	08.22.14		NO CHANGE THIS SHEET

date: 07-31-03
scale: 1/2" = 1"
dr. by: HAMID
chk. by:

drawing no. W03-57

sheet 2 of 7

SERIES-1500 ALUMINUM FIXED WINDOW (L.M.I.)

E.S. WINDOWS, LLC
5220 N.W. 72 AVE. BAY #4
MIAMI, FL. 33166
TEL. (305) 624-7775 FAX. (305) 624-7777

AL-FAROOQ CORPORATION
ENGINEERS & PROJECT DEVELOPMENT
12235 S.W. 87 AVE
MIAMI, FLORIDA 33174
TEL. (305) 284-8300 FAX. (305) 282-6978

COMP-ANL\W03-57ESW

DESIGN LOAD CAPACITY – PSF

WINDOW DIMS.		ANCHOR TYPES 'A' & 'C'						ANCHOR TYPES 'B' & 'C'					
		GLASS TYPE 'A'		GLASS TYPES 'B' & 'B1'		GLASS TYPES 'C', 'C1' & 'C2'		GLASS TYPE 'A'		GLASS TYPES 'B' & 'B1'		GLASS TYPES 'C', 'C1' & 'C2'	
WIDTH	HEIGHT	EXT.(+)	INT.(–)	EXT.(+)	INT.(–)	EXT.(+)	INT.(–)	EXT.(+)	INT.(–)	EXT.(+)	INT.(–)	EXT.(+)	INT.(–)
18"	36"	70.0	70.0	70.0	90.0	70.0	80.0	70.0	70.0	70.0	90.0	70.0	80.0
24"		70.0	70.0	70.0	72.0	70.0	72.0	70.0	70.0	70.0	90.0	70.0	80.0
30"		57.6	57.6	57.6	57.6	57.6	57.6	70.0	70.0	70.0	90.0	70.0	80.0
36"		48.0	48.0	48.0	48.0	48.0	48.0	70.0	70.0	70.0	90.0	70.0	80.0
42"		48.0	48.0	48.0	48.0	48.0	48.0	70.0	70.0	70.0	90.0	70.0	80.0
48"		48.0	48.0	48.0	48.0	48.0	48.0	70.0	70.0	70.0	90.0	70.0	80.0
54"		48.0	48.0	48.0	48.0	48.0	48.0	70.0	70.0	70.0	90.0	70.0	80.0
60"		48.0	48.0	48.0	48.0	48.0	48.0	67.3	67.3	70.0	90.0	70.0	80.0
18"	48"	70.0	70.0	70.0	90.0	70.0	80.0	70.0	70.0	70.0	90.0	70.0	80.0
24"		70.0	70.0	70.0	72.0	70.0	72.0	70.0	70.0	70.0	90.0	70.0	80.0
30"		57.6	57.6	57.6	57.6	57.6	57.6	70.0	70.0	70.0	90.0	70.0	80.0
36"		48.0	48.0	48.0	48.0	48.0	48.0	70.0	70.0	70.0	90.0	70.0	80.0
42"		41.1	41.1	41.1	41.1	41.1	41.1	60.0	60.0	70.0	90.0	70.0	80.0
48"		–	–	36.0	36.0	36.0	36.0	–	–	70.0	90.0	70.0	80.0
54"		–	–	36.0	36.0	36.0	36.0	–	–	70.0	90.0	70.0	80.0
60"		–	–	36.0	36.0	36.0	36.0	–	–	70.0	90.0	70.0	80.0
18"	60"	70.0	70.0	70.0	90.0	70.0	80.0	70.0	70.0	70.0	90.0	70.0	80.0
24"		70.0	70.0	70.0	72.0	70.0	72.0	70.0	70.0	70.0	90.0	70.0	80.0
30"		57.6	57.6	57.6	57.6	57.6	57.6	70.0	70.0	70.0	90.0	70.0	80.0
36"		48.0	48.0	48.0	48.0	48.0	48.0	67.3	67.3	70.0	90.0	70.0	80.0
42"		–	–	41.1	41.1	41.1	41.1	–	–	70.0	90.0	70.0	80.0
48"		–	–	36.0	36.0	36.0	36.0	–	–	70.0	90.0	70.0	80.0
54"		–	–	–	–	32.0	32.0	–	–	–	–	62.2	71.1
60"		–	–	–	–	28.8	28.8	–	–	–	–	56.0	64.0
18"	72"	70.0	70.0	70.0	90.0	70.0	80.0	70.0	70.0	70.0	90.0	70.0	80.0
24"		70.0	70.0	70.0	72.0	70.0	72.0	70.0	70.0	70.0	90.0	70.0	80.0
30"		57.6	57.6	57.6	57.6	57.6	57.6	64.2	64.2	70.0	90.0	70.0	80.0
36"		–	–	48.0	48.0	48.0	48.0	–	–	70.0	90.0	70.0	80.0
42"		–	–	–	–	41.1	41.1	–	–	–	–	70.0	80.0
48"		–	–	–	–	36.0	36.0	–	–	–	–	70.0	80.0
54"		–	–	–	–	32.0	32.0	–	–	–	–	62.2	71.1
60"		–	–	–	–	28.8	28.8	–	–	–	–	56.0	64.0
18"	84"	70.0	70.0	70.0	90.0	70.0	80.0	70.0	70.0	70.0	90.0	70.0	80.0
24"		70.0	70.0	70.0	72.0	70.0	72.0	70.0	70.0	70.0	90.0	70.0	80.0
30"		–	–	57.6	57.6	57.6	57.6	–	–	70.0	90.0	70.0	80.0
36"		–	–	–	–	48.0	48.0	–	–	–	–	70.0	80.0
42"		–	–	–	–	41.1	41.1	–	–	–	–	70.0	80.0
48"		–	–	–	–	36.0	36.0	–	–	–	–	70.0	80.0
18"	90"	70.0	70.0	70.0	90.0	70.0	80.0	70.0	70.0	70.0	90.0	70.0	80.0
24"		70.0	70.0	70.0	72.0	70.0	72.0	70.0	70.0	70.0	90.0	70.0	80.0
30"		–	–	57.6	57.6	57.6	57.6	–	–	70.0	90.0	70.0	80.0
36"		–	–	–	–	48.0	48.0	–	–	–	–	70.0	80.0
42"		–	–	–	–	41.1	41.1	–	–	–	–	70.0	80.0
48"		–	–	–	–	36.0	36.0	–	–	–	–	70.0	80.0
18"	96"	70.0	70.0	70.0	90.0	70.0	80.0	70.0	70.0	70.0	90.0	70.0	80.0
24"		–	–	70.0	72.0	70.0	72.0	–	–	70.0	90.0	70.0	80.0
30"		–	–	57.6	57.6	57.6	57.6	–	–	70.0	90.0	70.0	80.0
36"		–	–	–	–	48.0	48.0	–	–	–	–	70.0	80.0
42"		–	–	–	–	41.1	41.1	–	–	–	–	70.0	80.0

NOTE:
GLASS CAPACITIES ON THIS SHEET ARE
BASED ON ASTM E1300-09 (3 SEC. GUSTS).

DESIGN LOAD CAPACITY – PSF

WINDOW DIMS.		ANCHOR TYPES 'A' & 'C'						ANCHOR TYPES 'B' & 'C'					
		GLASS TYPE 'A'		GLASS TYPES 'B' & 'B1'		GLASS TYPES 'C', 'C1' & 'C2'		GLASS TYPE 'A'		GLASS TYPES 'B' & 'B1'		GLASS TYPES 'C', 'C1' & 'C2'	
WIDTH	HEIGHT	EXT.(+)	INT.(–)	EXT.(+)	INT.(–)	EXT.(+)	INT.(–)	EXT.(+)	INT.(–)	EXT.(+)	INT.(–)	EXT.(+)	INT.(–)
18"	108"	70.0	70.0	70.0	90.0	70.0	80.0	70.0	70.0	70.0	90.0	70.0	80.0
24"		–	–	70.0	72.0	70.0	72.0	–	–	70.0	90.0	70.0	80.0
30"		–	–	–	–	57.6	57.6	–	–	–	–	70.0	80.0
36"		–	–	–	–	48.0	48.0	–	–	–	–	70.0	80.0
18"	120"	56.2	56.2	70.0	90.0	70.0	80.0	56.2	56.2	70.0	90.0	70.0	80.0
24"		–	–	70.0	72.0	70.0	72.0	–	–	70.0	90.0	70.0	80.0
30"		–	–	–	–	57.6	57.6	–	–	–	–	70.0	80.0
36"		–	–	–	–	48.0	48.0	–	–	–	–	70.0	80.0

DESIGN LOAD CAPACITY – PSF

WINDOW DIMS.		ANCHOR TYPES 'A' & 'C'						ANCHOR TYPES 'B' & 'C'					
		GLASS TYPE 'A'		GLASS TYPES 'B' & 'B1'		GLASS TYPES 'C', 'C1' & 'C2'		GLASS TYPE 'A'		GLASS TYPES 'B' & 'B1'		GLASS TYPES 'C', 'C1' & 'C2'	
WIDTH	HEIGHT	EXT.(+)	INT.(–)	EXT.(+)	INT.(–)	EXT.(+)	INT.(–)	EXT.(+)	INT.(–)	EXT.(+)	INT.(–)	EXT.(+)	INT.(–)
19-1/8"	26"	70.0	70.0	70.0	90.0	70.0	80.0	70.0	70.0	70.0	90.0	70.0	80.0
26-1/2"		70.0	70.0	70.0	90.0	70.0	80.0	70.0	70.0	70.0	90.0	70.0	80.0
37"		66.5	66.5	66.5	66.5	66.5	66.5	70.0	70.0	70.0	90.0	70.0	80.0
48"		66.5	66.5	66.5	66.5	66.5	66.5	70.0	70.0	70.0	90.0	70.0	80.0
53-1/8"		66.5	66.5	66.5	66.5	66.5	66.5	70.0	70.0	70.0	90.0	70.0	80.0
19-1/8"	38-3/8"	70.0	70.0	70.0	90.0	70.0	80.0	70.0	70.0	70.0	90.0	70.0	80.0
26-1/2"		65.2	65.2	65.2	65.2	65.2	65.2	70.0	70.0	70.0	90.0	70.0	80.0
37"		46.7	46.7	46.7	46.7	46.7	46.7	68.1	68.1	70.0	90.0	70.0	80.0
48"		45.0	45.0	45.0	45.0	45.0	45.0	65.7	65.7	70.0	90.0	70.0	80.0
53-1/8"		45.0	45.0	45.0	45.0	45.0	45.0	65.7	65.7	70.0	90.0	70.0	80.0
19-1/8"	50-5/8"	70.0	70.0	70.0	90.0	70.0	80.0	70.0	70.0	70.0	90.0	70.0	80.0
26-1/2"		65.2	65.2	65.2	65.2	65.2	65.2	70.0	70.0	70.0	90.0	70.0	80.0
37"		46.7	46.7	46.7	46.7	46.7	46.7	68.1	68.1	70.0	90.0	70.0	80.0
48"		–	–	36.0	36.0	36.0	36.0	–	–	70.0	90.0	70.0	80.0
53-1/8"		–	–	34.1	34.1	34.1	34.1	–	–	66.4	85.3	66.4	75.9
19-1/8"	58"	70.0	70.0	70.0	90.0	70.0	80.0	70.0	70.0	70.0	90.0	70.0	80.0
26-1/2"		65.2	65.2	65.2	65.2	65.2	65.2	70.0	70.0	70.0	90.0	70.0	80.0
37"		46.7	46.7	46.7	46.7	46.7	46.7	68.1	68.1	70.0	90.0	70.0	80.0
48"		–	–	36.0	36.0	36.0	36.0	–	–	70.0	90.0	70.0	80.0
53-1/8"		–	–	–	–	32.5	32.5	–	–	–	–	63.2	72.3
19-1/8"	63"	70.0	70.0	70.0	90.0	70.0	80.0	70.0	70.0	70.0	90.0	70.0	80.0
26-1/2"		65.2	65.2	65.2	65.2	65.2	65.2	70.0	70.0	70.0	90.0	70.0	80.0
37"		–	–	46.7	46.7	46.7	46.7	–	–	70.0	90.0	70.0	80.0
48"		–	–	–	–	36.0	36.0	–	–	–	–	70.0	80.0
53-1/8"		–	–	–	–	32.5	32.5	–	–	–	–	63.2	72.3
19-1/8"	74-1/4"	70.0	70.0	70.0	90.0	70.0	80.0	70.0	70.0	70.0	90.0	70.0	80.0
26-1/2"		65.2	65.2	65.2	65.2	65.2	65.2	70.0	70.0	70.0	90.0	70.0	80.0
37"		–	–	46.7	46.7	46.7	46.7	–	–	70.0	90.0	70.0	80.0
48"		–	–	–	–	36.0	36.0	–	–	–	–	70.0	80.0
53-1/8"		–	–	–	–	32.5	32.5	–	–	–	–	63.2	72.3

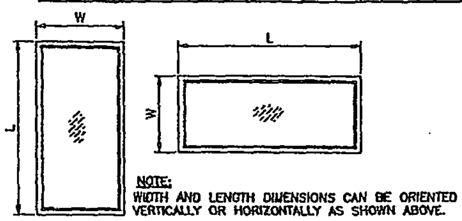

NOTE:
WIDTH AND LENGTH DIMENSIONS CAN BE ORIENTED VERTICALLY OR HORIZONTALLY AS SHOWN ABOVE.

Engr: JAVAD AHMAD
CIVIL
FLA. PE # 70592
C.A.N. 3538
SEP 10 2014

PRODUCT REVISED
as complying with the Florida Building Code
Acceptance No. 14-0923.08
Expiration Date 11/06/2018
By
Miami Dade Product Control

AL-FAROOQ CORPORATION
ENGINEERS & PRODUCT DEVELOPMENT
1235 S.W. 87 AVE
MIAMI, FLORIDA 33174
TEL. (305) 264-8100 FAX. (305) 262-6978

COMP-ANL\W03-57ESW

SERIES-1500 ALUMINUM FIXED WINDOW (L.M.I.)

E.S. WINDOWS, LLC
5220 N.W. 72 AVE. BAY #4
MIAMI, FL. 33166
TEL. (305) 624-7775 FAX. (305) 624-7777

revisions:			
no	date	by	description
B	09.08.05		CHARTS REV.
C	11.11.08		SHAPES ADDED
D	03.26.08		GLASS TYPE C2 ADDED
E	12.09.11		ALT. GLAZING OPTION ADDED
F	08.22.14		NO CHANGE THIS SHEET

date: 07-31-03
scale: -
dr. by: HAMID
chk. by:

drawing no.
W03-57
sheet 3 of 7

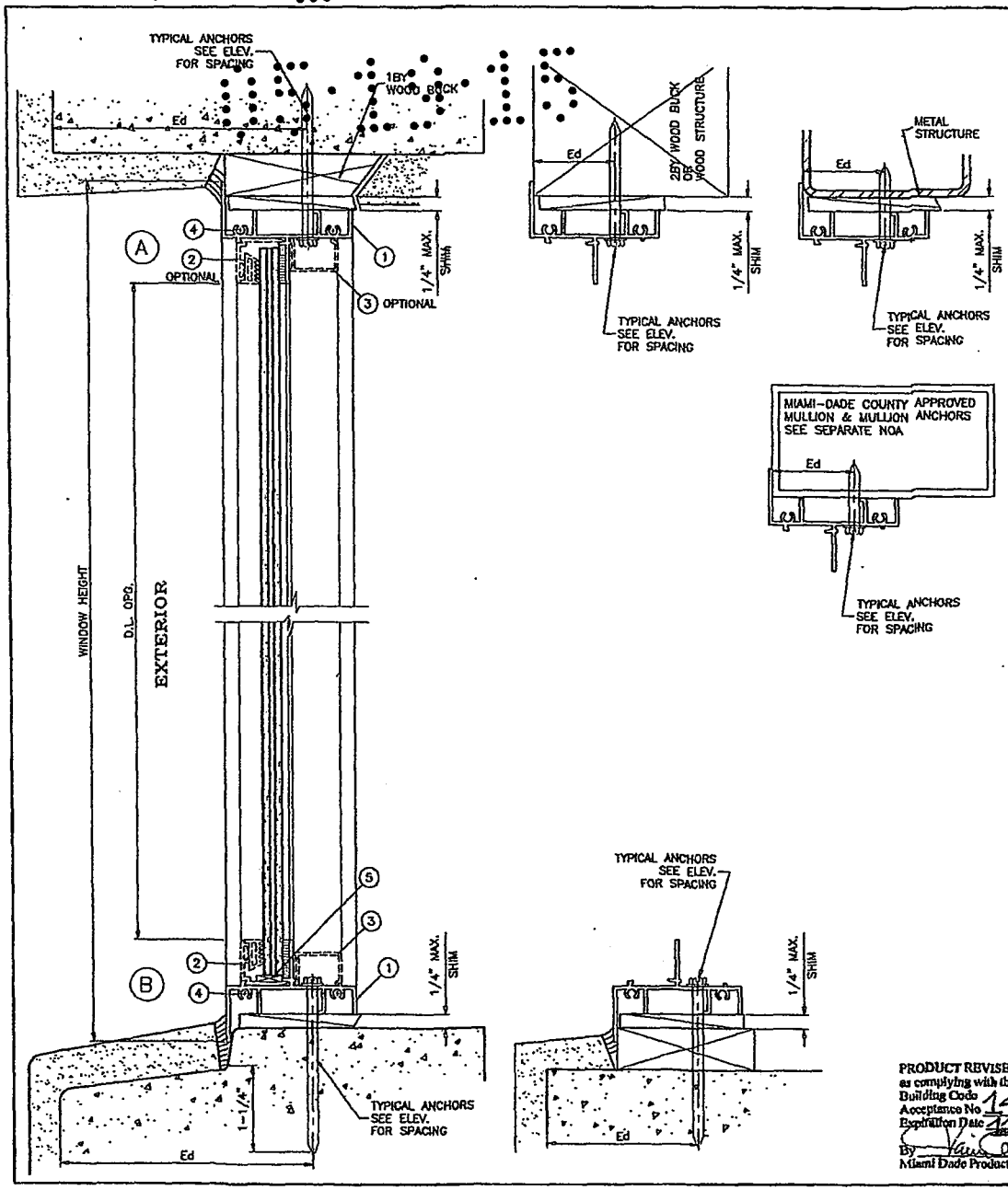

WOOD BUCKS AND METAL STRUCTURE NOT BY E.S. WINDOWS, MUST SUSTAIN LOADS IMPOSED BY GLAZING SYSTEM AND TRANSFER THEM TO THE BUILDING STRUCTURE.

TYPICAL ANCHORS: SEE ELEV. FOR SPACING

TYPE 'A'– 3/16" DIA. ULTRACON BY 'ELCO' (Fu=177 KSI, Fy=155 KSI)

INTO 2BY WOOD BUCKS OR WOOD STRUCTURES
1–1/2" MIN. PENETRATION INTO WOOD

THRU 1BY BUCKS INTO CONC. OR MASONRY
1–1/4" MIN. EMBED INTO CONC. OR MASONRY

DIRECTLY INTO CONC. OR MASONRY
1–1/4" MIN. EMBED INTO CONC. OR MASONRY

3/16" TEKS OR SELF DRILLING SCREWS (GRADE 5 CRS)
INTO METAL STRUCTURES
STEEL : 12 GA. MIN. (Fy = 36 KSI MIN.)
ALUMINUM : 1/8" THK. MIN. (6063–T5 MIN.)
(STEEL IN CONTACT WITH ALUMINUM TO BE PLATED OR PAINTED)

TYPE 'B'– 1/4" DIA. ULTRACON BY 'ELCO' (Fu=177 KSI, Fy=155 KSI)

INTO 2BY WOOD BUCKS OR WOOD STRUCTURES
1–1/2" MIN. PENETRATION INTO WOOD

THRU 1BY BUCKS INTO CONC. OR MASONRY
1–1/4" MIN. EMBED INTO CONC. OR MASONRY

DIRECTLY INTO CONC. OR MASONRY
1–1/4" MIN. EMBED INTO CONC. OR MASONRY

#14 SMS OR SELF DRILLING SCREWS (GRADE 2 CRS)
INTO METAL STRUCTURES
STEEL : 12 GA. MIN. (Fy = 36 KSI MIN.)
ALUMINUM : 1/8" THK. MIN. (6063–T5 MIN.)
(STEEL IN CONTACT WITH ALUMINUM TO BE PLATED OR PAINTED)

TYPE 'C'– #10 SMS OR SELF DRILLING SCREWS (GRADE 2 CRS)
INTO MIAMI–DADE COUNTY APPROVED MULLIONS (MIN. THK. = 1/8")

Ed = ANCHOR EDGE DISTANCE

INTO CONCRETE AND MASONRY = 1–3/8" MIN.
INTO WOOD STRUCTURE = 1" MIN.
INTO METAL STRUCTURE = 1/2" MIN.

WOOD AT HEAD, SILL OR JAMBS SG = 0.55 MIN.
CONCRETE AT HEAD, SILL OR JAMBS f'c = 3000 PSI MIN.
C–90 HOLLOW/FILLED BLOCK AT JAMBS f'm = 2000 PSI MIN.

SEALANT:

ALL JOINTS AND FRAME CONNECTIONS SEALED WITH WHITE/ALUM COLOR SILICONE.

PRODUCT REVISED
as complying with the Florida
Building Code
Acceptance No 14-0923.08
Expiration Date 11/06/2018
By
Miami Dade Product Control

Engr: JAVAD AHMAD
CIVIL
FLA. PE # 70592
CA# 3538
SEP 10 2014

AL-FAROOQ CORPORATION
ENGINEERS & PRODUCT DEVELOPMENT
1235 S.W. 57 AVE
MIAMI, FLORIDA 33174
TEL. (305) 264-8100 FAX. (305) 262-6978

COMP-ANL\W03-57ESW

SERIES-1500 ALUMINUM FIXED WINDOW (L.M.I.)

E.S. WINDOWS, LLC
5220 N.W. 72 AVE. BAY #4
MIAMI, FL. 33166
TEL. (305) 624-7775 FAX. (305) 624-7777

revisions:

no	date	by	description
B	08.05.05		ANCHORS REV.
C	11.11.06		SHAPES ADDED
D	03.26.08		NO CHANGE THIS SHEET
E	12.09.11		ANCHORS REV.
F	08.22.14		UPDATED TO 2014 FBC

date: 07-31-03
scale: 1/2" = 1"
dr. by: HAMID
chk. by:

drawing no.
W03-57

sheet 4 of 7

CMB

05·19·15

ITEM	PART #	QUANTITY	DESCRIPTION	MATERIAL	MANF./SUPPLIER/REMARKS
1	ES5001	4	WINDOW FRAME	6063-T6	--
2	ES1008	OPTIONAL	GLAZING STOP	6063-T6	--
2A	ES1103	4/ WDW.	GLAZING STOP (5/16" GLASS)	6063-T5	--
2B	ES1017	4/ WDW.	GLAZING STOP (7/16" GLASS)	6063-T5	--
3	ES5002	4	FRAME COVER (OPTIONAL)	6063-T5	--
4	#8 X 1"	AS REQD.	ASSEMBLY SCREWS	CRS	FH SMS
4A	#8 X 1/2"	AS REQD.	ASSEMBLY SCREWS	CRS	FH SMS
5	27-372	2/ LITE	SETTING BLOCK, 7/16" X 3/16" X 3-1/2" LONG	EPDM	DUROMETER 75±5 SHORE A
6	ES1010	OPTIONAL	GLAZING WEDGE	SOFT PVC	DUROMETER 70 SHORE 'A'
6.1	ES4013	OPTIONAL	GLAZING WEDGE	SOFT PVC	DUROMETER 70 SHORE 'A'
6A	27-425	4/ WDW.	GLAZING GASKET	EPDM	DUROMETER 60 SHORE 'A'
7	ES1505	--	FLUSH FRAME ADAPTER	6063-T5	OPTIONAL

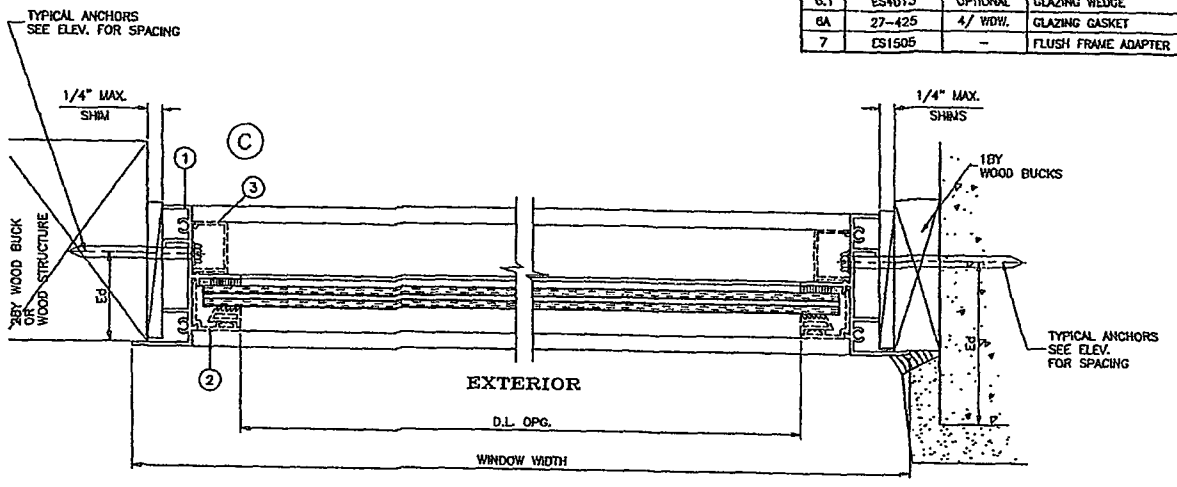

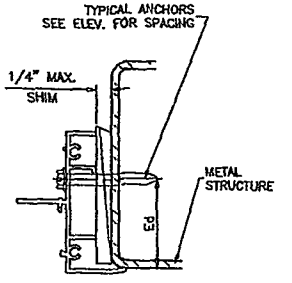

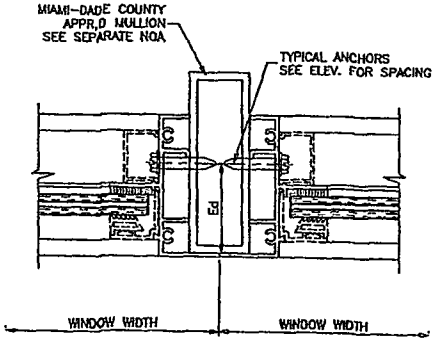

PRODUCT REVISED
as complying with the Florida
Building Code
Acceptance No 14-0923.08
Expiration Date 11/06/2018
By
Miami Dade Product Control

Engr: JAVAD AHMAD
CIVIL
FLA. PE # 70592
C.A.N. 3538
FEB 09 2015

AL-FAROOQ CORPORATION
ENGINEERS & PRODUCT DEVELOPMENT
1235 S.W. 87 AVE
MIAMI, FLORIDA 33174
TEL. (305) 264-8300 FAX. (305) 262-6978
COMP-ANL\W03-57ESW

SERIES-1500 ALUMINUM FIXED WINDOW (L.M.I.)

E.S. WINDOWS, LLC
5220 N.W. 72 AVE. BAY #4
MIAMI, FL. 33166
TEL. (305) 824-7775 FAX. (305) 824-7777

revisions:			
no.	date	by	description
D	03.26.08		NO CHANGE THIS SHEET
E	12.09.11		ALT. GLAZING OPTION ADDED
F	08.22.14		UPDATED TO 2014 FBC
G	01.30.15		NO CHANGE THIS SHEET

date: 07-31-03
scale: 1/2" = 1"
dr. by: HAMID
chk. by:

drawing no.
W03-57

sheet 5 of 7

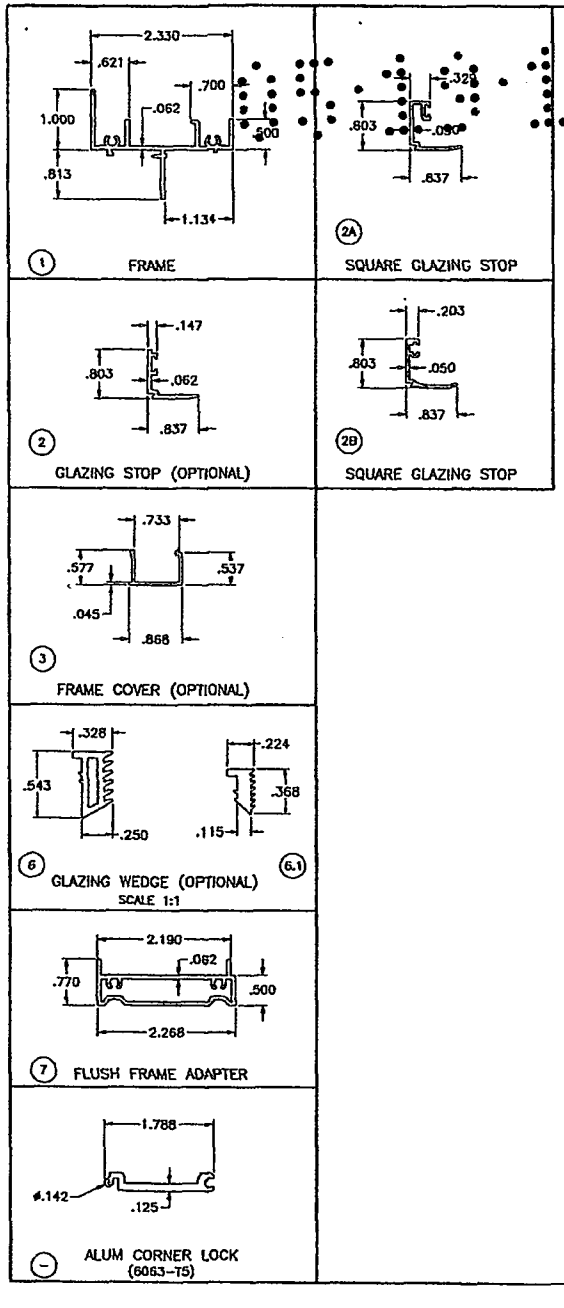

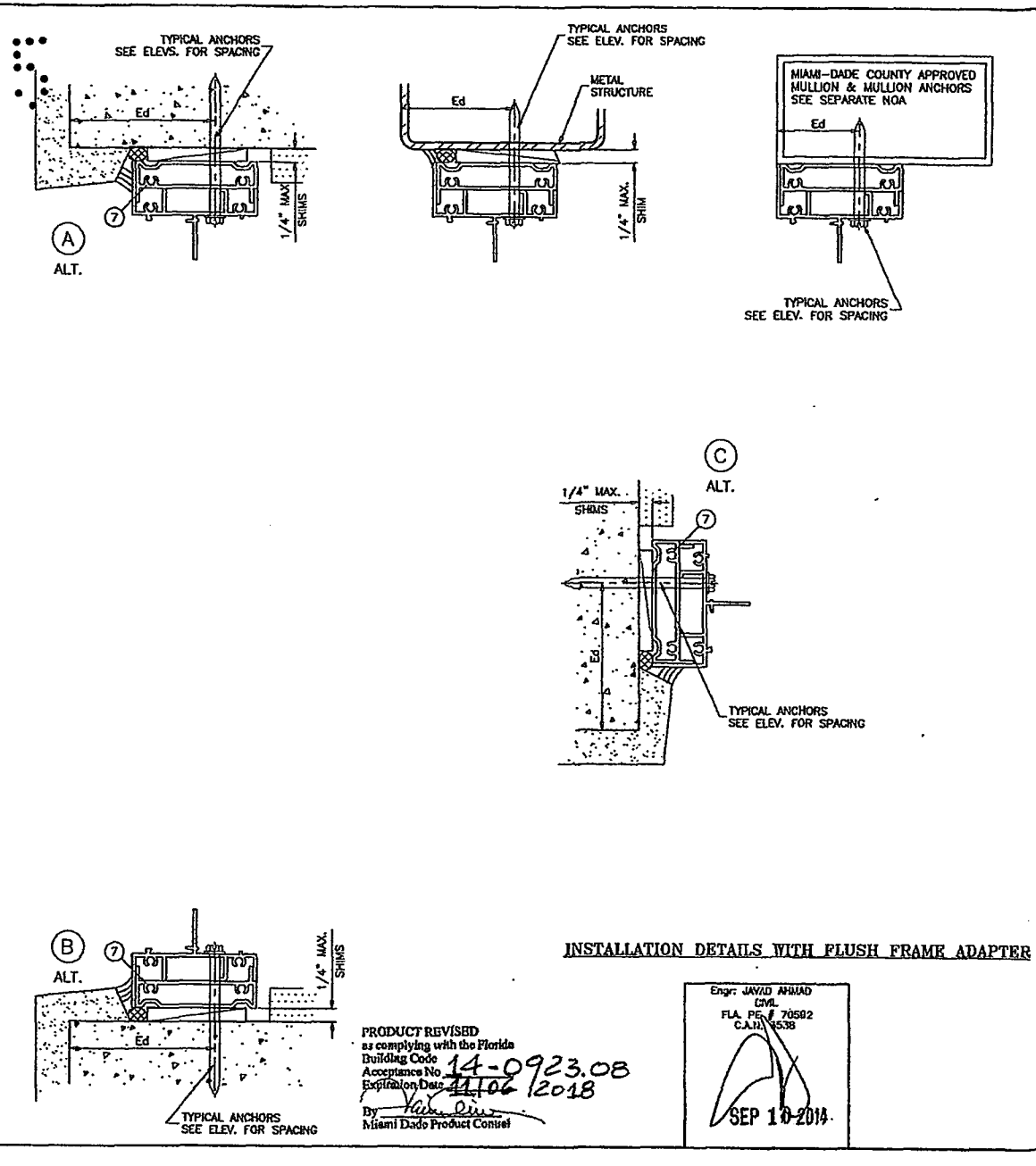

INSTALLATION DETAILS WITH FLUSH FRAME ADAPTER

PRODUCT REVISED
as complying with the Florida
Building Code
Acceptance No. 14-0923.08
Expiration Date 11/06/2018
By
Miami Dade Product Control

Engr: JAVID AHMAD
CIVIL
FLA. PE. # 70592
C.A.R. # 8538
SEP 10 2014

AL-FAROOQ CORPORATION
ENGINEERS & PRODUCT DEVELOPMENT
1235 S.W. 87 AVE
MIAMI, FLORIDA 33174
TEL. (305) 264-8300 FAX. (305) 262-6978
COMP-ANL\W03-57ESW

SERIES-1500 ALUMINUM FIXED WINDOW (L.M.I.)

E.S. WINDOWS, LLC
5220 N.W. 72 AVE. BAY #4
MIAMI, FL. 33166
TEL. (305) 624-7775 FAX. (305) 624-7777

revisions:

no	date	by	description
B	06.05.06		FRAME ADAPTER ADDED
C	11.11.06		SHAPES ADDED
D	03.26.08		NO CHANGE THIS SHEET
E	12.09.11		ALT. GLAZING OPTION ADDED
F	08.22.14		NO CHANGE THIS SHEET

date: 07-31-03
scale: 1/2" = 1"
dr. by: HAMID
chk. by:

drawing no.
W03-57

sheet 6 of 7

CMB

05·19·15

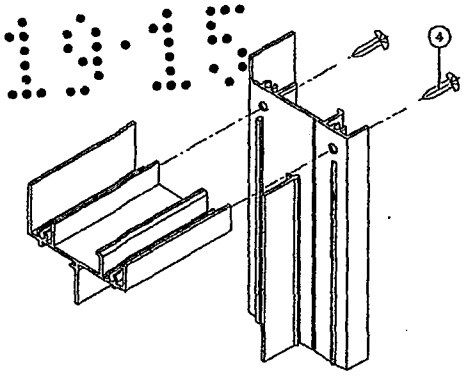

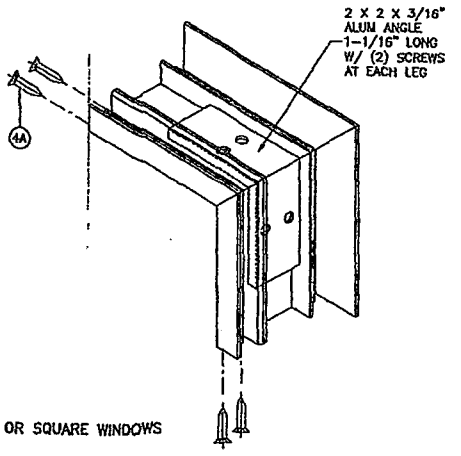

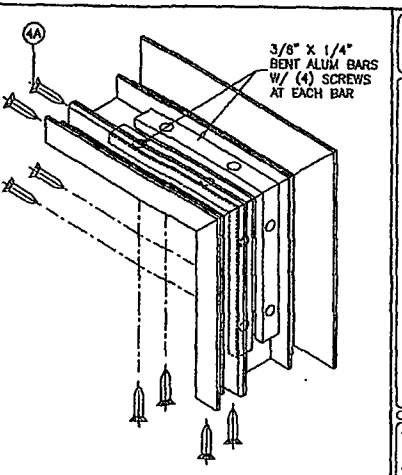

RECT. OR SQUARE WINDOWS

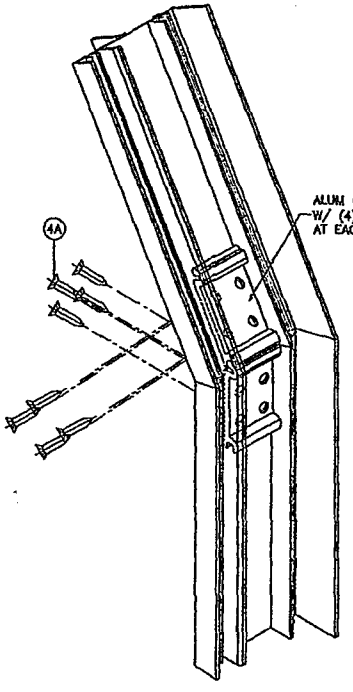

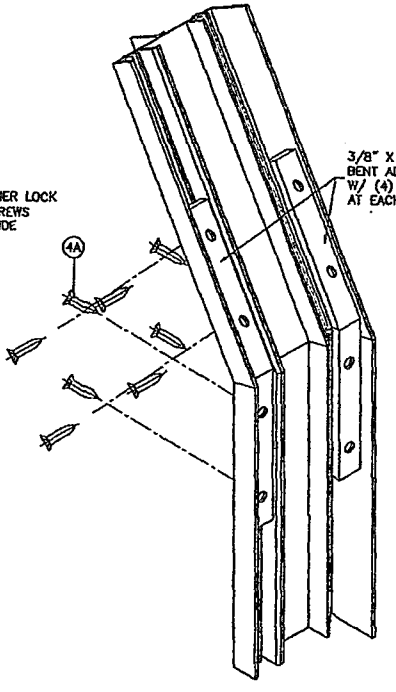

CIRCULAR OR ANGULAR WINDOWS

TYPICAL CORNER DETAILS

PRODUCT REVISED
as complying with the Florida
Building Code
Acceptance No 14-0923.08
Expiration Date 11/09/2018
By
Miami Dade Product Control

Engr: JAVAD AHMAD
CIVIL
FLA. PE # 70592
C.A.N. 3538

FEB 09 2015

AL-FAROOQ CORPORATION
ENGINEERS & PRODUCT DEVELOPMENT
1235 S.W. 87 AVE
MIAMI, FLORIDA 33174
TEL. (305) 264-8100 FAX. (305) 262-5978
COMP-ANL \W03-57ESW

SERIES-1500 ALUMINUM FIXED WINDOW (L.M.I.)

E.S. WINDOWS, LLC
5220 N.W. 72 AVE. BAY #4
MIAMI, FL. 33166
TEL. (305) 624-7775 FAX. (305) 624-7777

revisions:

no	date	by	description
D	03.28.08		NO CHANGE THIS SHEET
E	12.09.11		NO CHANGE THIS SHEET
F	08.22.14		NO CHANGE THIS SHEET
G	01.30.15		REV. PER REF. COMMENTS

date: 07-31-03
scale: 1/2" = 1"
dr. by: HAMID
chk. by:

drawing no.
W03-57

sheet 7 of 7

B1504272

MIAMI-DADE COUNTY
DEPARTMENT OF REGULATORY AND ECONOMIC RESOURCES (RER)
BOARD AND CODE ADMINISTRATION DIVISION

MIAMI-DADE COUNTY, FLORIDA
PRODUCT CONTROL SECTION
11805 SW 26 Street, Room 208
T (786) 315-2590 F (786) 315-2599
www.miamidade.gov/economy

NOTICE OF ACCEPTANCE (NOA)

E.S. Windows, LLC
10653 NE Quaybridge Ct.
Miami, Fl.33138

SCOPE:

This NOA is being issued under the applicable rules and regulations governing the use of construction materials. The documentation submitted has been reviewed and accepted by Miami-Dade County RER-Product Control Section to be used in Miami-Dade County and other areas where allowed by the Authority Having Jurisdiction (AHJ).

This NOA shall not be valid after the expiration date stated below. The Miami-Dade County Product Control Section (In Miami-Dade County) and/ or the AHJ (in areas other than Miami-Dade County) reserve the right to have this product or material tested for quality assurance purposes. If this product or material fails to perform in the accepted manner, the manufacturer will incur the expense of such testing and the AHJ may immediately revoke, modify, or suspend the use of such product or material within their jurisdiction. RER reserves the right to revoke this acceptance, if it is determined by Miami-Dade County Product Control Section that this product or material fails to meet the requirements of the applicable building code. This product is approved as described herein, and has been designed to comply with the Florida Building Code, including the High Velocity Hurricane Zone.

NOTICE: In addition to the requirement of this permit, there may be additional restrictions applicable to this property that may be found in the Public Records of this County, and there may be additional permits required from other governmental entities such as water management's districts, state agencies, or federal agencies. The City of Miami-Dade County assumes no responsibility for acceptance of or results from these approvals which are approved subject to compliance with all Federal, State, and Local Laws, Rules, and Regulations.

DESCRIPTION: Series "3000" Aluminum Outswing French Doors w/ wo Sidelites – L.M.I.

APPROVAL DOCUMENT: Drawing No. **W04-51**, titled "Series-3000 Alum. Outswing French Doors (L.M.I.)", sheets 01, 02, 2.1, 2.2 through 06 & 6.1 of 10, dated 06/10/04 with revision "G" dated 02/24/12, prepared by Al-Farooq Corporation, signed and sealed by Javad Ahmad, P. E., bearing the Miami-Dade County Product Control Section Renewal stamp with the Notice of Acceptance number and Expiration date by the Miami-Dade County Product Control Section.

MISSILE IMPACT RATING: Large and Small Missile Impact Resistant

LIMITATIONS: 1. See sheet 2.1 for single sidelite and sheet 2.2 for doors with sidelites options;

2. Lower Design Pressures of Doors, sidelites, hardware, glass and threshold options shall control.

LABELING: Each unit shall bear a permanent label with the manufacturer's name or logo, **Barranquilla, Columbia**, series, and following statement: "Miami-Dade County Product Control Approved", unless otherwise noted herein.

REVISION of this NOA shall be considered after a renewal application has been filed and there has been no change in the applicable building code negatively affecting the performance of this product.

TERMINATION of this NOA will occur after the expiration date or if there has been a revision or change in the materials, use, and/ or manufacture of the product or process. Misuse of this NOA as an endorsement of any product, for sales, advertising or any other purposes shall automatically terminate this NOA. Failure to comply with any section of this NOA shall be cause for termination and removal of NOA.

ADVERTISEMENT: The NOA number preceded by the words Miami-Dade County, Florida, and followed by the expiration date may be displayed in advertising literature. If any portion of the NOA is displayed, then it shall be done in its entirety.

INSPECTION: A copy of this entire NOA shall be provided to the user by the manufacturer or its distributors and shall be available for inspection at the job site at the request of the Building Official.

This NOA **renews NOA No. 12-0308.40** and consists of this page 1 and evidence pages E-1, E-2 and E-3, as well as approval document mentioned above.

The submitted documentation was reviewed by **Jaime D. Gascon, P. E.**

MIAMI-DADE COUNTY APPROVED

JGascon 9/17/14

NOA No. 14-0722.13
Expiration Date: September 16, 2019
Approval Date: September 25, 2014
Page 1

E.S. Windows, LLC

NOTICE OF ACCEPTANCE: EVIDENCE SUBMITTED

A. DRAWINGS

1. Manufacturer's die drawings and sections.
   (Submitted under previous NOA No. 12–0308.40)
2. Drawing No. **W04–51**, titled "Series–3000 Alum. Outswing French Doors (L.M.I.)", sheets 01, 02, 2.1, 2.2 through 06 & 6.1 of 10, dated 06/10/04 with revision "G" dated 02/24/12, prepared by Al–Farooq Corporation, signed and sealed by Javad Ahmad, P. E.
   (Submitted under previous NOA No. 12–0308.40)

B. TESTS

1. Test reports on: 1) Air Infiltration Test, per FBC, TAS 202–94
   2) Uniform Static Air Pressure Test, Loading per FBC, TAS 202–94
   3) Water Resistance Test, per FBC, TAS 202–94
   4) Large Missile Impact Test per FBC, TAS 201–94.
   5) Cyclic Wind Pressure Loading per FBC, TAS 203–94
   6) Forced Entry Test, per FBC 2411.3.2.1, and TAS 202–94

   along with marked–up drawings and installation diagram of aluminum outswing French door w/ Sidelites, prepared by Fenestration Testing Laboratory, Inc., No. **FTL–5938R**, dated 03/29/10, revised, reviewed, signed and sealed by Jorge A. Causo, P. E.
   (Submitted under previous NOA No. 09–1217.03)
2. Test reports on: 1) Air Infiltration Test, per FBC, TAS 202–94
   2) Uniform Static Air Pressure Test, Loading per FBC, TAS 202–94
   3) Water Resistance Test, per FBC, TAS 202–94
   4) Large Missile Impact Test per FBC, TAS 201–94.
   5) Cyclic Wind Pressure Loading per FBC, TAS 203–94
   6) Forced Entry Test, per FBC 2411.3.2.1, and TAS 202–94

   along with marked–up drawings and installation diagram of aluminum outswing French door w/ Sidelites, prepared by Fenestration Testing Laboratory, Inc., No. **FTL–5938**, dated 10/01/09, signed and sealed by Julio E. Gonzales, P. E.
   (Submitted under previous NOA No. 09–0825.04)
3. Test reports on: 1) Large Missile Impact Test per FBC, TAS 201–94
   2) Cyclic Wind Pressure Loading per FBC, TAS 203–94

   along with marked–up drawings and installation diagram of aluminum outswing French door w/ Sidelites, prepared by Fenestration Testing Laboratory, Inc., Test Report No. **FTL–5164**, dated 08/01/07, signed and sealed by Carlos S. Roinda, P. E.
   (Submitted under previous NOA No. 07–0828.09)

Jaime D. Gascon, P. E.
Product Control Section Supervisor
NOA No. 14–0722.13
Expiration Date: September 16, 2019
Approval Date: September 25, 2014

NOTICE OF ACCEPTANCE: EVIDENCE SUBMITTED

B. TESTS (CONTINUED)

4. Test reports on: 1) Air Infiltration Test, per FBC, TAS 202–94
   2) Uniform Static Air Pressure Test, Loading per FBC, TAS 202–94
   3) Water Resistance Test, per FBC, TAS 202–94

   along with marked–up drawings and installation diagram of aluminum outswing French door w/ Sidelites, prepared by Fenestration Testing Laboratory, Inc., Test Reports No.'s **FTL–3947** and **FTL–3955**, both dated 02/04/04, signed and sealed by Edmundo J. Largaespada, P. E.
   (Submitted under previous NOA No. 04–0712.02)

C. CALCULATIONS

1. Anchor verification calculations and structural analysis, complying with **FBC–2010**, prepared by Al–Farooq Corporation, dated 03/01/12, signed and sealed by Javad Ahmad, P. E.
   (Submitted under previous NOA No. 12–0308.40)
2. Anchor verification calculations and structural analysis, complying with **FBC–2007**, prepared by Al–Farooq Corporation, dated 12/08/09 signed and sealed by Arshad Viqar, P. E.
   (Submitted under previous NOA No. 09–1217.03)
3. **Glazing complies with ASTM E1300–04**

D. QUALITY ASSURANCE

1. Miami–Dade Department of Regulatory and Economic Resources (RER).

E. MATERIAL CERTIFICATIONS

1. Notice of Acceptance No. **13–0129.27** issued to **E.I. DuPont DeNemours & Co., Inc.** for their **"DuPont Butacite® PVB Interlayer"** dated 04/11/13, expiring on 12/11/16.
2. Notice of Acceptance No. **11–0624.02** issued to **E.I. DuPont DeNemours & Co.**, Inc. for their **"DuPont SentryGlas® Interlayer"** dated 08/25/11, expiring on 01/14/17.

F. STATEMENTS

1. Department of State Certification of **E.S. WINDOWS, LLC** as a limited liability company, active and organized under the laws of the State of Florida, dated 03/03/14 and signed by Kurt S. Browning, Secretary of State.
2. Statement letter of no financial interest, conformance to and complying with **FBC–2010**, issued by Al–Farooq Corporation, dated 02/24/12, signed and sealed by Javad Ahmad, P. E.
   (Submitted under previous NOA No. 12–0308.40)

Jaime D. Gascon, P. E.
Product Control Section Supervisor
NOA No. 14–0722.13
Expiration Date: September 16, 2019
Approval Date: September 25, 2014

F. STATEMENTS (CONTINUED)

3. Distributor Agreement between Energia Solar, S.A., Barranquilla, Columbia and E.S. Windows, LLC, Florida USA, dated 10/20/10, signed by Ms. Carla G. Torrente and Andres Chamorro, respectively.
(Submitted under previous NOA No. 12–0308.40)
4. Laboratory compliance letter for Test Report No. **FTL–5938R**, issued by Fenestration Testing Laboratory, Inc., dated 03/29/10, revised, reviewed, signed and sealed by Jorge A. Causo, P. E.
(Submitted under previous NOA No. 09–1217.03)
5. Proposal No. **09–0225**, issued by the Product Control, dated 06/17/09, signed by Ishaq Chanda, P. E.
(Submitted under previous NOA No. 09–1217.03)
6. Laboratory compliance letter for Test Report No. **FTL–5938**, issued by Fenestration Testing Laboratory, Inc., dated 10/01/09, signed and sealed by Julio E. Gonzales, P. E.
(Submitted under previous NOA No. 09–0825.04)
7. Proposal No. **06–0411R**, issued by the Product Control, dated 07/31/07, revised and signed by Ishaq Chanda, P. E.
(Submitted under previous NOA No. 09–0825.04)
8. Laboratory compliance letter for Test Report No. **FTL–5164**, issued by Fenestration Testing Laboratory, Inc., dated 08/01/07, signed and sealed by Carlos S. Roinda, P. E.
(Submitted under previous NOA No. 07–0828.09)
9. Proposal No. **06–0411**, issued by the Product Control, dated 02/06/06, signed by Ishaq Chanda, P. E.
(Submitted under previous NOA No. 07–0828.09)
10. Laboratory compliance letter for Test Reports No.'s **FTL–3947** and **FTL–3955**, issued by Fenestration Testing Laboratory, Inc., both dated 02/04/04, signed and sealed by Edmundo J..Largaespada, P. E.
(Submitted under previous NOA No. 04–0712.02)

G. OTHERS

1. Notice of Acceptance No. **12–0308.40**, issued to ES Windows, LLC for their Series "**3000 Aluminum Outswing French Doors w/ wo Sidelites – L.M.I.**", approved on 05/24/12 and expiring on 09/16/14.

Jaime D. Gascon, P. E.
Product Control Section Supervisor
NOA No. 14–0722.13
Expiration Date: September 16, 2019
Approval Date: September 25, 2014

CMB

05·19·15

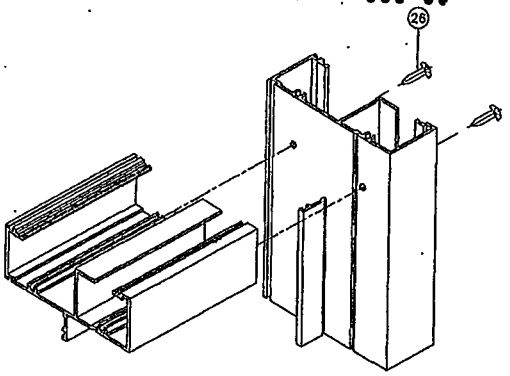

FRAME TOP CORNER

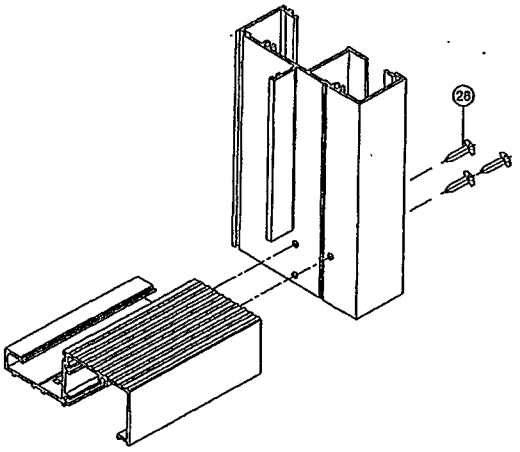

FRAME BOTTOM CORNER

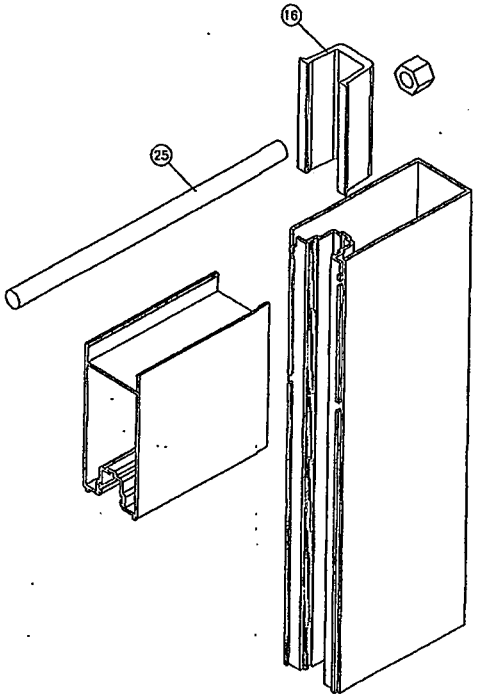

DOOR LEAF CORNER

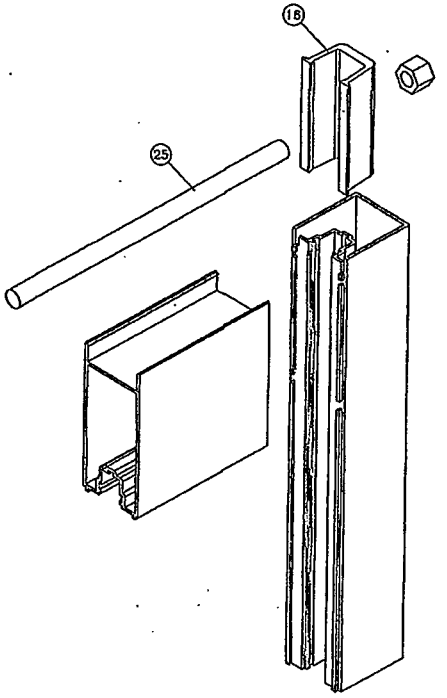

STATIONARY PANEL OR SIDELITE CORNER

PRODUCT REVIEWED
as complying with the Florida
Building Code
Acceptance No 12-0308.40
Expiration Date Sept 16, 2014
By
Miami Dade Product Control

PRODUCT RENEWED
as complying with the Florida
Building Code
Acceptance No 14-0722.13
Expiration Date 09/16/2019
By
Miami Dade Product Control

Engr: JAVAD AHMAD
CIVIL
FLA. PE # 70592
C.A.N. 3538
MAY 17 2012

AL-FAROOQ CORPORATION
ENGINEERS & PRODUCT DEVELOPMENT
1235 S.W. 87 AVE
MIAMI, FLORIDA 33174
TEL. (305) 264-8100 FAX. (305) 262-6978
COMP-ANL W04-51ESW

SERIES-3000 ALUM OUTSWING FRENCH DOOR (L.M.I.)

E.S. WINDOWS, LLC
5220 N.W. 72 AVE. BAY #4
MIAMI, FL 33166
TEL. (305) 624-7775 FAX. (305) 624-7777

revisions:

no	date	by	description
D	08.14.09		NO CHANGE THIS SHEET
E	11.23.09		GENERAL REV.
F	03.12.10		REV. PER BCDD COMMENTS
G	02.24.12		NO CHANGE THIS SHEET

date: 08-10-04
scale: 3/8" = 1"
dr. by: HAMID
chk. by:

drawing no. W04-51

sheet 7 of 7

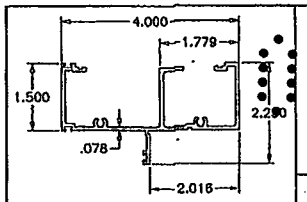

① ② FRAME HEAD/JAMB

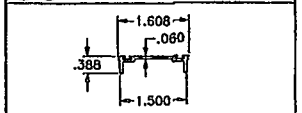

⑮ WEATHERSTRIP ADAPTER

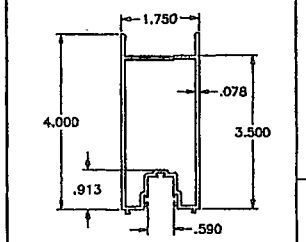

⑥ TOP/BOTTOM RAIL

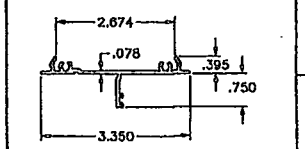

④ SIDELITE ADAPTER

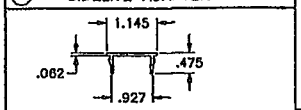

⑭ SILL COVER

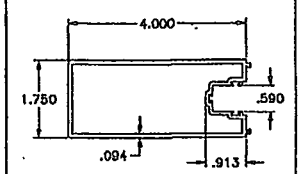

⑦ HINGE STILE

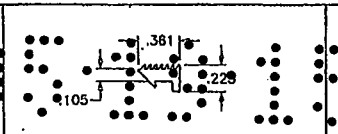

㉛ WEDGE GASKET (SCALE 1:1)

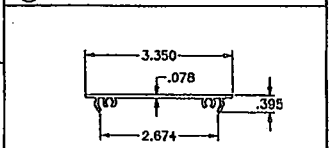

⑤ SHEAR PLATE

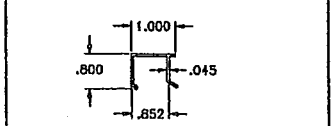

⑬ JAMB TRIM (OPTIONAL)

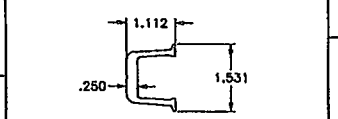

⑯ PANEL CLAMP

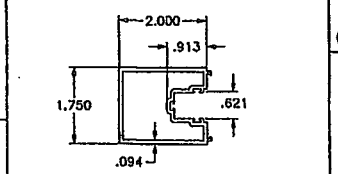

⑩ SIDE LITE STILE

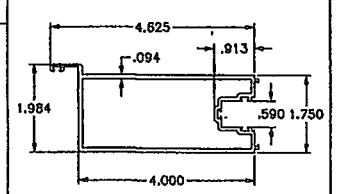

⑧ ⑨ LOCK STILE/KEEPER STILE

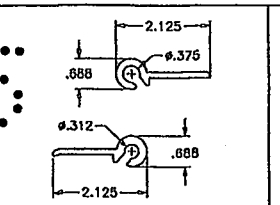

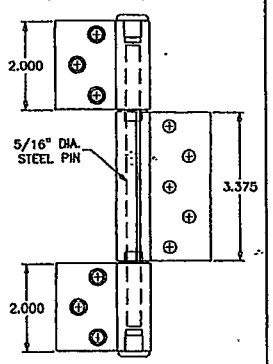

⑰ 3 PIECE HINGE

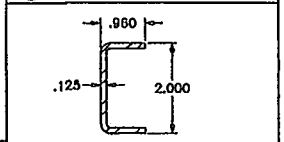

㉗ MULLION REINF. CHANNEL

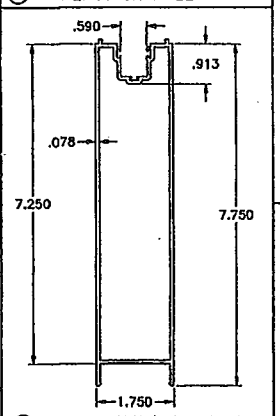

⑥A HI-PROFILE BOTTOM RAIL

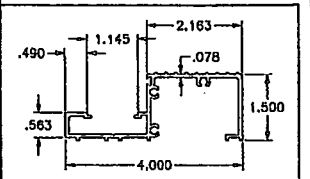

③ FRAME SILL (STD.)

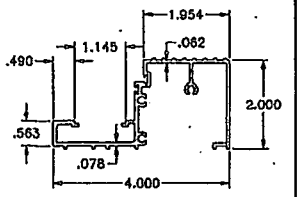

③A FRAME SILL (HI-RISE)

PRODUCT RENEWED
as complying with the Florida
Building Code
Acceptance No 14-0722.13
Expiration Date 09/16/2019
By
Miami Dade Product Control

PRODUCT REVISED
as complying with the Florida
Building Code
Acceptance No 12-0308.40
Expiration Date 9/16/19
By
Miami Dade Product Control

Eng/: JAVAD AHMAD
CIVIL
FLA. PE # 70592
C.A.N. 3538
MAY 27 2012

AL-FAROOQ CORPORATION
ENGINEERS & PRODUCT DEVELOPMENT
1235 S.W. 67 AVE
MIAMI, FLORIDA 33174
TEL. (305) 264-8100 FAX. (305) 262-6978
COMP-ANL\W04-51ESW

SERIES-3000 ALUM OUTSWING FRENCH DOOR (J.M.L.)

E.S. WINDOWS, LLC
5220 N.W. 72 AVE. BAY #4
MIAMI, FL. 33166
TEL. (305) 624-7775 FAX. (305) 624-7777

revisions:

no	date	by	description
D	08.14.09		NO CHANGE THIS SHEET
E	11.23.09		GENERAL REV.
F	03.12.10		REV. PER BCCO COMMENTS
G	02.24.12		NO CHANGE THIS SHEET

date: 06-10-04
scale: 3/8" = 1"
dr. by: HAMID
chk. by:

drawing no.
W04-51
sheet 6.1 of 7

CMB

05·19·15

ITEM #	PART #	QUANTITY	DESCRIPTION	MATERIAL	MANF./SUPPLIER/REMARKS
1	ES3001-1	1	FRAME HEAD	6063-T6	–
2	ES3001-2	2	DOOR FRAME JAMB	6063-T6	–
3	ES3002-1	1	FRAME SILL (STANDARD)	6063-T5	–
3A	ES3025	1	FRAME SILL (HI-RISE)	6063-T5	–
4	ES3003-1	AS REQD.	SIDELITE ADAPTER	6063-T6	–
5	ES3004	AS REQD.	SHEAR PLATE @ ANCHOR LOCATIONS	6063-T6	3" LONG
6	ES3005-1	2/ LEAF	TOP AND BOTTOM RAIL	6063-T5	–
6A	ES3024	2/ LEAF	HI-PROFILE BOTTOM RAIL	6063-T5	–
7	ES3006-1	1/ LEAF	DOOR LEAF JAMB – HINGE SIDE	6063-T5	–
8	ES3007-1	1/ LEAF	DOOR LEAF – LOCK SIDE	6063-T6	–
9	ES3007-2	1/ LEAF	DOOR LEAF – KEEPER SIDE	6063-T6	–
10	ES3008-1	AS REQD.	SIDELITE STILE	6063-T5	–
11	FB-1202-914	2/ LEAF	EXPOSED FLUSH BOLT	STEEL	SULLIVAN & ASSOCIATES
12	FB-1202-914	2/ LEAF	CONCEALED FLUSH BOLT	STEEL	SULLIVAN & ASSOCIATES
13	ES3011	AS REQD.	JAMB TRIM	6063-T5	OPTIONAL
14	ES3012	1	SILL COVER	6063-T6	–
15	ES3013	2/ LEAF	WEATHERSTRIP ADAPTER	6063-T5	–
16	ES3014-1	4/ PANEL	PANEL CLAMP	6063-T6	–
17	ES3003-3	3/ LEAF	HINGE ASSEMBLY	6063-T6	SEE SHEET 2
17A	–	2/ LEAF	PIVOT HINGES	–	SEE SHEET 2
19	–	–	DOOR LOCK (SAVANNAH 201SL)	–	YALE
20	–	–	DEAD BOLT LOCK (PREMIER)	–	YALE
21	W22321NG	AS REQD.	FIN-SEAL PILE W'STRIPPING	–	ULTRAFAB
22	ES3020	AS REQD.	BULB WEATHERSTRIPPING	VINYL	AT SIDELITE PANELS
23	–	1/ HINGE	HINGE REINFORCING BAR	ALUMINUM	1-1/4"X1/8"X4-1/4" LONG
24	–	AS REQD.	HINGE REINFORCING BAR	ALUMINUM	1/8" THK. X 7-7/8" LONG
25	–	2/ LEAF	3/8" DIA. THREADED ROD W/ NUTS	STEEL	–
26	–	AS REQD.	FRAME ASSY. SCREWS	–	#10 PAN HEAD SMS
27	–	AS REQD.	MULLION REINFORCING CHANNEL	A36 STEEL	–
28	ES4014	AS REQD.	BOTTOM RAIL GLASS STOP	NEOPRENE	–
29	ES4019	AS REQD.	PANEL SILICONE STOP	NEOPRENE	–
30	–	AS REQD.	3/8" DIA. X 1/8" HT. BUMPER	SILICONE	FRANK LOWE RUBBER CO.
31	ES4013	AS REQD.	WEDGE GASKET	EPDM	DUROMETER 73±3 SHORE A
32	ES3022	2/ STILE	FLUSH BOLT BRACKET	6063-T5	–
33	–	2/ BKT.	BRACKET INSTALLATION SCREWS	–	#10 X 1" FH SMS
34	Q/LON	AS REQD.	DOOR PANEL W'STRIPPING	–	SCHLEGEL

PRODUCT REVISED
as complying with the Florida
Building Code
Acceptance No 12-0308.40
Expiration Date 9/16/14
By
Miami Dade Product Control

PRODUCT RENEWED
as complying with the Florida
Building Code
Acceptance No 14-0722.13
Expiration Date 09/16/2019
By
Miami Dade Product Control

Engr JAVAD AHMAD
CIVIL
FLA. PE # 70502
C.A.N. 3338
MAY 2012

AL-FAROOQ CORPORATION
ENGINEERS & PRODUCT DEVELOPMENT
1225 S.W. 87 AVE
MIAMI, FLORIDA 33174
TEL. (305) 264-8100 FAX. (305) 262-6378
COMP-ANL\W04-51ESW

SERIES-3000 ALUM OUTSWING FRENCH DOOR (L.H.I.)

E.S. WINDOWS, LLC
5220 N.W. 72 AVE. BAY #4
MIAMI, FL 33166
TEL. (305) 624-7775 FAX. (305) 624-7777

revisions:

no	date	by	description
D	08.14.09		NO CHANGE THIS SHEET
E	11.23.09		GENERAL REV.
F	03.12.10		REV. PER BCCO COMMENTS
G	02.24.12		NO CHANGE THIS SHEET

date: 06-10-04
scale: 3/8" = 1"
dr. by: HAMID
chk. by:

drawing no. W04-51

sheet 6 of 7

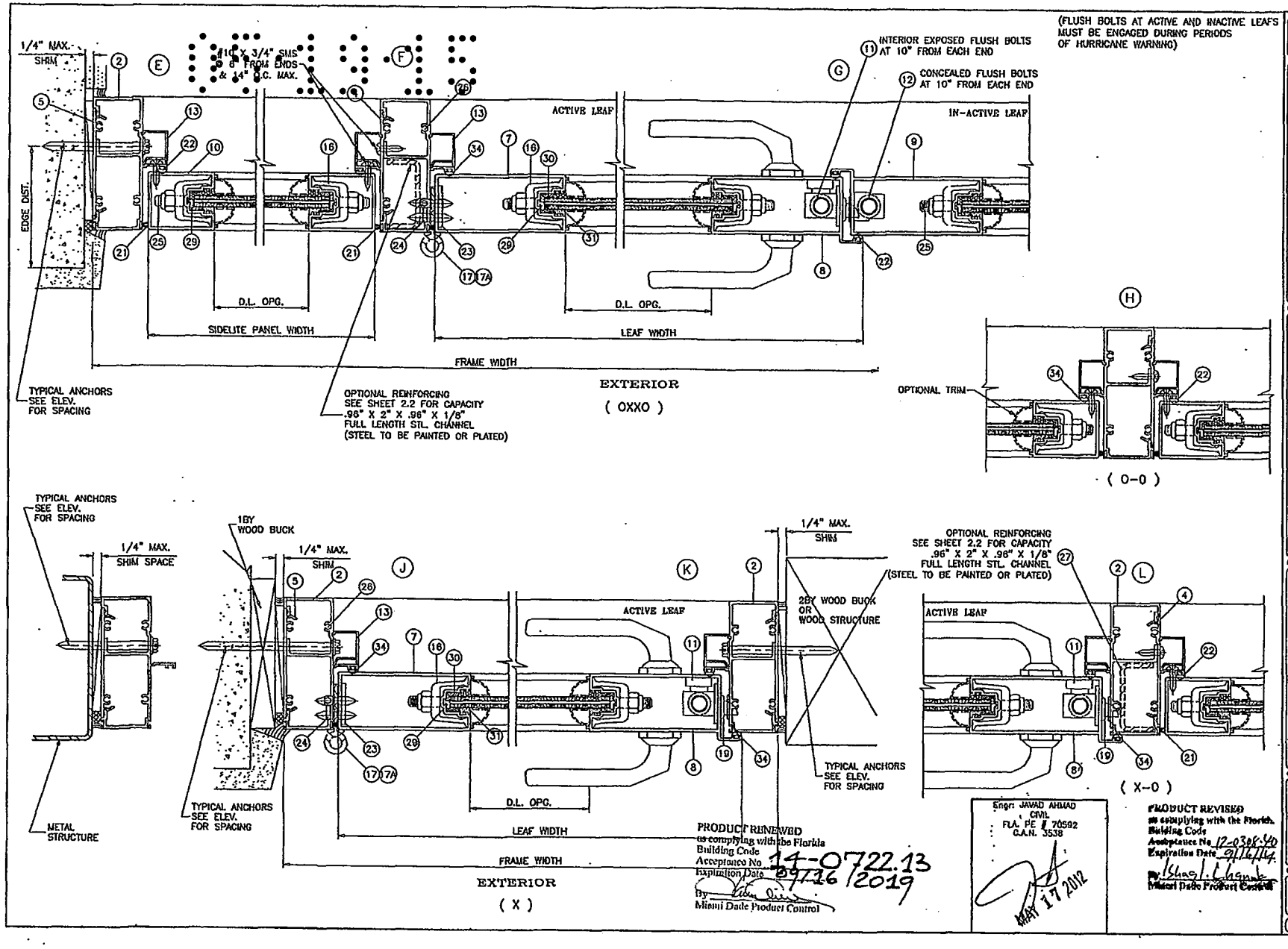

PRODUCT RENEWED as complying with the Florida Building Code Acceptance No 14-0722.13 Expiration Date 09/16/2019 By Miami Dade Product Control

Engr: JAVAD AHMAD CIVIL FLA. PE # 70592 C.A.N. 3538 MAY 17 2012

PRODUCT REVISED as complying with the Florida Building Code Acceptance No 12-0308.40 Expiration Date 9/16/14 By Miami Dade Product Control

AL-FAROOQ CORPORATION
ENGINEERS & PRODUCT DEVELOPMENT
1235 S.W. 87 AVE
MIAMI, FLORIDA 33174
TEL. (305) 264-8100 FAX. (305) 262-8978
COMP-ANL\W04-51ESW

SERIES-3000 ALUM OUTSWING FRENCH DOOR (L.M.I.)

E.S. WINDOWS, LLC
5220 N.W. 72 AVE. BAY #4
MIAMI, FL. 33166
TEL. (305) 624-7775 FAX. (305) 624-7777

revisions:

no	date	by	description
D	08.14.09		NO CHANGE THIS SHEET
E	11.21.09		GENERAL REV.
F	03.12.10		REV. PER BCCO COMMENTS
G	02.24.12		NO CHANGE THIS SHEET

date: 06-10-04
scale: 3/8" = 1"
dr. by: HAMID
chk. by:

drawing no. W04-51

sheet 5 of 7

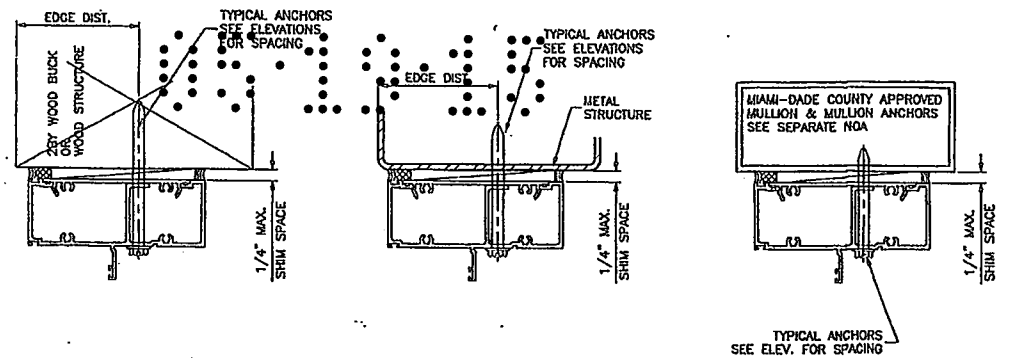

WOOD BUCKS AND METAL STRUCTURE NOT BY E.S. WINDOWS MUST SUSTAIN LOADS IMPOSED BY GLAZING SYSTEM AND TRANSFER THEM TO THE BUILDING STRUCTURE.

TYPICAL ANCHORS: SEE ELEV. FOR SPACING

1/4" DIA. ULTRACON BY 'ELCO' (Fu=177 KSI, Fy=155 KSI)

INTO 2BY WOOD BUCKS OR WOOD STRUCTURES
1-3/8" MIN. PENETRATION INTO WOOD

THRU 1BY BUCKS INTO CONC. OR MASONRY
1-1/4" MIN. EMBED INTO CONC. OR MASONRY

DIRECTLY INTO CONC. OR MASONRY
1-1/4" MIN. EMBED INTO CONC. OR MASONRY

#14 SMS OR SELF DRILLING SCREWS (GRADE 2 CRS)

INTO MIAMI-DADE COUNTY APPROVED MULLIONS (MIN. THK. = 1/8")

INTO METAL STRUCTURES
STEEL : 1/8" THK. MIN. (Fy = 36 KSI MIN.)
ALUMINUM : 1/8" THK. MIN. (6063-T5 MIN.)
(STEEL IN CONTACT WITH ALUMINUM TO BE PLATED OR PAINTED)

TYPICAL EDGE DISTANCE

INTO CONCRETE AND MASONRY = 2-1/2" MIN.
INTO WOOD STRUCTURE = 1" MIN.
INTO METAL STRUCTURE = 3/4" MIN.

CONCRETE AT HEAD, SILL OR JAMBS f'c = 3000 PSI MIN.
C-90 HOLLOW/FILLED BLOCK AT JAMBS f'm = 2000 PSI MIN.

SEALANTS:

ALL JOINTS AND FRAME CONNECTIONS SEALED WITH WHITE/ALUMINUM COLORED SILICONE.

PRODUCT REVISED
as complying with the Florida Building Code
Acceptance No 12-0308.40
Expiration Date 9/16/14
By [signature]
Miami Dade Product Control

PRODUCT RENEWED
as complying with the Florida Building Code
Acceptance No 14-0722.13
Expiration Date 09/16/2019
By [signature]
Miami Dade Product Control

Engr. JAVAD AHMAD
CIVIL
FLA. PE # 70592
C.A.H. 3538
MAY 1 7 2012

AL-FAROOQ CORPORATION
ENGINEERS & PRODUCT DEVELOPMENT
1235 S.W. 87 AVE
MIAMI, FLORIDA 33174
TEL. (305) 264-9100 FAX. (305) 262-6978
COMP-ANL\W04-51ESW

SERIES-3000 ALUM OUTSWING FRENCH DOOR (L.M.I.)

E.S. WINDOWS, LLC
5220 N.W. 72 AVE. BAY #4
MIAMI, FL. 33166
TEL. (305) 624-7775 FAX. (305) 624-7777

revisions:			
no	date	by	description
D	06.14.05		UPDATED FOR 2007 FBC
E	11.23.06		GENERAL REV.
F	03.12.10		REV. PER BCCO COMMENTS
G	02.24.12		NO CHANGE THIS SHEET

date: 06-10-04
scale: 3/8" = 1"
dr. by: HAMID
chk. by:

drawing no. W04-51

sheet 4 of 7

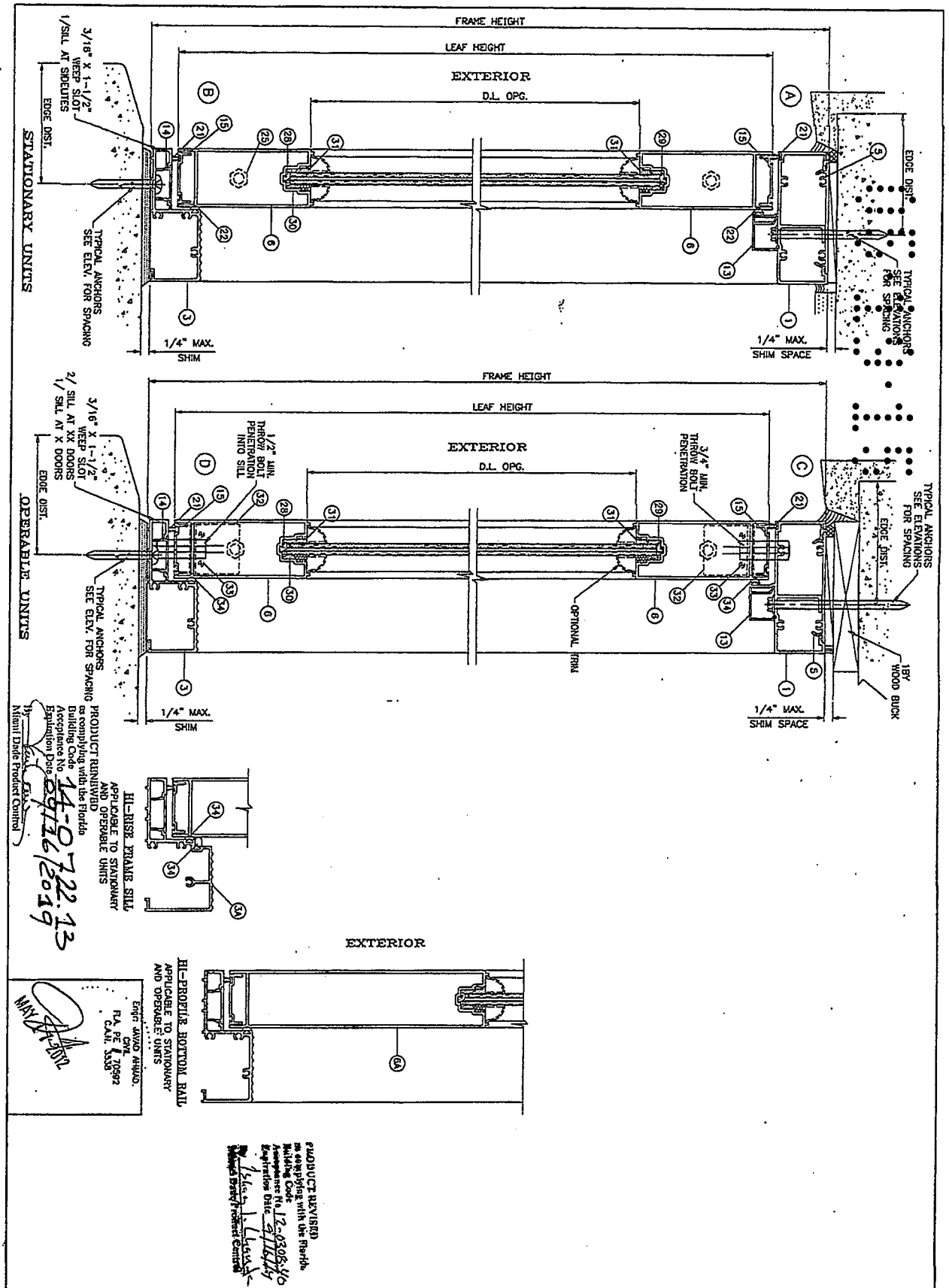

date: 05-10-04	revisions:		
scale: 3/8" = 1"	no	date	by	description
dr. by: HAMID	D	06.14.09		NO CHANGE THIS SHEET
chk. by:	E	11.23.09		GENERAL REV.
	F	03.12.10		REV. PER BCCO COMMENTS
	G	02.24.12		NO CHANGE THIS SHEET

drawing no. W04-51

sheet 3 of 7

SERIES-3000 ALUM OUTSWING FRENCH DOOR (L.M.I.)

E.S. WINDOWS, LLC
5220 N.W. 72 AVE. BAY #4
MIAMI, FL. 33166
TEL. (305) 624-7775 FAX. (305) 624-7777

AL-FAROOQ CORPORATION
ENGINEERS & PRODUCT DEVELOPMENT
1235 S.W. 87 AVE
MIAMI, FLORIDA 33174
TEL. (305) 264-8100 FAX. (305) 262-6978

COMP-ANL\W04-51ESW

CMB

MULLION

DESIGN LOAD CAPACITY – PSF				
		DOOR TO SIDELITE MULLION		SIDELITE TO SIDELITE MULL
SIDELITE WIDTH INCHES	FRAME HEIGHT FT./IN.	UNREINFORCED EXT.(+)/INT.(–)	REINFORCED EXT.(+)/INT.(–)	REINFORCED EXT.(+)/INT.(–)
24	6/8	80.0	80.0	90.0
27		80.0	80.0	90.0
30		80.0	80.0	90.0
33		80.0	80.0	90.0
36		80.0	80.0	90.0
39		80.0	80.0	90.0
42		80.0	80.0	90.0
24	7/0	80.0	80.0	90.0
27		80.0	80.0	90.0
30		80.0	80.0	90.0
33		80.0	80.0	90.0
36		80.0	80.0	90.0
39		80.0	80.0	90.0
18	8/0	78.9	80.0	90.0
21		74.8	80.0	90.0
24		71.1	80.0	90.0
27		67.9	80.0	90.0
30		65.0	80.0	90.0
33		62.4	78.9	90.0
36		60.1	76.0	90.0

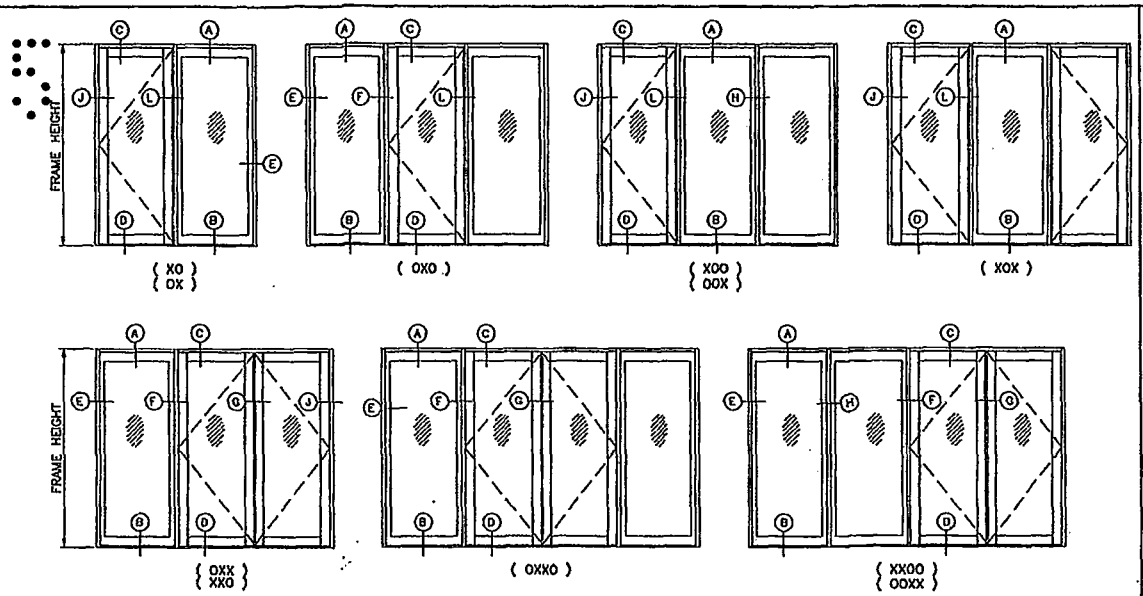

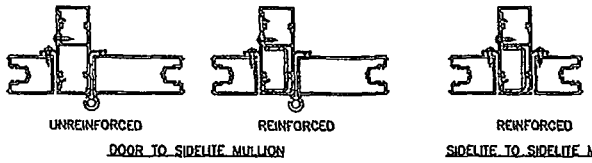

NOTE:
FOR DOORS CAPACITY SEE SHEET 2
FOR SIDELITE CAPACITIES SEE SHEET 2.1.
FOR SIDELITE MULLION CAPACITY SEE CHART ABOVE
LOWER VALUES FROM DOORS, SIDELITE OR MULLION CHART WILL APPLY TO ENTIRE SYSTEM.

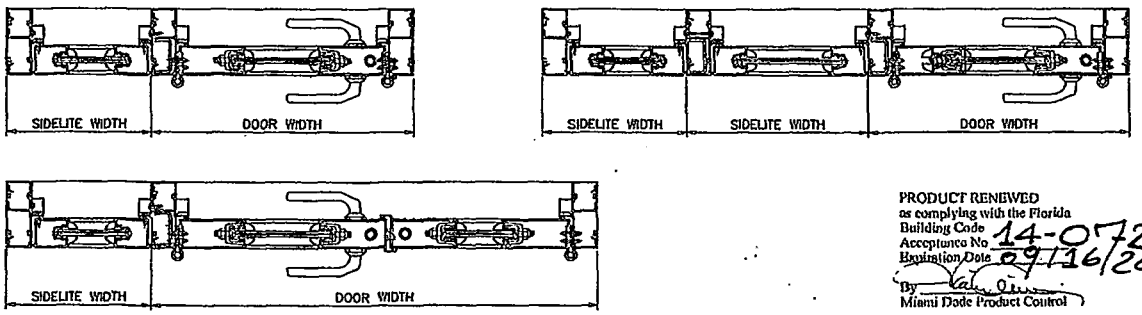

PRODUCT REVISED
as complying with the Florida
Building Code
Acceptance No 12-0308.90
Expiration Date 9/16/14
By
Miami Dade Product Control

PRODUCT RENEWED
as complying with the Florida
Building Code
Acceptance No 14-0722.13
Expiration Date 09/16/2019
By
Miami Dade Product Control

Engr: JAVAD AHMAD
CIVIL
FLA. PE # 70592
C.A.N. 3538
MAY 17 2012

AL-FAROOQ CORPORATION
ENGINEERS & PRODUCT DEVELOPMENT
1235 S.W. 87 AVE
MIAMI, FLORIDA 33174
TEL. (305) 264-5400 FAX. (305) 262-6978
COMP-ANL\W04-51ESW

SERIES-3000 ALUM. OUTSWING FRENCH DOOR (L.M.L.)

E.S. WINDOWS, LLC
5220 N.W. 72 AVE. BAY #4
MIAMI, FL. 33166
TEL. (305) 624-7775 FAX. (305) 624-7777

revisions:			
no	date	by	description
D	08.14.08		UPDATED FOR 2007 FBC
E	11.23.09		GENERAL REV.
F	03.12.10		REV. PER BCCO COMMENTS
G	02.24.12		NO CHANGE THIS SHEET

date: 06-10-04
scale: 1/2"=1'-0"
dr. by: HAMID
chk. by:

drowing no.
W04-51

sheet 2.2 of 7

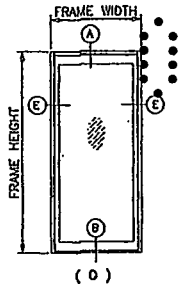

STATIONARY PANEL (O) OR SIDELITES

DESIGN LOAD CAPACITY – PSF							
FRAME HEIGHT FT./IN.	FRAME WIDTH INCHES	GLASS TYPES					
		'A', 'B', 'D'		'C', 'E'		'F'	
		EXT. (+)	INT. (–)	EXT. (+)	INT. (–)	EXT. (+)	INT. (–)
6/8	42	70.0	80.0	90.0	90.0	90.0	90.0
7/0	39	70.0	80.0	90.0	90.0	90.0	90.0
8/0	36	70.0	80.0	87.6	87.6	90.0	90.0

WATER INFILTRATION LIMITATIONS:

WHERE WATER INFILTRATION RESISTANCE IS REQUIRED
LIMIT EXTERIOR LOADS FOR ALL CASES AS FOLLOWS
STD. SILL = +70.0 PSF
HI-RISE SILL = +90.0 PSF.

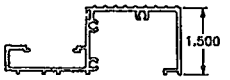

STD. SILL

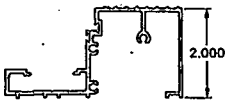

HI-RISE SILL

D.L. OPENINGS:
D.L.O. HEIGHT = LEAF HEIGHT – 8.1875" (STD. BOT. RAIL)
D.L.O. HEIGHT = LEAF HEIGHT – 11.9375" (HI RISE BOT. RAIL)
D.L.O. WIDTH = PANEL WIDTH – 4.000"

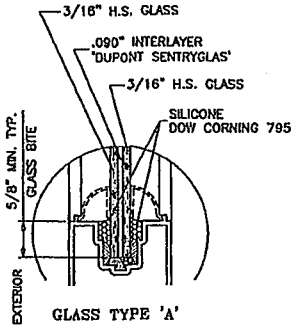

GLASS TYPE 'A'

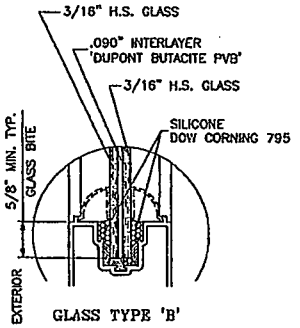

GLASS TYPE 'B'

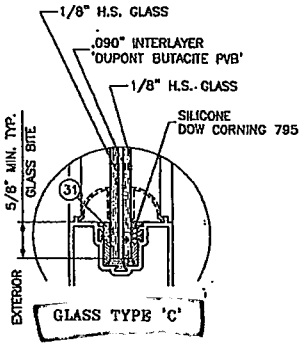

GLASS TYPE 'C'

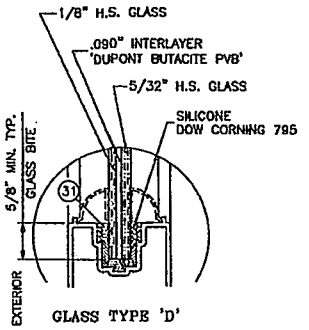

GLASS TYPE 'D'

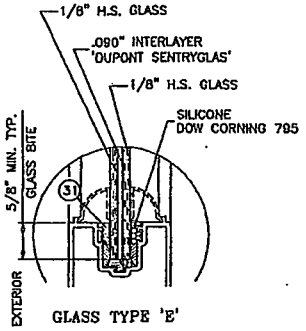

GLASS TYPE 'E'

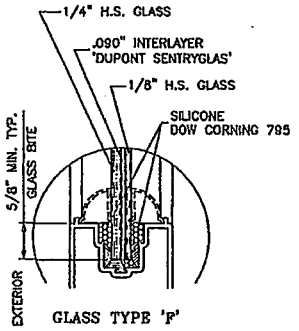

GLASS TYPE 'F'

GLAZING OPTIONS

PRODUCT REVISED
as complying with the Florida
Building Code
Acceptance No 12-0308.40
Expiration Date 9/16/19
By
Miami Dade Product Control

PRODUCT RENEWED
as complying with the Florida
Building Code
Acceptance No 14-0722.13
Expiration Date 09/16/2019
By
Miami Dade Product Control

NOTE:
GLASS CAPACITIES ON THIS SHEET ARE BASED ON ASTM E1300-04 (3 SEC. GUSTS) AND FLORIDA BUILDING COMMISSION DECLARATORY STATEMENT DCA05-DEC-219

Engr: JAWAD AHMAD
CIVIL
FLA: PE # 70592
C.A.N. 3638
MAY 1 2012

AL-FAROOQ CORPORATION
ENGINEERS & PRODUCT DEVELOPMENT
1235 S.W. 87 AVE
MIAMI, FLORIDA 33174
TEL (305) 264-3100 FAX (305) 262-6973
COMP-ANL\W04-51ESW

SERIES-3000 ALUM OUTSWING FRENCH DOOR (L.M.I.)

E.S. WINDOWS, LLC
5220 N.W. 72 AVE. BAY #4
MIAMI, FL. 33166
TEL (305) 624-7775 FAX. (305) 624-7777

revisions:			
no	date	by	description
D	08.14.09		UPDATED FOR 2007 FBC
E	11.2.09		GENERAL REV.
F	03.12.10		REV. PER 3000 COMMENTS
G	02.24.12		UPDATED TO 2010 FBC

date: 06-10-04
scale: 1/2"=1'-0"
dr. by: HANID
chk. by:

drawing no. W04-51

sheet 2 of 7

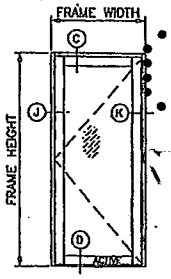

'X' DOORS

FRAME HEIGHT INCHES	FRAME WIDTH INCHES	DESIGN LOAD CAPACITY – PSF (GLASS AND HARDWARE OPTIONS)													
		GLASS TYPES						HINGES				LOCKS			
		'A', 'B' & 'D'		'C' & 'E'		'F'		OPTION '1'		OPTION '2'		OPTION '1'		OPTION '2'	
		EXT. (+)	INT. (–)	EXT. (+)	INT. (–)	EXT. (+)	INT. (–)	EXT. (+)	INT. (–)	EXT. (+)	INT. (–)	EXT. (+)	INT. (–)	EXT. (+)	INT. (–)
95-3/4	37-1/2	70.0	80.0	90.0	90.0	100.0	120.0	90.0	90.0	100.0	120.0	70.0	80.0	100.0	120.0
	39-5/8	–	–	90.0	90.0	100.0	120.0	90.0	90.0	100.0	120.0	70.0	80.0	100.0	120.0

NOTE:
LOWEST VALUE SELECTED FROM OPTION WILL APPLY.

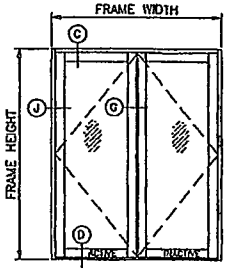

'XX' DOORS

FRAME HEIGHT INCHES	FRAME WIDTH INCHES	DESIGN LOAD CAPACITY – PSF (GLASS AND HARDWARE OPTIONS)													
		GLASS TYPES						HINGES				LOCKS			
		'A', 'B' & 'D'		'C' & 'E'		'F'		OPTION '1'		OPTION '2'		OPTION '1'		OPTION '2'	
		EXT. (+)	INT. (–)	EXT. (+)	INT. (–)	EXT. (+)	INT. (–)	EXT. (+)	INT. (–)	EXT. (+)	INT. (–)	EXT. (+)	INT. (–)	EXT. (+)	INT. (–)
95-3/4	71-3/4	70.0	80.0	90.0	90.0	90.0	90.0	90.0	90.0	90.0	90.0	70.0	80.0	90.0	90.0
	76	–	–	90.0	90.0	90.0	90.0	90.0	90.0	90.0	90.0	70.0	80.0	90.0	90.0

HINGES:

OPTION #1:

THREE PIECE ALUM BUTT HINGE BY 'E.S. WINDOWS'
(3) HINGES PER LEAF AT 11" FROM TOP & BOTTOM
AND AT MIDSPAN
FASTENED TO DOOR FRAME AND LEAF WITH
#10 X 1" FH SMS
(6) SCREWS AT FRAME, (5) SCREWS AT LEAF

OPTION #2:

FACE MOUNT 2 WING PIVOT HINGE BY 'MASTER ACCESSORIES'
WITH EXTRUDED ALUMINUM BASE, DIE CAST ALUMINUM
COVER PLATES, ST. STEEL PIVOTS AND GALV. STEEL
BRUSHES AND SCREWS
(2) HINGES PER LEAF AT 12" FROM TOP & BOTTOM
FASTENED TO DOOR FRAME AND LEAF WITH
5/16-24 X 1" FH MS (2) PER WING

LOCKING HARDWARE:

ACTIVE LEAF:

OPTION #1:

SURFACE MOUNT DEAD BOLT LOCK BY 'YALE'
AT 45" FROM BOTTOM, KEY OPERATED ON
EXTERIOR AND THUMB TURN ON INTERIOR
FASTENED TO ACTIVE LEAF LOCK STILE WITH
(2) 1/4-28 X 2-1/2" OH MS
LEVER TYPE METALLIC HANDLE AT 37" FROM
BOTTOM, FASTENED TO ACTIVE LEAF LOCK STILE
WITH (2) #8-32 X 1-3/4" PH MS.

CONCEALED FLUSH BOLTS BY 'SULLIVAN & ASSOC.'
MANUALLY OPERATED LEVERS MOUNTED ON STILE
FACE, LOCATED AT 12" FROM TOP AND BOTTOM
FASTENED TO LOCK STILE WITH
#8 X 3/4" FH SMS (2) SCREWS PER BOLT

OPTION #2:

3 POINT LOCK SYSTEM BY 'INTERLOCK' AT 39"
FROM BOTTOM
HANDLE ACTIVATES DEAD BOLT AND SHOOT BOLTS
ENGAGING AT HEAD AND SILL
KEY OPERATED ON EXTERIOR AND THUMB TURN ON
INTERIOR
FASTENED TO ACTIVE LEAF LOCK STILE WITH
(2) #8-32 X 2" OH MS

INACTIVE LEAF

CONCEALED FLUSH BOLTS BY 'SULLIVAN & ASSOC.'
MANUALLY OPERATED LEVERS MOUNTED ON
INSIDE FACE OF LEAF STILE LOCATED AT
12" FROM TOP AND BOTTOM
FASTENED TO LOCK STILE WITH
#8 X 3/4" FH SMS (2) PER BOLT

WATER INFILTRATION LIMITATIONS:

WHERE WATER INFILTRATION RESISTANCE IS REQUIRED
LIMIT EXTERIOR LOADS FOR ALL CASES AS FOLLOWS
STD. SILL = +70.0 PSF (X & XX DOORS)
HI-RISE SILL = +90.0 PSF (XX DOORS)
+120.0 PSF (X DOORS)

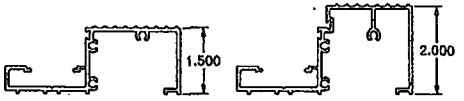

STD. SILL HI-RISE SILL

PRODUCT REVISED
as complying with the Florida
Building Code
Acceptance No 12-0308.40
Expiration Date 9/16/14
By
Miami Dade Product Control

PRODUCT RENEWED
as complying with the Florida
Building Code
Acceptance No 14-0722.13
Expiration Date 04/16/2019
By
Miami Dade Product Control

D.L. OPENINGS:
D.L.O. HEIGHT = LEAF HEIGHT – 8.1875" (STD. BOT. RAIL)
D.L.O. HEIGHT = LEAF HEIGHT – 11.9375" (HI RISE BOT. RAIL)
D.L.O. WIDTH = LEAF WIDTH – 8.625"

WIDTHS:

NOMINAL WIDTH	FRAME WIDTH	LEAF WIDTH	DAYLITE OPG.
2/6 (X)	31-1/2"	28-11/16"	20-1/16"
3/0 (X)	37-1/2"	34-11/16"	26-1/16"
3/4 (X)	39-5/8"	36-13/16"	28-3/16"
5/0 (XX)	59-3/4"	28-11/16"	20-1/16
6/0 (XX)	71-3/4"	34-11/16"	26-1/16"
6/4 (XX)	76"	36-13/16"	28-3/16"

NOTE:
DOOR WIDTH AND HEIGHT MUST
COMPLY WITH EGRESS REQUIREMENTS
PER FBC WHERE REQUIRED.

HEIGHTS:

NOMINAL HEIGHT	FRAME HEIGHT	LEAF HEIGHT	DAYLITE OPG. STANDARD BOTTOM RAIL	DAYLITE OPG. HI-PROFILE BOTTOM RAIL
6/8	79-3/4"	77-1/4"	69-1/16"	65-5/16"
8/0	95-3/4"	93-1/4"	85-1/16"	81-5/16"

NOTE:
GLASS CAPACITIES ON THIS SHEET ARE
BASED ON ASTM E1300-04 (3 SEC. GUSTS)
AND FLORIDA BUILDING COMMISSION
DECLARATORY STATEMENT DCA05-DEC-219

Engr: JAVAD AHMAD
CIVIL
FLA. PE # 70592
C.A.N. 3538

MAY 17 2012

AL-FAROOQ CORPORATION
ENGINEERS & PRODUCT DEVELOPMENT
12235 S.W. 87 AVE
MIAMI, FLORIDA 33174
TEL. (305) 254-5100 FAX. (305) 253-5978
COMP-ANL\W04-51ESW

SERIES-3000 ALUM OUTSWING FRENCH DOOR (L.M.L)

E.S. WINDOWS, LLC
5220 N.W. 72 AVE. BAY #4
MIAMI, FL 33166
TEL. (305) 624-7775 FAX. (305) 624-7777

revisions: no	date	by	description
D	08.14.09		UPDATED FOR 2007 FBC
E	11.23.09		GENERAL REV.
F	03.12.10		REV. PER BCCO COMMENTS
G	02.24.12		NO CHANGE THIS SHEET

date: 08-10-04
scale: 1/2"=1'-0"
dr. by: HAMID
chk. by:

drawing no. W04-51

sheet 2 of 7

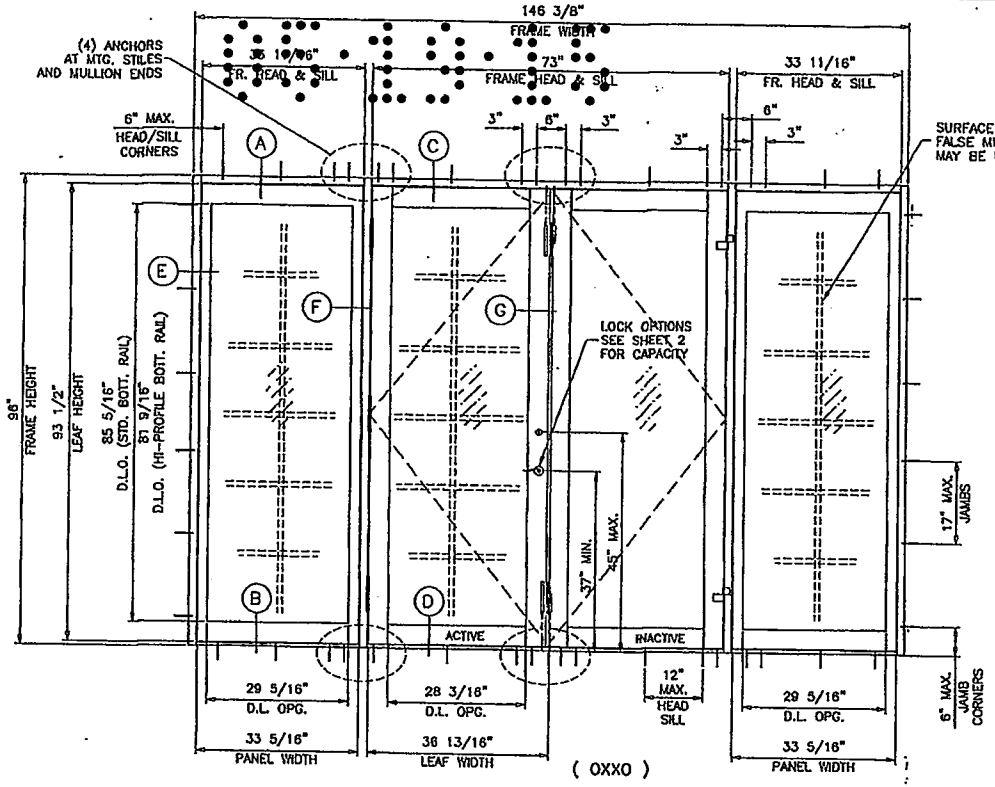

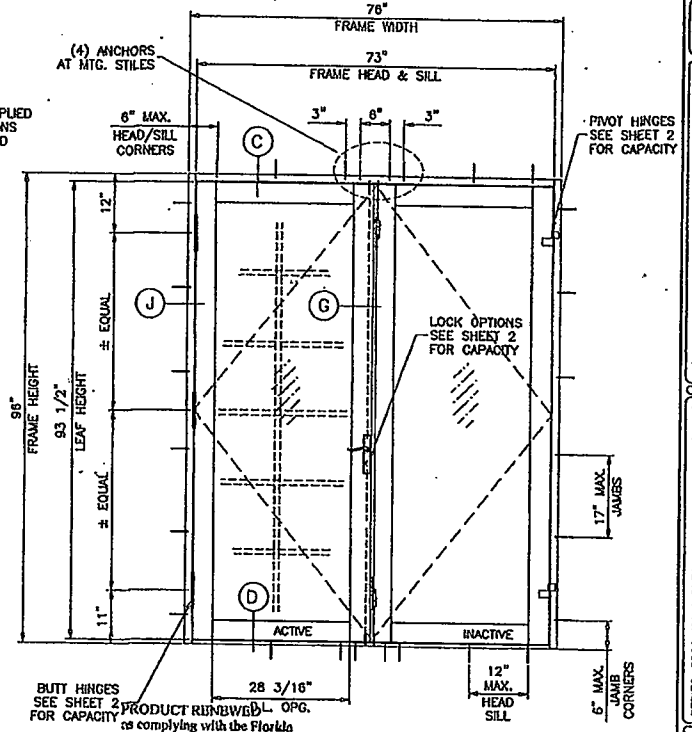

PRODUCT REVIEWED as complying with the Florida Building Code
Acceptance No 14-0722.73
Expiration Date 09/16/2019
By
Miami Dade Product Control

TYPICAL ELEVATIONS
TESTED UNITS

PRODUCT REVIEWED as complying with the Florida Building Code
Acceptance No 12-0308.40
Expiration Date SEPT 16, 2014
By Ishag I. Chanda
Miami Dade Product Control

NOTE:
FLUSH BOLTS ARE CONCEALED ON INACTIVE LEAF AND EXPOSED ON ACTIVE LEAF SEE DETAIL G ON SHEET 5.

SERIES-3000 ALUM OUTSWING FRENCH DOOR

APPROVAL APPLIES TO SINGLE (X) AND DOUBLE (XX) LEAF DOORS WITH OR WITHOUT SIDELITES.
SIDE LITES CAN BE ON ONE OR BOTH SIDES OF DOOR.

THIS PRODUCT HAS BEEN DESIGNED AND TESTED TO COMPLY WITH THE REQUIREMENTS OF THE FLORIDA BUILDING CODE INCLUDING HIGH VELOCITY HURRICANE ZONE (HVHZ).

WOOD BUCKS BY OTHERS, MUST BE ANCHORED PROPERLY TO TRANSFER LOADS TO THE STRUCTURE.

ANCHORS SHALL BE AS LISTED, SPACED AS SHOWN ON DETAILS, ANCHORS EMBEDMENT TO BASE MATERIAL SHALL BE BEYOND WALL DRESSING OR STUCCO.

ANCHORING OR LOADING CONDITIONS NOT SHOWN IN THESE DETAILS ARE NOT PART OF THIS APPROVAL.

A LOAD DURATION INCREASE IS USED IN DESIGN OF ANCHORS INTO WOOD ONLY.

MATERIALS INCLUDING BUT NOT LIMITED TO STEEL/METAL SCREWS, THAT COME INTO CONTACT WITH OTHER DISSIMILAR MATERIALS SHALL MEET THE REQUIREMENTS OF THE FLORIDA BLDG. CODE SECTION 2003.8.4.

INSTRUCTIONS:

USE CHARTS AS FOLLOWS.

STEP 1 DETERMINE DESIGN WIND LOAD REQUIREMENT BASED ON WIND VELOCITY, BLDG. HEIGHT, WIND ZONE USING APPLICABLE ASCE 7 STANDARD.

STEP 2 FOR SINGLE (X) AND DOUBLE (XX) DOOR CAPACITIES SEE SHEET 2.
USE LOWER VALUES FROM GLASS, HINGES, LOCK AND FRAME SILL OPTIONS USED.

STEP 3 FOR SIDELITE PANEL (O) CAPACITY SEE SHEET 2.1.

STEP 4 FOR SIDELITE COMBINATION WITH DOOR OR SIDELITE SEE MULLION CAPACITY CHART ON SHEET 2.2.

STEP 5 THE LOWEST VALUE RESULTING FROM STEPS 2, 3 AND 4 SHALL APPLY TO ENTIRE SYSTEM.

THESE PRODUCTS ARE RATED FOR LARGE & SMALL MISSILE IMPACT. SHUTTERS ARE NOT REQUIRED.

Engr: JAVAD AHMAD
CIVIL
FLA. PE # 70592
C.A.N. 3538
MAY 2012

AL-FAROOQ CORPORATION
ENGINEERS & PRODUCT DEVELOPMENT
1235 S.W. 87 AVE
MIAMI, FLORIDA 33174
TEL. (305) 264-8100 FAX. (305) 262-6978
COMP-ANL\W04-51ESW

SERIES-3000 ALUM OUTSWING FRENCH DOOR (L.M.I.)

E.S. WINDOWS, LLC
5220 N.W. 72 AVE. BAY #4
MIAMI, FL 33166
TEL. (305) 624-7775 FAX. (305) 624-7777

revisions:			
no	date	by	description
D	06.14.09		UPDATED FOR 2007 FBC
E	11.23.09		GENERAL REV.
F	03.12.10		REV. PER BCCO COMMENTS
G	02.24.12		UPDATED TO 2010 FBC

date: 06-10-04
scale: 1/2"=1'-0"
dr. by: HAMID
ck. by:

drawing no. W04-51

sheet 1 of 7

B15042

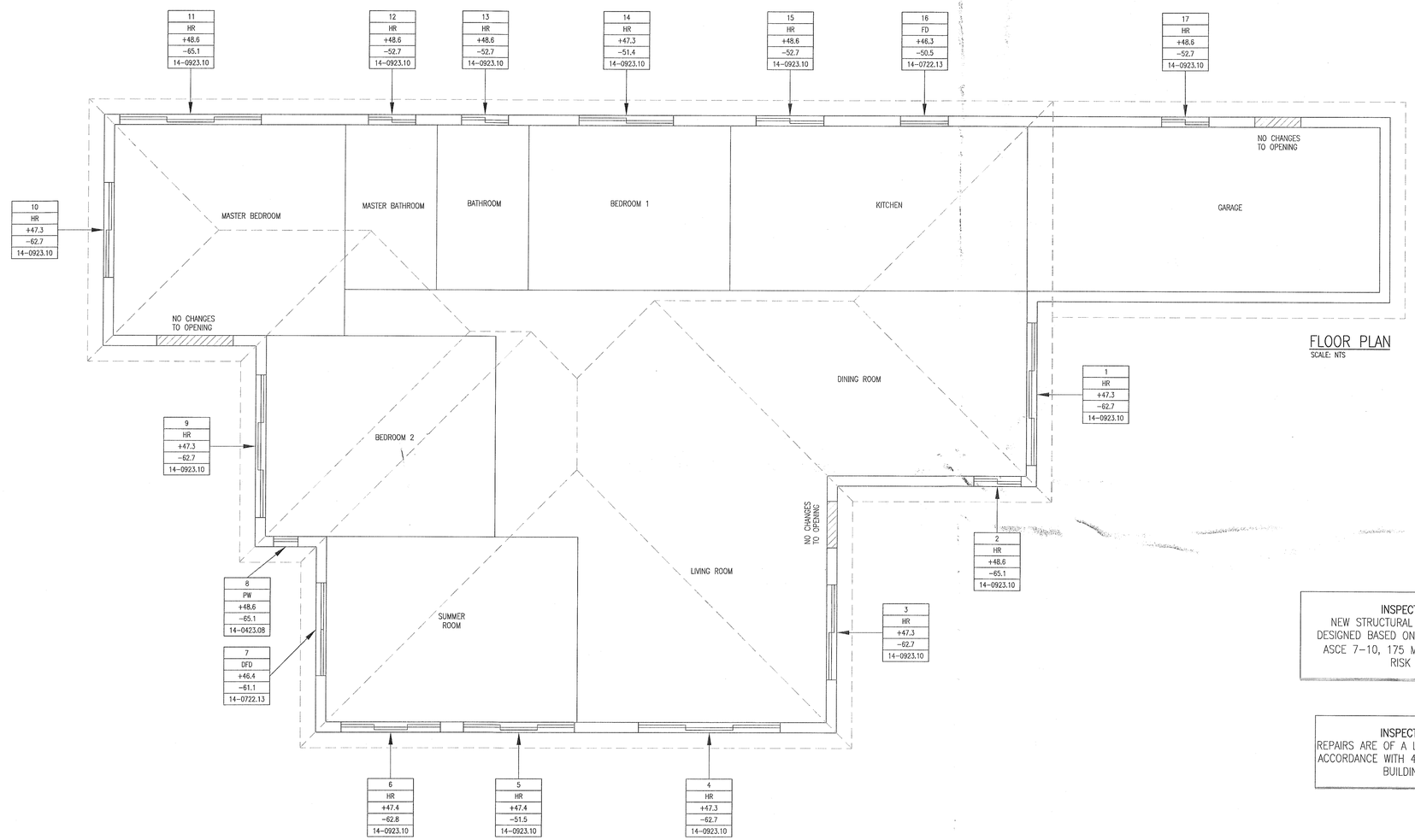

FLOOR PLAN
SCALE: NTS

N

INSPECTOR NOTE
NEW STRUCTURAL COMPONENTS WERE DESIGNED BASED ON THE FBC 2010, AND ASCE 7−10, 175 MPH (3 SEC), EXP. D. RISK CAT. 2.

INSPECTOR NOTE
REPAIRS ARE OF A LEVEL 1 ALTERATION IN ACCORDANCE WITH 403.1 OF THE EXISTING BUILDING CODE.

OFFICE COPY
CITY OF MIAMI BEACH
APPROVED FOR PERMIT BY
THE FOLLOWING:

BUILDING:
ZONING: 5/19/15
PLUMBING:
ELECTRICAL:
MECHANICAL:
FIRE PREVENTION:
FLOOD: 5/19/15
PUBLIC WORKS:
STRUCTURAL: 5/19/15
ELEVATOR:
ROOFING:

The use of these specifications and plans shall be restricted to the original client and site for which they were prepared. Any reproduction or distribution is expressly limited to such use. Any other reproduction, reuse, or disclosure to any method, in whole or in part, is prohibited. These drawings and specifications contain proprietary information and title remains with
Specialty Engineering Consultants, Inc.

SHEET INFORMATION
WIND LOAD CALCULATIONS AND ELEVATIONS

PROJECT INFORMATION
KATZEN RESIDENCE
110 W 3RD RIVO ALTO DR.
MIAMI BEACH, FL

CLIENT INFORMATION
ADVANCED PERMIT SERVICES
3093 NW 95TH AVE
CORAL SPRINGS, FL

NOTICE: In addition to the requirement of this permit, there may be additional restrictions applicable to this property that may be found in the Public Records of this County, and there may be additional permits required from other governmental entities such as water management districts, state agencies or federal agencies. Contractor to verify. The City of Miami Beach assumes no responsibility for any consequences results from these plans. Contractor to verify all Federal, State, and Local laws, rules and regulations.

SPECIALTY ENGINEERING CONSULTANTS, INC.
1593 SW 30TH AVE.
SUITE #200
BOYNTON BEACH, FL 33426
BADE − BROWARD − PALM BEACH
FL. CA. #009217
561 − 752 − 5440 OFFICE
561 − 752 − 5542 FAX

FILE NAME. struct_Katzen_AdvPermit
SCALE NTS
DATE 5/13/2015
RV'D. BY G.McD.
DRWN. BY A.M.
REVISION 0

Gary V. McDougle LICENSE No 56214 STATE OF FLORIDA PROFESSIONAL ENGINEER
MAY 1 8 2015

SEAL
GARY McDOUGLE, PE FL #56214
D. MARK LeBLANC, PE FL #35683

SHEET # S1 OF 3

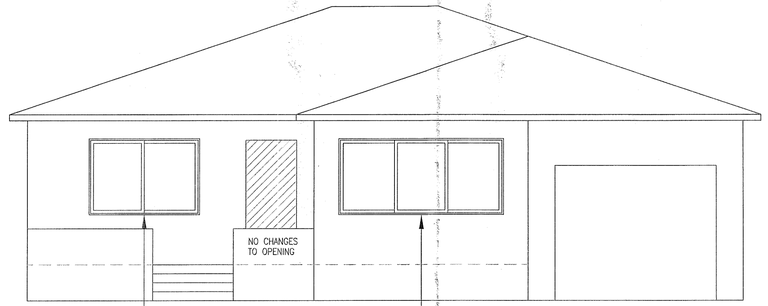

NORTH ELEVATION
SCALE: NTS

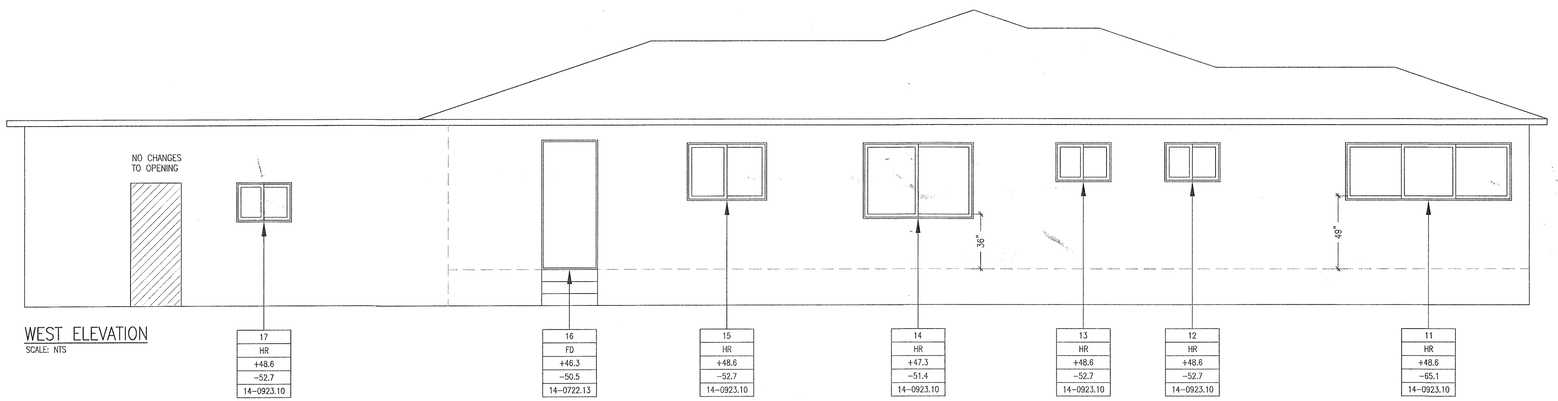

WEST ELEVATION
SCALE: NTS

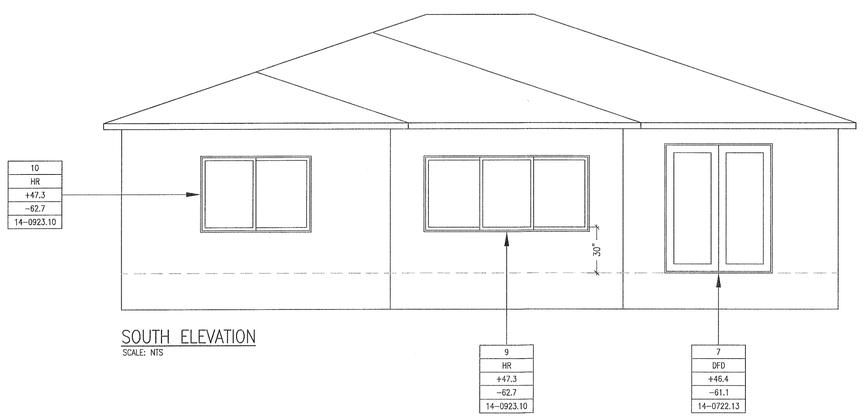

SOUTH ELEVATION
SCALE: NTS

The use of these specifications and plans shall be restricted to the original client and site for which they were prepared. Any reproduction or distribution is expressly limited to such use. Any other reproduction, reuse, or disclosure by any method, in whole or in part, is prohibited. These drawings and specifications contain proprietary information and title remains with
Specialty Engineering Consultants, Inc.

SHEET INFORMATION

WIND LOAD CALCULATIONS AND ELEVATIONS

PROJECT INFORMATION

KATZEN RESIDENCE
110 W 3RD RIVO ALTO DR.
MIAMI BEACH, FL

CLIENT INFORMATION

ADVANCED PERMIT SERVICES
3093 NW 95TH AVE
CORAL SPRINGS, FL

SPECIALTY ENGINEERING CONSULTANTS, Inc

1599 SW 30th AVE.
SUITE #20
BOYNTON BEACH, FL 33426

DADE – BROWARD – PALM BEACH
FL CA. #009217

561 – 752 – 5440 OFFICE
561 – 752 – 5542 FAX

FILE NAME. struct_Katzen_AdvPermit
SCALE NTS
DATE 5/13/2015
RV'D. BY G.McD.
DRWN. BY A.M.
REVISION 0

GARY L. McDOUGLE LICENSE No 56214 STATE OF FLORIDA PROFESSIONAL ENGINEER
MAY 18 2015

SEAL
GARY McDOUGLE, PE FL #56214
D. MARK LeBLANC, PE FL #35683

SHEET # S2 OF 3

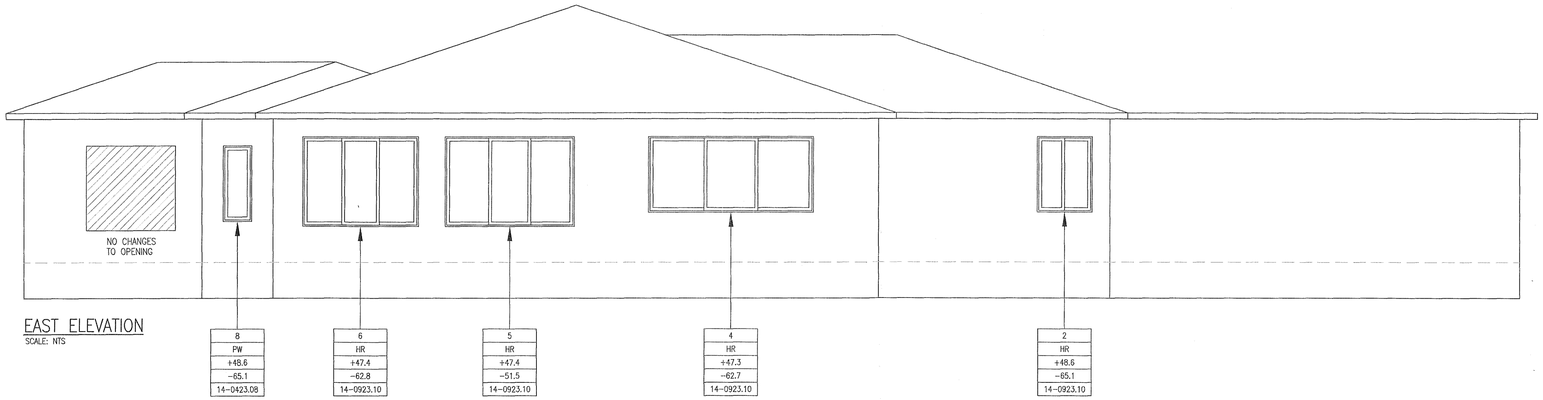

EAST ELEVATION
SCALE: NTS

MARK	Window/Door SGD, mull	WIDTH (in)	HEIGHT (in)	Window/door replaced? (y/n)	Product Approval #	Allowable pressure see NOA		Req'd Wind Pressure, see calc's		Shutter required? (y/n)	Product rated for impact? (y/n)	Comments
						(+) psf	(-) psf	(+) psf	(-) psf			
1	HR	111.	50.625	y	14-0923.10	80	90	47.3	62.7	n	y	Dining Room
2	HR	37.	50.625	y	14-0923.10	70	90	48.6	65.1	n	y	Dining Room
3	HR	74.	50.625	y	14-0923.10	70	90	47.3	62.7	n	y	Living Room
4	HR	111.	50.625	y	14-0923.10	80	90	47.3	62.7	n	y	Living Room
5	HR	87.	60.	y	14-0923.10	70	83.9	47.4	51.5	n	y	Summer Room
6	HR	78.	60.	y	14-0923.10	70	90	47.4	62.8	n	y	Summer Room
7	DFD	72.	86.	y	14-0722.13	90	90	46.4	61.1	n	y	Summer Room
8	PW	19.125	50.625	y	14-0423.08	70	80	48.6	65.1	n	y	Bedroom 2
9	HR	111.	50.625	y	14-0923.10	80	90	47.3	62.7	n	y	Bedroom 2
10	HR	74.	50.625	y	14-0923.10	70	90	47.3	62.7	n	y	Master Bedroom
11	HR	111.	38.375	y	14-0923.10	80	90	48.6	65.1	n	y	Master Bedroom
12	HR	37.	26.	y	14-0923.10	70	90	48.6	52.7	n	y	Master Bathroom
13	HR	37.	26.	y	14-0923.10	70	90	48.6	52.7	n	y	Bathroom
14	HR	74.	50.625	y	14-0923.10	70	90	47.3	51.4	n	y	Bedroom 1
15	HR	53.125	38.375	y	14-0923.10	70	90	48.6	52.7	n	y	Kitchen
16	FD	37.5	86.	y	14-0722.13	90	90	46.3	50.5	n	y	Kitchen
17	HR	37.	26.	y	14-0923.10	70	90	48.6	52.7	n	y	Garage

NOTES

1. Replace existing doors or windows as designated with new doors w/ current Miami-Dade product approval or State of Florida product approval
2. No change in rough opening size(s) were made. The existing opening is not to be modified.
3. All door frames to be attached through existing wood bucks with a 3/16" diameter "Tapcon" screws minimum embedment into the
4. Shutters or impact resistance is required in accordance with the "Existing Building Florida Building Code" section 507.3, "area replaced is greater than 25% of total aggregate area".
5. Wind design pressures are calculated in accordance with ASCE 7-10, Method 2, see attached calculations.
6. We have attempted to accurately depict the field conditions based on information submitted by others. This information may be lacking but we respectfully submit that this does not impact

For theta < 10 degrees the GCp values have been reduced by 10%

Loads specified are for Allowable Stress - 0.6*W(ult) 2.4.1 #7 (0.6D+0.6W)

Opening Mark	width (in)	height (in)	Effective Area of component (ft^2)	Area Used	GCp (positive, 4&5)	GCp (negative, 4)	GCp (negative, 5)	Zone 4 Unbreached P positive	Zone 4 Unbreached P negative	Zone 5 Unbreached P positive	Zone 5 Unbreached P negative
1	37.0	50.6	13.0	13.0	0.97	-1.07	-1.34			47.3	-62.7
2	18.5	50.6	6.5	10.0	1.00	-1.10	-1.40			48.6	-65.1
3	37.0	50.6	13.0	13.0	0.97	-1.07	-1.34			47.3	-62.7
4	37.0	50.6	13.0	13.0	0.97	-1.07	-1.34			47.3	-62.7
5	29.0	60.0	12.1	12.1	0.97	-1.07	-1.35	47.4	-51.5		
6	29.0	60.0	12.1	12.1	0.97	-1.07	-1.35			47.4	-62.8
7	36.0	86.0	21.5	21.5	0.95	-1.05	-1.30			46.4	-61.1
8	19.1	50.6	6.7	10.0	1.00	-1.10	-1.40			48.6	-65.1
9	37.0	50.6	13.0	13.0	0.97	-1.07	-1.34			47.3	-62.7
10	37.0	50.6	13.0	13.0	0.97	-1.07	-1.34			47.3	-62.7
11	37.0	38.4	9.9	10.0	1.00	-1.10	-1.40			48.6	-65.1
12	18.5	26.0	3.3	10.0	1.00	-1.10	-1.40	48.6	-52.7		
13	18.5	26.0	3.3	10.0	1.00	-1.10	-1.40	48.6	-52.7		
14	37.0	50.6	13.0	13.0	0.97	-1.07	-1.34	47.3	-51.4		
15	26.5	38.4	7.1	10.0	1.00	-1.10	-1.40	48.6	-52.7		
16	37.5	86.0	22.4	22.4	0.94	-1.05	-1.30	46.3	-50.5		
17	18.5	26.0	3.3	10.0	1.00	-1.10	-1.40	48.6	-52.7		

V(mph)	175	1620 FBC for HVHZ, or Fig. 26.5-1a
	1.0	
Risk Category	II	Table 1.5-1, page 2
Exposure	D	Section 26.7
Length of Building (ft)	85	
Width of Building (ft)	42	
Mean Roof height (ft)	15	
Kz	1.03	Table 30.3-1
Kd	**0.85**	Table 26.6-1, page 250
Kzt	**1**	Figure 26.8-1, page 252
pitch of roof	**4/12**	18.4 degrees
theta	18.4 degrees	
	1.0	Reduction factor for slope of roof
qh (psf)	68.65	Velocity Wind Pressure @ mean roof height
GCpi	0.18	-0.18 0.55 -0.55 See Table 6-7 pg 62
a1	4.20	10% of width 1
a2	8.50	10% of width 2
a3	6	0.4*mean roof height
a	**4.20**	**End Zone distance**

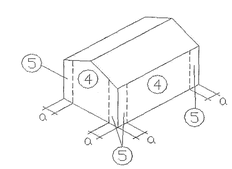

$$P := q_h \cdot (GCp - GCp_i)$$

The use of these specifications and plans shall be restricted to the original client and site for which they were prepared. Any reproduction or distribution is expressly limited to such use. Any further reproduction, reuse, or disclosure by any method, in whole or in part, is prohibited. These drawings and specifications contain proprietary information and title remains with Specialty Engineering Consultants, Inc.

SHEET INFORMATION
WIND LOAD CALCULATIONS AND ELEVATIONS

PROJECT INFORMATION
KATZEN RESIDENCE
110 W 3RD RIVO ALTO DR.
MIAMI BEACH, FL

CLIENT INFORMATION
ADVANCED PERMIT SERVICES
3093 NW 95TH AVE
CORAL SPINGS, FL

SPECIALTY ENGINEERING CONSULTANTS, Inc
1599 SW 30th AVE.
SUITE #20
BOYNTON BEACH, FL 33426
DADE - BROWARD - PALM BEACH
FL CA. #009217
561 - 752 - 5440 OFFICE
561 - 752 - 5542 FAX

FILE NAME. struct_Katzen_AdvPermit
SCALE NTS
DATE 5/13/2015
RV'D. BY G.McD.
DRWN. BY A.M.
REVISION 0

Gary L. McDougle LICENSE No 56214 STATE OF FLORIDA PROFESSIONAL ENGINEER
MAY 18 2015
SEAL
GARY McDOUGLE, PE FL #56214
D. MARK LeBLANC, PE FL #35683

SHEET # S3 OF 3

B1504272

CITY OF MIAMI BEACH **BREV141572 PRJ1400653**
APP
Building Department
1700 Convention Ctr Drive, 2nd Floor
Miami Beach, Florida 33139
Inspections: (305) 673-7370
Office: (305) 673-7610

Building Revisions

05-07-2014

Status: FINAL

Issued By: BUILLIRP

Site Address: 250 E RIVO ALTO DR MBCH
Parcel #: 32330010930

Applied: 05/07/2014
Approved: 05/07/2014

Valuation: $0.00

Applicant: R N PALMER ROOFING CO
14107 S W 142ND AVENUE
MIAMI BEACH FL 33186
305-696-6767

Property Owner: SOBE GORGEOUS INC
1800 SUNSET HARBOUR DR UNIT 2403
MIAMI FL 33139

Description: **B1403002-->Adding insulation**
Inspector Area:
Class Code:

PAID
MAY 07 2014
CITY OF MIAMI BEACH
BUILDING DEPARTMENT

DETAIL LIST

Hourly Charges		
Building Hours:	0.25	$28.50
Structural Hours:	0	$0.00
Electrical Hours:	0	$0.00
Mechanical Hours:	0	$0.00
Plumbing Hours:	0	$0.00
Governmental Compliance Hours:	0	$0.00
Planning & Zoning Hours:	0	$0.00
Public Works Hours:	0	$0.00
Elevator/Escalator Hours:	0	$0.00

Revised Plan Processing Fee $51.85

Total of All Fees: $80.35

Total of Payments:	$80.35
Balance Due:	$0.00

MIAMIBEACH

#51.85

Building Department
1700 Convention Center Drive, 2nd Floor
Miami Beach, Florida 33139
Office: 305.673.7610 Fax: 305.673.7857
http://www.miamibeachfl.gov/building/

Office Use Only
Submittal Date:
Permit Number: BREV141572

PRJ1400653

Permit Application

Applicant Information (Blue or Black Ink Only)

Property Address	Unit Number	Parcel/Folio Number
250 E Rivo Alto Dr		3233-001-0930

If sub-permit or revision, please indicate the Master Permit Number	Elevator I.D. number	If associated with violation, indicate BV#	Please note that outstanding expired permits must be resolved prior to the issuance of a work permit
B1403002.			

Permit Type (select one)		Permit Request (select all that apply)		Property Information (select one)
☐ Building	☐ Demolition - Year built_____	☐ New Permit	☐ Permit Extension	☐ Commercial
☐ Electrical	☐ Generator	☐ Change of Contractor	☐ Permit Renewal	☐ Multi-Family Residential
☐ Mechanical	☐ Special Event	☐ Change of Architect/Engineer	☐ Permit Revision	☐ Residential: Single-Family Residential or Duplex
☐ Plumbing	☐ Fire	☐ LEED	☐ Change of Use	**Total Value of Work**
☒ Roofing	☐ Elevator		☐ Private Provider	$
☐ Phased Permit			☐ City Project	

	New Construction/Addition	Alteration/Reconfiguration of Space
Square Footage 2845	SF	SF
Value of Work	$	$
☐ **A-1 Assembly (Theater/ Concert Hall)** ☐ **A-2 Assembly (Restaurant/Night Club/ Bar)** ☐ **A-3 Assembly (Worship/Amusement/ Arcade Community Hall** ☐ **B – Business** ☐ **D/E -Daycare & Educational** ☐ **I-1 Institutional (Ambulatory)** ☐ **I-2 Institutional (Non Ambulatory)**	☐ **M -Department Store / Drug Store** ☐ **M -Gas Station** ☐ **M – Retail/ Warehouse** ☐ **R-1 Residential Transient (Boarding House/ Hotel/Motel)** ☐ **R-2 Residential Permanent (Apartment/Dormitory/ Timeshare**	☐ **R-3 Residential (Dwelling/ Custom Homes)** ☐ **R-4 Residential (Assisted Living 6-16 person)** ☐ **S-1 Storage (Mod. Hazard (Repair Garage)** ☐ **S-2 Storage (Low Hazard (excluding Parking Garage)** ☐ **S-2 Storage (Parking Garage)**

Description of Work

Provide a summary of work to be done.

Adding Insulation.

Responsible Parties

Property Owner	Contractor
Name: Anne Michel (Sobe Gorgeous inc.)	Name: R.N. Palmer Roofing
Address: 250 E. Rivo Alto dr. Suite:	Address: 14147 SW 142 ave Suite:
City: Miami Beach State: FL. Zip Code: 33139	City: Miami State: FL. Zip Code: 33186
Driver's License/ State Identification Number:	State Identification Number/License: CCC 057143
E-Mail Address:	E-Mail Address:
Daytime phone: Cell Phone:	Daytime phone: Cell Phone:

Architect	Structural Engineer
Name:	Name:
Address: Suite:	Address: Suite:
City: State: Zip Code:	City: State: Zip Code:
Professional License Number:	Professional License Number:
E-Mail Address:	E-Mail Address:
Daytime phone: Cell Phone:	Daytime phone: Cell Phone:

Notice & Certification

This application is hereby made to obtain a permit to do the work and installations as indicated. I certify that all work will be performed to meet the standards of all laws and construction regulations in this jurisdiction. I understand that a **separate permit** must be secured for **Electrical, Elevator, Fire, Mechanical, Plumbing, Signs, Wells, Pools, Furnaces, Boilers, Heaters, Tanks, Air Conditioners**, etc.

Owner's Affidavit: I certify that all the forgoing information is correct. Owner Certifies that the aforementioned Contractor has the authorization to perform the work as specified above.

Lessee's Affidavit: Lessee certifies that he has full consent and authorization from owner of subject property to perform the abovementioned work and to hire above captioned contractor.

In addition to the requirements of this permit, there may be additional restrictions applicable to this property that may be found in the public records of this county, and there may be additional permits required from other governmental entities such as the Environmental Division of Miami-Dade County; Permitting, Environment and Regulatory Affairs; Water & Sewer Department; Department of Environmental Protection; South Florida Water Management District; Miami-Dade County Impact Fee water management districts; state agencies; and/or federal agencies.

Under penalties of perjury, I declare that to the best of my knowledge, the facts stated in this document are true. Any information found to be false may cause the revocation and/or denial of the permit and/or Certificate of Occupancy.

OWNER'S ELECTRONIC SUBMISSION STATEMENT: Under penalty of perjury, I declare that all the information contained in this building permit application is true and correct.

☑ **Owner/Lessee for new permits** (Documentation establishing ownership may be requested)
☐ **Master Permit Contractor of Record** (For sub-permit change of contractor)

WARNING TO OWNER: YOUR FAILURE TO RECORD A NOTICE OF COMMENCEMENT MAY RESULT IN YOUR PAYING TWICE FOR IMPROVEMENTS TO YOUR PROPERTY. A NOTICE OF COMMENCEMENT IS REQUIRED FOR ANY WORK WITH COST EXCEEDING $2500.00.

Anne Michel
Print Name

Signature ANNE MICHEL

STATE OF FLORIDA , COUNTY OF MIAMI-DADE

Sworn to and subscribed before me this 5th day of May 20 14, by Jon R. Palmer
☒ Personally
☐ Produced Identification – Type of Identification _____

Signature of Notary Public (SEAL)

JON R. PALMER
MY COMMISSION #EE127404
EXPIRES: SEP 05, 2015
Bonded through 1st State Insurance

☑ **Contractor** (Proof of licensure may be required if not on file)

Robert Palmer
Print Qualifier's Name

Qualifier's Signature

STATE OF FLORIDA , COUNTY OF MIAMI-DADE

Sworn to and subscribed before me this 5th day of May 20 14, by Jon R. Palmer
☒ Personally
☐ Produced Identification – Type of Identification _____

Signature of Notary Public (SEAL)

JON R. PALMER
MY COMMISSION #EE127404
EXPIRES: SEP 05, 2015
Bonded through 1st State Insurance

PERMIT #

B0506764

14

Florida Building Code Edition 2002
High Velocity Hurricane Zone Uniform Permit Application Form

Section A (General Information)

Master Permit No. VARIANCE Process No. 6010676 #

Contractor's Name

Job Address

ROOF CATEGORY

☐ Low Slope ☐ Mechanically Fastened Tile ☐ Mortar/Adhesive Set Tile

☐ Metal Panel/Shingles ☐ Wood Shingles/Shakes

Are there Gas-Vent Stacks? Yes ☐ No ☐

ROOF TYPE

☐ New Roof ☐ Re-Roofing ☐ Recovering ☐ Repair ☐ Maintenance

ROOF SYSTEM INFORMATION CONSTITUTES APPROVAL FOR OBTAINING BUILDING PERMITS ONLY

Low Slope Roof Area (SF) Steep Sloped Roof Area (SF) Total (SF)

PLEASE LEAVE THIS SPACE BLANK FOR OFFICIAL STAMPS.

City of Miami Beach
Building Department
Roofing Permit
OFFICE COPY

Review Type	Initials	Date	Bond
Building			
Zoning			
Engineering			
Public Works			

SEP 19 1995

Section B (Roof Plan)

Sketch Roof Plan: Illustrate all levels and sections, roof drains, scuppers, overflow scuppers and overflow drains. Include dimensions of sections and levels; clearly identify dimensions of elevated pressure zones and location of parapets.

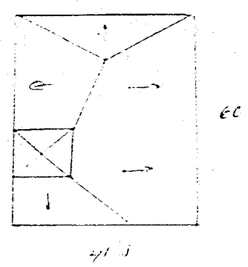

SECTION 1524
HIGH VELOCITY HURRICANE ZONES REQUIRED ONWER'S NOTIFICATION FOR ROOFING CONSIDERATIONS

1524.1 As it pertains to this section, it is the responsibility of the roofing contractor to provide the owner with the required roofing permit and to explain to the owner the content of this section. The provisions of Chapter 15 of the *Florida Building Code, Building* govern the minimum requirements and standards of the industry for roofing system installations. Additionally, the following items should be addressed as part of the agreement between the owner and the contractor. The owner's initial in the adjacent box indicates that the item has been explained

JC **1. Aesthetics-Workmanship:** The workmanship provisions of Chapter 15 (High Velocity Hurricane Zone) are for the purpose of providing that the roofing systems meets the wind resistance and water intrusion performance standards. Aesthetics (appearance) issues are not a consideration with respect to workmanship provisions. Aesthetic issues such as color or architectural appearance, that are not part of a zoning code, should be addressed as part of the agreement between the owner and the contractor.

JC **2. Resealing Wood Decks:** When replacing roofing, the existing wood roof deck may have to be resealed in accordance with the current provisions of Chapter 16 (High Velocity Hurricane Zone) of the Florida Building Code. (The roof deck is usually concealed prior to removing the existing roof system).

JC **3. Common Roofs:** Common roofs are those which have no visible delineation between neighboring units (i.e. townhouses, condominiums, etc.) In building with common roofs, the roofing contractor and/or owner should notify the occupants of adjacent units of roofing work to be performed.

JC **4. Exposed Ceilings:** Exposed, open beam ceilings are where the underside of the roof decking can be viewed from below. The owner may wish to maintain the architectural appearance, therefore, roofing nail penetrations of the underside of the decking may not be acceptable. The Florida Building Code provides the option of maintaining this appearance.

JC **5. Ponding Water:** The current roof system and/or deck of the building may not drain well and may cause water to pond (accumulate) in low-lying areas of the roof. Ponding can be an indication of structural distress and may require the review of a professional structural engineer. Ponding may shorten the life expectancy and performance of the new roofing system. Ponding conditions may not be evident until the original roofing system is removed. Ponding conditions should be corrected.

JC **6. Overflow Scuppers (wall outlets):** It is required that rainwater flow off so that the roof is not overloaded from a build up of water. Perimeter/edge walls or other roof extensions may block this discharge if overflow scuppers (wall outlets) are not provided. It may be necessary to install overflow scuppers in accordance with the *Florida Building code, Plumbing*.

JC **7. Ventilation:** Most roof structures should have some ability to vent natural airflow through the interior of the structural assembly (the building itself). The existing amount of attic ventilation shall not be reduced. It may be beneficial to consider additional venting which can result in extending the service life of the roof.

Owner's Agent's Signature Date Contractor's Signature

14

Florida Building Code Edition 2002
High Velocity Hurricane Zone Uniform Permit Application Form

Section C (Low Sloped Roof System)

Fill in Specific Roof Assembly Components and Identify Manufacturer
(If a component is not used, identify as "NA")

System Manufacturer: G.A.F. Materials
NOA No.: 03-0501.02
Design Wind Pressures, From RAS 128 or Calculations: Press1=-97.2, Press2=-82.6, Press3=-124.3
Max. Design Pressure, From the Specific NOA System: [illegible]
Deck Type: WOOD
Gauge/Thickness: 3" Face 26 ga
Slope: 1/4 : 12
Anchor/Base Sheet & No. of Ply(s): 1 Ply #75
Anchor/Base Sheet Fastener/Bonding Material: 1" Roof Screw-CR
Insulation Base Layer: Permalite
Base Insulation Size and Thickness: 3" Average
Base Insulation Fastener/Bonding Material: Hot Mopped
Top Insulation Layer: —
Top Insulation Size and Thickness: —
Top Insulation Fastener/Bonding Material: —
Base Sheet(s) & No. of Ply(s): —
Base Sheet Fastener/Bonding Material: —
Ply Sheet(s) & No. of Ply(s): 2 Plies IV
Ply Sheet Fastener/Bonding Material: Hot Mopped
Top Ply: 1 Ply
Top Ply Fastener/Bonding Material: Mineral Cap Sheet Hot Mopped
Surfacing: —

Fastener Spacing for Anchor/Base Sheet Attachment

Field: 9 " oc @ Lap. # Rows 2 @ 9 " oc
Perimeter: 6 " oc @ Lap. # Rows 4 @ 6 " oc
Corner: 6 " oc @ Lap. # Rows 4 @ 6 " oc

Number of Fasteners Per Insulation Board

Field ____ Perimeter ____ Corner ____

Illustrate Components Noted and Details as Applicable:
Woodblocking, Gutter, Edge Termination, Stripping, Flashing, Continuous Clear, Cant Strip, Base Flashing, Counter- Flashing, Coping, Etc.
Indicate: Mean Roof Height, Parapet Height, Height of Base Flashing, Component Material, Materials Thickness, Fastener Type, Fastener Spacing or Submit Manufacturers Details that Comply with RAS 111 and Chapter 16

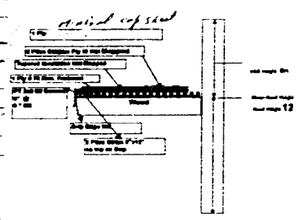

MIAMI-DADE COUNTY, FLORIDA
BUILDING CODE COMPLIANCE OFFICE (BCCO)
PRODUCT CONTROL SECTION

MIAMI-DADE COUNTY, FLORIDA
METRO-DADE FLAGLER BUILDING
140 WEST FLAGLER STREET, SUITE 1600
MIAMI, FLORIDA 33130-1569
(305) 375-2676 FAX (305) 375-2908

NOTICE OF ACCEPTANCE (NOA)

GAF Materials Corporation
1361 Alps Road
Wayne, New Jersey 07470

SCOPE: This NOA is being issued under the applicable rules and regulations governing the use of construction materials. The documentation submitted has been reviewed by the BCCO and accepted by the Building Code and Product Review Committee to be used in Miami-Dade County and other areas where allowed by the Authority Having Jurisdiction (AHJ).

This NOA shall not be valid after the expiration date stated below. The Miami-Dade County Product Control Division (In Miami-Dade County) and/or the AHJ (in areas other than Miami-Dade County) reserve the right to have this product or material tested for quality assurance purposes. If this product or material fails to perform in the accepted manner, the manufacturer will incur the expense of such testing and the AHJ may immediately revoke, modify, or suspend the use of such product or material within their jurisdiction. BORA reserves the right to revoke this acceptance, if it is determined by Miami-Dade County Product Control Division that this product or material fails to meet the requirements of the applicable building code.

This product is approved as described herein, and has been designed to comply with the High Velocity Hurricane Zone of the Florida Building Code.

DESCRIPTION: GAF Conventional Built-Up Roof System for Wood Deck.

LABELING: Each unit shall bear a permanent label with the manufacturer's name or logo, plus [illegible] following statement: "Miami-Dade County Product Control Approved", unless otherwise noted herein.

RENEWAL of this NOA shall be considered after a renewal application has been filed and there has been no [illegible] changes in the applicable building code negatively affecting the performance of this product.

TERMINATION of this NOA will occur after the expiration date or if there has been a revision to [illegible] materials, use, and/or manufacture of the product or process. Misuse of this NOA as an endorsement of any product, for sales, advertising or any other purpose shall automatically terminate this NOA. Failure to comply with any section of this NOA shall be cause for termination and removal of NOA.

ADVERTISEMENT: The NOA number preceded by the words Miami-Dade County, Florida, [illegible] the expiration date may be displayed in advertising literature. If any portion of the NOA is displayed, then it shall be done in its entirety.

INSPECTION: A copy of this entire NOA shall be provided to the user by the manufacturer or its [illegible] and shall be available for inspection at the job site at the request of the Building Official.

This NOA renews NOA #02-0408.09 and consists of pages 1 through 21.
The submitted documentation was reviewed by Frank Zalonga, RRC

NOA No: 03-0501.02
Expiration Date: 11/04/08
Approval Date: 10/23/03
Page 1 of 21

APPROVED ASSEMBLIES

Deck Type 11: Wood, Insulated

Deck Description: $^{19}/_{32}$" or greater plywood or wood plank

System Type A (1): Anchor sheet mechanically fastened, all layers of insulation adhered with approved asphalt.

All General and System Limitations shall apply.

One or more layers of any of the following insulations.

Insulation Layer (Table 2) (When applicable: Steel plate only =6, plastic plate only =7)	Insulation Fasteners (Table 3)	Fastener Density/ft²
ACPanel-I, ENERGY 3, GAFTEMP® Isoburn II, ENERGY 2 Plus, GAFTEMP Isoburn RA, GAFTEMP Isoburn HN, GAFTEMP Composite, GAFTEMP Composite A, GAFTEMP Composite N, ISOGA EnergyGuard, ISOGA EnergyGuard Composite, EverGuard ISO, ISOBlue, EnergyGuard RA, EnergyGuard RA Composite Minimum 1" thick	N/A	N/A
ISOGA High Density Wood Fiber, GAFTEMP® High Density Wood Fiber, GAFTEMP Recoverboard, Wood Fiber, GAFTEMP® Fiberboard Minimum ½" thick	N/A	N/A
Perlite, GAFTEMP® Permalite®, Permalite Tapered, Perco Minimum ½" thick	N/A	N/A
Fiberglas (Min. $^{15}/_{32}$" thick)	N/A	N/A

Note: All insulation shall be adhered to the anchor sheet in full mopping of approved hot asphalt within the EVT range and at a rate of 20-40 lbs/100 ft². Please refer to Roofing Application Standard RAS 117 for insulation attachment. Insulation listed as base layer only shall be used only as base layers with a second layer of approved top layer insulation installed as the final membrane substrate. Compatible insulation panels may be used as a top layer placed with the polyisocyanurate side facing down. GAF requires either a ply of GAFGLAS STRATAVENT® Eliminator Perforated laid dry or a layer of GAFTEMP® PERMALITE or wood fiber overlay board on all isocyanurate applications.

Anchor sheet: GAFGLAS #80 Ultima™ Base Sheet, STRATAVENT® Eliminator Perforated Nailable, RUBEROID Modified Base Sheet, RUBEROID® 20, RUBEROID SBS Heat-Weld™ Smooth or RUBEROID SBS Heat-Weld 25 base sheet mechanically fastened as described below:

Fastening Options: GAFGLAS® Ply #40, GAFGLAS Flex Ply™ 6, GAFGLAS #75 Base Sheet or any of above Anchor sheets attached to deck with approved annular ring shank nails and tin caps at a fastener spacing of 9" o.c. at the lap staggered and in two rows 12" o.c. in the field.
(Maximum Design Pressure =45 psf, See General Limitation #7)

NOA No: 03-0501.02
Expiration Date: 11/04/08
Approval Date: 10/23/03
Page 10 of 21

14

GAFGLAS® Ply 4®, GAFGLAS Flex Ply™ 6, GAFGLAS #75 Base Sheet or any of above Anchor sheets attached to deck with Drill-Tec (GAPTITE) #12 or #14 Screws and 3" Plates, 12" o.c. in 3 rows. One row is in the 2" side lap. The other rows are equally spaced approximately 12" o.c. in the field of the sheet.
(Maximum Design Pressure –45 psf, See General Limitation #7)
GAFGLAS Flex Ply™ 6/GAFGLAS #75 Base Sheet or any of above Anchor sheets attached to deck with approved minimum ring shank nails and tin caps at a fastener spacing of 9" o.c. in 4" lap staggered and in two rows 9" o.c. in the field. *(Maximum Design Pressure –52.5 psf, See General Limitation #7)*
GAFGLAS #75 Base Sheet or any of above Anchor sheets attached to deck with Drill-Tec (GAPTITE) #12 or #14 Screws and 3" Plates, 12" o.c. in 4 rows. One row is in the 2" side lap. The other rows are equally spaced approximately 9" o.c. in the field of the sheet.
(Maximum Design Pressure –60 psf, See General Limitation #7)
Any of above Anchor sheets attached to deck approved annular ring shank nails and 3" Inverted Drill-Tec (GAPTITE) insulation plates at a fastener spacing of 9" o.c. at the 4" lap staggered in two rows 9" in the field.
(Maximum Design Pressure –60 psf, See General Limitation #7)
GAFGLAS #75 Base Sheet or any of above Anchor sheets attached to deck with Drill-Tec (GAPTITE) #12 or #14 Screws and 3" Plates, 8" o.c. in 4 rows. One row is in the 2" side lap. The other rows are equally spaced approximately 9" o.c. in the field of the sheet.
(Maximum Design Pressure –75 psf, See General Limitation #7)

Base Sheet: (Optional) Install one ply of GAFGLAS® #75, GAFGLAS #80 Ultima™ Ultra Base Sheet, GAFGLAS STRATAVENT® Eliminator Perforated, RUBEROID Modified Base Sheet, RUBEROID Mop Smooth, RUBEROID® 20 RUBEROID SBS Heat-Weld Smooth or RUBEROID SBS Heat-Weld directly over the top layer of insulation. Adhere with any approved mopping asphalt applied within the EVT range and at a rate of 20-40 lbs./sq. (see General Limitation #4).

Ply Sheet: One or more plies GAFGLAS FLY 4®, GAFGLAS Flex Ply 6 sheet, #80 Ultima, RUBEROID Mop Smooth or RUBEROID 20 adhered in a full mopping of approved asphalt applied within the EVT range and at a rate of 20-40 lbs./sq.

Cap Sheet: (Optional) One ply of GAFGLAS® Mineral Surfaced Cap Sheet adhered in a full mopping of approved asphalt applied within the EVT range and at a rate of 20-40 lbs./sq.

Surfacing: (Required if no cap sheet is used) Install one of the following:

1. GAF Special Roofing Bitumen with an application rate of 20 lbs./sq with an application rate of 1.5 gal./sq.; or GAF WEATHER COAT® Emulsion (Matrix 305 Fibered Emulsion) with an application rate of 3 gal./sq.; or GAF Premium Fibered Aluminum Roof Coating (Matrix System Pro Aluminum Roof Coating Fibered 301) with an application rate of 1.5 gal./sq.
2. Asphalt flood coat at an application rate of 60 lbs./sq. a 20%, plus gravel or slag with an application rate of 400 lbs./sq. & 300 lbs./sq., respectively.
3. Top Coat Surface Seal SB (Matrix 602 SB Coating). Top Coat MB Plus (Matrix 715 MB Coating), GAF WeatherCote or WeatherCote LOW-VOC applied at rate of 1-1.5 gal/sq.

Maximum Design Pressure: See Pastening above.

WOOD DECK SYSTEM LIMITATIONS:

1. A slip sheet is required with Ply 4 and Flex Ply 6 when used as a mechanically fastened base or anchor sheet.
2. Minimum ⅝" Dens Deck or ½ Type X gypsum board is acceptable to be installed directly over the wood deck.

GENERAL LIMITATIONS:

1. Fire classification is not part of this acceptance, refer to a current Approved Roofing Materials Directory for fire ratings of this product.
2. Insulation may be installed in multiple layers. The first layer shall be attached in compliance with Product Control Approved guidelines. All other layers shall be adhered in a full mopping of approved asphalt applied within the EVT range and at a rate of 20-40 lbs./sq., or mechanically attached using the fastening patterns of the top layer.
3. All standard panel sizes are acceptable for mechanical attachment. When applied in approved asphalt, panel size shall be 4' x 4' maximum.
4. An overlay and/or recovery board insulation panel is required on all applications over closed cell foam insulations when the base sheet is fully mopped. If an recovery board is used the base sheet shall be applied using spot mopping with approved asphalt, 12" diameter circles, 24" o.c.; or strip mopped 8" ribbons in three rows, one at each sidelap and one down the center of the sheet allowing a continuous area of ventilation. Backcoiling of the strips is not acceptable. A 6" break shall be placed every 12' in each ribbon to allow cross ventilation. Asphalt application of either system shall be at a minimum rate of 12 lbs./sq. Note: Spot attached systems shall be limited to a maximum design pressure of –45 psf.
5. Fastener spacing for insulation attachment is based on a Minimum Characteristic Force (F') value of 275 lbf., as tested in compliance with Testing Application Standard TAS 105. If the fastener value, as field-tested, are below 275 lbf. insulation attachment shall not be acceptable.
6. Fastener spacing for mechanical attachment of anchor/base sheet or membrane attachment is based on a minimum fastener resistance value in conjunction with the maximum design value listed within a specific system. Should the fastener resistance be less than that required, as determined by the Building Official, a revised fastener spacing, prepared, signed and sealed by a Florida Registered Engineer, Architect, or Registered Roof Consultant may be submitted. Said revised fastener spacing shall utilize the withdrawal resistance value taken from Testing Application Standards TAS 105 and calculations in compliance with Roofing Application Standard RAS 117.
7. Perimeter and corner areas shall comply with the enhanced uplift pressure requirements of these areas. Fastener densities shall be increased for both insulation and base sheet as calculated in compliance with Roofing Application Standard RAS 117. (When this limitation is specifically referred within this NOA, General Limitation #9 will not be applicable.)
8. All attachment and sizing of perimeter nailers, metal profile, and/or flashing termination designs shall conform with Roofing Application Standard RAS 111 and applicable wind load requirements.
9. The maximum designed pressure limitation listed shall be applicable to all roof pressure zones (i.e. field, perimeters, and corners). Neither rational analysis, nor extrapolation shall be permitted for enhanced fastening at enhanced pressure zones (i.e. perimeters, extended corners and corners). (When this limitation is specifically referred within this NOA, General Limitation #7 will not be applicable.)
10. All products listed herein shall have a quality assurance audit in accordance with the Florida Building Code and Rule 9B-72 of the Florida Administrative Code.

END OF THIS ACCEPTANCE

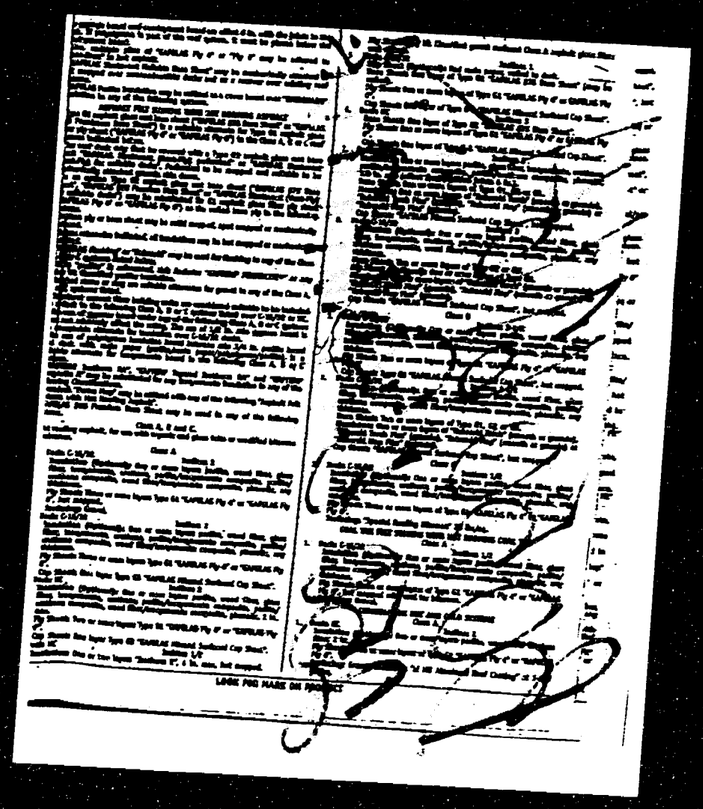

14

B0506764
250 E.RIVERSIDE

B13025 19

SKETCH OF BOUNDARY SURVEY

DESCRIPTION:

Lot 4, Block 8, RIVO ALTO AMENDED, according to the plat thereof, as recorded in Plat Book 7, Page 74 of the Public Records of Miami-Dade County, Florida.

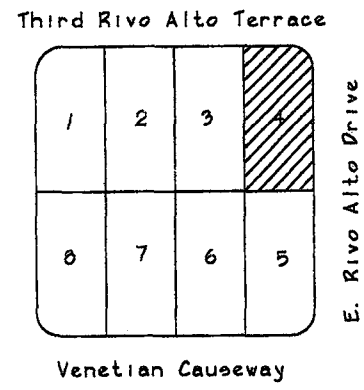

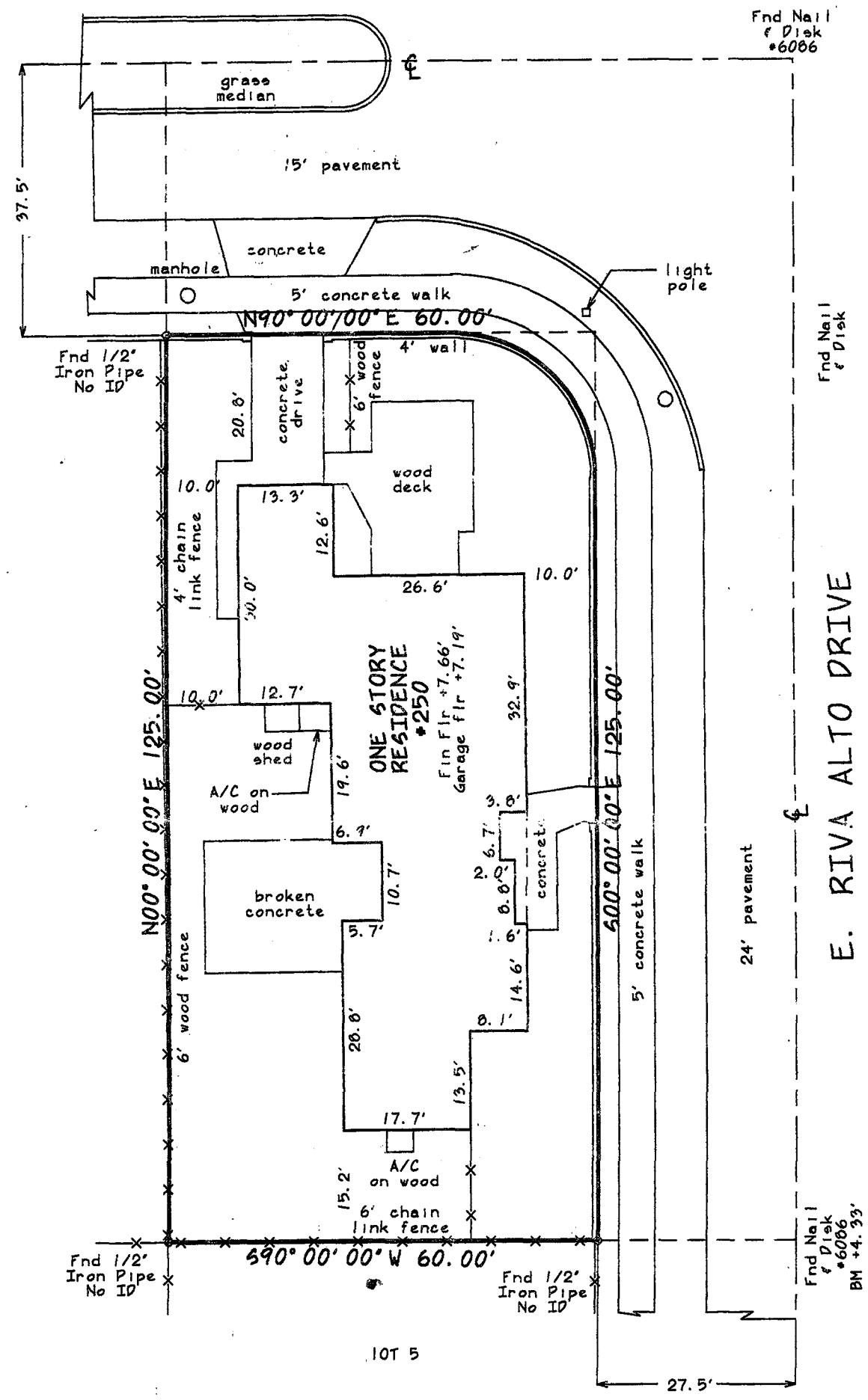

LEGEND
A/C =AIR CONDITIONER
BCR =BROWARD COUNTY RECORDS
BM =BENCHMARK
BFP =BACK FLOW PREVENTOR
CO =CLEAN OUT
LP =LIGHT POLE
COV =COVERED
CONC =CONCRETE
DCR =DADE COUNTY RECORDS
FH =FIRE HYDRANT
FND =FOUND
FPL =FLORIDA POWER & LIGHT
GV =GATE VALVE
H =HANDICAP PARKING SPACE
MH =MANHOLE
MW =MONITORING WELL
ORB =OFFICIAL RECORDS BOOK
OHW =OVERHEAD WIRES
O/S =OFFSET
PB =PLAT BOOK
PBCR =PALM BEACH COUNTY RECORDS
PG =PAGE
POB =POINT OF BEGINNING
POC =POINT OF COMMENCEMENT
R =RECORD
R&M =RECORD & MEASURED
R/W =RIGHT-OF-WAY
S.F. =SQUARE FEET
UE =UTILITY EASEMENT
WM =WATER METER

FILENAME: RA4-8

THIS SURVEY MEETS THE MINIMUM TECHNICAL STANDARDS AS SET FORTH BY THE FLORIDA BOARD OF PROFESSIONAL SURVEYORS AND MAPPERS IN CHAPTER 61G17-6, FLORIDA ADMINISTRATIVE CODE, PURSUANT TO SECTION 472.027, FLORIDA STATUTES.

Mikki H. Ulrich 1/17/13

MIKKI H. ULRICH
PROFESSIONAL SURVEYOR MAPPER #5653
STATE OF FLORIDA

ORDER NO.	FOR:	DATE
1301011	Van Kirk	1/16/13
REVISIONS		

NOTES:

Certification of Authorization LB #7707
Subsurface features not shown.

Certification to date of field work & not signature date.
Bearings shown are based on the Centerline E. Rivo Alto Drive; N 00° 00' 00" E (assumed meridian)

Elevations per N.G.V.D. 1929.

FLOOD ZONE: AE
BASE FLOOD ELEVATION: +10'

THIS SURVEY REFLECTS ALL EASEMENTS & RIGHTS OF WAY AS PER RECORDED PLAT &/OR TITLE COMMITMENT IF SUPPLIED, UNLESS OTHERWISE STATED. NO OTHER TITLE VERIFICATION HAS BEEN PERFORMED BY THE UNDERSIGNED. TITLE COMMITMENT #:

SCALE: 1" = 20'

FIELD BOOK: FILE

Not valid without the signature and the original raised seal of a Florida licensed surveyor and mapper.

DENI/CARNAHAN, INC.
P.O. BOX 938858, MARGATE, FLORIDA 33093 (954)971-0540 FAX (954)971-5980
LAND SURVEYS ○ SUBDIVISIONS ○ CONSTRUCTION SURVEYS

B1403002

MIAMI-DADE COUNTY

"Delivering Excellence Every Day"

SECTION 1524

HIGH VELOCITY HURRICANE ZONES– REQUIRED OWNERS NOTIFICATION FOR ROOFING CONSIDERATIONS

1524.1 Scope. As it pertains to this section, it is the responsibility of the roofing contractor to provide the owner with the required roofing permit, and to explain to the owner the content of this section. The provisions of Chapter 15 of the ***Florida Building Code, Building*** govern the minimum requirements and standards of the industry for roofing system installations. Additionally, the following items should be addressed as part of the agreement between the owner and the contractor. The owner's initial in the designated space indicates that the item has been explained.

AM **1. Aesthetics-workmanship:** The workmanship provisions of Chapter 15 (High Velocity Hurricane Zone) are for the purpose of providing that the roofing system meets the wind resistance and water intrusion performance standards. Aesthetics (appearance) are not a consideration with respect to workmanship provisions. Aesthetic issues such as color or architectural appearance, that are not part of a zoning code, should be addressed as part of the agreement between the owner and the contractor.

AM **2. Renailing wood decks:** When replacing roofing, the existing wood roof deck may have to be renailed in accordance with the current provisions of Chapter 16 (High Velocity Hurricane Zones) of the Florida Building Code. (The roof deck is usually concealed prior to removing the existing roof system).

AM **3. Common roofs:** Common roofs are those which have no visible delineation between neighboring units (i.e. townhouses, condominiums, etc.). In buildings with common roofs, the roofing contractor and/or owner should notify the occupants of adjacent units of roofing work to be performed.

AM **4. Exposed ceilings:** Exposed, open beam ceilings are where the underside of the roof decking can be viewed from below. The owner may wish to maintain the architectural appearance; therefore, roofing nail penetrations of the underside of the decking may not be acceptable. The owner provides the option of maintaining this appearance.

AM **5. Ponding water:** The current roof system and/or deck of the building may not drain well and may cause water to pond (accumulate) in low-lying areas of the roof. Ponding can be an indication of structural distress and may require the review of a professional structural engineer. Ponding may shorten the life expectancy and performance of the new roofing system. Ponding conditions may not be evident until the original roofing system is removed. Ponding conditions should be corrected.

AM **6. Overflow scuppers (wall outlets):** It is required that rainwater flow off so that the roof is not overloaded from a build up of water. Perimeter/edge walls or other roof extensions may block this discharge if overflow scuppers (wall outlets) are not provided. It may be necessary to install overflow scuppers in accordance with the requirements of: Chapter 15 and 16 herein and the ***Florida Building Code, Plumbing***.

AM **7. Ventilation:** Most roof structures should have some ability to vent natural airflow through the interior of the structural assembly (the building itself). The existing amount of attic ventilation shall not be reduced. **Exception:** Attic spaces, designed by a Florida-licensed engineer or registered architect to eliminate the attic venting, venting shall not be required.

Owner's/Agent's Signature: Date:

Contractor's Signature: Permit Number:

Property Address: 250 E. Rio Alto DR

Review Type	Initials	Date
Roofing	AM	3/27/14
Zoning		3/27/14

NOTE: In addition to the requirements of this permit, there may be additional restrictions applicable to this property that may be found in the Public records of Miami-Dade County and the City of Miami Beach, such as water and sewer connections, required permits from other governmental entities, such as water management districts, state agencies, or federal agencies. Contractor assumes no responsibility for ensuring that these plans which are approved subject to compliance with the Florida Building Code and Laws, Rules, and Regulations of the State and Federal Governments.

Florida Building Code Section 104.5.3
REVIEWED FOR CODE COMPLIANCE

NOTICE
Waterproofing work under this project will require a separate Roofing Permit. Contractor must call for all required inspections.

NOTICE
Any lightweight insulation or lightweight structural concrete installation will require a separate permit. Contractor must call for all required inspections during the installation of lightweight fill.

For all reroofing jobs, a sheathing inspection is required if any deck. Contractor may provide an sheathing inspection.

For a roof recovering, a sheathing inspection is required. Contractor may provide an sheathing inspection for sheating must be provided with permit application.

City of Miami Beach
Building Department
Roofing Permit
OFFICE COPY

Florida Building Code Edition 2002
High Velocity Hurricane Zone Uniform Permit Application Form.

Section A (General Information)

Master Permit No. _____ **Process No.** _____

Contractor's Name RN Palmer

Job Address 250 E. Rivo Alto dr.

ROOF CATEGORY

- ☒ Low Slope
- ☐ Asphaltic Shingles
- ☐ Mechanically Fastened Tile
- ☐ Metal Panel/Shingles
- ☐ Mortar/Adhesive Set Tile
- ☐ Wood Shingles/Shakes
- ☐ Prescriptive BUR-RAS 150

Are there Gas Vent Stacks? Yes ☐ No ☒
Type: Natural ☐ LPGX ☐

ROOF TYPE

- ☐ New Roof
- ☒ Re-Roofing
- ☐ Recovering
- ☐ Repair
- ☐ Maintenance

ROOF SYSTEM INFORMATION

Low Slope Roof Area (SF)	Steep Sloped Roof Area (SF)	Total (SF)
284	N/A	284

Section B (Roof Plan)

Sketch Roof Plan: **Illustrate all levels and sections, roof drains, scuppers, overflow scuppers and overflow drains. Include dimensions of sections and levels, clearly identify dimensions of elevated pressure zones and location of parapets.**

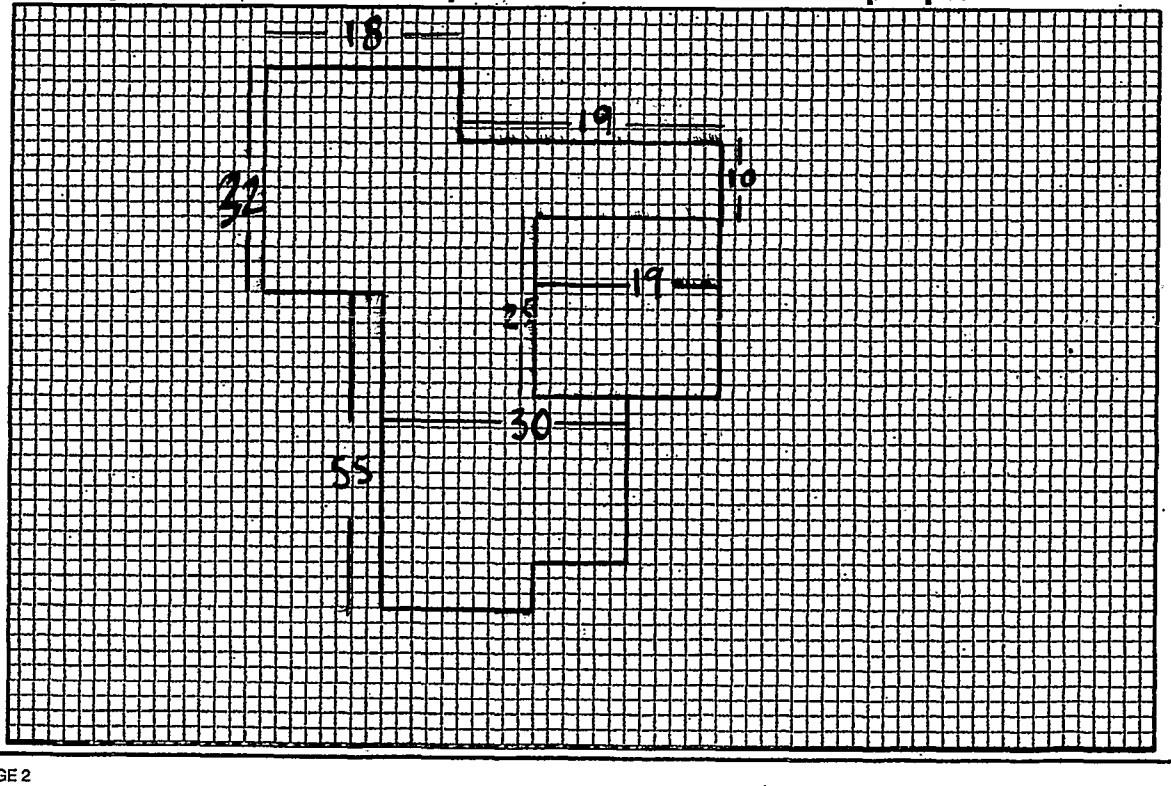

OWNER'S AFFIDAVIT OF EXEMPTION

ROOF TO WALL CONNECTION HURRICANE MITIGATION RETROFIT FOR EXISTING SITE-BUILT SINGLE FAMILY RESIDENTIAL STRUCTURES PURSUANT TO SECTION 553.844 F.S.

To: Miami-Dade County Building & Neighborhood Compliance Department
11805 Coral Way, Suite 111
Miami, FL 33175

Re: Owner's Name Sobe Gorgeous Inc. / Anna Michele

Property Address 250 E. Rivo Alto dr.

Roofing Permit Number _____

Dear Building Official:

I Anna Michele certify that I am not required to retrofit the roof to wall connections of my building because:

☑ The just valuation for the structure for purposes of ad valorem taxation in less than $300,000.00.

☐ The building was constructed in compliance with the provisions of the Florida Building Code (FBC) or with the provisions of the 1994 edition of the South Florida Building Code (1994 SFBC).

president SOBE GORGEOUS INC
Signature of Property Owner

Anna Michele / Sobe Gorgeous Inc.
Print Name

STATE OF FLORIDA COUNTY OF MIAMI-DADE
Sworn to and subscribed before me this 11th
day of March, 20 14,
(SEAL)

JON R. PALMER
MY COMMISSION #EE127404
EXPIRES: SEP 05, 2015
Bonded through 1st State Insurance

✓ Personally known
____ or Produced Identification

When the just valuation of the structure for purposes of ad valorem taxation is equal to or more than $300,000.00, and the building was not constructed in compliance with the FBC nor with 1994 SFBC, and affidavit of Roof to Wall Connection Hurricane Mitigation Retrofit must be provided.

Address | Owner Name | Folio

SEARCH:

250 E RIVO ALTO DR | Suite

PROPERTY INFORMATION

Folio: 02-3233-001-0930

Sub-Division:
RIVO ALTO AMD

Property Address
250 E RIVO ALTO DR
Miami Beach , FL 33139-1268

Owner
SOBE GORGEOUS INC

Mailing Address
1800 SUNSET HARBOUR DR UNIT 2403
MIAMI BEACH , FL 33139

Primary Zone
0100 SINGLE FAMILY - GENERAL

Primary Land Use
0101 RESIDENTIAL - SINGLE FAMILY : 1 UNIT

Beds / Baths / Half	2 / 2 / 0
Floors	1
Living Units	1
Actual Area	2,290 Sq.Ft
Living Area	1,823 Sq.Ft

Report Homestead Fraud (http://www.miamidade.gov/paportal/HomesteadFraud/HomesteadFraud.aspx)

Tax Comparison (http://www.miamidade.gov/PAPortal/Taxes/TaxComparison.aspx?folio=0232330010930)

Tax Estimator (http://www.miamidade.gov/PAPortal/Taxes/TaxEstimator.aspx)

TRIM Notice (http://www.miamidade.gov/paportal/trimpdf/MakeTrim.aspx?FolSrch=0232330010930)

View Taxes (https://www.miamidade.county-taxes.com/public/real_estate/parcels/0232330010930)

ASSESSMENT INFORMATION

Year	2013	2012	2011
Land Value	$637,800	$450,000	$450,000
Building Value	$180,476	$226,568	$227,909
Extra Feature Value	$1,732	$2,028	$2,028
Market Value	$820,008	$678,596	$679,937
Assessed Value	$820,008	$353,539	$343,242

TAXABLE VALUE INFORMATION

	2013	2012	2011
COUNTY			
Exemption Value	$0	$50,000	$50,000
Taxable Value	$820,008	$303,539	$293,242
SCHOOL BOARD			
Exemption Value	$0	$25,000	$25,000
Taxable Value	$820,008	$328,539	$318,242
CITY			
Exemption Value	$0	$50,000	$50,000
Taxable Value	$820,008	$303,539	$293,242
REGIONAL			
Exemption Value	$0	$50,000	$50,000
Taxable Value	$820,008	$303,539	$293,242

BENEFITS INFORMATION

Benefit	Type	2013	2012	
Save Our Homes Cap (http://www.miamidade.gov/pa/amendment_10.asp)	Assessment Reduction		$325,057	$336
Homestead (http://www.miamidade.gov/pa/exemptions_homestead.asp)	Exemption		$25,000	$25

MIAMI-DADE COUNTY

"Delivering Excellence Every Day"

Miami-Dade County HVHZ Electronic Roof Permit Form
Section C Page (Low Slope Roof Systems)

Fill in the specific roof assembly components. If a component is not required, insert not applicable (n/a) in the text box.

ROOF SYSTEM MANUFACTURER: GAF

Product Approval (NOA): 13-0424.09 System Type: E

Wind Uplift Pressures, From RAS 128 or Sealed Calculations:

(P1) Field: ~~42.8~~ psf 59.4

(P2) Perimeters: ~~71.7~~ psf 86.2

(P3) Corners: ~~100.7~~ psf 129.7

AR 3/27/14

Maximum Design Pressure From NOA: 52.5 psf

Roof Slope: .25 " : 12 Roof Mean Height: 12 ft.

Parapet Walls: ☐ No ☐ Yes Parapet wall Height: ft.

Deck Type: --5/8" Plywood--

Support Spacing: " o/c

Alternate Deck Type:

Existing Roof:

Fire Barrier:

Vapor Barrier:

Anchor Sheet:

Anchor Sheet Fastener / Bonding Material:

Insulation Base Layer Size & Thickness:

Insulation Base Layer Fastener / Bonding Material:

Insulation Top Layer Size & Thickness:

Insulation Top Layer Fastener / Bonding Material:

Base Sheet(s) & No. of Ply(s):

#75 BASE SHEET

Base Sheet Fastener / Bonding Material:

1 1/4 RS NAILS

Ply Sheet(s) & No. of Ply(s):

PLY IV (2)

Ply Sheet Fastener / Bonding Material:

ASPHALT TYPE IV

Top Ply:

MINERAL SURFACE CAPSHEET

Top Ply Fastening / Bonding Material:

ASPHALT TYPE IV

Surfacing:

SINGLE PLY MEMBRANE:

Single Ply Manufacturer / Type:

Single Ply Sheet Width: " 1/2 Sheet Width: "

No. of Single Ply 1/2 sheets:

Single Ply Membrane Fastening / Bonding Material:

☐ **FASTENER SPACING FOR BASESHEET ATTACHMENT**

☐ **SINGLE PLY MEMBRANE ATTACHMENT**

1. Field: 9 " o/c @ Laps & 2 rows 9 " o/c
2. Perimeter: 6 " o/c @ Laps & 4 rows 6 " o/c
3. Corner: 6 " o/c @ Laps & 4 rows 6 " o/c

NUMBER OF FASTENERS PER INSULATION BOARD:

1. Field: 2. Perimeter: 3. Corner:

Insulation Fastener Type :

WOOD NAILER TYPE AND SIZE:

Wood Nailer Fastener Type and Spacing:

EDGE & COPING METAL SIZES:

Edge Metal Material: --Galvanized Metal--

Edge Size: --3" face 26 ga.--

Hook Strip Size: --SELECT EDGE METAL HOOK STRIP SIZE--

Edge Metal Attachment:

1 1/4 RS NAILS

Coping Material: --SELECT PARAPET WALL COPING MATERIAL--

Coping Size: --SELECT COPING METAL SIZE OR THICKNESS--

Hook Strip Size: --SELECT COPING METAL HOOK STRIP SIZE--

Parapet Coping Metal Attachment:

AR

Edge Nailable Deck

MIAMI-DADE COUNTY

"Delivering Excellence Every Day"

Miami-Dade County HVHZ Electronic Roof Permit Form

Illustrate Components Noted and Details as Applicable:

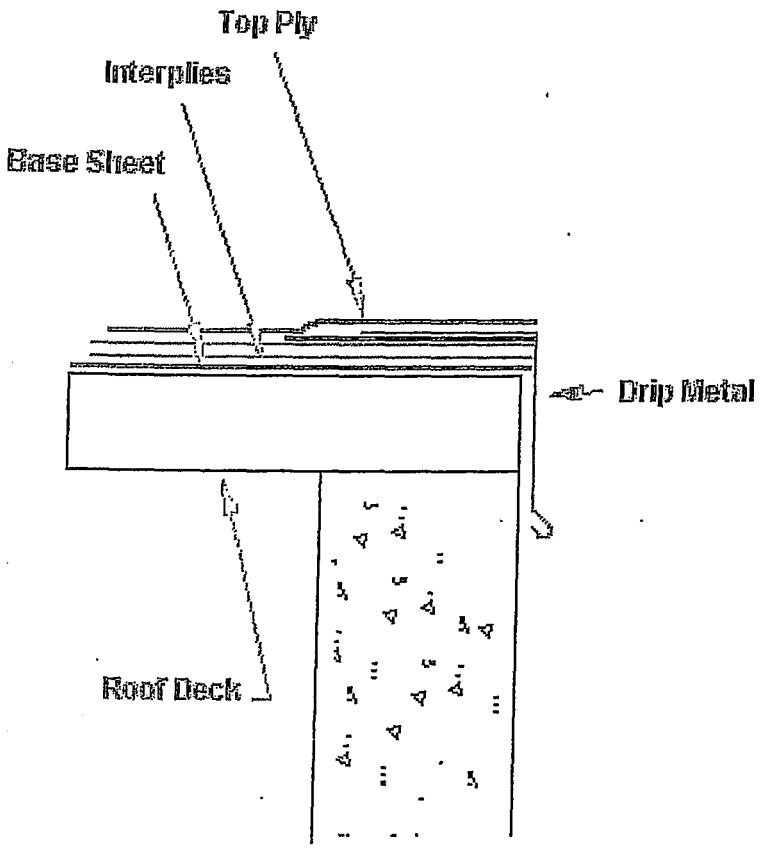

Roof Mean Height: 12 ft.

Drip Metal:
3X3 GALV 26 GA

Surfacing:

Top Ply:
MINERAL SURFACE CAPSHEET

Interplies:
PLY IV (2)

Base Sheet:
#75 BASE SHEET

Deck Type:
5/8 CDX PLYWOOD

AL

B1403002

MIAMI-DADE COUNTY
PRODUCT CONTROL SECTION
11805 SW 26 Street, Room 208
Miami, Florida 33175-2474
T (786)315-2590 F (786) 315-2599
www.miamidade.gov/economy

DEPARTMENT OF REGULATORY AND ECONOMIC RESOURCES (RER)
BOARD AND CODE ADMINISTRATION DIVISION

NOTICE OF ACCEPTANCE (NOA)

GAF
1361 Alps Road
Wayne, NJ 07470

SCOPE:

This NOA is being issued under the applicable rules and regulations governing the use of construction materials. The documentation submitted has been reviewed and accepted by Miami-Dade County RER -Product Control Section to be used in Miami Dade County and other areas where allowed by the Authority Having Jurisdiction (AHJ).

This NOA shall not be valid after the expiration date stated below. The Miami-Dade County Product Control Section (In Miami Dade County) and/or the AHJ (in areas other than Miami Dade County) reserve the right to have this product or material tested for quality assurance purposes. If this product or material fails to perform in the accepted manner, the manufacturer will incur the expense of such testing and the AHJ may immediately revoke, modify, or suspend the use of such product or material within their jurisdiction. RER reserves the right to revoke this acceptance, if it is determined by Miami-Dade County Product Control Section that this product or material fails to meet the requirements of the applicable building code.

This product is approved as described herein, and has been designed to comply with the Florida Building Code including the High Velocity Hurricane Zone of the Florida Building Code.

NOTICE: In addition to the requirements of this permit there may be additional restrictions applicable to this property that may be found in the public records of this County, and there may be additional permits required from other governmental entities such as water management districts, state agencies, or federal agencies. The City of Miami Beach assumes no responsibility for accuracy of results from these plans which are approved subject to compliance with all Federal, State, and Local Laws, Rules and Regulations

DESCRIPTION: GAF Conventional Built-Up Roof System for Wood Decks.

LABELING: Each unit shall bear a permanent label with the manufacturer's name or logo, city, state and following statement: "Miami-Dade County Product Control Approved", unless otherwise noted herein.

RENEWAL of this NOA shall be considered after a renewal application has been filed and there has been no change in the applicable building code negatively affecting the performance of this product.

TERMINATION of this NOA will occur after the expiration date or if there has been a revision or change in the materials, use, and/or manufacture of the product or process. Misuse of this NOA as an endorsement of any product, for sales, advertising or any other purposes shall automatically terminate this NOA. Failure to comply with any section of this NOA shall be cause for termination and removal of NOA.

ADVERTISEMENT: The NOA number preceded by the words Miami-Dade County, Florida, and followed by the expiration date may be displayed in advertising literature. If any portion of the NOA is displayed, then it shall be done in its entirety.

INSPECTION: A copy of this entire NOA shall be provided to the user by the manufacturer or its distributors and shall be available for inspection at the job site at the request of the Building Official.

This NOA revises and renews NOA No. 07-1219.09 consists of pages 1 through 17.
The submitted documentation was reviewed by Juan E. Collao, R.A.

MIAMI-DADE COUNTY APPROVED

Juan E. Collao

NOA No.: 13-0424.09
Expiration Date: 11/04/14
Approval Date: 10/31/13

ROOFING SYSTEM APPROVAL

Category:	Roofing
Sub-Category:	BUR
Material:	Fiberglass
Deck Type:	Wood
Maximum Design Pressure:	-75 psf

TRADE NAMES OF PRODUCTS MANUFACTURED OR LABELED BY APPLICANT:

TABLE 1

Product	Dimensions	Test Specification	Product Description
GAFGLAS® #75 Base Sheet	39.37" (1 meter) Wide	ASTM D 4601	Type II asphalt impregnated and coated glass mat base sheet.
GAFGLAS® #80 Ultima™ Base Sheet	39.37" (1 meter) Wide	ASTM D 4601	Type II asphalt impregnated and coated, fiberglass base sheet.
GAFGLAS® FlexPly™ 6	39.37" (1 meter) Wide	ASTM D 2178	Type VI asphalt impregnated glass felt with asphalt coating.
GAFGLAS® Ply 4	39.37" (1 meter) Wide	ASTM D 2178	Type IV asphalt impregnated glass felt with asphalt coating.
GAFGLAS® Mineral Surfaced Cap Sheet	39.37" (1 meter) Wide	ASTM D 3909	Asphalt coated, glass fiber mat cap sheet surfaced with mineral granules.
GAFGLAS® EnergyCap™ BUR Mineral Surface Cap Sheet	39.37" (1 meter) wide	ASTM D3909	Asphalt coated, glass fiber mat cap sheet surfaced with mineral granules with factory applied EnergyCote™
GAFGLAS® Stratavent® Eliminator™ Perforated Venting Base Sheet	39.37" (1 meter) Wide	ASTM D 4897	Fiberglass base sheet coated on both sides with asphalt. Surfaced on the bottom side with mineral granules embedded in asphaltic coating with factory perforations.
GAFGLAS® Stratavent® Eliminator™ Nailable Venting Base Sheet	39.37" (1 meter) Wide	ASTM D 4897	A nailable, fiberglass base sheet impregnated and coated on both sides with asphalt. Surfaced on the bottom side with mineral granules embedded in asphaltic coating.
Ruberoid® SBS Heat-Weld™ Smooth	39.37" (1 meter) Wide	ASTM D 6164	Non-Woven Polyester mat coated with polymer-modified asphalt and smooth surfaced.
Ruberoid® SBS Heat-Weld™ 25	39.37" (1 meter) Wide	ASTM D 6164	Non-Woven Polyester mat coated with polymer-modified asphalt and smooth surfaced.
Ruberoid® 20	39.37" (1 meter) Wide	ASTM D 6163	SBS modified asphalt base sheet reinforce with a glass fiber mat.

TRADE NAMES OF PRODUCTS MANUFACTURED OR LABELED BY APPLICANT:

TABLE 1

Product	Dimensions	Test Specification	Product Description
Ruberoid® Mop Smooth	39.37" (1 meter) wide	ASTM D 6164	Non-woven polyester mat coated with polymer-modified asphalt and smooth surfaced.
FireOut™ Fire Barrier Coating	5, 55 gallons	Proprietary	Low VOC, water based fire barrier coating.
VersaShield® Fire Resistant Roof Deck Protection	350 sq ft. roll	ASTM D 226	Non-Asphaltic Fiberglass-Based Underlayment.
Topcoat® Surface Seal SB	5 gallons	ASTM D 6083	Solvent based sprayable thermoplastic rubber sealant designed to protect and restore aged roof surfaces and to increase a roof's reflectivity.

APPROVED INSULATIONS:

TABLE 2

Product Name	Product Description	Manufacturer (With Current NOA)
EnergyGuard™ Polyiso Insulation	Polyisocyanurate foam insulation	GAF
EnergyGuard™ RA Polyiso Insulation	Polyisocyanurate foam insulation	GAF
EnergyGuard™ RN Polyiso Insulation	Polyisocyanurate foam insulation	GAF
EnergyGuard™ Perlite Roof Insulation	Perlite insulation board.	GAF
EnergyGuard™ Perlite Recover Board	Perlite recover board	GAF
EnergyGuard™ RA Composite Polyiso Insulation	Polyisocyanurate foam insulation with high density fiberboard or Permalite perlite insulation	GAF
Securock® Gypsum-Fiber Roof Board	Gypsum roof board	USG Corporation
Structodek® High Density Fiber Board	High density fiber board	Blue Ridge FiberBoard, Inc.

APPROVED FASTENERS:

TABLE 3

Fastener Number	Product Name	Product Description	Dimensions	Manufacturer (With Current NOA)
1.	Drill-Tec™ #12 Fastener	Insulation fastener for steel, wood & concrete decks.	various	GAF
2.	Drill-Tec™ #14 Fastener	Insulation fastener for steel, wood & concrete decks.	various	GAF
3.	Drill-Tec™ XHD Fastener	Carbon steel extra heavy duty fastener used in steel decks.	Various	GAF
4.	Drill-Tec™ ASAP 3S	Drill-Tec™ #12 Fastener with Drill-Tec™ 3" Standard Steel Plate	Various	GAF
5.	Drill-Tec™ 3" Steel Plate	Round galvalume stress plate used with Drill-Tec™ fasteners.	3" round	GAF
6.	Drill-Tec™ 3" Standard Steel Plate	Round galvalume plated steel stress plate with reinforced ribs for use with Drill-Tec™ fasteners.	3" round	GAF
7.	Drill-Tec™ AccuTrac® Flat Plate	AZ-SS aluminized steel plate for use with Drill-Tec™ #12 Fastener, Drill-Tec™ #14 Fastener and Drill-Tec™ #15 Fastener.	3" square	GAF
8.	Drill-Tec™ AccuTrac® Recessed Plate	Galvalume Steel plate for use with Drill-Tec™ fasteners.	3" square	GAF

EVIDENCE SUBMITTED:

Test Agency	Test Identifier	Description	Date
Factory Mutual Research Corp.	J.I. 2B8A4.AM	4470	07/02/97
	J.I. 3B9Q1.AM	4470	01/08/98
	J.I. 0D0A8.AM	4470	07/09/99
	J.I. 0D1A8.AM	4470 - TAS 114	07/29/94
	J.I. 0Y9Q5.AM	4470 - TAS 114	04/01/98
	3029832	4470 - TAS 114	05/11/07
PRI Asphalt Technologies, Inc.	GAF-084-02-01	ASTM D 6083	05/09/06
	GAF-314-02-01	ASTM D 2178	08/23/11
	GAF-315-02-01	ASTM D 2178	08/23/11
	GAF-276-02-01Rev	ASTM D 6083	12/16/10
	GAF-276-02-02	ASTM D 226	11/15/10
	GAF-270-02-02	ASTM D 226	11/15/10
IRT of S. Fl.	02-005	TAS 114	01/18/02
	02-014	TAS 114	03/22/02
Trinity | ERD	G6850.08.07-1	ASTM D 3909	08/13/07
	G34140.04.11-4	ASTM D 6401	04/25/11
	G30250.02.10-3-R1	ASTM D 3909	11/26/12
	G34140.04.11-5	ASTM D 4897	04/25/11
	G34140.04.11-5-R1	ASTM D 4897	10/18/13
	G34140.04.11-2	ASTM D 6163	04/25/11

MIAMI-DADE COUNTY APPROVED

Deck Type 1: Wood, Non-insulated

Deck Description: $^{19}/_{32}$" or greater plywood or wood plank decks

System Type E: Base sheet mechanically fastened.

All General and System Limitations shall apply.

Fire Barrier: (optional) FireOut™ Fire Barrier Coating, VersaShield® Fire Resistant Roof Deck Protection or Securock™ Gypsum Fiber Roof Board.

Base sheet: GAFGLAS® #80 Ultima™ Base Sheet, Stratavent® Eliminator™ Nailable Venting Base Sheet, Ruberoid® 20, Ruberoid® SBS Heat-Weld™ Smooth or Ruberoid® SBS Heat-Weld™ 25 base sheet mechanically fastened to deck as described below;

Fastening Options: GAFGLAS® Ply 4, GAFGLAS® FlexPly™ 6, GAFGLAS® #75 Base Sheet or any of above base sheets attached to deck with approved annular ring shank nails and tin caps at a fastener spacing of 9" o.c. at the lap staggered and in two rows 12" o.c. in the field.
(Maximum Design Pressure –45 psf, See General Limitation #7)

GAFGLAS® Ply 4, GAFGLAS® FlexPly™ 6, GAFGLAS® #75 Base Sheet or any of above base sheets attached to deck with Drill-Tec™ #12 Fastener or Drill-Tec™ #14 and Drill-Tec™ 3" Steel Plate, Drill-Tec™ AccuTrac® Flat Plate or Drill-Tec™ AccuTrac® Recessed Plate 12" o.c. in 3 rows. One row is in the 2" side lap. The other rows are equally spaced approximately 12" o.c. in the field of the sheet.
(Maximum Design Pressure –45 psf, See General Limitation #7)

GAFGLAS® Flex Ply™ 6, GAFGLAS® #75 Base Sheet or any of above base sheets attached to deck with approved annular ring shank nails and tin caps at a fastener spacing of 9" o.c. at the 4" lap staggered and in two rows 9" o.c. in the field.
(Maximum Design Pressure –52.5 psf, See General Limitation #7)

GAFGLAS® #80 Ultima™ Base Sheet, Ruberoid® 20, Ruberoid® Mop Smooth, base sheet attached to deck with approved 1¼" annular ring shank nails and inverted 3" steel plate at a fastener spacing of 9" o.c. at the 4" lap and in two rows staggered with a fastener spacing of 9" o.c. in the center of the membrane.
(Maximum Design Pressure –60 psf, See General Limitation #7)

GAFGLAS® #75 Base Sheet or any of above base sheets attached to deck with Drill-Tec™ #12 Fastener or Drill-Tec™ #14 Fastener and Drill-Tec™ 3" Steel Plate, Drill-Tec™ AccuTrac® Flat Plate or Drill-Tec™ AccuTrac® Recessed Plate 12" o.c. in 4 rows. One row is in the 2" side lap. The other rows are equally spaced approximately 9" o.c. in the field of the sheet.
(Maximum Design Pressure –60 psf, See General Limitation #7)

Any of above Base sheets attached to deck approved annular ring shank nails and 3" inverted Drill-Tec™ insulation plates at a fastener spacing of 9" o.c. at the 4" lap staggered in two rows 9" in the field.
(Maximum Design Pressure –60 psf, See General Limitation #7)

GAFGLAS® #75 Base Sheet or any of above base sheets attached to deck with Drill-Tec™ #12 Fastener or Drill-Tec™ #14 Fastener and Drill-Tec™ 3" Steel Plate, Drill-Tec™ AccuTrac® Flat Plate or Drill-Tec™ AccuTrac® Recessed Plate 8" o.c. in 4 rows. One row is in the 2" side lap. The other rows are equally spaced approximately 9" o.c. in the field of the sheet.
(Maximum Design Pressure –75 psf, See General Limitation #7)

Ply Sheet: One or more plies of GAFGLAS® Ply 4 or GAFGLAS® #80 Ultima Base Sheet adhered in a full mopping of approved asphalt applied within the EVT range and at a rate of 20-40 lbs./sq.

Cap Sheet: (Optional) One ply of GAFGLAS® Mineral Surfaced Cap Sheet or GAFGLAS® EnergyCap™ BUR Mineral Surfaced Cap Sheet adhered in a full mopping of approved asphalt applied within the EVT range and at a rate of 20-40 lbs./sq.

Surfacing: **Optional on granular surfaced membranes; required for smooth membranes. Chosen components must be applied according to manufacturer's application instructions.**

1. Gravel or slag applied at 400 lbs./sq. and 300 lbs./sq. respectively in a flood coat of approved asphalt at 60 lbs./sq.
2. Topcoat® Surface Seal SB applied at 1to 1.5 gal./sq.

Maximum Design Pressure: See Fastening Above

WOOD DECK SYSTEM LIMITATIONS:

1 A slip sheet is required with GAFGLAS® Ply 4 and GAFGLAS® Flex Ply™ 6 when used as a mechanically fastened base or anchor sheet.
2. Minimum ¼" Dens Deck™ Roof Board or ½" Type X gypsum board is acceptable to be installed directly over the wood deck.

GENERAL LIMITATIONS:

1. Fire classification is not part of this acceptance; refer to a current Approved Roofing Materials Directory for fire ratings of this product.
2. Insulation may be installed in multiple layers. The first layer shall be attached in compliance with Product Control Approval guidelines. All other layers shall be adhered in a full mopping of approved asphalt applied within the EVT range and at a rate of 20-40 lbs./sq., or mechanically attached using the fastening pattern of the top layer
3. All standard panel sizes are acceptable for mechanical attachment. When applied in approved asphalt, panel size shall be 4' x 4' maximum.
4. An overlay and/or recovery board insulation panel is required on all applications over closed cell foam insulations when the base sheet is fully mopped. If no recovery board is used the base sheet shall be applied using spot mopping with approved asphalt, 12" diameter circles, 24" o.c.; or strip mopped 8" ribbons in three rows, one at each sidelap and one down the center of the sheet allowing a continuous area of ventilation. Encircling of the strips is not acceptable. A 6" break shall be placed every 12' in each ribbon to allow cross ventilation. Asphalt application of either system shall be at a minimum rate of 12 lbs./sq. **Note: Spot attached systems shall be limited to a maximum design pressure of -45 psf.**
5. Fastener spacing for insulation attachment is based on a Minimum Characteristic Force (F') value of 275 lbf., as tested in compliance with Testing Application Standard TAS 105. If the fastener value, as field-tested, are below 275 lbf. insulation attachment shall not be acceptable.
6. Fastener spacing for mechanical attachment of anchor/base sheet or membrane attachment is based on a minimum fastener resistance value in conjunction with the maximum design value listed within a specific system. Should the fastener resistance be less than that required, as determined by the Building Official, a revised fastener spacing, prepared, signed and sealed by a Florida Registered Professional Engineer, Registered Architect, or Registered Roof Consultant may be submitted. Said revised fastener spacing shall utilize the withdrawal resistance value taken from Testing Application Standards TAS 105 and calculations in compliance with Roofing Application Standard RAS 117.
7. Perimeter and corner areas shall comply with the enhanced uplift pressure requirements of these areas. Fastener densities shall be increased for both insulation and base sheet as calculated in compliance with Roofing Application Standard RAS 117. Calculations prepared, signed and sealed by a Florida registered Professional Engineer, Registered Architect, or Registered Roof Consultant **(When this limitation is specifically referred within this NOA, General Limitation #9 will not be applicable.)**
8. All attachment and sizing of perimeter nailers, metal profile, and/or flashing termination designs shall conform to Roofing Application Standard RAS 111 and applicable wind load requirements.
9. The maximum designed pressure limitation listed shall be applicable to all roof pressure zones (i.e. field, perimeters, and corners). Neither rational analysis, nor extrapolation shall be permitted for enhanced fastening at enhanced pressure zones (i.e. perimeters, extended corners and corners). **(When this limitation is specifically referred within this NOA, General Limitation #7 will not be applicable.)**
10. All products listed herein shall have a quality assurance audit in accordance with the Florida Building Code and Rule 9N-3 of the Florida Administrative Code.

END OF THIS ACCEPTANCE

ONLINE CERTIFICATIONS DIRECTORY

TGFU.R1306
Roofing Systems

Page Bottom

Roofing Systems

See General Information for Roofing Systems

BUILDING MATERIALS CORP OF AMERICA, DBA GAF R1306
1361 ALPS RD
WAYNE, NJ 07470 USA

"Ruberoid® 20" or "Ruberoid® 20 HT" or "Ruberoid® Modified Base Sheet" may be utilized as an alternate to Type G2 base sheets in any of the following Classifications.

1/2-in. thick (minimum) gypsum board or 1/4-in. thick (minimum) Georgia-Pacific Gypsum LLC "DensDeck® Roofboard," "DensDeck Prime® Roofboard" or "DensDeck DuraGuard™ Roofboard" may be used in any existing noncombustible deck Classification. When this is done, the resulting roofing system is acceptable for use over combustible (15/32-in. thick minimum) roof decks. However, the butt joints in the gypsum board and Georgia-Pacific Gypsum LLC "DensDeck® Roofboard," "DensDeck Prime® Roofboard" or "DensDeck DuraGuard™ Roofboard" are to offset a minimum of 6-in. with the butt joints in the roof deck. If polystyrene is part of the roof system, it must be placed below the overlayment board.

Multiple plies of "GAFGLAS® Ply 4" or "Tri-Ply® Ply 4" or "Tri-Ply® Ply 6" may be adhered to Georgia-Pacific Gypsum LLC "DensDeck® Roofboard," "DensDeck Prime® Roofboard" or "DensDeck DuraGuard™ Roofboard" in hot roofing asphalt.

"EnergyGuard™ Ultra" is an acceptable alternate to "EnergyGuard™ RF" in any applicable Classification.

"GAF Stratavent® Eliminator™ Venting Base Sheet (Nailable)" may be mechanically attached or hot mopped over noncombustible decks and as a recover over existing roof systems.

"GAFGLAS® Perlite Insulation" may be utilized as a cover board over "EnergyGuard™ RF" insulation in any of the following systems.

Unless otherwise indicated, the roof insulation is mechanically fastened, adhered with hot mopping asphalt or UL Classified urethane insulation adhesive. Polystyrene referenced in any of the following Classifications include "EnergyGuard™ EPS Insulation".

Unless otherwise indicated, all insulations may be adhered with any UL Classified Insulation Adhesive per the manufacturer's installation instructions (excluding LRF Adhesive O) in any applicable Non-Combustible Roof Deck Classifications.

References to glass fiber insulation include "EnergyGuard Fiberglass Insulation".

"EnergyGuard™ Tapered" is an acceptable alternate to "EnergyGuard™" in any applicable Classification.

ASPHALT FELT SYSTEMS WITH HOT ROOFING ASPHALT

Type G2 asphalt glass mat base sheet ("GAFGLAS® #75 Base Sheet" or "Tri-Ply® #75 Base Sheet", or "GAFGLAS® #80 ULTIMA") is a suitable alternate for Type G1 asphalt glass fiber ply sheet ("GAFGLAS® Ply 4" or "Tri-Ply® Ply 4", or "GAFGLAS® Ply 6") in the Class A, B or C roof systems indicated below.

The roof deck may first be covered with one ply Type G2 asphalt saturated glass mat base sheet "GAF Stratavent® Eliminator™ Venting Base Sheet (Perforated)" or "GAF Stratavent® Eliminator™ Venting Base Sheet (Nailable)." Perforated base sheets to be loose laid or fully adhered with hot roofing asphalt and nailable base sheets are to be mechanically attached granule side down.

As an option Type G2 asphalt glass mat base sheet ("GAFGLAS® #75 Base Sheet" or "Tri-Ply® #75 Base Sheet" or "GAFGLAS® #80 ULTIMA" or "GAF Stratavent® Eliminator™ Venting Base Sheet (Nailable)" may be substituted for Type G1 asphalt glass fiber ply sheet ("GAFGLAS® Ply 4" or "Tri-Ply® Ply 4" or "GAFGLAS® Ply 6") as the nailed base ply in the following systems.

Bottom ply or base sheet may be solid mopped, spot mopped or mechanically fastened.

Unless otherwise indicated, all insulations may be hot mopped or mechanically fastened.

"GAFGLAS® Flashing" or "Ruberoid®" may be used for flashing in any of the Class A, B or C systems listed below.

When "perlite" is referenced, this includes "GAFTEMP PERMALITE®" or any other UL Classified perlite insulation.

Crushed stone or slag are suitable alternates for gravel in any of the Class A, B or C systems listed.

Structural cement fiber building units are considered suitable to be included as a deck in the following Class A, B or C systems listed over C-15/32 or NC.

The use of gypsum board under any of the following Class A, B or C systems does not adversely affect the rating. The use of ½-in. minimum thick gypsum board is an acceptable alternate for minimum insulation over C-15/32 thick roof decks.

The use of polystyrene insulation board between minimum ¾-in. thick perlite board and deck with rosin paper (perlite/rosin paper/polystyrene/perlite) is a suitable alternate for polyisocyanurate board in the following Class A, B or C systems.

"EnergyGuard™ RA" or "Tapered EnergyGuard™ RA" or "EnergyGuard™ Composite RA" may be substituted for any Atlas Roofing Corp. polyisocyanurate insulation in any of the following Classifications.

Trumbull "Perma Mop" may be utilized with any of the following "Asphalt Felt Systems with Hot Roofing Asphalt".

"GAFGLAS® #80 Premium Base Sheet" may be used in any of the following systems.

"GAFGLAS® Flex Ply 6" and "Tri-Ply® Ultra-Flexible Ply 6" are suitable alternates to "GAFGLAS® Ply 6".

"GAFTEMP Permalite Recover Board" may be used in lieu of any perlite insulation in any of the following NC Classifications.

Unless otherwise indicated, any of the "Asphalt Felt Systems with Hot Roofing Asphalt" may be surfaced with "Fireshield MB" at 2½ to 3-gal/100-ft^2.

"Ruberoid® Dual Smooth" may be used as an alternate to "Ruberoid® Mop Smooth" or "Ruberoid® 20" or "Ruberoid® 20 HT"

"Ruberoid® Mop Smooth 1.5" may be used as an alternate to "Ruberoid® Mop Smooth"

Class A, B and C

Hot roofing asphalt, for use with organic and glass felts or modified bitumen membranes.

"Ruberoid® Heat Weld" SBS roofing membrane may be used in lieu of "Ruberoid® Mop" SBS products in any applicable Classification.

Class A

1. **Deck:** C-15/32 **Incline:** 3

Insulation (Optional): — One or more layers perlite or wood fiber or glass fiber or polyisocyanurate or urethane or perlite/polyisocyanurate composite or perlite/urethane composite or wood fiber/polyisocyanurate composite or phenolic, any thickness.
Ply Sheet: — Three or more plies Type G1 or "GAFGLAS® Ply 4" or "Tri-Ply® Ply 4" or "GAFGLAS® Ply 6" hot mopped.
Surfacing: — Gravel.

2. **Deck:** C-15/32 **Incline:** 2

Insulation (Optional): — One or more layers perlite or wood fiber or glass fiber or polyisocyanurate or urethane or perlite/polyisocyanurate composite or perlite/urethane composite or wood fiber/polyisocyanurate composite or phenolic, any thickness.
Ply Sheet: — Three or more plies Type G1 or "GAFGLAS® Ply 4" or "Tri-Ply® Ply 4" or "GAFGLAS® Ply 6".
Cap Sheet: — One ply Type G3 "GAFGLAS® Mineral Surfaced Cap Sheet" or "Tri-Ply® Mineral Surfaced Cap Sheet " or "GAFGLAS® EnergyCap™ BUR Mineral Surfaced Cap Sheet."

3. **Deck:** NC **Incline:** 2

Insulation (Optional): — One or more layers perlite, wood fiber, glass fiber, polyisocyanurate, urethane, perlite/polyisocyanurate composite, perlite/urethane composite, wood fiber/polyisocyanurate composite, phenolic, 2-in. maximum.
Ply Sheet: — Two or more plies Type G1 "GAFGLAS® Ply 4", "Tri-Ply® Ply 4" or "GAFGLAS® Ply 6".
Cap Sheet: — One ply Type G3 "GAFGLAS® Mineral Surfaced Cap Sheet" or "Tri-Ply® Mineral Surfaced Cap Sheet" or "GAFGLAS® EnergyCap™ BUR Mineral Surfaced Cap Sheet."

4. **Deck:** C-15/32 **Incline:** 1

Slip Sheet (Optional): — Red rosin paper, nailed to deck.
Insulation (Optional): — Any thickness perlite or wood fiber or glass fiber or polyisocyanurate mechanically fastened or adhered with OMG Inc. "OlyBond Fastening System" or any UL Classified insulation adhesive.
Base Sheet: — One ply Type G2 "GAFGLAS® #75 Base Sheet" or "Tri-Ply® #75 Base Sheet" (may be nailed).
Ply Sheet: — One or more plies Type G1 "GAFGLAS® Ply 4" or "Tri-Ply® Ply 4" or GAFGLAS® Ply 6".
Cap Sheet: — One ply Type G3 "GAFGLAS® Mineral Surfaced Cap Sheet" or "Tri-Ply® Mineral Surfaced Cap Sheet" or "GAFGLAS® EnergyCap™ BUR Mineral Surfaced Cap Sheet."
Surfacing (Optional): — "TOPCOAT® EnergyCote™" applied at a rate of 2-gal/100-ft^2.

5. **Deck:** NC **Incline:** 3

Base Sheet: — One ply Type G2 "GAFGLAS® #75 Base Sheet" or "Tri-Ply® #75 Base Sheet".
Ply Sheet: — One or more plies Type G1 "GAFGLAS® Ply 4" or "Tri-Ply® Ply 4" or "GAFGLAS® Ply 6".
Cap Sheet: — One ply Type G3 "GAFGLAS® Mineral Surfaced Cap Sheet" or "Tri-Ply® Mineral Surfaced Cap Sheet" or "GAFGLAS® EnergyCap™ BUR Mineral Surfaced Cap Sheet."

6. **Deck:** C-15/32 **Incline:** 2

Insulation: — One or more layers perlite, glass fiber, polyisocyanurate, urethane, perlite/polyisocyanurate composite, perlite/urethane composite, phenolic, 1 in. minimum (offset a minimum of 6-in. from plywood deck joints).
Base Sheet: — One or more plies Type G1 or Type G2 or Type G3.
Membrane: — One or more plies "Ruberoid® Torch Smooth" or "Ruberoid® Torch Granule" or "Ruberoid® Torch Granule Plus" or "Ruberoid® Mop Smooth" or "Ruberoid® Mop Smooth 1.5" or "Ruberoid® Mop Smooth Plus" or "Ruberoid® Mop Granule" or "Ruberoid® Mop Plus Granule" or "ROOFMatch™ SBS Modified Granular" or "Tri-Ply® SBS Modified Bitumen Membrane" or "ROOFMatch™ APP Modified Granular" or "Tri-Ply® TP-4G" or "Tri-Ply® TP-4" or "Ruberoid® Dual Smooth".
Cap Sheet: — Type G3 "GAFGLAS® Mineral Surfaced Cap Sheet" or "Tri-Ply® Mineral Surfaced Cap Sheet"or "GAFGLAS® EnergyCap™ BUR Mineral Surfaced Cap Sheet" fully adhered with hot roofing asphalt.

7. **Deck:** C-15/32 **Incline:** 2

Insulation (Optional): — One or more layers perlite or wood fiber or glass fiber or polyisocyanurate or urethane or perlite/polyisocyanurate composite or perlite/urethane composite or wood fiber/polyisocyanurate composite or phenolic, any thickness.
Base Sheet: — Two or more plies Type G2 or Type G3.
Ply Sheet (Optional): — One or more plies Type G1.
Membrane: — One or more plies "Ruberoid® Torch Smooth" or "Ruberoid® Torch Granule" or "Ruberoid® Torch Granule Plus" or "Ruberoid® Mop Smooth" or "Ruberoid® Mop Smooth 1.5" or "Ruberoid® Mop Smooth Plus" or "Ruberoid® Mop Granule" or "Ruberoid®

B1403002

250 E RIVO ALTO

DR.

03-31-17

CWB

BE132763/B1300519
250 E RIVO ALTO DR

LOAD CALCULATIONS

NEW 400A METER COMBO (SEE DIAGRAM BELOW) 1

Description:	Amps	Volts	Watts (kW) Adjusted	Demand Factor	Qty	NEC Article	Unit kW	HP
Clothes Dryer	20.8	240	5.0	100.0%	1	220.82B3	5.0	
Clothes Washer	12.5	120	1.5	100.0%	1	220.82B2	1.5	
Kitchen Small Appliance	25.0	120	3.0	100.0%	2	220.82B2	1.5	
Water Heater	18.0	240	4.5	100.0%	1	220.82B3	4.5	
Stove	39.0	240	9.5	100.0%	1	220.82B3	9.5	
Total:			23.5					
Square foot of house 3w x 4200			12.6				36.1	
First 10kw:	41.7	240	10.0	100.0%		220.82B	10.0	
Remaining kw:	43.5	240	10.4	40.0%		220.82B	26.1	
A/C Heat Mode	41.0	240	0.0	100.0%	0	220.82C3	7.0	
A/C Heat Mode	35.0							
Proposed Additions (Pool):								
Light	2.5	120	0.3	100.0%	3	220.83B3	0.01	
Pool Pump	6.2	240	1.5	100.0%	1	220.83B3		1.5
Spa Pump	8.0	240	1.9	100.0%	1	220.83B3		2.0
Air Blower	6.2	240	1.5	100.0%	1	220.83B3		2.0
Pool Heat Pump	27.0	240	6.5	100.0%	1	220.83B	6.5	
Pool Sub Totals	49.9	240	11.7			Minimum pool sub panel ampacity		16
Total Estimated Load:	133.8	240	32.1					
						Recommended pool sub panel ampacity		125.0
SERVICE AMPACITY	400	240	96.0					
Percentage Of Capacity Used:			33.45%					

SERVICE UP GRADE FROM 200A TO 400A.

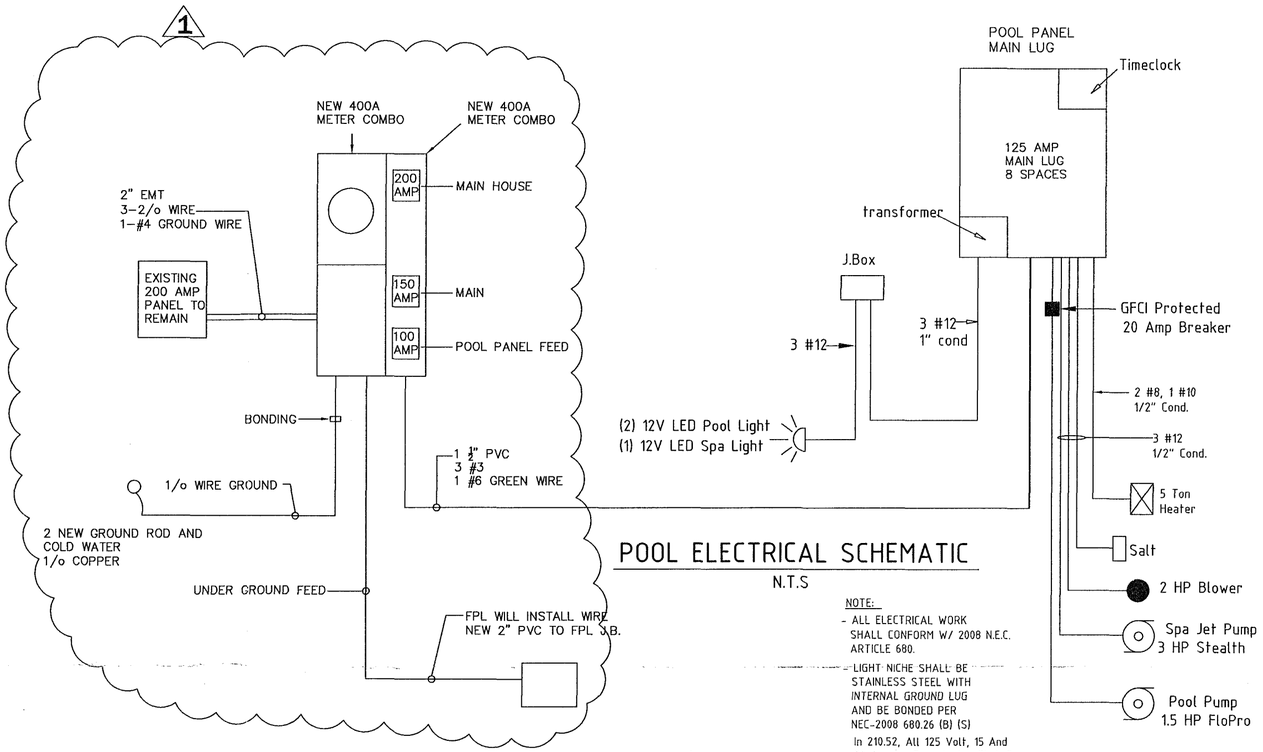

POOL ELECTRICAL SCHEMATIC

N.T.S

NOTE:
- ALL ELECTRICAL WORK SHALL CONFORM W/ 2008 N.E.C. ARTICLE 680.
- LIGHT NICHE SHALL BE STAINLESS STEEL WITH INTERNAL GROUND LUG AND BE BONDED PER NEC-2008 680.26 (B) (5)

In 210.52, All 125 Volt, 15 And 20 Ampere Receptacles Shall Be Listed Tamper-resistant Receptacles. NEC 406.11

NOTICE: In addition to the requirement of this permit, there may be additional restrictions applicable to this property that may be found in the Public Records of this County and there may be additional permits required from other government entities such as water management's districts, state agencies, or federal agencies.
The City of Miami Beach assumes no responsibility for accuracy of or results from these plans which are approved subject to compliance with all Federal, State, and Local Laws, Rules, and Regulations.

OFFICE COPY
CITY OF MIAMI BEACH
APPROVED FOR PERMIT BY
THE FOLLOWING:

BUILDING:
ZONING:
DRB/HPB:
CONCURRENCY:
PLUMBING:
ELECTRICAL: 07/08/13
MECHANICAL:
FIRE PREVENTION:
ENGINEERING:
PUBLIC WORKS:
STRUCTURAL:
ELEVATOR:

Van Kirk & Sons, Inc
POOLS & SPAS
3144 SW 13th DRIVE
DEERFIELD BEACH, FL. 33442
(954) 755-4402

So Be Gorgeous, Inc.
Lot 4 Block B
Subdivision: Rivo Alto Amended
Address: 250 E. Rivo Alto Drive
City: Miami Beach, Fl. 33139

DRAWN DATE: 01.23.13
ORDER: 344
JOB NO.: SOB-13-206
SALESMAN.: STEVE SCHWARTZ
DRAWN BY: M.L.
REVISION:
1 07.02.13 ELECTRICAL UPGRADED.

yka CONSULTING ENGINEERS, INC.
A. YEKTA KAVASOGLU, MSCE. P.E.
FL. REG. #41310, CA #06141
6500 W. ROGERS CIRCLE. SUITE 8000
BOCA RATON, FLORIDA 33487
(954) 655-6666
(561) 423-6424 (FAX)
www.ykace.com
info@ykace.com
yka.usa@gmail.com

ABBREVIATIONS:

A	ANCHOR	HORIZ	HORIZONTAL
A/C	AIR CONDITIONING	H.B.	HOSE BIBB
ACOUST	ACOUSTICAL	I.D.	INTERIOR DIMENSION
ACP	ACOUSTICAL CEILING PANEL	INSUL.	INSULATION
AFF.	ABOVE FINISH FLOOR	INTERM	INTERMEDIATE
AL OR ALUM	ALUMINUM	JAN.	JANITOR
ANOD.	ANODIZE	MANUF.	MANUFACTURER
BD	BOARD	MAT	MATERIAL
BLK'G	BLOCKING	MAX	MAXIMUM
BLK	BLOCK	MIN.	MINIMUM
CEM	CEMENT	MTL	METAL
CER	CERAMIC	N.I.C.	NOT IN CONTRACT
C.J.	CONTROL JOINT	NEOPR	NEOPRENE
CLG	CEILING	O.D.	OUTSIDE DIMENSION
COL	COLUMN	O.C.	ON CENTER
CONC.	CONCRETE	O.S.	OVERFLOW SCUPPERS
CONT.	CONTINUOUS	PTN	PARTITION
COVER'G	COVERING	PJ	PANEL JOINT
DBL	DOUBLE	PL	PLATE
DIM	DIMENSION	L.P.	LIGHT POLE
DET	DETAILS	PLYWD	PLYWOOD
E.A.	EACH	PNL	PANEL
ELECT/ELEC	ELECTRICAL	PLAM	PLASTIC LAMINATE
EL.	ELEVATION	P.T.	PRESSURE TREATED
ELEV.	ELEVATOR	REINF.	REINFORCING
EXH.	EXHAUST	REQ'D	REQUIRED
EXIST	EXISTING	RM	ROOM
EXP.	EXPANSION	R.D.	ROOF DRAIN
EXT.	EXTERIOR	SHT	SHEET
F.D.	FLOOR DRAIN	SCH	SCHEDULE
F.E.	FIRE EXTINGUISHER	S.S.	STAINLESS STEEL
FIRE EXT. CAB.	FIRE EXTINGUISHER CABINET	STL	STEEL
F.O.I.C.	FURNISHED BY OWNER, INSTALLED BY CONTRACTOR	STD.	STANDARD
		SECT	SECTION
FLUOR	FLUORESCENT	SIM	SIMILAR
FIN.	FINISH	SPEC'S	SPECIFICATIONS
GA	GAUGE	STRUCT	STRUCTURE
GWB	GYPSUM WALL BOARD	SCWD	SOLID CORE WOOD
GYP. BD.	GYPSUM BOARD	TEL	TELEPHONE
GALV.	GALVANIZED	TEMP	TEMPERED
GS	GALVANIZED STEEL	VCT	VINYL COMPOSITION TILE
GL	GLASS	VERT	VERTICAL
HM	HOLLOW METAL	VEST.	VESTIBULE
HT	HEIGHT		

SYMBOLS:

Symbol	Notation
NORTH ARROW	
WALL SECTION	1 / A1.1
BUILDING SECTION	SECTION NO. 1 / A1.1 — SHT. ON WHICH SECTION IS SHOWN OR CALLED OUT (PLAN, ELEVATION)
COLUMN REFERENCE GRIDS	1, A
DETAIL CALLOUT	1 / A1.1 — DETAIL NUMBER; SHEET ON WHICH DETAIL IS SHOWN
BUILDING ELEVATIONS	1 A1.1 — DETAIL NUMBER; SHEET ON WHICH ELEVATION IS SHOWN
INTERIOR ELEVATIONS	1 A1.1 — DETAIL NUMBER; SHEET ON WHICH ELEVATION IS SHOWN
ROOM TAG	ROOM 101 — ROOM NAME; ROOM NUMBER
DOOR NUMBER	1
WINDOW TYPE	1
ELEVATION	ELEVATION NGVD RELATED
KEYNOTE	1
WALL TYPE	A

GENERAL NOTES:

1. THE CONTRACTOR SHALL VISIT THE PREMISES AND THOROUGHLY FAMILIARIZE HIMSELF WITH ALL DETAILS OF THE WORK AND WORKING CONDITIONS, VERIFY ALL DIMENSIONS IN THE FIELD, AND ADVISE THE ARCHITECT / ENGINEER OF ANY DISCREPANCIES BEFORE PERFORMING THE WORK.

2. THE CONTRACTOR SHALL PERFORM ALL WORK REQUIRED UNDER THIS CONTRACT FOR A COMPLETE INSTALLATION AND IN SUCH MANNER THAT SURFACES NOT AFFECTED BY REMOVAL OF EXISTING OR FROM NEW WORK SHALL REMAIN UNDISTURBED AND NORMAL ACTIVITIES AT THE INSTALLATION MAY CONTINUE WITH THE LEAST POSSIBLE INTERFERENCE. ALL DEBRIS SHALL BE REMOVED FROM THE SITE OF THE WORK AT THE END OF EACH WORKING DAY. MATERIALS AND EQUIPMENT SHALL BE STORED ONLY AT LOCATIONS APPROVED BY THE ARCHITECT / ENGINEER AND OWNER'S REPRESENTATIVE.

3. THE CONTRACTOR SHALL BE RESPONSIBLE FOR THE SAFETY OF THE STRUCTURES AND PERSONNEL DURING THE WORK UNDER THIS CONTRACT. ALL ALTERING, CUTTING, DRILLING OF PAVEMENT, FLOOR AND OTHER MODIFICATIONS SHALL BE NEATLY AND CAREFULLY DONE BY SKILLED MECHANICS. XRAYS OF SLAB MUST BE TAKEN PRIOR TO MAKING ANY PENETRATIONS TO ENSURE EXISTING REINFORCEMENT WILL NOT BE DISTURBED.

4. THE CONTRACTOR SHALL BE RESPONSIBLE FOR ALL DAMAGE TO EXISTING WORK, MATERIALS AND EQUIPMENT AS A RESULT OF HIS OPERATIONS. ALL DAMAGED WORK SHALL BE REPAIRED OR REPLACED WITH MATERIALS OF LIKE TYPE, QUALITY AND FINISH BY SKILLED MECHANICS OF THE TRADES INVOLVED AT NO ADDITIONAL COST TO THE OWNER AND TO THE FULL SATISFACTION OF THE ARCHITECT / ENGINEER.

5. DISPOSAL OF ALL MATERIAL NOT SPECIFIED OR SHOWN TO BE SALVAGED AND / OR REUSED RESULTING FROM REMOVAL OPERATIONS SHALL BE THE RESPONSIBILITY OF THE CONTRACTOR. ALL COSTS IN CONNECTION WITH DISPOSING OF THE MATERIALS WILL BE AT THE CONTRACTOR'S EXPENSE. ALL LIABILITY OF ANY NATURE RESULTING FROM THE DISPOSAL OF THE MATERIALS WILL BE THE RESPONSIBILITY OF THE CONTRACTOR.

6. CONTRACTOR SHALL PROVIDE AND MAINTAIN ACCESS TO ALL EXISTING FACILITIES AND THOSE UNDER CONSTRUCTION IN THE IMMEDIATE VICINITY, AT ALL TIMES DURING CONSTRUCTION OF PROPOSED PROJECT.

7. CONTRACTOR SHALL INSTALL SECURITY FENCING AND BARRICADES AS REQUIRED BY THE LOCAL AUTHORITIES AND/OR DIRECTED BY THE ARCHITECT / ENGINEER.

8. VERIFICATION OF EXISTING CONDITIONS: EACH CONTRACTOR SHALL DETERMINE AND VERIFY ALL DIMENSIONS AND CONDITIONS AT THE BUILDING SITE AND SHALL BE RESPONSIBLE FOR SAME BEFORE COMMENCING THE WORK. DISCREPANCIES SHALL BE REPORTED TO THE ARCHITECT AND/OR ENGINEER AND SHALL BE RESOLVED BEFORE RESUMING THE WORK. DIMENSIONS SHALL BE READ AND NEVER SCALED OR ESTIMATED FROM THE ARCHITECTURAL DRAWINGS.

9. **CODE COMPLIANCE:**
EACH CONTRACTOR SHALL COMPLY WITH THE REQUIREMENTS OF THE FLORIDA BUILDING CODE, 2014 EDITION; FLORIDA FIRE PREVENTION CODE, 5TH EDITION, AND ADOPTED NFPA STANDARDS AND WITH ALL OTHER CODES AND GOVERNMENTAL AGENCIES HAVING JURISDICTION OVER HIS PORTION OF THE WORK. EACH CONTRACTOR SHALL BE RESPONSIBLE FOR CONSTRUCTION MEANS, METHODS, TECHNIQUES, SEQUENCES AND PROCEDURES AND FOR SAFETY PRECAUTION AND PROGRAMS IN CONNECTION WITH HIS PORTION OF THE WORK.

10. EXAMINATION OF THE CONTRACT DOCUMENTS AND SITE: EACH CONTRACTOR FOR THIS PROJECT SHALL STUDY AND FAMILIARIZE HIMSELF WITH THE SITE AND WITH ALL THE DRAWINGS FOR ALL TRADES AND PARTS OF THE WORK. SHOULD ANY CONTRACTOR HAVE THE OPINION THAT THERE EXISTS IN THE ARCHITECTURAL DRAWINGS ANY ERRORS OR DISCREPANCIES, OR THAT CONDITIONS OF THE WORK OF ANY OTHER CONTRACTOR IS SUCH THAT IT WILL PREVENT HIM FROM COMPLETING HIS WORK IN A COMPETENT MANNER, HE SHALL NOTIFY THE ARCHITECT OF SUCH BEFORE PROCEEDING WITH HIS WORK.

11. THE CONTRACTOR SHALL HAVE AT THE BUILDING SITE, FROM START TO FINISH OF CONSTRUCTION, A RESPONSIBLE FOREMAN. IN ADDITION, THE CONTRACTOR SHALL GIVE HIS PERSONAL SUPERVISION TO THE WORK. THE FOREMAN SHALL BE ON DUTY DURING ALL WORKING HOURS. ANY INSTRUCTIONS OR NOTICES GIVEN TO HIM SHALL HAVE THE SAME IMPORTANCE AS IF GIVEN TO THE CONTRACTOR IN PERSON.

12. THE CONTRACTOR SHALL BE RESPONSIBLE FOR PROVIDING AND MAINTAINING TEMPORARY PROVISIONS SUCH AS TOILETS, WATER SUPPLY, LIGHT AND POWER AS WELL AS ANY OTHER DEEMED NECESSARY FOR THE COMPLETION OF THE PROJECT. COORDINATE WITH OWNER THE USE OF EXISTING FACILITIES DURING THE PROJECT.

13. ANY ITEM OF WORK NECESSARY TO THE PROPER COMPLETION OF CONSTRUCTION WHICH IS NOT SPECIFICALLY COVERED IN THESE DOCUMENTS SHALL BE PERFORMED IN A MANNER DEEMED GOOD PRACTICE OF THE TRADE INVOLVED.

14. PERMITS, FEES AND TAXES:
THE CONTRACTOR SHALL OBTAIN AND PAY FOR ALL PERMITS, FEES LICENSES AND DEPOSITS AND BE LIABLE FOR ALL STATE AND FEDERAL SALES TAXES, AND ALL OBLIGATIONS UNDER THE FEDERAL SECURITY ACT. UPON COMPLETION OF THE PROJECT, THE CONTRACTOR SHALL OBTAIN CERTIFICATES OF COMPLIANCE, APPROVAL OR ACCEPTANCE FROM ALL AUTHORITIES HAVING JURISDICTION OVER THE WORK AND DELIVER THESE CERTIFICATES TO THE OWNER ALONG WITH OFFICIAL RECEIPTS FOR THE SAME.

15. PERFORMANCE OF WORK:
NO SUBCONTRACTOR SHALL BEGIN HIS WORK UNLESS THE PREVIOUS TRADES, UPON WHOM HE IS DEPENDENT, HAS PERFORMED THEIR WORK SATISFACTORILY ACCORDING TO THE PLANS AND SPECIFICATIONS. ONCE THE CONTRACTOR HAS STARTED HIS WORK, HE ASSUMES FULL RESPONSIBILITY FOR THAT WORK, BOTH FOR MATERIALS AND LABOR PERFORMED. ALL SUBCONTRACTORS ARE RESPONSIBLE FOR REMOVING DEBRIS RESULTING FROM THEIR WORK FROM THE PREMISES.

16. CLEANUP:
IN ADDITION TO THE REMOVAL OF ALL CONSTRUCTION DEBRIS FROM THE PREMISES, IT IS THE FINAL RESPONSIBILITY OF THE CONTRACTOR TO REMOVE ALL SMUDGES, SPOTS OF PLASTER, PUTTY, CAULKING COMPOUND, ADHESIVE, PAINT AND PENCIL MARKINGS, TAGS AND DESTINATION LABELS NOT CALLED FOR AS BEING PERMANENT. THE CONTRACTOR SHALL ALSO CLEAN EACH AREA SEPARATELY, INCLUDING THE WASHING OF ALL WINDOWS AND VACUUMING OR WAXING OF ALL FLOORS, PRIOR TO HANDING THE COMPLETED PROJECT OVER TO THE OWNER.

17. MATERIALS:
ALL MATERIALS SHALL BE NEW, AS CALLED FOR IN THE DRAWINGS, AND THE BEST OF THEIR RESPECTIVE KINDS. NO SUBSTITUTIONS SHALL BE MADE BY THE CONTRACTOR WITHOUT PRIOR WRITTEN APPROVAL BY THE OWNER, UNLESS SPECIFIED OTHERWISE ON THE DRAWINGS. FOR PORTIONS OF THE WORK NOT SHOWN IN DETAIL, BUT WHICH ARE SHOWN GENERALLY, OR ARE REASONABLY INFERABLE AS BEING REQUIRED FOR A COMPETENT AND COMPLETE INSTALLATION, THE MATERIAL METHODS AND WORKMANSHIP SHALL CONFORM AS A MINIMUM TO THE TYPICAL OR REPRESENTATIVE.

18. CUTTING AND PATCHING:
EACH CONTRACTOR SHALL BE RESPONSIBLE FOR ANY CUTTING, FITTING, PATCHING AND MATCHING OF HIS NEW WORK TO EXISTING WORK WHERE APPLICABLE AND INDICATED IN THE DRAWINGS. NO CONTRACTOR SHALL ENDANGER ANY WORK OF ANY OTHER CONTRACTOR BY EXCAVATING CUTTING OR OTHERWISE ALTERING ANY WORK OF ANY OTHER CONTRACTORS.

19. PRIOR TO BEGINNING WORK, GC IS TO OBTAIN, BECOME FAMILIAR AND FOLLOW ANY AND ALL CONSTRUCTION GUIDELINES, RULES AND REGULATIONS FROM THE OWNER AND/OR CONDOMINIUM OFFICE, SO LONG AS SUCH GUIDELINES ARE NOT IN CONFLICT WITH THE FLORIDA BUILDING CODE OR LOCAL JURISDICTION. IF GC DETECTS DISCREPANCIES BETWEEN CONDO GUIDELINES AND LOCAL CONSTRUCTION REGULATIONS, GC MUST INFORM ARCHITECT, CONDO OFFICE AND OWNER IN WRITING IN ORDER TO REACH A RESOLUTION PRIOR TO PROCEEDING WORK.

20. DEMOLITION: THE CONTRACTOR SHALL BE RESPONSIBLE FOR THE DEMOLITION AND REMOVAL OF DEBRIS REQUIRED TO COMPLETE THE CONSTRUCTION AS SPECIFIED ON THE DRAWINGS. EXISTING UNUSED ELECTRIC AND PLUMBING SHALL BE REMOVED OR ADEQUATELY CAPPED AS ALLOWED BY CODE.

21. DEMOLITION NOTES ARE A GENERAL OUTLINE OF ITEMS TO BE REMOVED. HOWEVER , ANY ITEMS IN THE WAY OF NEW CONSTRUCTION MUST BE REMOVED AND DISCARDED IN ORDER TO INSTALL NEW PRODUCTS.

LOCATION MAP

NTS

LEGAL DESCRIPTION:

RIVO ALTO AMD PB 774
LOT 4 BLK 8
AND PROP INT IN & TO COMMON
LOT SIZE 60.000 X 125

FOLIO # 0232330010930

ALTERATION-LEVEL 2

AS PER SECTION 404, EXISTING BUILDINGS CODE

404.1 SCOPE. LEVEL 2 ALTERATIONS INCLUDE THE RECONFIGURATION OF SPACE, THE ADDITION OR ELIMINATION OF ANY DOOR OR WINDOW, THE RECONFIGURATION OR EXTENSION OF ANY SYSTEM, OR THE INSTALLATION OF ANY ADDITIONAL EQUIPMENT.

SCOPE OF WORK:

1. REMOVAL OF CEILING FINISHES IN ORDER TO EXPLORE STRUCTURE FOR FUTURE REMODELING.

PUBLIC WORKS
PLAN REVIEW NOTICE

Phone 305-673-7080 Fax 305-673-7028

THIS PLAN REVIEW CONSTITUTES APPROVAL FOR OBTAINING BUILDING PERMITS ONLY.

-All work, materials and equipment are to be retained within private property.

-All construction and /or use of equipment in the Right of Way and/or easements will require a separate Public Works Department permit PRIOR TO START OF CONSTRUCTION.

-Prior to start any excavation in the right of way, you must contact Sunshine State One Call of Florida (1-800-432-4770) no later than 48 hours prior to the excavate; you cannot start the work if the utilities have not been location at the job site.

OFFICE COPY
CITY OF MIAMI BEACH
APPROVED FOR PERMIT BY
THE FOLLOWING:

BUILDING: [signature] 8/16/16 ✓
ZONING: [signature] 8-16-16 ✓
PLUMBING:
ELECTRICAL: 8-16-16 [signature] ✓
MECHANICAL:
FIRE PREVENTION:
FLOOD: [signature] 8/16/16 ✓
PUBLIC WORKS: [signature] 8/16/16 ✓
STRUCTURAL:
ELEVATOR:
ROOFING:

DRAWING LIST

ARCHITECTURAL	
A0.0	DATA
A1.0	EXISTING/PARTIAL DEMO PLAN

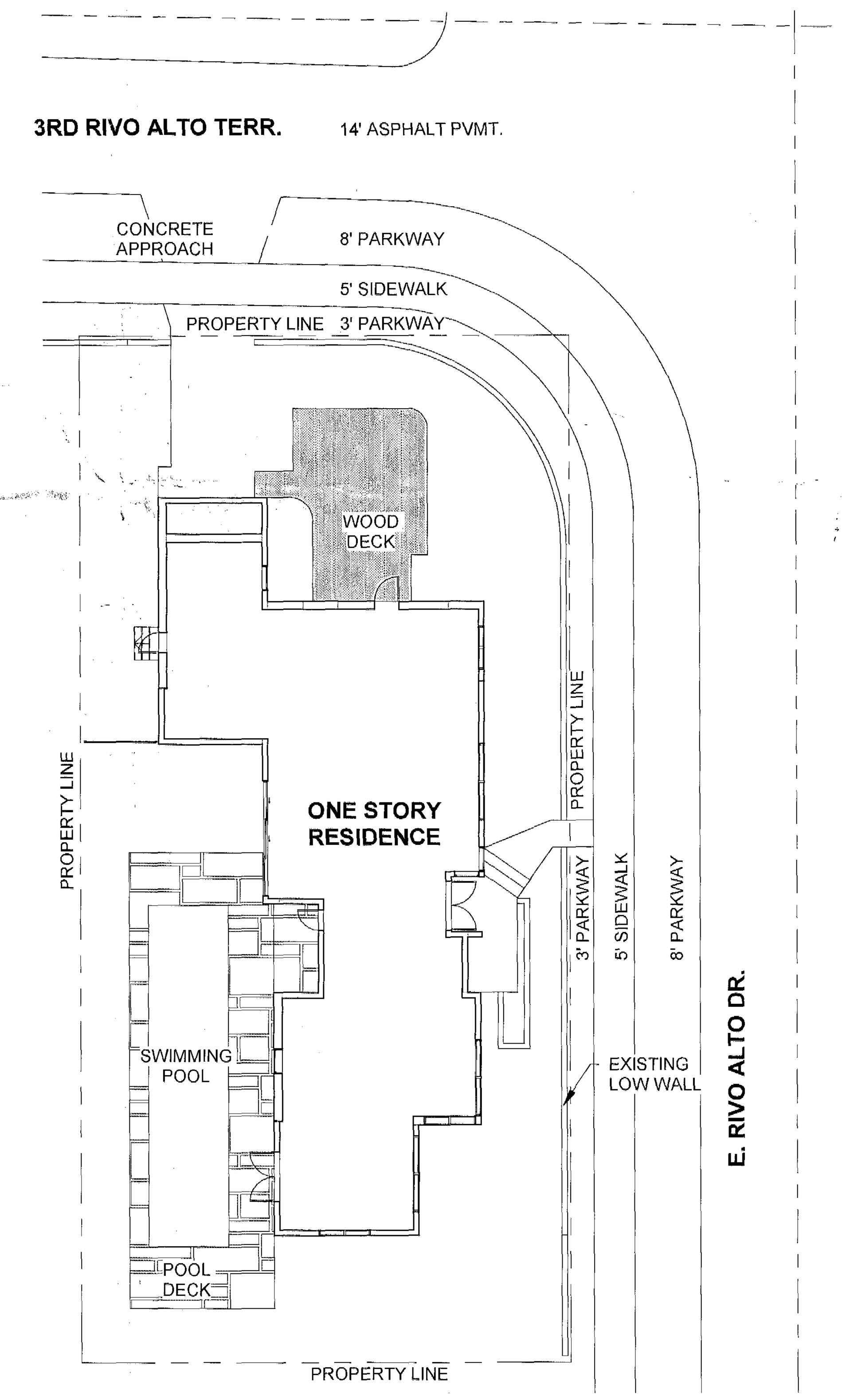

1 EXISTING SITE PLAN
SCALE: 1/16" = 1'-0"

BR0816-0392

ARCHIQUADRA
ARCHITECTURE & INTERIOR DESIGN
ARCHIQUADRA, P.A. | AA26002287
2828 CORAL WAY | SUITE 204
MIAMI, FL 33145
786.430.7765 | ARCHI2.COM

Consultant:

Project:
EXPLORATORY DEMO SET
250 RIVO ALTO DR
MIAMI BEACH

Architect:
JORGE EDUARDO GONZALEZ AIA
AR 94751 / ID 5595 / LEED AP
JUL 27 2016

Revisions

No.	Description	Date

P160211
Project No.

Date: 07/22/16

DATA

A0.0

THESE PLANS ARE AND SHALL REMAIN THE PROPERTY OF ARCHIQUADRA, P.A. AND SHALL NOT BE SOLD OR REPRODUCED WITHOUT PRIOR WRITTEN CONSENT. THESE PLANS ARE NOT VALID WITHOUT APPROPRIATE ARCHITECT'S RAISED SEAL AND SIGNATURE AND ARE FOR BUILDING DEPARTMENT REVIEW ONLY. PLANS ARE NOT TO BE CONSTRUED AS CONSTRUCTION DOCUMENTS UNTIL ALL BUILDING DEPARTMENT APPROVALS ARE OBTAINED. THESE PLANS MAY BE SUBJECT TO MODIFICATION AS REQUIRED BY EXISTING FIELD CONDITIONS WHICH MAY NOT BE REFLECTED IN THESE PLANS. THE ARCHITECT SHALL BE NOTIFIED OF ANY FIELD DISCREPANCIES OR OTHER CONCERNS FOR CLARIFICATION PRIOR TO BEGINNING CONSTRUCTION OR BIDDING.

DEMOLITION NOTES

PART I SUMMARY

1.01 DESCRIPTION

A. FURNISH ALL LABOR, MATERIALS, EQUIPMENT, AND SERVICES TO PERFORM DEMOLITION AND REMOVAL OF DEBRIS FROM DEMOLITION OPERATIONS WHEN INDICATED ON DRAWINGS AND SPECIFIED IN THIS SECTION.

1.02 QUALITY ASSURANCE

A. QUALIFICATIONS :

1.) PROVIDE STAFF RESPONSIBLE FOR DEMOLITION WORK FULLY EXPERIENCED IN THIS TYPE OF WORK.

2.) PROVIDE EQUIPMENT OF SUITABLE TYPE, IN GOOD WORKING CONDITION, AND OPERATED BY SKILLED MECHANICS.

3.) PERFORM WORK IN SAFE AND CAUTIOUS MANNER TO AVOID ACCIDENTS OR PROPERTY DAMAGE.

4.) REMOVAL AND DEMOLITION OF HAZARDOUS MATERIALS SHALL BE PERFORMED BY COMPANY LICENSED AND QUALIFIED TO DO SO. NOTIFY OWNER IMMEDIATELY UPON THE ENCOUNTER OF ANY SUSPECTED HAZARDOUS MATERIAL.

B. REFERENCE STANDARDS : COMPLY WITH ALL CODES AND REGULATIONS REGARDING DEMOLITION WORK.

PART II PRODUCTS

2.01 SALVAGED ITEMS :

A. SALVAGED COMPONENTS WILL BE THE PROPERTY OF THE CONTRACTOR AND SHALL BE REMOVED FROM THE SITE IMMEDIATELY UPON DISCONNECTION FROM BUILDING.

PART III EXECUTION

3.01 PERFORMANCE :

A. PREVENT DAMAGE TO ADJOINING PROPERTY AREAS AND OWNER'S SALVAGED PROPERTY DURING DEMOLITION.

B. MODIFICATIONS TO EXISTING BASE BUILDING STRUCTURAL SYSTEMS ARE NOT PERMITTED WITHOUT WRITTEN APPROVAL BY THE OWNER IN EACH INSTANCE. ONCE WRITTEN APPROVAL IS OBTAINED FROM THE OWNER, SHORE STRUCTURE AS REQUIRED TO PREVENT STRUCTURAL DAMAGE OR COLLAPSE IF THE WORK INCLUDES DEMOLITION OF STRUCTURAL ELEMENTS. REMOVE FINISHES FIRST IN ORDER TO ASSERTING WHICH ITEMS ARE OF A STRUCTURAL NATURE. CONTRACTOR SHALL PROVIDE AN ADEQUATE SHORING PLAN AFTER REMOVAL OF FINISHES. SAID SHORING PLAN SHALL BE PREPARED BY A QUALIFIED PROFESSIONAL STRUCTURAL ENGINEER LICENSED TO PRACTICE IN THE STATE OF FLORIDA.

C. DEMO PLAN IS DIAGRAMMATIC IN NATURE. ALL ITEMS IN THE WAY OF ANY ITEMS WHICH ARE TO BE INSTALLED, ARE TO BE REMOVED. CONTRACTOR TO COORDINATE DEMOLITION WITH PROPOSED WORK AND WITH ARCHITECT FOR ANY QUESTIONABLE ITEMS PRIOR TO BID.

D. ALL WORK SHALL BE DONE IN PROTECTED SPACE. NO DUST OR DIRT SHALL TRAVEL FROM CONSTRUCTION AREA TO ADJACENT AREAS. TEMPORARY DUST PROTECTION SHALL BE ERECTED PRIOR TO START OF WORK

3.02 ADJUST AND CLEAN :

A. REMOVE ALL DEMOLITION MATERIALS, DEBRIS, AND RUBBISH FROM SITE IMMEDIATELY ON COMPLETION OF DEMOLITION WORK.

B. DO NOT ALLOW ANY ACCUMULATION OF DEBRIS ON SITE.

C. TRANSPORT ALL DEMOLITION MATERIALS WITHOUT SPILLAGE ON STREETS.

D. LEAVE SITE NEAT AND ORDERLY ON COMPLETION OF DEMOLITION WORK.

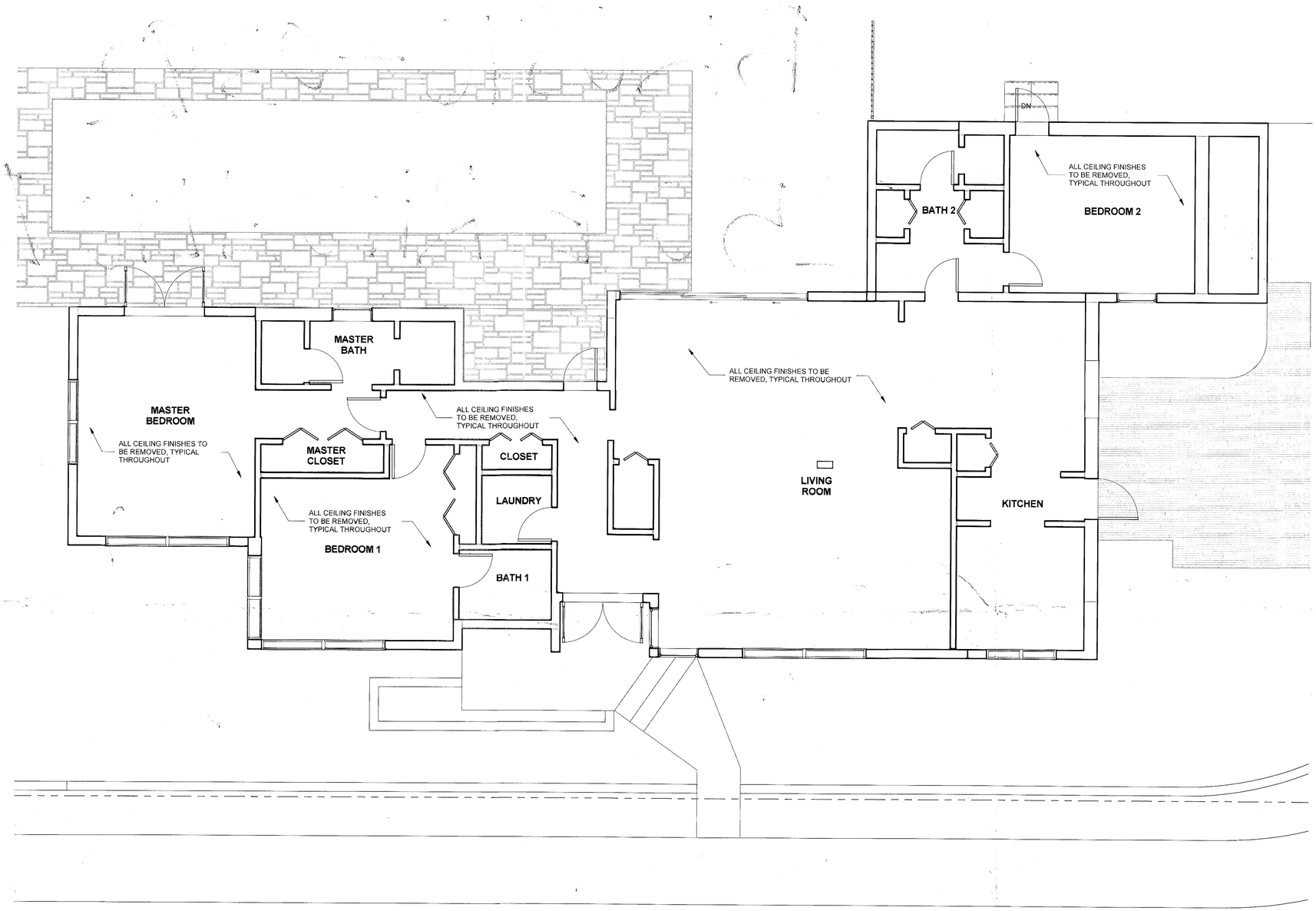

1 EXISTING/EXPLORATORY DEMO PLAN

SCALE: 1/4" = 1'-0"

WALL LEGEND

EXISTING WALL TO REMAIN

ARCHIQUADRA
ARCHITECTURE & INTERIOR DESIGN
ARCHIQUADRA, P. A. | AA26002041
2200 BIRCHWOOD AVENUE
MIAMI, FL 33145
(305) 2-ARCHIQUADRA | 2-ARCHIQUADRA.COM

Consultant:

Project: EXPLORATORY DEMO SET

250 RIVO ALTO DR
MIAMI BEACH

Architect:

JUL 27 2016

Revisions

No.	Description	Date

P160211
Project No.

Date: 07/22/16

EXISTING/PARTIAL DEMO PLAN

A1.0

THESE PLANS ARE AND SHALL REMAIN THE PROPERTY OF ARCHIQUADRA, P.A. AND SHALL NOT BE SOLD OR REPRODUCED WITHOUT PRIOR WRITTEN CONSENT. THESE PLANS ARE NOT VALID WITHOUT APPROPRIATE ARCHITECT'S RAISED SEAL AND SIGNATURE AND ARE FOR BUILDING DEPARTMENT REVIEW ONLY. 24" PLANS ARE NOT TO BE CONSTRUED AS CONSTRUCTION DOCUMENTS UNTIL ALL BUILDING DEPARTMENT APPROVALS ARE OBTAINED. THESE PLANS MAY BE SUBJECT TO MODIFICATION AS REQUIRED BY EXISTING FIELD CONDITIONS WHICH MAY NOT BE REFLECTED IN THESE PLANS. THE ARCHITECT SHALL BE NOTIFIED OF ANY FIELD DISCREPANCIES OR OTHER CONCERNS FOR CLARIFICATION PRIOR TO BEGINNING CONSTRUCTION OR BIDDING.

C:\Users\X2B\Documents\ARCHIQUADRAPROJECTS\P160211 - 250 E RIVO ALTO\DWGS\PARTIAL DEMO SET.rvt
7/22/2016 4:31:10 PM

BR0816-0392

250 E RIVOALTO DR

OFFICE

MIAMIBEACH

Plan Routing Sheet

General Information		
Date 05/07/14	Process/Permit Number ~~Re-Submittals Only~~ DRB 41512	Historic (Y/N)
Job Address 250 E Rivo Alto Dr.		
Contact Name Daniel Perez	E-mail	Telephone 3/772-7954.

Re-submittals - New Sheets: ☐ **Yes** ☐ **No**

List all new sheets:

OFFICE USE ONLY

Required Approvals - As Indicated		
☑ Planning & Zoning	☐ Fire	☐ Public Works
☐ Flood Plain Management	☑ Building Roof	☐ Structural
☐ Electrical	☐ Mechanical	☐ Plumbing
☐ Elevator		

Comments:

Reviewer: Date: 5/7/14

☑ **Walk Thru** ☐ **Drop Off**

BREV141572

High Velocity Hurricane Zone Uniform Permit Application Form

Section C (Low Sloped Roof System)

Fill in Specific Roof Assembly Components and Identify Manufacturer
(If a component is not used, identify as "NA")

System Manufacturer: GAF CORP.

NOA No.: 13-0424.09

Design Wind Pressures, From RAS 128 or Calculations: 51.4 86.2 129.0 AL 5/7/14

Pmax1: ~~42.5~~ Pmax2: ~~71.1~~ Pmax3: ~~106.0~~

Max. Design Pressure, From the Specific NOA System: -52.5

Deck:

Type: PLYWOOD

Gauge/Thickness: 5/8"

Slope: 1/2"

Anchor/Base Sheet & No. of Ply(s): GAF 75# BASE

Anchor/Base Sheet Fastener/Bonding Material: 1 1/4" RS NAILS

Insulation Base Layer: ISO

Base Insulation Size and Thickness: 2"

Base Insulation Fastener/Bonding Material: ASPHALT

Top Insulation Layer: N/A

Top Insulation Size and Thickness: N/A

Top Insulation Fastener/Bonding Material: N/A

Base Sheet(s) & No. of Ply(s): 1 PLY STRATAVENT PERFORATED

Base Sheet Fastener/Bonding Material: LOOSE LAID

Ply Sheet(s) & No. of Ply(s): 2 PLIES OF GAF PLY IN

Ply Sheet Fastener/Bonding Material: ASPHALT TYPE IV

Top Ply: 1 PLY Energy CAP SHEET

Top Ply Fastener/Bonding Material: ASPHALT

Surfacing: GRANULES

Fastener Spacing for Anchor/Base Sheet Attachment

Field: 9 " oc @ Lap, # Rows 2 @ 6" oc

Perimeter: 6" oc @ Lap, # Rows 4 @ 6" oc

Corner: 4 " oc @ Lap, # Rows 4 @ 4" oc

Number of Fasteners Per Insulation Board

Field: ____ Perimeter N/A Corner: ____

Illustrate Components Noted and Details as Applicable:
Woodblocking, Gutter, Edge Termination, Stripping, Flashing, Continuous Cleat, Cant Strip, Base Flashing, Counter- Flashing, Coping, Etc.

Indicate: Mean Roof Height, Parapet Height, Height of Base Flashing, Component Material, Material Thickness, Fastener Type, Fastener Spacing or Submit Manufacturers Details that Comply with RAS 111 and Chapter 16.

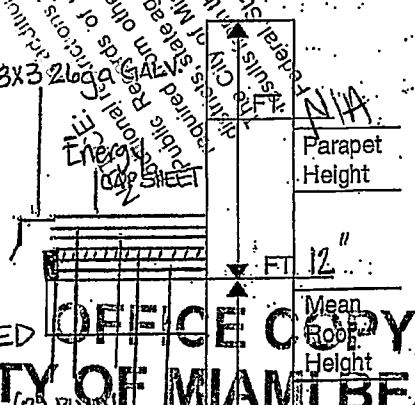

OFFICE COPY
CITY OF MIAMI BEACH
APPROVED FOR PERMIT BY
THE FOLLOWING:

BUILDING: AL 5/7/14
ZONING: 5/7/14
PLUMBING:
ELECTRICAL:
MECHANICAL:
FIRE PREVENTION:
FLOOD:
PUBLIC WORKS:
STRUCTURAL:
ELEVATOR:

BMEV14157Z

MIAMI-DADE COUNTY
PRODUCT CONTROL SECTION
11805 SW 26 Street, Room 208
Miami, Florida 33175-2474
T (786)315-2590 F (786) 315-2599
www.miamidade.gov/economy

DEPARTMENT OF REGULATORY AND ECONOMIC RESOURCES (RER)
BOARD AND CODE ADMINISTRATION DIVISION

NOTICE OF ACCEPTANCE (NOA)

GAF
1361 Alps Road
Wayne, NJ 07470

SCOPE:

This NOA is being issued under the applicable rules and regulations governing the use of construction materials. The documentation submitted has been reviewed and accepted by Miami-Dade County RER -Product Control Section to be used in Miami Dade County and other areas where allowed by the Authority Having Jurisdiction (AHJ).

This NOA shall not be valid after the expiration date stated below. The Miami-Dade County Product Control Section (In Miami Dade County) and/or the AHJ (in areas other than Miami Dade County) reserve the right to have this product or material tested for quality assurance purposes. If this product or material fails to perform in the accepted manner, the manufacturer will incur the expense of such testing and the AHJ may immediately revoke, modify, or suspend the use of such product or material within their jurisdiction. RER reserves the right to revoke this acceptance, if it is determined by Miami-Dade County Product Control Section that this product or material fails to meet the requirements of the applicable building code.

This product is approved as described herein, and has been designed to comply with the Florida Building Code including the High Velocity Hurricane Zone of the Florida Building Code.

DESCRIPTION: GAF Conventional Built-Up Roof System for Wood Decks.

LABELING: Each unit shall bear a permanent label with the manufacturer's name or logo, city, state and following statement: "Miami-Dade County Product Control Approved", unless otherwise noted herein.

RENEWAL of this NOA shall be considered after a renewal application has been filed and there has been no change in the applicable building code negatively affecting the performance of this product.

TERMINATION of this NOA will occur after the expiration date or if there has been a revision or change in the materials, use, and/or manufacture of the product or process. Misuse of this NOA as an endorsement of any product, for sales, advertising or any other purposes shall automatically terminate this NOA. Failure to comply with any section of this NOA shall be cause for termination and removal of NOA.

ADVERTISEMENT: The NOA number preceded by the words Miami-Dade County, Florida, and followed by the expiration date may be displayed in advertising literature. If any portion of the NOA is displayed, then it shall be done in its entirety.

INSPECTION: A copy of this entire NOA shall be provided to the user by the manufacturer or its distributors and shall be available for inspection at the job site at the request of the Building Official.

This NOA revises and renews NOA No. 07-1219.09 consists of pages 1 through 17.
The submitted documentation was reviewed by Juan E. Collao, R.A.

MIAMI-DADE COUNTY APPROVED

Juan E. Collao

NOA No.: 13-0424.09
Expiration Date: 11/04/14
Approval Date: 10/31/13

ROOFING SYSTEM APPROVAL

Category:	Roofing
Sub-Category:	BUR
Material:	Fiberglass
Deck Type:	Wood
Maximum Design Pressure:	-75 psf

TRADE NAMES OF PRODUCTS MANUFACTURED OR LABELED BY APPLICANT:

TABLE 1

Product	Dimensions	Test Specification	Product Description
GAFGLAS® #75 Base Sheet	39.37" (1 meter) Wide	ASTM D 4601	Type II asphalt impregnated and coated glass mat base sheet.
GAFGLAS® #80 Ultima™ Base Sheet	39.37" (1 meter) Wide	ASTM D 4601	Type II asphalt impregnated and coated, fiberglass base sheet.
GAFGLAS® FlexPly™ 6	39.37" (1 meter) Wide	ASTM D 2178	Type VI asphalt impregnated glass felt with asphalt coating.
GAFGLAS® Ply 4	39.37" (1 meter) Wide	ASTM D 2178	Type IV asphalt impregnated glass felt with asphalt coating.
GAFGLAS® Mineral Surfaced Cap Sheet	39.37" (1 meter) Wide	ASTM D 3909	Asphalt coated, glass fiber mat cap sheet surfaced with mineral granules.
GAFGLAS® EnergyCap™ BUR Mineral Surface Cap Sheet	39.37" (1 meter) wide	ASTM D3909	Asphalt coated, glass fiber mat cap sheet surfaced with mineral granules with factory applied EnergyCote™
GAFGLAS® Stratavent® Eliminator™ Perforated Venting Base Sheet	39.37" (1 meter) Wide	ASTM D 4897	Fiberglass base sheet coated on both sides with asphalt. Surfaced on the bottom side with mineral granules embedded in asphaltic coating with factory perforations.
GAFGLAS® Stratavent® Eliminator™ Nailable Venting Base Sheet	39.37" (1 meter) Wide	ASTM D 4897	A nailable, fiberglass base sheet impregnated and coated on both sides with asphalt. Surfaced on the bottom side with mineral granules embedded in asphaltic coating.
Ruberoid® SBS Heat-Weld™ Smooth	39.37" (1 meter) Wide	ASTM D 6164	Non-Woven Polyester mat coated with polymer-modified asphalt and smooth surfaced.
Ruberoid® SBS Heat-Weld™ 25	39.37" (1 meter) Wide	ASTM D 6164	Non-Woven Polyester mat coated with polymer-modified asphalt and smooth surfaced.
Ruberoid® 20	39.37" (1 meter) Wide	ASTM D 6163	SBS modified asphalt base sheet reinforce with a glass fiber mat.

TRADE NAMES OF PRODUCTS MANUFACTURED OR LABELED BY APPLICANT:

TABLE 1

Product	Dimensions	Test Specification	Product Description
Ruberoid® Mop Smooth	39.37" (1 meter) wide	ASTM D 6164	Non-woven polyester mat coated with polymer-modified asphalt and smooth surfaced.
FireOut™ Fire Barrier Coating	5, 55 gallons	Proprietary	Low VOC, water based fire barrier coating.
VersaShield® Fire Resistant Roof Deck Protection	350 sq ft. roll	ASTM D 226	Non-Asphaltic Fiberglass-Based Underlayment.
Topcoat® Surface Seal SB	5 gallons	ASTM D 6083	Solvent based sprayable thermoplastic rubber sealant designed to protect and restore aged roof surfaces and to increase a roof's reflectivity.

APPROVED INSULATIONS:

TABLE 2

Product Name	Product Description	Manufacturer (With Current NOA)
EnergyGuard™ Polyiso Insulation	Polyisocyanurate foam insulation	GAF
EnergyGuard™ RA Polyiso Insulation	Polyisocyanurate foam insulation	GAF
EnergyGuard™ RN Polyiso Insulation	Polyisocyanurate foam insulation	GAF
EnergyGuard™ Perlite Roof Insulation	Perlite insulation board.	GAF
EnergyGuard™ Perlite Recover Board	Perlite recover board	GAF
EnergyGuard™ RA Composite Polyiso Insulation	Polyisocyanurate foam insulation with high density fiberboard or Permalite perlite insulation	GAF
Securock® Gypsum-Fiber Roof Board	Gypsum roof board	USG Corporation
Structodek® High Density Fiber Board	High density fiber board	Blue Ridge FiberBoard, Inc.

APPROVED FASTENERS:

TABLE 3

Fastener Number	Product Name	Product Description	Dimensions	Manufacturer (With Current NOA)
1.	Drill-Tec™ #12 Fastener	Insulation fastener for steel, wood & concrete decks.	various	GAF
2.	Drill-Tec™ #14 Fastener	Insulation fastener for steel, wood & concrete decks.	various	GAF
3.	Drill-Tec™ XHD Fastener	Carbon steel extra heavy duty fastener used in steel decks.	Various	GAF
4.	Drill-Tec™ ASAP 3S	Drill-Tec™ #12 Fastener with Drill-Tec™ 3" Standard Steel Plate	Various	GAF
5.	Drill-Tec™ 3" Steel Plate	Round galvalume stress plate used with Drill-Tec™ fasteners.	3" round	GAF
6.	Drill-Tec™ 3" Standard Steel Plate	Round galvalume plated steel stress plate with reinforced ribs for use with Drill-Tec™ fasteners.	3" round	GAF
7.	Drill-Tec™ AccuTrac® Flat Plate	AZ-SS aluminized steel plate for use with Drill-Tec™ #12 Fastener, Drill-Tec™ #14 Fastener and Drill-Tec™ #15 Fastener.	3" square	GAF
8.	Drill-Tec™ AccuTrac® Recessed Plate	Galvalume Steel plate for use with Drill-Tec™ fasteners.	3" square	GAF

EVIDENCE SUBMITTED:

Test Agency	Test Identifier	Description	Date
Factory Mutual Research Corp.	J.I. 2B8A4.AM	4470	07/02/97
	J.I. 3B9Q1.AM	4470	01/08/98
	J.I. 0D0A8.AM	4470	07/09/99
	J.I. 0D1A8.AM	4470 - TAS 114	07/29/94
	J.I. 0Y9Q5.AM	4470 - TAS 114	04/01/98
	3029832	4470 - TAS 114	05/11/07
PRI Asphalt Technologies, Inc.	GAF-084-02-01	ASTM D 6083	05/09/06
	GAF-314-02-01	ASTM D 2178	08/23/11
	GAF-315-02-01	ASTM D 2178	08/23/11
	GAF-276-02-01Rev	ASTM D 6083	12/16/10
	GAF-276-02-02	ASTM D 226	11/15/10
	GAF-270-02-02	ASTM D 226	11/15/10
IRT of S. Fl.	02-005	TAS 114	01/18/02
	02-014	TAS 114	03/22/02
Trinity | ERD	G6850.08.07-1	ASTM D 3909	08/13/07
	G34140.04.11-4	ASTM D 6401	04/25/11
	G30250.02.10-3-R1	ASTM D 3909	11/26/12
	G34140.04.11-5	ASTM D 4897	04/25/11
	G34140.04.11-5-R1	ASTM D 4897	10/18/13
	G34140.04.11-2	ASTM D 6163	04/25/11

APPROVED ASSEMBLIES

Deck Type 1I: Wood, Insulated

Deck Description: $^{19}/_{32}$" or greater plywood or wood plank

System Type A: Anchor sheet mechanically fastened, all layers of insulation adhered with approved asphalt.

All General and System Limitations shall apply.

One or more layers of any of the following insulations.

Insulation Layer	Insulation Fasteners (Table 3)	Fastener Density/ft^2
EnergyGuard™ Polyiso Insulation, EnergyGuard™ RA Polyiso Insulation, EnergyGuard™ RA Composite Polyiso Insulation		
Minimum 1" thick	N/A	N/A
EnergyGuard™ Perlite Recover Board		
Minimum ½" thick	N/A	N/A
EnergyGuard™ Perlite Roof Insulation		
Minimum ¾" thick	N/A	N/A

Note: All insulation shall be adhered to the anchor sheet in full mopping of approved hot asphalt within the EVT range and at a rate of 20-40 lbs/100 ft^2. Please refer to Roofing Application Standard RAS 117 for insulation attachment. Composite insulation panels may be used as a top layer placed with the polyisocyanurate side facing down. GAF requires either a ply of GAFGLAS® Stratavent® Eliminator™ Perforated Venting Base Sheet laid dry or a layer of EnergyGuard™ Perlite Roof Insulation or wood fiber overlay board on all isocyanurate applications.

Fire Barrier: (optional) FireOut™ Fire Barrier Coating, VersaShield® Fire-Resistant Roof Deck Protection or Securock® Gypsum Fiber Roof Board.

Anchor sheet: GAFGLAS® #80 Ultima™ Base Sheet, GAFGLAS® Stratavent® Eliminator™ Nailable Venting Base Sheet, Ruberoid® 20, Ruberoid® SBS Heat-Weld™ Smooth or Ruberoid® Heat-Weld™ 25 base sheet mechanically fastened as described below;

Fastening Options: GAFGLAS® Ply 4, GAFGLAS® Flex Ply™ 6, GAFGLAS® #75 Base Sheet or any of above anchor sheets attached to deck with approved annular ring shank nails and tin caps at a fastener spacing of 9" o.c. at the lap staggered and in two rows 12" o.c. in the field.
(Maximum Design Pressure –45 psf, See General Limitation #7)

GAFGLAS® Ply 4, GAFGLAS® FlexPly™ 6, GAFGLAS® #75 Base Sheet or any of above anchor sheets attached to deck with Drill-Tec™ #12 Fastener, Drill-Tec™ #14 Fastener and Drill-Tec™ 3" Steel Plate, Drill-Tec™ AccuTrac® Flat Plate or Drill-Tec™ AccuTrac® Recessed Plate 12" o.c. in 3 rows. One row is in the 2" side lap. The other rows are equally spaced approximately 12" o.c. in the field of the sheet.
(Maximum Design Pressure –45 psf, See General Limitation #7)

GAFGLAS® FlexPly™ 6, GAFGLAS® #75 Base Sheet or any of above anchor sheets attached to deck with approved annular ring shank nails and tin caps at a fastener spacing of 9" o.c. at the 4" lap staggered and in two rows 9" o.c. in the field.
(Maximum Design Pressure –52.5 psf, See General Limitation #7)

GAFGLAS® #80 Ultima™ Base Sheet, Ruberoid® 20, Ruberoid® Mop Smooth, base sheet attached to deck with approved 1¼" annular ring shank nails and inverted 3" steel plate at a fastener spacing of 9" o.c. at the 4" lap and in two rows staggered with a fastener spacing of 9" o.c. in the center of the membrane.
(Maximum Design Pressure –60 psf, See General Limitation #7)

GAFGLAS® #75 Base Sheet or any of above anchor sheets attached to deck with Drill-Tec™ #12 Fastener, Drill-Tec™ #14 Fastener and Drill-Tec™ 3" Steel Plate, Drill-Tec™ AccuTrac® Flat Plate or Drill-Tec™ AccuTrac® Recessed Plate 12" o.c. in 4 rows. One row is in the 2" side lap. The other rows are equally spaced approximately 9" o.c. in the field of the sheet.
(Maximum Design Pressure –60 psf, See General Limitation #7)

Any of above anchor sheets attached to deck approved annular ring shank nails and 3" inverted Drill-Tec™ insulation plates at a fastener spacing of 9" o.c. at the 4" lap staggered in two rows 9" in the field.
(Maximum Design Pressure –60 psf, See General Limitation #7)

GAFGLAS® #75 Base Sheet or any of above anchor sheets attached to deck with Drill-Tec™ #12 Fastener or Drill-Tec™ #14 Fastener and 3" Drill-Tec™ 3" Steel Plate, Drill-Tec™ AccuTrac® Flat Plate or Drill-Tec™ AccuTrac® Recessed Plate 8" o.c. in 4 rows. One row is in the 2" side lap. The other rows are equally spaced approximately 9" o.c. in the field of the sheet.
(Maximum Design Pressure –75 psf, See General Limitation #7)

Base Sheet: Optional) Install ~~one ply of GAFGLAS® #75 Base Sheet,~~ GAFGLAS® #80 Ultima™ Base Sheet, GAFGLAS® Stratavent® Eliminator™ Perforated Venting Base Sheet, Ruberoid® Mop Smooth, Ruberoid® 20, Ruberoid® SBS Heat-Weld™ Smooth or Ruberoid® SBS Heat-Weld™ 25 directly over the top layer of insulation. Adhere with any approved mopping asphalt applied within the EVT range and at a rate of 20-40 lbs./sq; (see General Limitation #4).

Ply Sheet: One or more plies GAFGLAS® PLY 4, GAFGLAS® Flex Ply™ 6 sheet or GAFGLAS® #80 Ultima Base Sheet adhered in a full mopping of approved asphalt applied within the EVT range and at a rate of 20-40 lbs./sq.

Cap Sheet: (Optional) One ply of GAFGLAS® Mineral Surfaced Cap Sheet or GAFGLAS® EnergyCap™ BUR Mineral Surfaced Cap Sheet adhered in a full mopping of approved asphalt applied within the EVT range and at a rate of 20-40 lbs./sq.

Surfacing: **Optional on granular surfaced membranes; required for smooth membranes. Chosen components must be applied according to manufacturer's application instructions.**

1. Gravel or slag applied at 400 lbs./sq. and 300 lbs./sq. respectively in a flood coat of approved asphalt at 60 lbs./sq.
2. Topcoat® Surface Seal SB applied at 1to 1.5 gal./sq.

Maximum Design Pressure: See Fastening above.

AR

WOOD DECK SYSTEM LIMITATIONS:

1 A slip sheet is required with GAFGLAS® Ply 4 and GAFGLAS® Flex Ply™ 6 when used as a mechanically fastened base or anchor sheet.
2. Minimum ¼" Dens Deck™ Roof Board or ½" Type X gypsum board is acceptable to be installed directly over the wood deck.

GENERAL LIMITATIONS:

1. Fire classification is not part of this acceptance; refer to a current Approved Roofing Materials Directory for fire ratings of this product.
2. Insulation may be installed in multiple layers. The first layer shall be attached in compliance with Product Control Approval guidelines. All other layers shall be adhered in a full mopping of approved asphalt applied within the EVT range and at a rate of 20-40 lbs./sq., or mechanically attached using the fastening pattern of the top layer
3. All standard panel sizes are acceptable for mechanical attachment. When applied in approved asphalt, panel size shall be 4' x 4' maximum.
4. An overlay and/or recovery board insulation panel is required on all applications over closed cell foam insulations when the base sheet is fully mopped. If no recovery board is used the base sheet shall be applied using spot mopping with approved asphalt, 12" diameter circles, 24" o.c.; or strip mopped 8" ribbons in three rows, one at each sidelap and one down the center of the sheet allowing a continuous area of ventilation. Encircling of the strips is not acceptable. A 6" break shall be placed every 12' in each ribbon to allow cross ventilation. Asphalt application of either system shall be at a minimum rate of 12 lbs./sq. **Note: Spot attached systems shall be limited to a maximum design pressure of -45 psf.**
5. Fastener spacing for insulation attachment is based on a Minimum Characteristic Force (F') value of 275 lbf., as tested in compliance with Testing Application Standard TAS 105. If the fastener value, as field-tested, are below 275 lbf. insulation attachment shall not be acceptable.
6. Fastener spacing for mechanical attachment of anchor/base sheet or membrane attachment is based on a minimum fastener resistance value in conjunction with the maximum design value listed within a specific system. Should the fastener resistance be less than that required, as determined by the Building Official, a revised fastener spacing, prepared, signed and sealed by a Florida Registered Professional Engineer, Registered Architect, or Registered Roof Consultant may be submitted. Said revised fastener spacing shall utilize the withdrawal resistance value taken from Testing Application Standards TAS 105 and calculations in compliance with Roofing Application Standard RAS 117.
7. Perimeter and corner areas shall comply with the enhanced uplift pressure requirements of these areas. Fastener densities shall be increased for both insulation and base sheet as calculated in compliance with Roofing Application Standard RAS 117. Calculations prepared, signed and sealed by a Florida registered Professional Engineer, Registered Architect, or Registered Roof Consultant **(When this limitation is specifically referred within this NOA, General Limitation #9 will not be applicable.)**
8. All attachment and sizing of perimeter nailers, metal profile, and/or flashing termination designs shall conform to Roofing Application Standard RAS 111 and applicable wind load requirements.
9. The maximum designed pressure limitation listed shall be applicable to all roof pressure zones (i.e. field, perimeters, and corners). Neither rational analysis, nor extrapolation shall be permitted for enhanced fastening at enhanced pressure zones (i.e. perimeters, extended corners and corners). **(When this limitation is specifically referred within this NOA, General Limitation #7 will not be applicable.)**
10. All products listed herein shall have a quality assurance audit in accordance with the Florida Building Code and Rule 9N-3 of the Florida Administrative Code.

END OF THIS ACCEPTANCE

ONLINE CERTIFICATIONS DIRECTORY

TGFU.R1306
Roofing Systems

Page Bottom

Roofing Systems

See General Information for Roofing Systems

GAF MATERIALS CORP.
1361 ALPS RD
WAYNE, NJ 07470 USA

R1306

"Ruberoid® 20" or "Ruberoid® 20 HT" or "Ruberoid® Modified Base Sheet" may be utilized as an alternate to Type G2 base sheets in any of the following Classifications.

½-in. thick (minimum) gypsum board or ¼-in. thick (minimum) Georgia-Pacific Gypsum LLC "DensDeck® Roofboard," "DensDeck Prime® Roofboard" or "DensDeck DuraGuard™ Roofboard" may be used in any existing noncombustible deck Classification. When this is done, the resulting roofing system is acceptable for use over combustible (15/32-in. thick minimum) roof decks. However, the butt joints in the gypsum board and Georgia-Pacific Gypsum LLC "DensDeck® Roofboard," "DensDeck Prime® Roofboard" or "DensDeck DuraGuard™ Roofboard" are to offset a minimum of 6-in. with the butt joints in the roof deck. If polystyrene is part of the roof system, it must be placed below the overlayment board.

Multiple plies of "GAFGLAS® Ply 4" or "Tri-Ply® Ply 4" or "Tri-Ply® Ply 6" may be adhered to Georgia-Pacific Gypsum LLC "DensDeck ® Roofboard," "DensDeck Prime® Roofboard" or "DensDeck DuraGuard™ Roofboard" in hot roofing asphalt.

"EnergyGuard® Ultra" is an acceptable alternate to "EnergyGuard® RF" in any applicable Classification.

"GAF Stratavent® Eliminator™ Venting Base Sheet (Nailable)" may be mechanically attached or hot mopped over noncombustible decks and as a recover over existing roof systems.

"GAFGLAS® Perlite Insulation" may be utilized as a cover board over "EnergyGuard® RF" insulation in any of the following systems.

Unless otherwise indicated, the roof insulation is mechanically fastened, adhered with hot mopping asphalt or urethane insulation adhesive. Polystyrene referenced in any of the following Classfications include "EnergyGuard® EPS Insulation".

References to glass fiber insulation include "EnergyGuard Fiberglass Insulation".

ASPHALT FELT SYSTEMS WITH HOT ROOFING ASPHALT

Type G2 asphalt glass mat base sheet ("GAFGLAS® #75 Base Sheet" or "Tri-Ply® #75 Base Sheet", or "GAFGLAS® #80 ULTIMA") is a suitable alternate for Type G1 asphalt glass fiber ply sheet ("GAFGLAS® Ply 4" or "Tri-Ply® Ply 4", or "GAFGLAS® Ply 6") in the Class A, B or C roof systems indicated below.

The roof deck may first be covered with one ply Type G2 asphalt saturated glass mat base sheet "GAF Stratavent® Eliminator™ Venting Base Sheet (Perforated)" or "GAF Stratavent® Eliminator™ Venting Base Sheet (Nailable)." Perforated base sheets to be loose laid or fully adhered with hot roofing asphalt and nailable base sheets are to be mechanically attached granule side down.

As an option Type G2 asphalt glass mat base sheet ("GAFGLAS® #75 Base Sheet" or "Tri-Ply® #75 Base Sheet" or "GAFGLAS® #80 ULTIMA" or "GAF Stratavent® Eliminator™ Venting Base Sheet (Nailable)" may be substituted for Type G1 asphalt glass fiber ply sheet ("GAFGLAS® Ply 4" or "Tri-Ply® Ply 4" or "GAFGLAS® Ply 6") as the nailed base ply in the following systems.

Bottom ply or base sheet may be solid mopped, spot mopped or mechanically fastened.

Unless otherwise indicated, all insulations may be hot mopped or mechanically fastened.

"GAFGLAS® Flashing" or "Ruberoid®" may be used for flashing in any of the Class A, B or C systems listed below.

When "perlite" is referenced, this includes "GAFTEMP PERMALITE®" or any other UL Classified perlite insulation.

Crushed stone or slag are suitable alternates for gravel in any of the Class A, B or C systems listed.

Structural cement fiber building units are considered suitable to be included as a deck in the following Class A, B or C systems listed over C-15/32 or NC.

The use of gypsum board under any of the following Class A, B or C systems does not adversely affect the rating. The use of ½-in. minimum thick gypsum board is an acceptable alternate for minimum insulation over C-15/32 thick roof decks.

The use of polystyrene insulation board between minimum ¾-in. thick perlite board and deck with rosin paper (perlite/rosin paper/polystyrene/perlite) is a suitable alternate for polyisocyanurate board in the following Class A, B or C systems.

"EnergyGuard® RA" or "Tapered EnergyGuard® RA" or "EnergyGuard® Composite RA" may be substituted for any Atlas Roofing Corp. polyisocyanurate insulation in any of the following Classifications.

Trumbull "Perma Mop" may be utilized with any of the following "Asphalt Felt Systems with Hot Roofing Asphalt".

"GAFGLAS® #80 Premium Base Sheet" may be used in any of the following systems.

"GAFGLAS® Flex Ply 6" and "Tri-Ply® Ultra-Flexible Ply 6" are suitable alternates to "GAFGLAS® Ply 6".

"GAFTEMP Permalite Recover Board" may be used in lieu of any perlite insulation in any of the following NC Classifications.

Unless otherwise indicated, any of the "Asphalt Felt Systems with Hot Roofing Asphalt" may be surfaced with "Freshield MB" at 2½ to 3-gal/100-ft^2.

"Ruberoid® Dual Smooth" may be used as an alternate to "Ruberoid® Mop Smooth" or "Ruberoid® 20" or "Ruberoid® 20 HT".

"Ruberoid® Mop Smooth 1.5" may be used as an alternate to "Ruberoid® Mop Smooth"

Class A, B and C

Hot roofing asphalt, for use with organic and glass felts or modified bitumen membranes.

"Ruberoid® Heat Weld" SBS roofing membrane may be used in lieu of "Ruberoid® Mop" SBS products in any applicable Classification.

Class A

1. **Deck:** C-15/32 **Incline:** 3

Insulation (Optional): — One or more layers perlite or wood fiber or glass fiber or polyisocyanurate or urethane or *perlite/polyisocyanurate composite or perlite/urethane composite or wood fiber/polyisocyanurate composite or phenolic, any thickness.*
Ply Sheet: — Three or more plies Type G1 or "GAFGLAS® Ply 4" or "Tri-Ply® Ply 4" or "GAFGLAS® Ply 6" hot mopped.
Surfacing: — Gravel.

2. **Deck:** C-15/32 **Incline:** 2

Insulation (Optional): — One or more layers perlite or wood fiber or glass fiber or polyisocyanurate or urethane or perlite/polyisocyanurate composite or perlite/urethane composite or wood fiber/polyisocyanurate composite or phenolic, any thickness.
Ply Sheet: — Three or more plies Type G1 or "GAFGLAS® Ply 4" or "Tri-Ply® Ply 4" or "GAFGLAS® Ply 6".
Cap Sheet: — One ply Type G3 "GAFGLAS® Mineral Surfaced Cap Sheet" or "Tri-Ply® Mineral Surfaced Cap Sheet" or "GAFGLAS® EnergyCap™ BUR Mineral Surfaced Cap Sheet."

3. **Deck:** NC **Incline:** 2

Insulation (Optional): — One or more layers perlite, wood fiber, glass fiber, polyisocyanurate, urethane, perlite/polyisocyanurate composite, perlite/urethane composite, wood fiber/polyisocyanurate composite, phenolic, 2-in. maximum.
Ply Sheet: — Two or more plies Type G1 "GAFGLAS® Ply 4", "Tri-Ply® Ply 4" or "GAFGLAS® Ply 6".
Cap Sheet: — One ply Type G3 "GAFGLAS® Mineral Surfaced Cap Sheet" or "Tri-Ply® Mineral Surfaced Cap Sheet" or "GAFGLAS® EnergyCap™ BUR Mineral Surfaced Cap Sheet."

4. **Deck:** C-15/32 **Incline:** 1

Slip Sheet (Optional): — Red rosin paper, nailed to deck.
Insulation (optional): — Any thickness perlite or wood fiber or glass fiber or polyisocyanurate mechanically fastened or adhered with OMG Inc. "OlyBond Fastening System" or any UL Classified insulation adhesive.
Base Sheet: — One ply Type G2 "GAFGLAS® #75 Base Sheet" or "Tri-Ply® #75 Base Sheet" (may be nailed).
Ply Sheet: — One or more plies Type G1 "GAFGLAS® Ply 4" or "Tri-Ply® Ply 4" or GAFGLAS® Ply 6".
Cap Sheet: — One ply Type G3 "GAFGLAS® Mineral Surfaced Cap Sheet" or "Tri-Ply® Mineral Surfaced Cap Sheet" or "GAFGLAS® EnergyCap™ BUR Mineral Surfaced Cap Sheet."
Surfacing (optional): — "TOPCOAT® EnergyCote™" applied at a rate of 2-gal/100-ft^2.

5. **Deck:** NC **Incline:** 3

B1403002

BREV141572

250 E Rivo Alto

Dr.

Office Copy