(1) MAXIMUM VELOCITY THRU MAIN DRAIN GRATE DOES NOT EXCEED 1.5 F.P.S.
(2) ALL SURFACES OF SPA SHALL HAVE AN IMPERVIOUS NON-SLIP SURFACE FINISH.

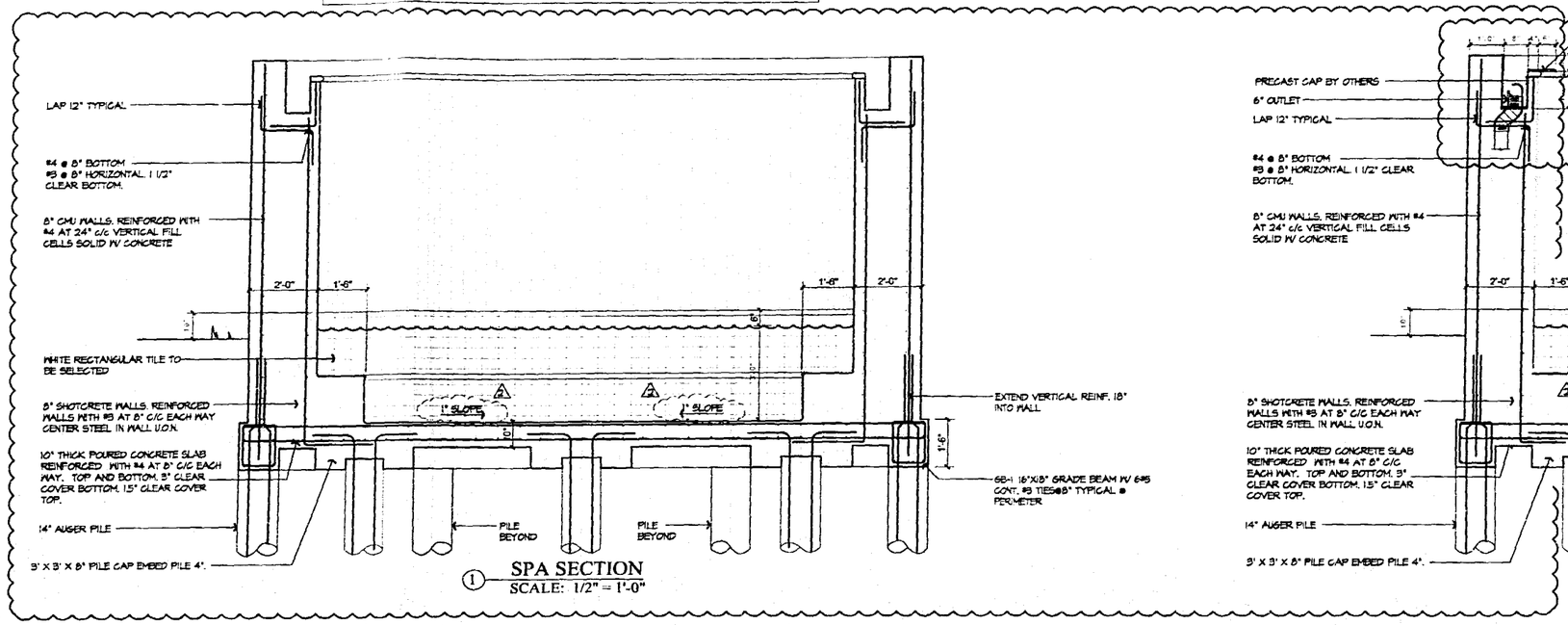

1 SPA SECTION
SCALE: 1/2" = 1'-0"

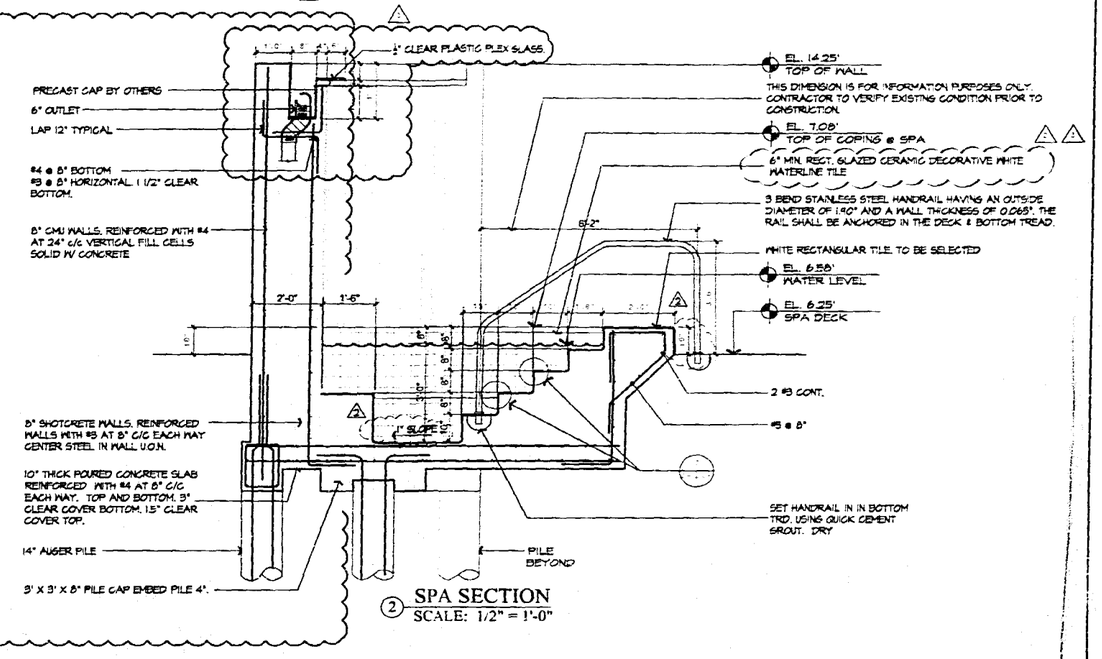

2 SPA SECTION
SCALE: 1/2" = 1'-0"

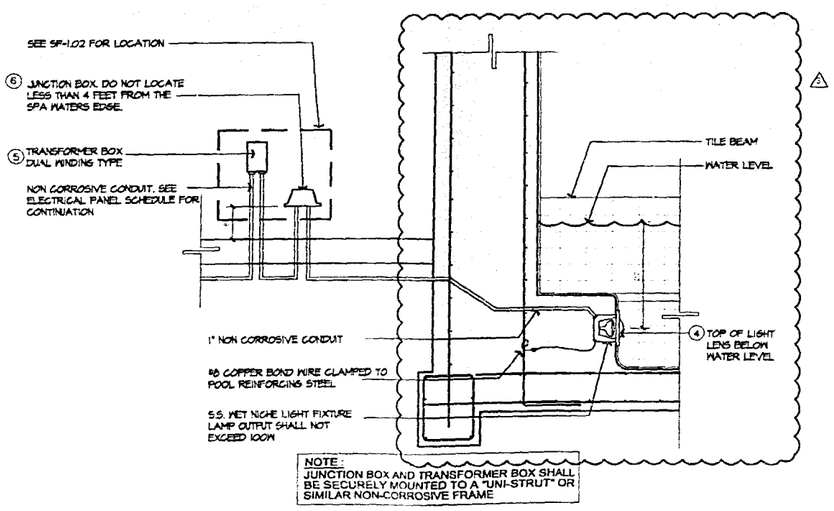

NOTE:
JUNCTION BOX AND TRANSFORMER BOX SHALL BE SECURELY MOUNTED TO A "UNI-STRUT" OR SIMILAR NON-CORROSIVE FRAME

3 UNDERWATER LIGHT DETAIL
SCALE: 3/4" = 1'-0"

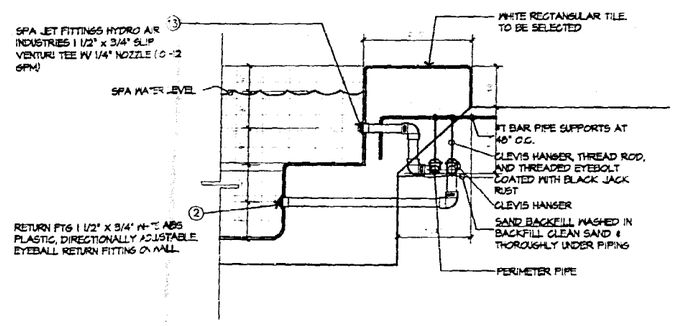

ALL EXPOSED METAL TO BE TREATED AGAINST RUST PRIOR TO BACKFILL

4 PIPING SUPPORT DETAIL
SCALE: 3/4" = 1'-0"

UPDATED DRAWINGS

A Q U A D Y N A M I C S D E S I G N G R O U P, I N C.

AQUADYNAMICS DESIGN GROUP, INC.
AQUATIC ENGINEERING CONSULTANTS
4910 S.W. 72ND AVENUE MIAMI, FLORIDA 33155
PHONE (305) 667-8975 FAX (305) 662-1002
e-mail: info@aquadynamics.net web site: www.aquadynamics.net

NOTICE TO BUILDER
TO THE BEST OF OUR KNOWLEDGE AND BELIEF, THE INFORMATION CONTAINED ON THESE DRAWINGS CONFORMS TO THE STANDARDS SET IN THE FLORIDA BUILDING CODE. THE CONTRACTOR SHALL BE RESPONSIBLE FOR VERIFYING ALL DIMENSIONS AND FIELD CONDITIONS PRIOR TO THE START OF THE WORK AND NOTIFYING THE ENGINEER, AT ONCE, OF ANY AND ALL ERRORS, DISCREPANCIES, OMISSIONS, OR QUESTIONS PERTAINING TO THE SUCCESSFUL COMPLETION OF THE PROJECT INDICATED.

SHEET TITLE
CASCADE SPA
SECTIONS
SCALE AS SHOWN

PROJECT NAME
THE LIDO HOTEL SPA
DECK LEVEL BEACH POOL, SPA & PLUNGE POOL
40 ISLAND AVENUE
MIAMI BEACH, FLORIDA

JOB No.	
DATE	08-06-2008
DRAWN BY	AQUADYNAMICS
SCALE	AS SHOWN
SHEET	SHEET 11 OF 15

No.	REVISIONS
1	
2	
3	
4	

SEAL
JESUS VAZQUEZ P.E.
PROFESSIONAL REG. No. 55334
CIVIL ENGINEER

DRAWING NUMBER
SP-1.02

(1) MAXIMUM VELOCITY THRU MAIN DRAIN GRATE DOES NOT EXCEED 1.5 F.P.S.
(2) ALL SURFACES OF SPA SHALL HAVE AN IMPERVIOUS NON-SLIP SURFACE FINISH

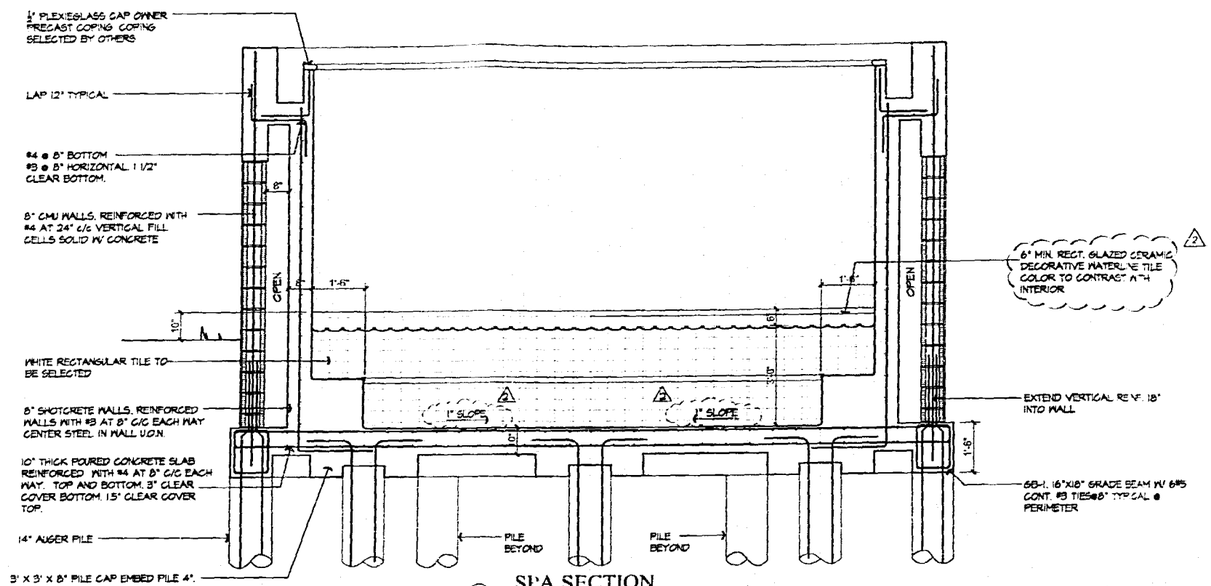

1 SPA SECTION
SCALE: 1/2" = 1'-0"

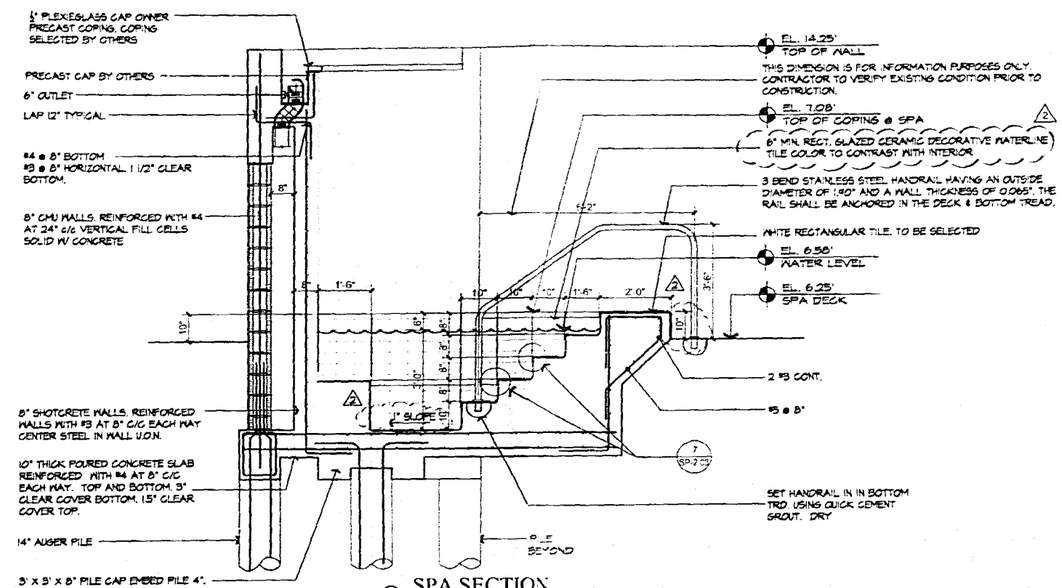

2 SPA SECTION
SCALE: 1/2" = 1'-0"

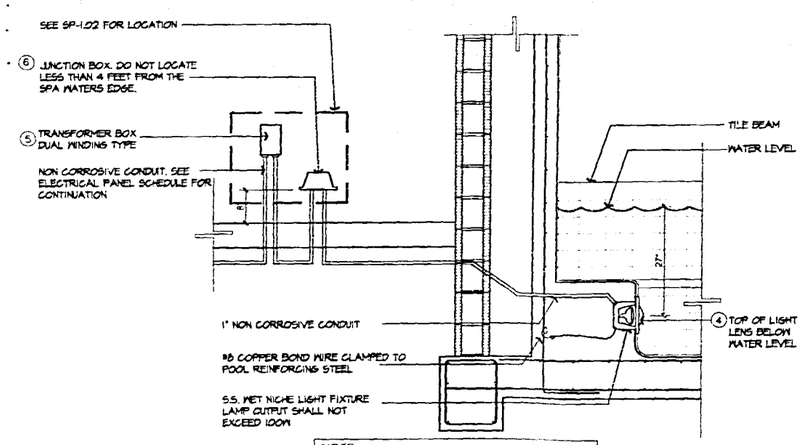

NOTE:
JUNCTION BOX AND TRANSFORMER BOX SHALL BE SECURELY MOUNTED TO A "UNI STRUT" OR SIMILAR NON-CORROSIVE FRAME

3 UNDERWATER LIGHT DETAIL
SCALE: 3/4" = 1'-0"

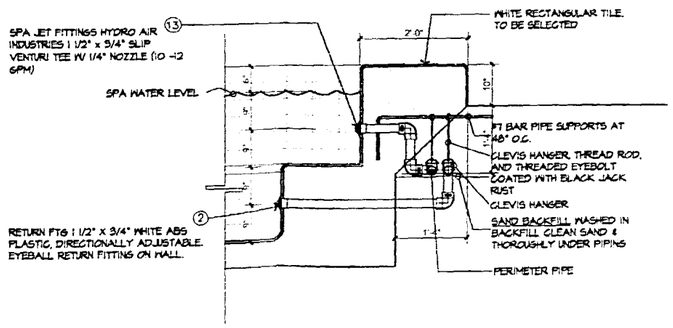

ALL EXPOSED METAL TO BE TREATED AGAINST RUST PRIOR TO BACKFILL

4 PIPING SUPPORT DETAIL
SCALE: 3/4" = 1'-0"

OFFICE COPY
8/23-1-04
3/2/16
SP8347
7-51
7-52

A Q U A D Y N A M I C S D E S I G N G R O U P, I N C.

AQUADYNAMICS DESIGN GROUP, INC.
AQUATIC ENGINEERING CONSULTANTS
4910 S.W. 72ND AVENUE MIAMI, FLORIDA 33155
PHONE (305) 667-8975 FAX (305) 662-1002
e-mail: info@aquadynamics.net web site: www.aquadynamics.net

NOTICE TO BUILDER
TO THE BEST OF OUR KNOWLEDGE AND BELIEF, THE INFORMATION CONTAINED ON THESE DRAWINGS CONFORMS TO THE STANDARDS SET IN THE FLORIDA BUILDING CODE. THE CONTRACTOR SHALL BE RESPONSIBLE FOR VERIFYING ALL DIMENSIONS AND FIELD CONDITIONS PRIOR TO THE START OF THE WORK AND NOTIFY US IN WRITING AT ONCE OF ANY AND ALL ERRORS, DISCREPANCIES, INSTALLATION OR OMISSION PROBLEMS TO THE SUCCESSFUL COMPLETION OF THE PROJECT INDICATED.

SHEET TITLE
CASCADE SPA
SECTIONS
SCALE AS SHOWN

PROJECT NAME
THE LIDO HOTEL SPA
DECK LEVEL BEACH POOL, SPA & PLUNGE POOL
40 ISLAND AVENUE
MIAMI BEACH, FLORIDA

JOB No.	
DATE	05-06-2003
DRAWN BY	AQUADYNAMICS
SCALE	AS SHOWN
SHEET	SHEET 11 OF 15

No.	REVISIONS
1	
2	
3	11-21-03 PER DOH REVIEW
4	08-21-03 PER JOHN DILLON

SEAL

DRAWING NUMBER
SP-2.02

SPA
SCHEDULE OF EQUIPMENT

MARK	QTY.	ITEM	MFR	CAT. No.	DESCRIPTION
1	2	MAIN DRAIN ASSEMBLY	PENTAIR	542029	18" X 18" CYCOLAC MAIN DRAIN FRAME AND GRATE WITH TAMPERPROOF SCREWS. 196.12 SI OPEN AREA.
2	4	RETURN FITTINGS	PENTAIR	542002	RETURN FTG 1 1/2" X 3-4" WHITE ABS PLASTIC, DIRECTIONALLY ADJUSTABLE EYEBALL RETURN FITTING ON WALL
3	1	EQUALIZER FITTING	PENTAIR	542039	FOR USE WITH SKIMMER EQUALIZER PIPE
4	1	SKIMMER UNIT	HAYWARD	SP-1070Z	SKIMMER TOP LOADING NSF APPROVED ASSEMBLY WITH EQUALIZER FITTING OUTLET CONNECTION, WHITE ABS PLASTIC
5	1	STATIC FITTING	PENTAIR	542039	FOR USE WITH AUTO WATER LEVEL CONTROLLER MAKE UP WATER LINE. FTG TO BE INSTALLED 12" BELOW SPA WATER LEVEL
6	1	SPA LIGHTS	AMERLITE PRODUCTS	#78210500	SPA UNDERWATER LIGHT WITH STAINLESS STEEL FACE RING. 100W, 12V, 50 FT CORD. INCLUDE PENTAIR AMERLITE #78210S STAINLESS STEEL NICHE WITH 1" HUB OR EQUAL
7	1	TRANSFORMER BOX	INTERMATIC	PX-100	TRANSFORMER BOX IN WEATHER PROOF ENCLOSURE. ALL GIAMMANCO SAF-T-VOLT DUAL WINDING TYPE.
8	1	JUNCTION BOX	AMERICAN	#753107	JUNCTION BOX IN WEATHER PROOF NON-CORROSIVE ENCLOSURE REQUIRED
9	2	SPA JET PUMP	STA-RITE	P4E6GL MAX-E-GLASS II	2HP, SELF PRIMING PUMP WITH A HAIR AND LINT STRAINER, 120 GPM AT 60 TDH EACH.
10	1	FLOWMETER	BLUE-WHITE	CF-30200P	2" PIPE, 40-150 GPM
11	1	FILTER PUMP	STA-RITE	P4E6EL MAX-E-GLASS II	1 HP, SELF PRIMING PUMP WITH A HAIR AND LINT STRAINER, 50 GPM AT 60 TDH
12	1	TEST KIT	TAYLOR	K-2005	DUPLEX CAPABLE OF MEETING ALL CHEMICAL TESTS SPECIFIED BY THE FLORIDA ADMINISTRATIVE CODE IN CHAPTER 10D-5. FOR BROMINATED SPAS
13	16	SPA JET FITTINGS	HYDRO AIR	10-4562	HYDRO AIR INDUSTRIES 1 1/2" x 3-4" SLIP VENTURI TEE W/ 1/4" NOZZLE (10-12 GPM)
14	1	ANCHOR SOCKET	HANOVER	#4190B	BRASS SOCKET WITH GROUNDING LUG. EACH SOCKET SHALL BE PROPERLY GROUNDED IN ACCORDANCE WITH NATIONAL ELECTRICAL CODE STANDARDS.
15	1	ESCUTCHEON PLATE	PENTAIR	542048	STAINLESS STEEL COVER PLATE.
16	1	HANDRAIL	S.R. SMITH	HR-66-3 66"	3 BEND STAINLESS STEEL HANDRAIL HAVING AN OUTSIDE DIAMETER ANCHORED TO BOTTOM STEP TREAD.
17	2	PRESSURE GAUGES	THERMOCRAFT INDUSTRIES	PG 255	2" FACE 0-60 PSI MINIMUM DIAL READOUT OR EQUAL
18	1	FILTER UNIT	HARMSCO	BF 155SC	CARTRIDGE FILTER, 155 SF FILTER AREA WITH AIR RELIEF, SINGLE ELEMENT.
19	1	CL2 FEEDER	STENNER	45M5	STENNER 45M5 LIQUID FEEDER 50 GPD CAPACITY INTERLOCK ELECTRICALLY WITH FILTER PUMP (3.60 GPD REQUIRED)
20	1	PH FEEDER	STENNER	45M5	15 GALLON INTEGRAL STORAGE TANK W/ TANK MOUNTED STENNER 45M5 FEEDER/ 10 GPD CAPACITY BY CES JUPITER, FLORIDA/ PHONE: 1-800-940-1557
21	1	CHLORINE STORAGE CONTAINER			50 GALLON POLYPROPYLENE STORAGE TANK WITH LID CONTENTS OF TANK TO BE CLEARLY LABELED ON FRONT OF TANK
22	1	CHEMICAL CONTROLLER	CHENTROL	CONTROL # 230	110 VAC / SINGLE PHASE / 20 A WITH SET AND READOUT SCALE IN MILLIVOLTS ORP/PH
23	1	THERMOSTER	PASCO	#144	
24	2	GAS HEATER	TELEDYNE LAARS	LG-400	LAARS LITE2 NATURAL GAS HEATER, 400,000 BTU. VENT DIAMETER 9".
25	1	COLLECTOR TANK	COMPAC	F700	700 GALLON CAPACITY, ALL FIBERGLASS CONSTRUCTION AS MANUFACTURED BY COMPAC FILTRATION, INC. / 1-904-356-4003
26	1	WATER LEVEL CONTROLLER	COMPAC		WATER LEVELING DEVICE, AND FLOAT VALVE ASSEMBLY. THE VALVE IS ALSO EQUIPPED WITH A 1" PVC FILL LINE AND MANUALLY OPERATED BALL VALVE.
27	2	TIMER	INTERMATIC	PX100	A CLOCK SHALL BE POSTED IN SPA AREA TO WARN SPA USERS OF THE LENGTH OF TIME THAT THEY HAVE USED THE SPA
28	2	WATERFALL	TRITON	CMK-50	5.0 HP, SELF PRIMING PUMP, WITH 6" STRAINER 336 GPM AT 40 TDH
29	1	BLOWER	NORTON	DR-454	SPA BLOWER, TOTAL HOLE AREA 1.5 SQUARE INCH

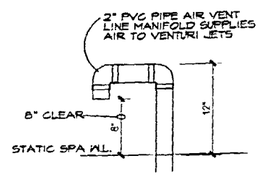

1 AIR VENT LINE DETAIL
NO SCALE

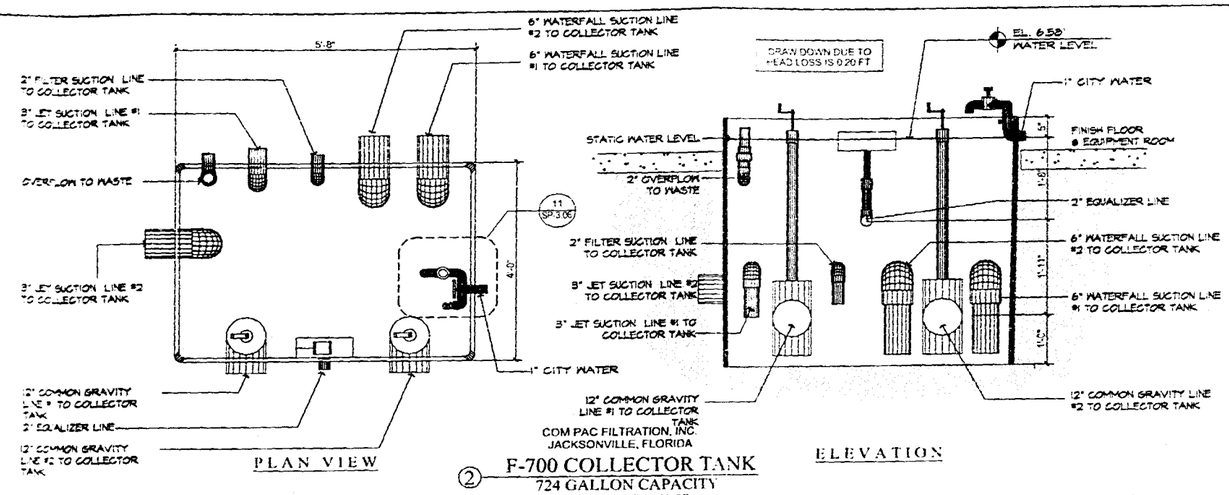

2 F-700 COLLECTOR TANK
724 GALLON CAPACITY
SCALE: 3/4" = 1'-0"

NOTE:
THESE ARE REQUIRED DEPT. OF HEALTH SPA RULES. THEY MAY ADDED TO ADDITIONAL RESORT SIGNAGE ..... BUT MUST MEET THE MINIMUM REQUIREMENTS FOR HEIGHT, COLOR, ETC AS INDICATED

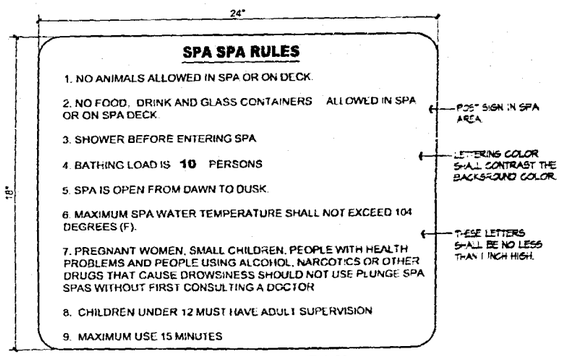

3 RULES SIGN DETAIL

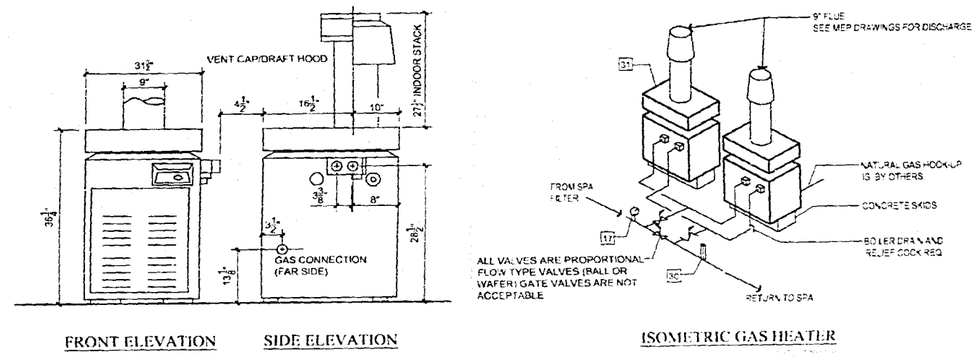

INTERNAL HEATER PARTS ARE NON-TOXIC TO BATHERS WHEN USED IN CONJUNCTION WITH POTABLE WATER
(2) LAARS LITE2 HEATERS MODEL LG400 / 400,000 BTU / SPA GAS HEATER WITH MILLIVOLT IGNITION
ONE THERMOSTAT

4 SPA GAS HEATER DETAIL
SCALE: 3/4" = 1'-0"

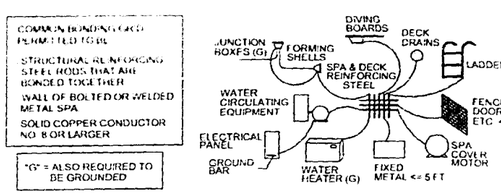

5 COMMON BONDING GRID DETAIL
NTS

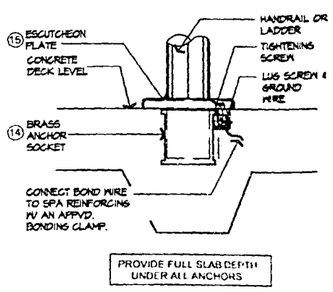

6 ANCHOR SOCKET DETAIL
NTS

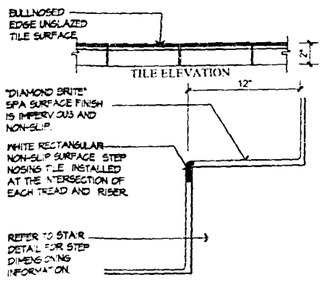

7 STEP NOSING DETAIL
NTS

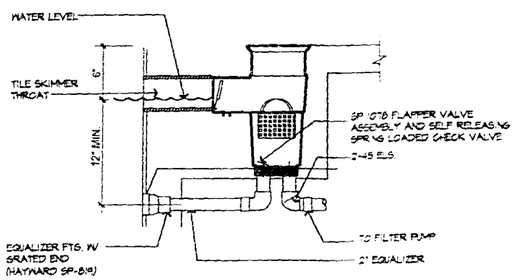

8 SECTION THROUGH SKIMMER
(MEETS SECTION #8 NSF STANDARD #50)
NO SCALE

7-S1
7-S2

A Q U A D Y N A M I C S D E S I G N G R O U P, I N C.

AQUADYNAMICS DESIGN GROUP, INC.
AQUATIC ENGINEERING CONSULTANTS
4910 S.W. 72ND AVENUE MIAMI, FLORIDA 33155
PHONE (305) 667-8975 FAX (305) 662-1002
e-mail: info@aquadynamics.net web site: www.aquadynamics.net

NOTICE TO BUILDER
TO THE BEST OF OUR KNOWLEDGE AND BELIEF, THE INFORMATION CONTAINED ON THESE DRAWINGS CONFORMS TO THE STANDARDS SET IN THE FLORIDA BUILDING CODE. THE CONTRACTOR SHALL BE RESPONSIBLE FOR VERIFYING ALL DIMENSIONS, AND FIELD CONDITIONS PRIOR TO THE START OF THE WORK, AND NOTIFY THE ENGINEER AT ONCE OF ANY AND ALL ERRORS, DISCREPANCIES, OMISSIONS, AMBIGUITIES OR CONFLICTS PERTAINING TO THE SUCCESSFUL COMPLETION OF THE PROJECT INDICATED.

SHEET TITLE
CASCADE SPA
DETAILS
SCALE AS SHOWN

PROJECT NAME
THE LIDO HOTEL SPA
DECK LEVEL BEACH POOL, SPA & PLUNGE POOL
40 ISLAND AVENUE
MIAMI BEACH, FLORIDA

JOB No.	
DATE	03-06-2003
DRAWN BY	AQUADYNAMICS
SCALE	AS SHOWN
SHEET	SHEET 12 OF 15

No.	REVISIONS
1	11-21-03 PER DOH REVIEW
2	03-21-03 PER JOHN DILLON

SEAL

DRAWING NUMBER
SP-2.03

PLUNGE POOL
SCHEDULE OF EQUIPMENT

I.D. No.	QTY.	ITEM	MFR	CAT. No.	DESCRIPTION
1	1	MAIN DRAIN ASSEMBLY	HAYWARD	SP1032	12" X 12" CYCOLAC MAIN DRAIN FRAME AND GRATE WITH TAMPERPROOF SCREWS 68 SI OPEN AREA EACH
2	4	RETURN FITTINGS	HAYWARD	SP-1419D	RETURN FTG 1 1/2" X 3.1" WHITE ABS PLASTIC, DIRECTIONALLY ADJUSTABLE EYEBALL RETURN FITTING ON WALL.
3	1	EQUALIZER FITTING	HAYWARD	SP-1019	FOR USE WITH SKIMMER EQUALIZER PIPE
4	1	SKIMMER UNIT	HAYWARD	SP-10702	SKIMMER TOP LOADING NSF APPROVED ASSEMBLY WITH EQUALIZER FITTING OULET CONNECTION. WHITE ABS PLASTIC
5	1	STATIC FITTING	HAYWARD	SP-1019	FOR USE WITH AUTO WATER LEVEL CONTROLLER MAKE-UP WATER LINE. FTG TO BE INSTALLED 12" BELOW PLUNGE POOL WATER LEVEL, 2".
6	1	PLUNGE POOL LIGHT	AMERLITE	#784231	PLUNGE POOL UNDERWATER LIGHT WITH STAINLESS STEEL FACE RING 75 W, 12V, 75 FT CORD. INCLUDE AMERLITE PRODUCTS #78210500 STAINLESS STEEL NICHE WITH 1" HUB, OR EQUAL
7	1	TRANSFORMER BOX	INTERMATIC	PX100	TRANSFORMER BOX IN WEATHER PROOF ENCLOSURE. DUAL WINDING TYPE. 100 WATT
8	1	JUNCTION BOX	AMERICAN	#783107	JUNCTION BOX IN WEATHER PROOF NON-CORROSIVE ENCLOSURE REQUIRED.
9	1	FLOWMETER	BLUE-WHITE	#F-30200P	2" PIPE, 40-150 GPM
10	1	FILTER PUMP	STARITE	P4E6EL	1 H.P. SELF PRIMING PUMP WITH A HAIR AND LINT STRAINER. 50 GPM AT 60 TDH EACH /
11	1	TEST KIT	TAYLOR	# 2000-5	DUPLEX CAPABLE OF MEETING ALL CHEMICAL TESTS SPECIFIED BY THE FLORIDA ADMINISTRATIVE CODE IN CHAPTER 100-5. FOR BROMINATED PLUNGE POOLS
12	2	ANCHOR SOCKET	HANOVER	#4190B	BRASS SOCKET WITH GROUNDING LUG. EACH SOCKET SHALL BE PROPERLY GROUNDED IN ACCORDANCE WITH NATIONAL ELECTRICAL CODE STANDARDS.
13	2	ESCUTCHEON PLATE	PENTAIR	#542048	STAINLESS STEEL COVER PLATE.
14	1	LADDER	S.R. SMITH	3HR-6-065	3-TREAD LADDER, STAINLESS STEEL RAILS, 1.90" X 0.065" THICK WALL. TREADS TO HAVE A NON SLIP SURFACE FINISH. REFER TO PLAN FOR LOCATION OF FOUR TREAD LADDERS
15	2	PRESSURE GAUGES	ASHCROFT		2" FACE 0-60" PSI PRESSURE MINIMUM DIAL READOUT.
16	1	FILTER UNIT	HARMSCO	BF155SC	CARTRIDGE, 155 SQFT @ 0.375 GPM/SQFT SINGLE ELEMENT / 133.33 SQFT FILTER AREA REQUIRED
17	1	CL2 FEEDER	BIOLAB	MA18	EROSION FEEDER 8.4 PPD CAPACITY PROVIDED / 3.60 PPD REQUIRED WITH FLOW REGULATING VALVE & FLOWMETER
18	1	WATER LEVEL CONTROLLER	VAC PAC OR EQUAL		FLOAT TYPE WITH COLLECTOR TUBE
19	1	THERMOMETER	ASHCROFT		32D TO 248 DF
20	1	COLLECTOR TANK	COMPAC	CUSTOM	60 GALLON CAPACITY, ALL FIBERGLASS CONSTRUCTION AS MANUFACTURED BY COMPAC FILTRATION, INC 1-954-356-4003
21	1	PORTABLE VACUUM			SHARED WITH PLUNGE POOL
22	1	CLOCK			A CLOCK SHALL BE POSTED IN PLUNGE POOL AREA TO WARN PLUNGE POOL USERS OF THE LENGTH OF TIME THAT THEY HAVE USED THE PLUNGE POOL
23	1	WATER CHILLER	CALOREX	MODEL AT-880R	REVERSE CYCLE HEAT PUMP CHILLER.
24	1	CHEMICAL CONTROLLER	STRANTROL	SYSTEM 2	CHEMICAL CONTROLLER 110 VAC / 20A CKT.

NOTE: A CLOCK SHALL BE VISIBLE FROM THE PLUNGE POOL POOL TO ASSIST THE USER IN DETERMINING MAXIMUM USE OF 15 MINUTES.

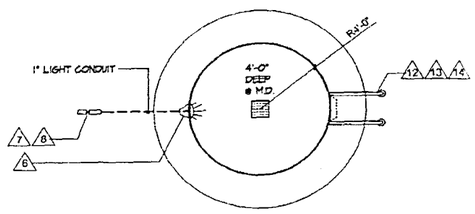

NOTE: A CLOCK SHALL BE VISIBLE FROM THE PLUNGE POOL POOL TO ASSIST THE USER IN DETERMINING MAXIMUM USE OF 15 MINUTES.

PLUNGE POOL POOL PLAN
SCALE: 1/4"=1'-0"

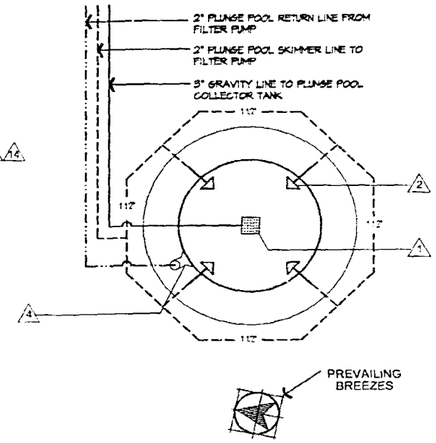

PLUNGE POOL PIPING PLAN
SCALE: 1/4"=1'-0"

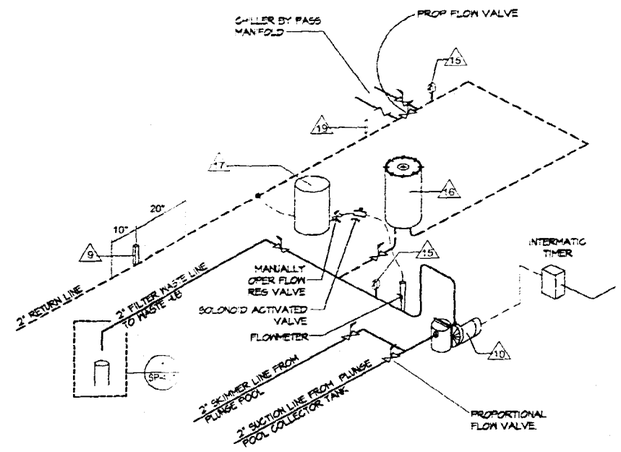

PLUNGE POOL EQUIPMENT PIPING ISOMETRIC
NO SCALE

10" SHOTCRETE SLAB REINFORCED W/ #4 @ 8" EACH WAY, TOP AND BOTTOM.

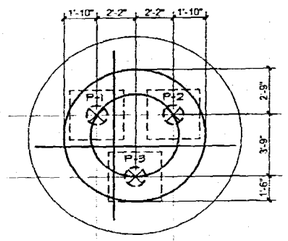

PLUNGE POOL PILING PLAN
SCALE: 1/4"=1'-0"

PLUNGE POOL DATA

AREA= 50 S.F
PERIMETER= 25 L.F.
VOLUME= 1500 GALS
FILTER RATE= 50 GPM
BATHING LOAD= 5 PERSON
TURNOVER TIME= 30 MINUTES

PLAN LEGEND

- PVC SCHEDULE 40 NSF APPVD. PIPE (SUPPLY LINE)
- PVC SCHEDULE 40 NSF APPVD. PIPE (SUCTION LINE)
- PVC SCHEDULE 40 NSF APPVD. PIPE (GRAVITY LINE)

DESIGN VELOCITIES

GRAVITY LINES = 3 FPS
SUCTION LINES = 6 FPS
PRESSURE LINES = 8 FPS

NOTE: THE PIPING SHOWN IS A GRAPHIC REPRESENTATION OF PIPE ROUTE. ACTUAL ROUTING OF PIPING AROUND PLUNGE POOL MAY DIFFER FROM THIS PLAN.

NOTE:
THESE ARE REQUIRED DEPT. OF HEALTH POOL RULES. THEY MAY ADDED TO ADDITIONAL RESORT SIGNAGE ..... BUT MUST MEET THE MINIMUM REQUIREMENTS FOR HEIGHT, COLOR, ETC AS INDICATED.

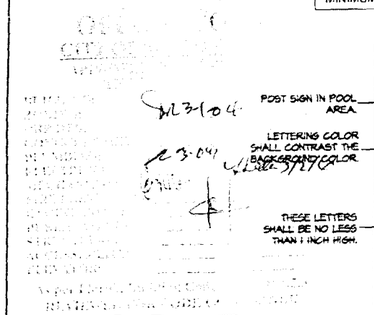

COLD PLUNGE POOL RULES

1. NO ANIMALS ALLOWED IN POOL OR ON DECK
2. NO FOOD, DRINK AND GLASS CONTAINERS ALLOWED IN POOL OR ON POOL DECK.
3. SHOWER BEFORE ENTERING POOL
4. BATHING LOAD IS 5 PERSONS
5. POOL IS OPEN FROM DAWN TO DUSK.
6. PREGNANT WOMEN, SMALL CHILDREN, PEOPLE WITH HEALTH PROBLEMS AND PEOPLE USING ALCOHOL, NARCOTICS OR OTHER DRUGS THAT CAUSE DROWSINESS SHOULD NOT USE PLUNGE POOL POOLS WITHOUT FIRST CONSULTING A DOCTOR
7. CHILDREN UNDER 12 MUST HAVE ADULT SUPERVISION
8. MAXIMUM USE 15 MINUTES

(4) RULES SIGN DETAIL

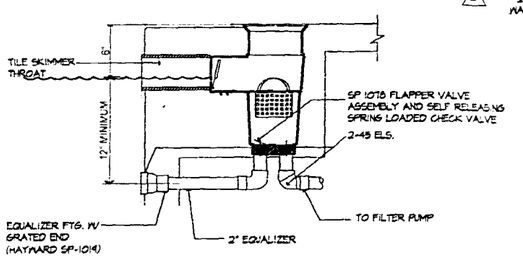

(5) SECTION THROUGH SKIMMER
(MEETS SECTION #8 NSF STANDARD #50)

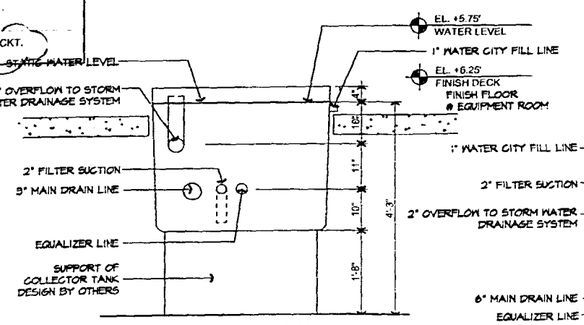

ELEVATION

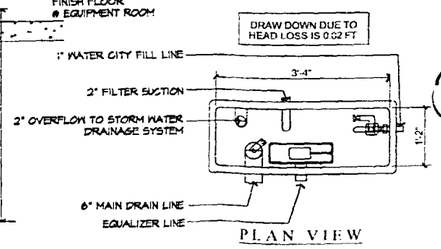

PLAN VIEW

(6) PLUNGE POOL COLLECTOR TANK
60 GALLON CAPACITY
SCALE: 3/4" = 1'-0"

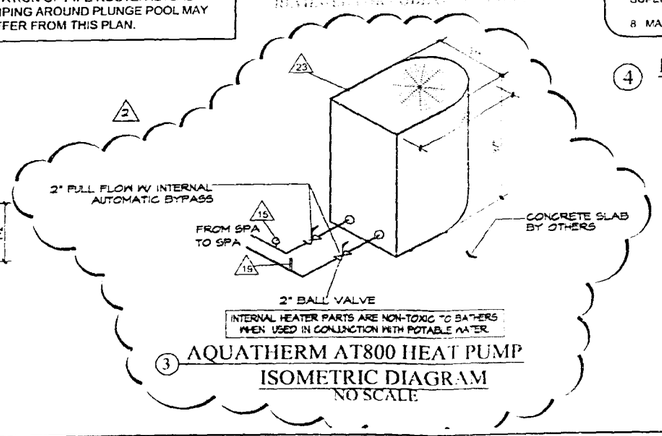

(3) AQUATHERM AT800 HEAT PUMP
ISOMETRIC DIAGRAM
NO SCALE

A Q U A D Y N A M I C S D E S I G N G R O U P, I N C.

AQUADYNAMICS DESIGN GROUP, INC.
AQUATIC ENGINEERING CONSULTANTS
4910 S.W. 72ND AVENUE MIAMI, FLORIDA 33155
PHONE (305) 667-8975 FAX (305) 662-1002
e-mail: info@aquadynamics.net web site: www.aquadynamics.net

NOTICE TO BUILDER
TO THE BEST OF OUR KNOWLEDGE AND BELIEF, THE INFORMATION CONTAINED ON THESE DRAWINGS CONFORMS TO THE STANDARDS NOT IN THE FLORIDA BUILDING CODE. THE CONTRACTOR SHALL BE RESPONSIBLE FOR VERIFYING ALL DIMENSIONS AND FIELD CONDITIONS PRIOR TO THE START OF THE WORK, AND NOTIFYING THE ENGINEER, AT ONCE, OF ANY AND ALL ERRORS, DISCREPANCIES, IMPERFECTIONS, OR OMISSIONS PERTAINING TO THE SUCCESSFUL COMPLETION OF THE PROJECT INDICATED.

SHEET TITLE
PLUNGE POOL
PIPING & LAYOUT PLAN
SCALE AS SHOWN

PROJECT NAME
THE LIDO HOTEL SPA
DECK LEVEL BEACH POOL, SPA & PLUNGE POOL
40 ISLAND AVENUE
MIAMI BEACH, FLORIDA

JOB No.	
DATE	08-06-2003
DRAWN BY	AQUADYNAMICS
SCALE	AS SHOWN
SHEET	SHEET 13 OF 15

No	REVISIONS
1	
2	
3	
4	11-21-03 PER DCH REVIEW
5	08-21-03 PER DCH REVISION

SEAL

DRAWING NUMBER
SP-3.01

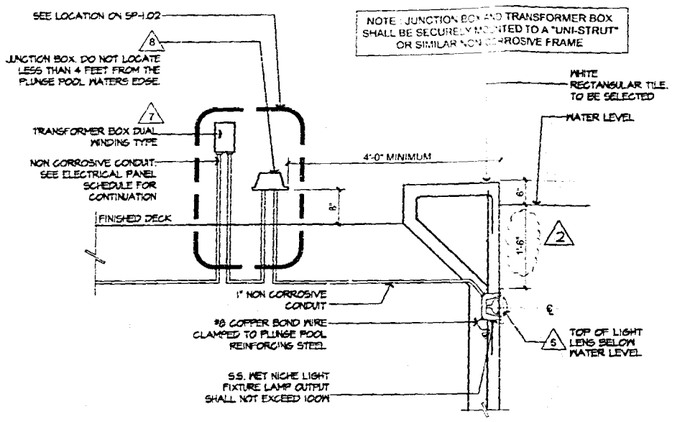

1 PLUNGE POOL UNDERWATER LIGHT DETAIL
SCALE: 3/4" = 1'-0"

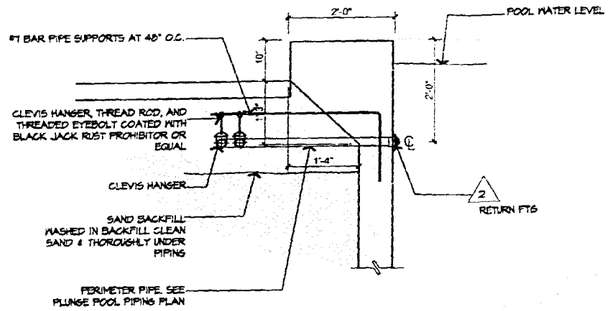

NOTES:
- BACKFILL AROUND PIPING WITH CLEAN SAND ONLY NO ROCKS OR DEBRIS
- ALL EXPOSED METAL TO BE TREATED AGAINST RUST PRIOR TO BACKFILL

2 PIPING SUPPORT DETAIL
SCALE: 3/4" = 1'-0"

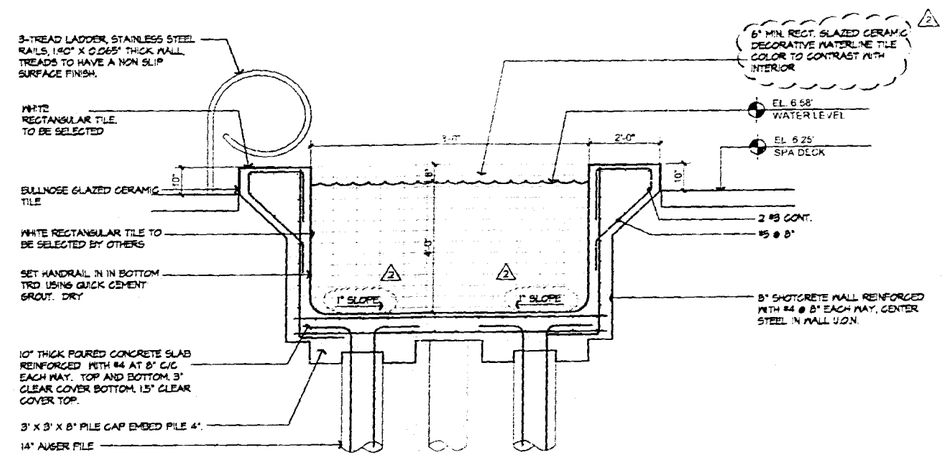

3 PLUNGE POOL SECTION
SCALE: 1/2" = 1'-0"

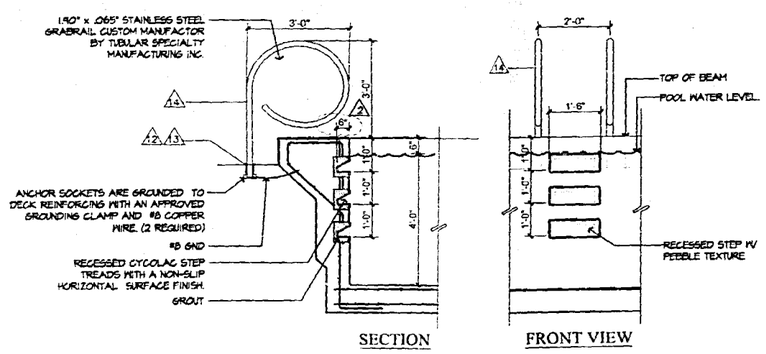

4 3 TREAD CROSS-BRACED LADDER DETAIL
SCALE: 1/2" = 1'-0"

NOTE: ALL METAL PARTS IN THE POOL AREA SHALL BE BONDED TO THE POOL REINFORCING STEEL WITH A #8 COPPER WIRE AND AN APPROVED NEC GROUNDING CLAMP. ALL BONDING SHALL COMPLY WITH THE REQUIREMENTS SET FORTH IN THE NATIONAL ELECTRICAL CODE ARTICLE 680 AND ALL LOCAL ORDINANCES.

COMMON BONDING GRID PERMITTED TO BE:
- STRUCTURAL REINFORCING STEEL RODS THAT ARE BONDED TOGETHER
- WALL OF BOLTED OR WELDED METAL SPA
- SOLID COPPER CONDUCTOR NO. 8 OR LARGER

"G" = ALSO REQUIRED TO BE GROUNDED

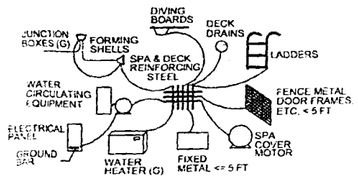

5 COMMON BONDING GRID DETAIL
NTS

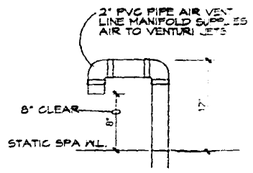

6 AIR VENT LINE DETAIL
NO SCALE

APPROVED
7-51
7-52

A Q U A D Y N A M I C S D E S I G N G R O U P, I N C.

AQUADYNAMICS DESIGN GROUP, INC.
AQUATIC ENGINEERING CONSULTANTS
4910 S.W. 72ND AVENUE MIAMI, FLORIDA 33155
PHONE (305) 667-8975 FAX (305) 662-1002
e-mail: info@aquadynamics.net web site: www.aquadynamics.net

NOTICE TO BUILDER
TO THE BEST OF OUR KNOWLEDGE AND BELIEF, THE INFORMATION CONTAINED ON THESE DRAWINGS CONFORMS TO THE STANDARDS SET IN THE FLORIDA BUILDING CODE. THE CONTRACTOR SHALL BE RESPONSIBLE FOR VERIFYING ALL DIMENSIONS AND FIELD CONDITIONS PRIOR TO THE START OF THE WORK AND NOTIFYING THE ENGINEER AT ONCE OF ANY AND ALL ERRORS, DISCREPANCIES, MISCALLIGNMENTS OR OMISSIONS PERTAINING TO THE SUCCESSFUL COMPLETION OF THE PROJECT INDICATED.

SHEET TITLE
PLUNGE POOL
SECTION & DETAILS
SCALE AS SHOWN

PROJECT NAME
THE LIDO HOTEL SPA
DECK LEVEL BEACH POOL, SPA & PLUNGE POOL
40 ISLAND AVENUE
MIAMI BEACH, FLORIDA

JOB No.	
DATE	08-06-2003
DRAWN BY:	AQUADYNAMICS
SCALE	AS SHOWN
SHEET	SHEET 14 OF 15

No.	REVISIONS
1	
2	
3	11-21-03 PER DOH REVIEW
4	12-21-03 PER JOHN DILLON

SEAL

DRAWING NUMBER
SP-3.02

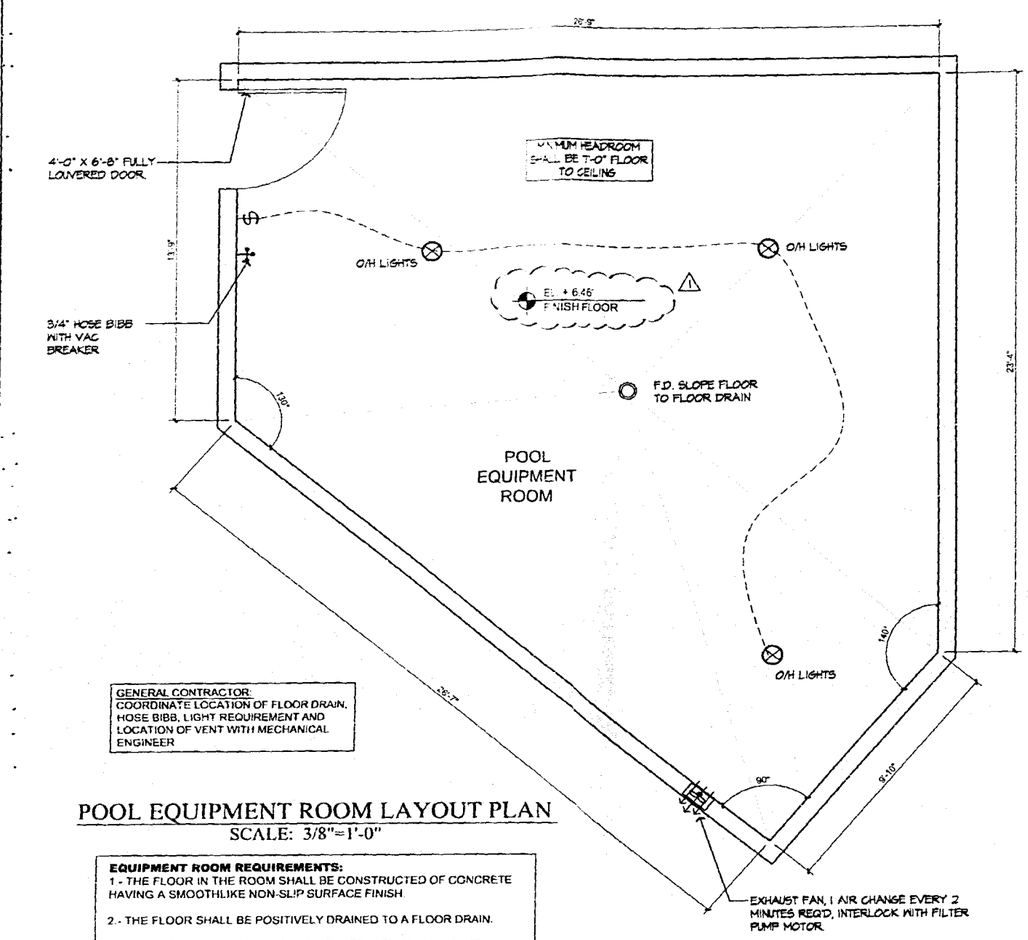

GENERAL CONTRACTOR:
COORDINATE LOCATION OF FLOOR DRAIN, HOSE BIBB, LIGHT REQUIREMENT AND LOCATION OF VENT WITH MECHANICAL ENGINEER

POOL EQUIPMENT ROOM LAYOUT PLAN
SCALE: 3/8"=1'-0"

EQUIPMENT ROOM REQUIREMENTS:

1.- THE FLOOR IN THE ROOM SHALL BE CONSTRUCTED OF CONCRETE HAVING A SMOOTHLIKE NON-SLIP SURFACE FINISH.

2.- THE FLOOR SHALL BE POSITIVELY DRAINED TO A FLOOR DRAIN.

3.- A 3/4 INCH HOSE BIBB WITH VACUUM BREAKER SHALL BE LOCATED INSIDE THE ROOM.

4.- THE OVERHEAD LIGHT SHALL EMIT AT LEAST 30 FOOT CANDLES OF ILLUMINATION AT THE FLOOR LEVEL.

5.- CLEARANCES TO PUMPS AND FILTERS FROM WALLS SHALL BE AS SPECIFIED BY THE MANUFACTURER

FILTER PIPING REQUIREMENTS:

1.- TAG ALL VALVES AND POST OPERATING INSTRUCTION INSIDE THE ROOM.

2.- ALL FACE PIPING SHALL BE PVC SCHEDULE 40 NSF-PW. ALL JOINT SHALL BE NON-THREADED SOLVENT WELD TYPE.

3.- GATE VALVES SHALL NOT BE USED AS A MEANS FOR CONTROLLING THE FLOW OF WATER. ALL PROPORTIONAL FLOW TYPE VALVES ARE INDICATED ON THE DRAWING.

4.- ELECTRICALLY OPERATED CHEMICAL FEEDERS SHALL BE INTERLOCKED WITH THE FILTER PUMP MOTOR.

5.- THE CHEMICAL SOLUTION TANK SHALL BE LABELED ACCORDING TO THE SOLUTION OF WHICH IT CONTAINS

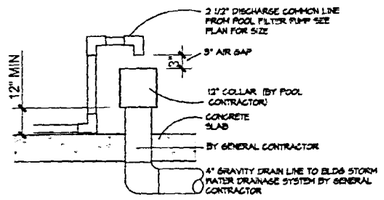

1 POOL WASTE LINE AIR GAP DETAIL
N.T.S.

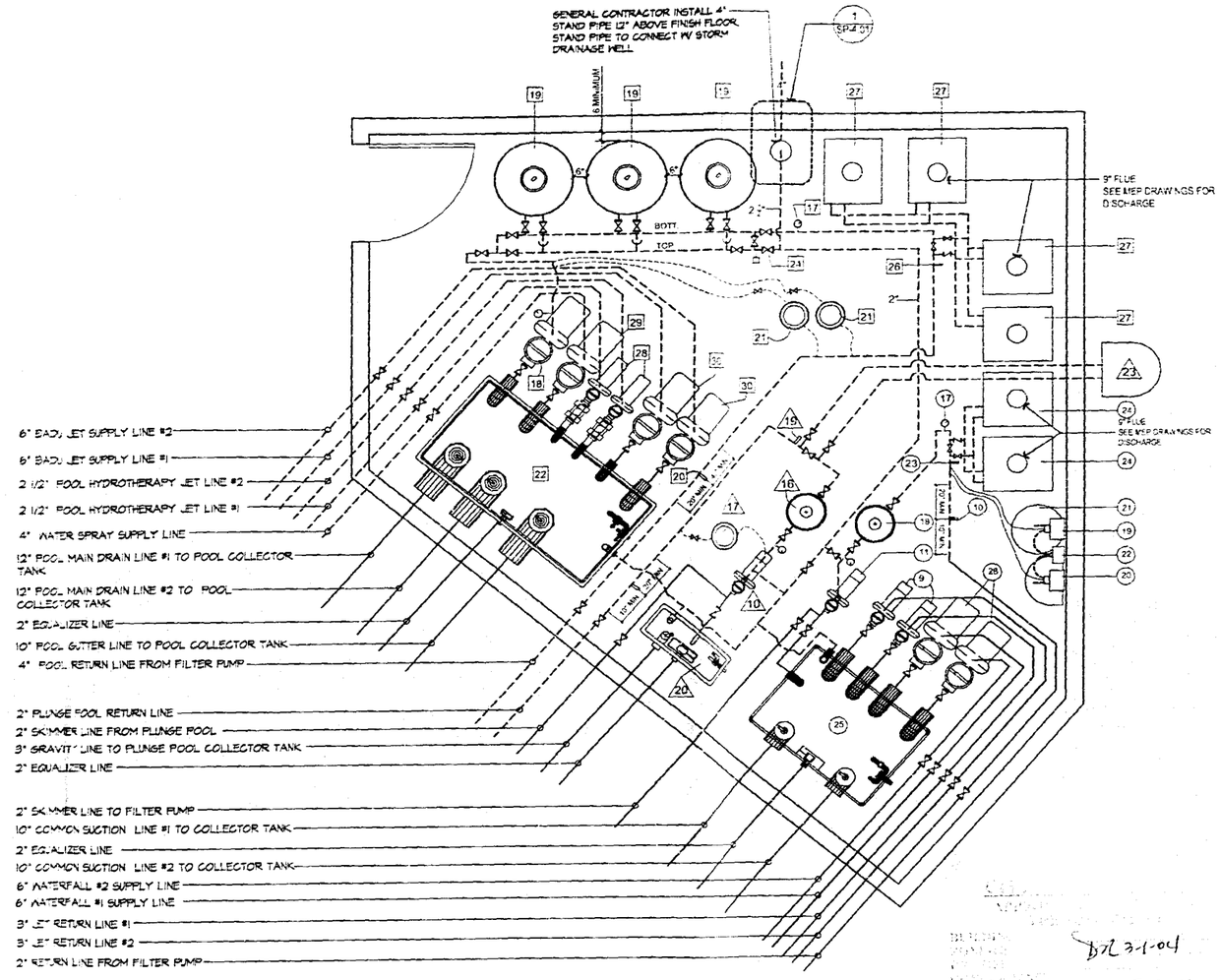

POOL EQUIPMENT PIPING PLAN
SCALE: 3/8"=1'-0"

DRL 3-1-04

3-2-04

3/3/04

A Q U A D Y N A M I C S D E S I G N G R O U P, I N C.

AQUADYNAMICS DESIGN GROUP, INC.
AQUATIC ENGINEERING CONSULTANTS
4910 S.W. 72ND AVENUE MIAMI, FLORIDA 33155
PHONE (305) 667-8975 FAX (305) 662-1002
e-mail: info@aquadynamics.net web site: www.aquadynamics.net

NOTICE TO BUILDER
TO THE BEST OF OUR KNOWLEDGE AND BELIEF, THE INFORMATION CONTAINED ON THESE DRAWINGS CONFORMS TO THE STANDARDS SET IN THE FLORIDA BUILDING CODE. THE CONTRACTOR SHALL BE RESPONSIBLE FOR VERIFYING ALL DIMENSIONS AND FIELD CONDITIONS PRIOR TO THE START OF WORK AND NOTIFYING THE ENGINEER, AT ONCE, OF ANY AND ALL ERRORS, DISCREPANCIES, INSTALLATION OR DESIGN PROBLEMS PERTAINING TO THE SUCCESSFUL COMPLETION OF THE PROJECT INDICATED.

SHEET TITLE
BECH POOL, PLUNGE POOL & SPA
EQUIPMENT LAYOUT
SCALE 3/8"=1'-0"

PROJECT NAME
THE LIDO HOTEL SPA
DECK LEVEL BEACH POOL, SPA & PLUNGE POOL
40 ISLAND AVENUE
MIAMI BEACH, FLORIDA

JOB No.	
DATE	06-06-2003
DRAWN BY	AQUADYNAMICS
SCALE	AS SHOWN
SHEET	SHEET 15 OF 15

No.	REVISIONS
1	
2	
3	11-21-03 PER CITY REVIEW
4	08-21-03 PER JOHN DILION

SEAL

DRAWING NUMBER
SP-401

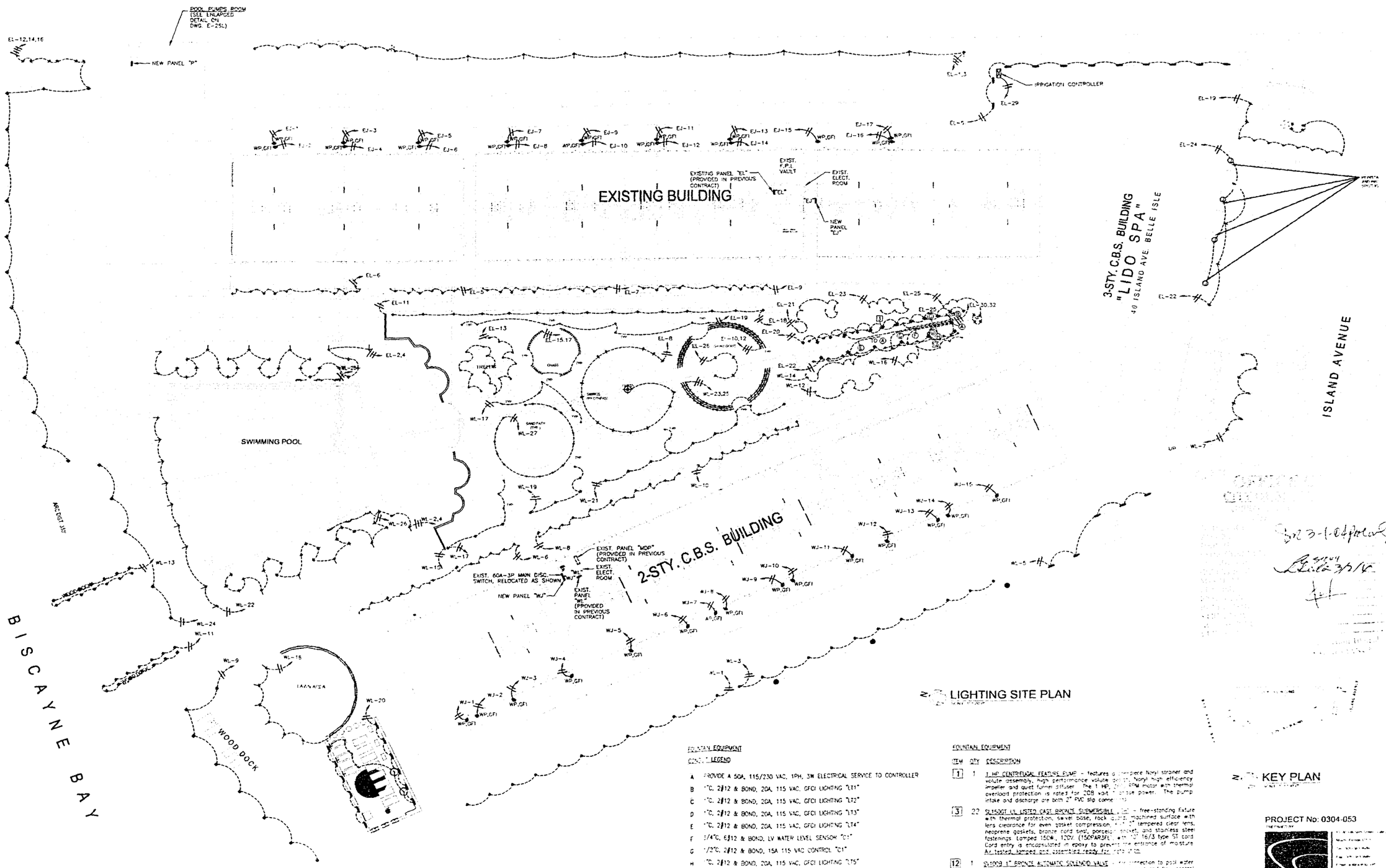

FOUNTAIN EQUIPMENT

CONC. 1 LEGEND

A	PROVIDE A 50A, 115/230 VAC, 1PH, 3W ELECTRICAL SERVICE TO CONTROLLER
B	1"C, 2#12 & BOND, 20A, 115 VAC, GFCI LIGHTING "LT1"
C	1"C, 2#12 & BOND, 20A, 115 VAC, GFCI LIGHTING "LT2"
D	1"C, 2#12 & BOND, 20A, 115 VAC, GFCI LIGHTING "LT3"
E	1"C, 2#12 & BOND, 20A, 115 VAC, GFCI LIGHTING "LT4"
F	3/4"C, 6#12 & BOND, LV WATER LEVEL SENSOR "C1"
G	1/2"C, 2#12 & BOND, 15A 115 VAC CONTROL "C1"
H	1"C, 2#12 & BOND, 20A, 115 VAC, GFCI LIGHTING "L75"
I	1"C, 2#12 & BOND, 20A, 115 VAC, GFCI LIGHTING "L76"

FOUNTAIN EQUIPMENT

ITEM	QTY	DESCRIPTION
1	1	1 HP, CENTRIFUGAL FEATURE PUMP - features a one-piece Noryl strainer and volute assembly, high performance volute design, Noryl high efficiency impeller and quiet funnel diffuser. The 1 HP, 3450 RPM motor with thermal overload protection is rated for 208 volt 1 phase power. The pump intake and discharge are both 2" PVC slip connection.
3	22	SL150GT UL LISTED CAST BRONZE SUBMERSIBLE - [illegible] - free-standing fixture with thermal protection, swivel base, rock guard, machined surface with lens clearance for even gasket compression, [illegible] of tempered clear lens, neoprene gaskets, bronze cord seal, porcelain socket, and stainless steel fastenings. Lamped 150W, 120V (150PAR38FL, with 50' 16/3 type ST cord. Cord entry is encapsulated in epoxy to prevent the entrance of moisture. As tested, lamped and assembled ready for [illegible]
12	1	SV1009 1" BRONZE AUTOMATIC SOLENOID VALVE - [illegible] connection to pool water supply line. Features include cast bronze body and [illegible] and flow control stem for manual open/close control. Supplied with 120 VAC coil.

PROJECT ARCHITECT
ALISON SPEAR, A.I.A.
180 NE 39th St., SUITE 222, MIAMI, FL 33137
305-438-1200 fax 305-438-1221

SEAL

OWNER OF DOCUMENTS NOTICE
Drawings and specifications, as instruments of service, are the exclusive property of Alison Spear, AIA whether the project for which they were prepared is executed and constructed or not. These documents are not to be reproduced in any form and they are not to be used by the project owner or other entities on any other projects or for alterations to the original project except by written authorization from the Architect.

PROJECT TITLE
LIDO SPA HOTEL
SITE LIGHTING - RENOVATION
40 ISLAND AVENUE, MIAMI BEACH, FL 33139

DRAWING TITLE
SITE PLAN
PROPOSED LIGHTING AND POWER PLAN

DRAWN BY C.P.
CHECKED BY R.J.M.

ISSUES

REVISIONS	ISSUE DATE

PROJECT No: 0304-053

uciengineering

SHEET NO
E-1SL

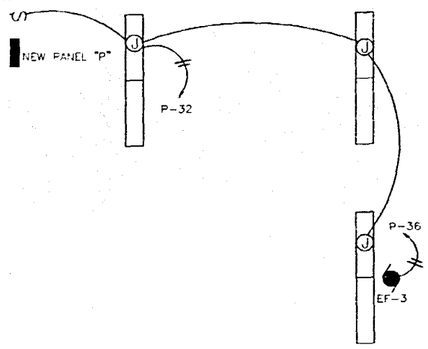

POOL ROOM DETAIL - LIGHTING
1/4"=1'-0"

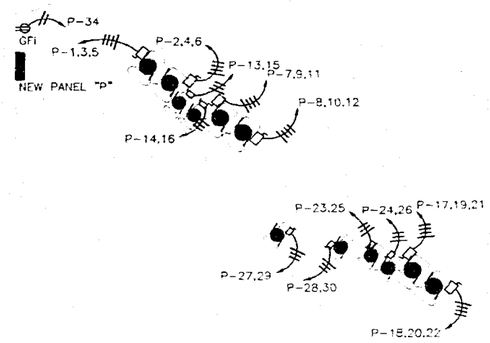

POOL ROOM DETAIL - POWER
1/4"=1'-0"

PROJECT ARCHITECT
ALISON SPEAR, A.I.A.
180 NE 39th St., SUITE 222, MIAMI, FL 33137
305-438-1200 fax 305-438-1221

SEAL

OWNER OF DOCUMENTS NOTICE
Drawings and specifications, as instruments of service, are the exclusive property of Alison Spear, AIA whether the project for which they were prepared is executed and constructed or not. These documents are not to be reproduced in any form and they are not to be used by the project owner or others on any other projects or for alterations to the original project except by written authorization from the Architect.

PROJECT TITLE
LIDO SPA HOTEL
SITE LIGHTING - RENOVATION
40 ISLAND AVENUE, MIAMI BEACH, FL 33139

DRAWING TITLE
POOL PUMPS ROOM
AND PANEL SCHEDULE

DRAWN BY C.P.
CHECKED BY R.J.M.
ISSUES
ISSUE DATE

PROJECT No: 0304-053

uciengineering

SHEET NO.
E-2SL

EXISTING ELECTRICAL PANEL SCHEDULE "EL"

TYPE : AQ. GE (PROVIDED IN PREVIOUS CONTRACT)
MOUNTING : SURFACE 14,000 AIC
LOCATION : ELECTRICAL ROOM – SOUTH SIDE
MAINS : 125 AMP MAIN CIRCUIT BREAKER
BUS RATING : 125 AMP
VOLTAGE : 208Y/120V–3PHASE–4W

DESCRIPTION	WIRE & COND. SIZE	LOAD (V.A.)	POLE / TRIP	CKT. No.	A	B	C	CKT. No.	POLE / TRIP	LOAD (V.A.)	WIRE & COND. SIZE	DESCRIPTION
LANDSCAPE LIGHTS*	#10 – 1/2"	510	1** / 20	1**				2	1** / 20	625	#10 – 1/2"	LANDSCAPE LIGHTS*
LANDSCAPE LIGHTS*	#10 – 1/2"	550	1** / 20	3				4	1** / 20	625	#10 – 1/2"	LANDSCAPE LIGHTS*
LANDSCAPE LIGHTS*	#10 – 1/2"	800	1** / 20	5				6	1** / 20	735	#10 – 1/2"	LANDSCAPE LIGHTS*
LANDSCAPE LIGHTS*	#10 – 1/2"	730	1** / 20	7				8	1** / 20	553	#10 – 1/2"	LANDSCAPE LIGHTS*
LANDSCAPE LIGHTS*	#10 – 1/2"	730	1** / 20	9				10	1** / 20	416	#10 – 1/2"	LANDSCAPE LIGHTS*
LANDSCAPE LIGHTS*	#10 – 1/2"	1,020	1** / 20	11				12	1** / 20	416	#10 – 1/2"	LANDSCAPE LIGHTS*
LANDSCAPE LIGHTS*	#10 – 1/2"	665	1** / 20	13				14	1** / 20	540	#10 – 1/2"	LANDSCAPE LIGHTS*
LANDSCAPE LIGHTS*	#10 – 1/2"	830	1** / 20	15				16	1** / 20	1,380	#10 – 1/2"	LANDSCAPE LIGHTS*
LANDSCAPE LIGHTS*	#10 – 1/2"	830	1** / 20	17				18	1** / 20	735	#10 – 1/2"	LANDSCAPE LIGHTS*
LANDSCAPE LIGHTS*	#10 – 1/2"	200	1** / 20	19				20	1** / 20	1,020	#10 – 1/2"	LANDSCAPE LIGHTS*
LANDSCAPE LIGHTS*	#10 – 1/2"	1,080	1** / 20	21				22	1** / 20	820	#10 – 1/2"	LANDSCAPE LIGHTS*
LANDSCAPE LIGHTS*	#10 – 1/2"	540	1** / 20	23				24	1** / 20	735	#10 – 1/2"	LANDSCAPE LIGHTS*
LANDSCAPE LIGHTS*	#10 – 1/2"	480	1** / 20	25				26	1** / 20	735	#10 – 1/2"	LANDSCAPE LIGHTS*
LANDSCAPE LIGHTS*	#10 – 1/2"	416	1** / 20	27				28	1** / 20	735	#10 – 1/2"	LANDSCAPE LIGHTS*
IRRIG. CONTROLLER	#10 – 1/2"	416	1** / 20	29				30	2 / 50	7,500	#4 IN 1-1/4"	FOUNTAIN CONTROLLER
SPACE				31				32				SPACE
SPACE				33				34				SPACE
SPACE				35				36				SPACE
SPACE				37				38				SPACE
SPACE				39				40				SPACE
SPACE				41				42				SPACE

* CONTROLLED BY PHOTOCELL THROUGH LIGHTING CONTACTOR
** PROVIDE GFI CIRCUIT BREAKER

TOTAL LOAD: 26,948 VA
AMPS: 75

EXISTING ELECTRICAL PANEL SCHEDULE "WL"

TYPE : AQ. GE (PROVIDED IN PREVIOUS CONTRACT)
MOUNTING : SURFACE 14,000 AIC
LOCATION : ELECTRICAL ROOM
MAINS : M.L.O.
BUS RATING : 125 AMP
VOLTAGE : 208Y/120V–3PHASE–4W

DESCRIPTION	WIRE & COND. SIZE	LOAD (V.A.)	POLE / TRIP	CKT. No.	A	B	C	CKT. No.	POLE / TRIP	LOAD (V.A.)	WIRE & COND. SIZE	DESCRIPTION
LANDSCAPE LIGHTS*	#10 – 1/2"	420	1** / 20	1				2	1** / 20	1,050	#10 – 1/2"	LANDSCAPE LIGHTS*
LANDSCAPE LIGHTS*	#10 – 1/2"	420	1** / 20	3				4	1** / 20	1,080	#10 – 1/2"	LANDSCAPE LIGHTS*
LANDSCAPE LIGHTS*	#10 – 1/2"	380	1** / 20	5				6	1** / 20	1,060	#10 – 1/2"	LANDSCAPE LIGHTS*
LANDSCAPE LIGHTS*	#10 – 1/2"	350	1** / 20	7				8	1** / 20	870	#10 – 1/2"	LANDSCAPE LIGHTS*
LANDSCAPE LIGHTS*	#10 – 1/2"	480	1** / 20	9				10	1** / 20	630	#10 – 1/2"	LANDSCAPE LIGHTS*
LANDSCAPE LIGHTS*	#10 – 1/2"	840	1** / 20	11				12	1** / 20	540	#10 – 1/2"	LANDSCAPE LIGHTS*
LANDSCAPE LIGHTS*	#10 – 1/2"	840	1** / 20	13				14	1** / 20	640	#10 – 1/2"	LANDSCAPE LIGHTS*
LANDSCAPE LIGHTS*	#10 – 1/2"	1,020	1** / 20	15				16	1** / 20	460	#10 – 1/2"	LANDSCAPE LIGHTS*
LANDSCAPE LIGHTS*	#10 – 1/2"	160	1** / 20	17				18	1** / 20	540	#10 – 1/2"	LANDSCAPE LIGHTS*
LANDSCAPE LIGHTS*	#10 – 1/2"	795	1** / 20	19				20	1** / 20	400	#10 – 1/2"	LANDSCAPE LIGHTS*
LANDSCAPE LIGHTS*	#10 – 1/2"	795	1** / 20	21				22	1** / 20	460	#10 – 1/2"	LANDSCAPE LIGHTS*
LANDSCAPE LIGHTS*	#10 – 1/2"	1,020	1** / 20	23				24	1** / 20	460	#10 – 1/2"	LANDSCAPE LIGHTS*
LANDSCAPE LIGHTS*	#10 – 1/2"	1,020	1** / 20	25				26	1** / 20	460	#10 – 1/2"	LANDSCAPE LIGHTS*
SPACE				27				28				SPACE
SPACE				29				30				SPACE
SPACE				31				32				SPACE
SPACE				33				34				SPACE
SPACE				35				36				SPACE
SPACE				37				38				SPACE
SPACE				39				40				SPACE
SPACE				41				42				SPACE

* CONTROLLED BY PHOTOCELL THROUGH LIGHTING CONTACTOR
** PROVIDE GFI CIRCUIT BREAKER

TOTAL LOAD: 15,810 VA
AMPS: 43.92

NEW ELECTRICAL PANEL SCHEDULE "P"

TYPE : AQ. GE
MOUNTING : SURFACE 14,000 AIC
LOCATION : POOL PUMP ROOM
MAINS : 200 AMP MAIN CIRCUIT BREAKER
BUS RATING : 225 AMP
VOLTAGE : 208Y/120V–3PHASE–4W

DESCRIPTION	WIRE & COND. SIZE	LOAD (V.A.)	POLE / TRIP	CKT. No.	A	B	C	CKT. No.	POLE / TRIP	LOAD (V.A.)	WIRE & COND. SIZE	DESCRIPTION
STREAM JET PUMP (5HP)	#10 – 1/2"	6,300	3 / 30	1				2	3	6,300	#10 – 1/2"	STREAM JET PUMP (5HP)
				3				4				
				5				6				
BADU JET PUMP (7.5HP)	#8 – 3/4"	9,108	3 / 40	7				8	3	9,108	#8 – 3/4"	BADU JET PUMP (7.5HP)
				9				10				
				11				12				
HYDROTHERAPY PUMP (1.5HP)	#12 – 1/2"	2,300	2 / 20	13				14	2 / 20	2,300	#12 – 1/2"	HYDROTHERAPY PUMP (1.5HP)
				15				16				
WATERFALL PUMP (5HP)	#10 – 1/2"	6,300	3 / 30	17				18	3	6,300	#10 – 1/2"	WATERFALL PUMP (5HP)
				19				20				
				21				22				
SPA JET PUMP (2HP)	#12 – 1/2"	2,760	2 / 20	23				24	2 / 20	2,760	#12 – 1/2"	SPA JET PUMP (2HP)
				25				26				
FILTER PUMP (1HP)	#12 – 1/2"	1,840	2 / 20	27				28	2 / 20	1,840	#12 – 1/2"	FILTER PUMP (1HP)
				29				30				
POOL LIGHTS*	#12 – 1/2"	1,200	1** / 20	31				32	1 / 20	600	#12 – 1/2"	POOL RM. LIGHTS
POOL LIGHTS*	#12 – 1/2"	1,200	1** / 20	33				34	1 / 20	500	#12 – 1/2"	POOL RM. REC.
SPACE				35				36	1 / 20	528	#12 – 1/2"	EF-3
SPACE				37				38				SPACE
SPACE				39				40				SPACE
SPACE				41				42				SPACE

* CONTROLLED BY PHOTOCELL THROUGH LIGHTING CONTACTOR
** PROVIDE GFI CIRCUIT BREAKER

TOTAL LOAD: 61,244 VA
AMPS: 170

LOAD DATA (208Y/120V – 3PH-4W SERVICE) – EAST WING

EXIST. 600AMP LIGHTING MAIN

EXISTING PANEL "EN"	26,552 VA
EXISTING PANEL "ES"	28,664 VA
EXISTING PANEL "EL"	26,948 VA
EXISTING PANEL "C"	31,952 VA
NEW PANEL "P" (POOL EQUIPMENT)	61,244 VA
NEW PANEL "EJ"	17,000 VA
TOTAL. CONN. LOAD	192,360 VA (534 A)

TOTAL BUILDING LOAD

A/C MAIN LOAD

EXIST. PANEL "CHP"	86,055 VA (239A)

LIGHTING MAIN LOAD

TOTAL. CONN. LIGHTING LOAD	192,360 VA
EXISTING OTHER LOAD	65,000 VA
TOTAL. BLDG. CONN. LOAD	343,415 VA (954 A)

LOAD DATA (208Y/120V – 3PH-4W SERVICE) – WEST WING

EXIST. PANEL "MDP" (MAIN 1 OF 5)	166,634 VA
EXIST. PANEL "CHP" (MAIN 2 OF 5)	92,412 VA
EXIST. PANEL "WC" (MAIN 3 OF 5)	51,200 VA
EXIST. PANEL "WD" (MAIN 4 OF 5)	11,000 VA
EXIST. POOL PUMPS MAIN (MAIN 5 OF 5)	12,500 VA
TOTAL. WEST WING CONN. LOAD	333,746 VA (927 A)

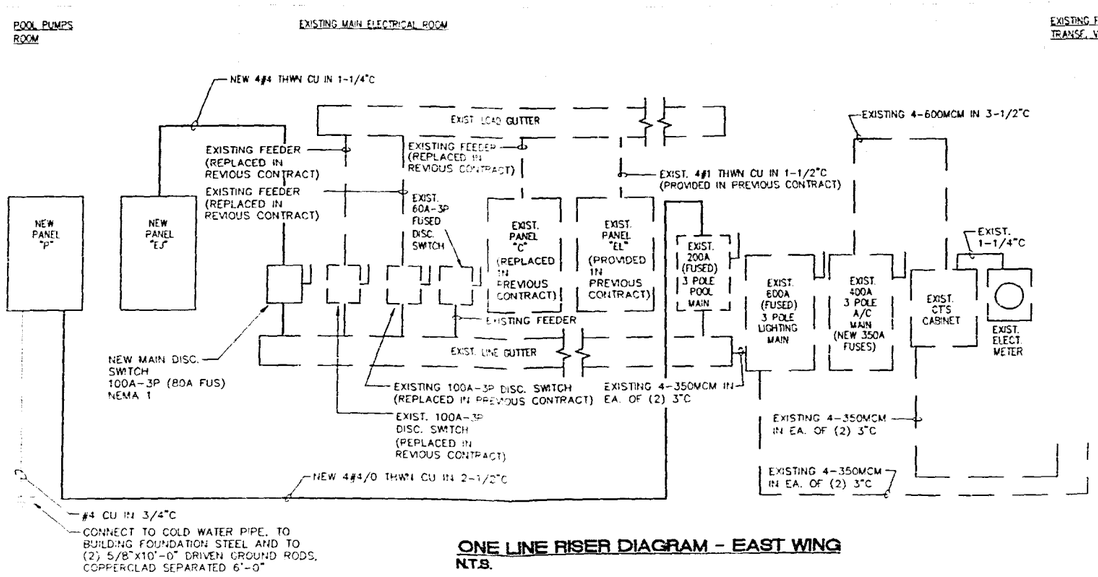

ONE LINE RISER DIAGRAM – EAST WING
N.T.S.

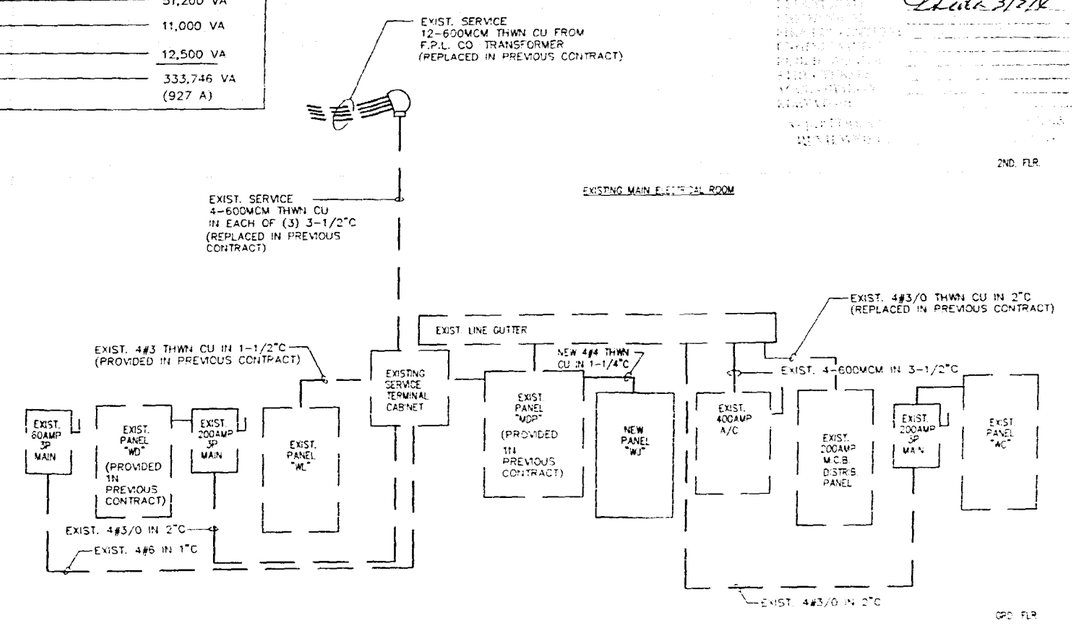

ONE LINE RISER DIAGRAM – WEST WING
N.T.S.

PROJECT No: 0304-053

uciengineering

SEAL

PROJECT ARCHITECT
ALISON SPEAR, A.I.A.
180 NE 39th St., SUITE 222, MIAMI, FL 33137
305-438-1200 fax 305-438-1221

OWNER OF DOCUMENTS NOTICE
Drawings and specifications, as instruments of service, are the exclusive property of Alison Spear, AIA whether the project for which they were prepared is executed and constructed or not. These documents are not to be reproduced in any form and they are not to be used by the project owner or other entities on any other projects or for alterations to the original project except by written authorization from the Architect.

PROJECT TITLE
LIDO SPA HOTEL
SITE LIGHTING - RENOVATION
40 ISLAND AVENUE, MIAMI BEACH, FL 33139

DRAWING TITLE
PANEL SCHEDULES AND RISERS

DRAWN BY C.P.
CHECKED BY R.J.M.

ISSUES

NO.	ISSUE	DATE

SHEET NO.
E-3SL

ELECTRICAL SYMBOLS

- GFI — DUPLEX RECEPTACLE, 20A, 120V, GROUND, TYPE, WALL MTD., WITH GROUND FAULT INTERRUPT., 18" A.F.F. (OR 48" A.F.F. ABOVE SINKS)
- DUPLEX RECEPTACLE, 20A, 120V, GROUND, TYPE, WALL MOUNTED, 18" A.F.F.
- LIGHTING SWITCH
- 1'X4' FLUORESCENT LIGHTING FIXTURE, SURFACE MOUNTED
- JUNCTION BOX
- DISCONNECT SWITCH
- ELECTRIC MOTOR
- HOME RUN TO PANEL
- CONDUIT RUNNING EXPOSED OR CONCEALED IN CEILING OR IN WALLS
- CONDUIT RUNNING UNDER GROUND

ELECTRICAL GENERAL NOTES

1. DRAWINGS ARE DIAGRAMMATIC. DO NOT SCALE DRAWINGS FOR EXACT LOCATION OF EQUIPMENT. THESE DRAWINGS ARE NOT INTENDED TO SHOW EVERY MINOR DETAIL. HOWEVER, THE CONTRACTOR SHALL FURNISH AND INSTALL ALL ITEMS REQUIRED FOR A COMPLETE AND ACCEPTABLE WORKING INSTALLATION PER CODE.
2. ALL WORK SHALL BE DONE IN ACCORDANCE WITH THE LATEST EDITION OF THE NEC AND SHALL COMPLY WITH ALL LOCAL RULES AND ORDINANCES.
3. ALL MATERIAL SHALL BE NEW AND SHALL BEAR UL LABEL WHERE APPLICABLE. THE CONTRACTOR SHALL FURNISH ALL LABOR, MATERIALS AND EQUIPMENT FOR A COMPLETE INSTALLATION. ALL MOUNTING HARDWARE AND WIRING HARDWARE SHALL BE FURNISHED BY THE CONTRACTOR.
4. CIRCUITS SHOWN ON THESE PLANS ARE SYMBOLICALLY SHOWN TO DETERMINE LOAD DATA AND EQUIPMENT SIZES. THE CONTRACTOR SHALL PHYSICALLY PROVIDE CIRCUITS AND ROUTING OF CONDUITS TO SUIT JOB CONDITIONS. THE LOADS SHALL BE BALANCED THROUGHOUT. THE CONTRACTOR SHALL ENSURE THAT NEUTRAL WIRES AND EQUIPMENT GROUND WIRES ARE INSTALLED WHERE EVER APPLICABLE.
5. THE CONTRACTOR SHALL BE RESPONSIBLE FOR COORDINATING WITH THE POWER UTILITY TO OBTAIN TEMPORARY POWER DURING CONSTRUCTION. THE CONTRACTOR SHALL IMMEDIATELY CONTACT THE POWER UTILITY TO SCHEDULE INSTALLATION OF TEMPORARY POWER SO THAT CONSTRUCTION DELAYS ARE AVOIDED.
6. THE CONTRACTOR SHALL COORDINATE WITH THE POWER UTILITY TO OBTAIN PERMANENT POWER IN ACCORDANCE WITH THESE DRAWINGS. THE CONTRACTOR SHALL IMMEDIATELY CONTACT THE POWER UTILITY TO SCHEDULE THE INSTALLATION OF PERMANENT POWER SO THAT DELAYS ARE AVOIDED. IT IS THE CONTRACTOR'S RESPONSIBILITY TO CONTACT THE POWER UTILITY EARLY ON TO IDENTIFY ANY ISSUES AFFECTING PERMANENT POWER SERVICE AND TO WORK TOWARDS RESOLVING ANY ISSUES REGARDING PERMANENT SERVICE.
7. THE CONTRACTOR SHALL COORDINATE WITH THE TELEPHONE COMPANY TO OBTAIN TELEPHONE SERVICE. THE CONTRACTOR SHALL IMMEDIATELY CONTACT THE TELEPHONE COMPANY TO SCHEDULE INSTALLATION OF TELEPHONE SERVICE. IT IS THE CONTRACTOR'S RESPONSIBILITY TO CONTACT THE TELEPHONE COMPANY EARLY ON TO IDENTIFY ANY ISSUES AFFECTING TELEPHONE SERVICE AND TO WORK TOWARDS RESOLVING ANY ISSUES DELAYING INSTALLATION.
8. IF APPLICABLE, THE CONTRACTOR SHALL COORDINATE WITH THE CABLE TV COMPANY IN THE SAME MANNER AS DESCRIBED IN PARAGRAPHS 6 AND 7 FOR POWER AND TELEPHONE UTILITIES.
9. IF ANY OR ALL OF THE UTILITIES (ELECTRICAL, TELEPHONE, CATV) ARE EXISTING, IT IS THE RESPONSIBILITY OF THE CONTRACTOR TO BECOME FAMILIAR WITH THE EXISTING SYSTEMS PRIOR TO BID. THE CONTRACTOR SHALL TRACE DOWN ALL CIRCUITS AND WIRING AND SHALL VERIFY THAT CAPACITY IS AVAILABLE FOR THE SCOPE OF THE PROJECT. THE CONTRACTOR SHALL FIELD INSPECT ALL EXISTING EQUIPMENT AND SHALL ENSURE THAT ALL RATINGS, FUSES, ENCLOSURES, ETC. ARE PROPER FOR THE SCOPE OF THE PROJECT. THE CONTRACTOR SHALL INSPECT ANY EQUIPMENT, WIRING ETC. THAT IS REUSED AND SHALL GUARANTEE THE PERFORMANCE OF SUCH EQUIPMENT FOR ONE YEAR. THE CONTRACTOR SHALL REPLACE ANY EQUIPMENT THAT IS DAMAGED OR IN POOR CONDITION. A LIST OF EQUIPMENT IDENTIFIED FOR REPLACEMENT SHALL BE PROVIDED TO THE OWNER (OR THE OWNER'S REPRESENTATIVE) AND THE ENGINEER PRIOR TO REPLACEMENT.
10. THE CONTRACTOR SHALL THOROUGHLY REVIEW THESE DRAWINGS AND SHALL VISIT AND BECOME FAMILIAR WITH THE JOB SITE AND ALL EXISTING CONDITIONS PRIOR TO BID. ANY QUESTIONS, COMMENTS, DISCREPANCIES OR PERCEIVED AMBIGUITIES SHALL BE DISCUSSED WITH THE ENGINEER PRIOR TO BID.
11. ELECTRICAL DESIGN IS BASED UPON THE BEST AVAILABLE INFORMATION. THE CONTRACTOR SHALL REVIEW NAMEPLATE DATA AND MANUFACTURER SUPPLIED LITERATURE FOR ALL PIECES OF EQUIPMENT PRIOR TO ROUGH ELECTRICAL WIRING. THE CONTRACTOR SHALL CHECK ALL EQUIPMENT FOR PROPER VOLTAGE, PHASE AND AMP RATING PRIOR TO INSTALLATION. THE CONTRACTOR SHALL CONTACT ENGINEER PRIOR TOO ANY FIELD ADJUSTMENTS.
12. ALL CONDUCTORS SHALL BE COPPER WITH THWN INSULATION.
13. ALL PANELS SHALL BE CLEARLY LABELED ON THE OUTSIDE FOR QUICK AND EASY IDENTIFICATION. ALL CIRCUITS IN ALL PANELS SHALL BE CLEARLY IDENTIFIED AND SHALL APPEAR WITH COMPLETE INFORMATION (DESCRIPTION OF CIRCUIT, BREAKER SIZE, NUMBER OF POLES AND BREAKER POSITION NUMBERS) ON THE PANEL DIRECTORIES. IN ADDITION, THE VOLTAGE, PHASE AND AMP RATING OF THE PANEL SHALL CLEARLY BE IDENTIFIED ON THE INSIDE DOOR. THE ABOVE APPLIES FOR ANY AND ALL EXISTING TO REMAIN PANEL BOARDS AND CIRCUITS.
14. PLANS SHOWING AS-BUILT CHANGES SHALL BE DELIVERED TO THE OWNERS REPRESENTATIVE UPON COMPLETION OF WORK.
15. IT IS THE RESPONSIBILITY OF THE CONTRACTOR TO MAKE THIS INSTALLATION IN COMPLIANCE WITH ALL FIRE PREVENTION CODES SUPERCEDING ALL DRAWINGS, SPECIFICATIONS AND NOTES. THE CONTRACTOR SHALL COMMUNICATE AND COORDINATE WITH THE FIRE MARSHALL AND SHALL PROVIDE ALL NECESSARY INFORMATION NEEDED TO SATISFY THAT LIFE SAFETY SYSTEMS ARE TO LOCAL CODE ACCEPTANCE.
16. ALL SERVICE ENTRANCE EQUIPMENT IS TO BE RATED AT 100,000 AIC UNLESS OTHERWISE NOTED. TO PROVIDE SERVICE ENTRANCE EQUIPMENT WITH LOWER RATINGS THE CONTRACTOR SHALL PROVIDE IN WRITING INFORMATION FROM THE POWER UTILITY VERIFYING THAT CALCULATED FAULT CURRENTS ARE AT AN ACCEPTABLE LEVEL TO ACCOMMODATE THE LOWER RATED EQUIPMENT. IF SERVICE ENTRANCE EQUIPMENT IS EXISTING, THE CONTRACTOR SHALL VERIFY THAT AIC RATINGS OF EXISTING EQUIPMENT ARE PROPER. THE CONTRACTOR SHALL COORDINATE WITH THE POWER UTILITY AND THE ENGINEER PRIOR TO BID.
17. ALL OUTSIDE EQUIPMENT, OUTLETS, LIGHTING FIXTURES, ENCLOSURES, ETC. SHALL BE WEATHERPROOF.
18. THE CONTRACTOR SHALL PROVIDE ALL REQUIRED CONNECTIONS FOR ALL OTHER TRADES.
19. THE CONTRACTOR SHALL OBTAIN ALL PERMITS FOR WORK UNDER THIS CONTRACT.
20. THE NUMBER, EXACT LOCATION AND MOUNTING HEIGHTS OF ALL OUTLETS, LIGHTS AND ELECTRICAL FIXTURES SHALL BE DETERMINED BY THE OWNER AND ARCHITECT. THE CONTRACTOR SHALL VERIFY ALL NUMBERS AND LOCATIONS WITH ARCHITECT AND OWNER PRIOR TO BID AND TO INSTALLATION.
21. THE CONTRACTOR SHALL PROVIDE ROUTING FOR ALL FLOOR MOUNTED OUTLETS AND OTHER LOADS AND CONNECTIONS NOT READILY ACCESSIBLE VIA WALL OR CEILING. THE CONTRACTOR SHALL COORDINATE WITH ARCHITECT AND OWNER TO DETERMINE THE METHOD TO SERVE SUCH AREAS (I.E. TRENCHING, CORE AND BORING, POWER POLE, ETC.) PRIOR TO BID.
22. ALL RACEWAYS AND PIPES PLACED IN OR THROUGH ANY CONCRETE SLAB SHALL BE SPACED A MINIMUM OF THREE DIAMETERS OF THE LARGEST CONDUIT OR PIPE OF ANY OTHER SERVICE.
23. ALL RACEWAYS UNDERGROUND AND/OR LARGER THAN 2 INCHES IN DIAMETER SHALL BE GALVANIZED RIGID STEEL. PVC SCH 40 WILL BE ACCEPTABLE IF APPROVED BY LOCAL REGULATIONS CONTRACTOR TO VERIFY. ALL OTHER RACEWAYS 2" AND SMALLER IN DIAMETER MAY BE EMT.
24. OUTLET BOXES SHALL BE PRESSED STEEL IN DRY LOCATIONS AND CAST ALLOY WITH THREADED HUBS IN WET OR DAMP LOCATIONS.
25. DISCONNECT SWITCHES SHALL BE HORSEPOWER RATED, HEAVY DUTY, QUICK MAKE, QUICK BREAK, IN NEMA 1 OR NEMA 3R ENCLOSURES AS REQUIRED BY EXPOSURE.
26. THE ELECTRICAL SYSTEM SHALL BE COMPLETELY AND EFFECTIVELY GROUNDED PER NEC REQUIREMENTS AND STATE AND LOCAL CODE REQUIREMENTS.
27. ALL WORK SHALL BE PERFORMED BY A LICENSED ELECTRICAL CONTRACTOR IN A FIRST CLASS WORKMANLIKE MANNER. THE COMPLETE SYSTEM SHALL BE FULLY OPERATIVE. ACCEPTANCE BY ENGINEER/ARCHITECT MUST BE A CONDITION OF THE CONTRACT.
28. IT IS NOT THE INTENTION OF THESE DRAWINGS TO ESTABLISH LIGHTING LEVELS OF ANY KIND. THE NUMBER, STYLE AND LOCATION OF LIGHTING FIXTURES ARE DETERMINED BY THE ARCHITECT AND/OR THE OWNER. THE LIGHTING FIXTURE SCHEDULE IF APPEARING ON THESE DRAWINGS IS FOR INFORMATIONAL PURPOSES AND HAS BEEN DEVELOPED BY THE ARCHITECT AND/OR OWNER. FOR DETAILED QUESTIONS REGARDING LIGHTING FIXTURES CONTACT THE ARCHITECT OR OWNER.
29. EXISTING LIGHTING FIXTURES WHEN REUSED ARE TO BE RECIRCUITED AND RECONNECTED. THE ARCHITECT AND/OR OWNER SHALL BE INFORMED OF AND SHALL APPROVE THE REUSE OF ALL REUSED LIGHT FIXTURES. ALL REUSED LIGHTING FIXTURES SHALL BE RELAMPED, CLEANED AND REPAIRED IF NECESSARY. ANY EXISTING LIGHTING FIXTURE BEYOND REPAIR SHALL BE REPLACED. ALL LIGHTING FIXTURES SHALL BE GUARANTEED FOR A PERIOD OF ONE YEAR.
30. IT IS THE CONTRACTOR'S RESPONSIBILITY TO ENSURE THAT ALL ELECTRICAL SERVICES TO MECHANICAL EQUIPMENT IS ACCOUNTED FOR PRIOR TO BID. IN ADDITION, ALL MECHANICAL EQUIPMENT SUBSTITUTIONS ARE TO BE ACCOUNTED FOR PRIOR TO BID AND SHALL BE COORDINATED ELECTRICALLY.
31. FOR HVAC EQUIPMENT THE MECHANICAL CONTRACTOR SHALL PROVIDE THE SMOKE DETECTOR, IF REQUIRED, AND THE ELECTRICAL CONTRACTOR SHALL INSTALL THE SMOKE DETECTOR.
32. THE ELECTRICAL CONTRACTOR SHALL COORDINATE WITH THE MECHANICAL CONTRACTOR FOR INSTALLATION OF ALL MECHANICAL CONTROLS.
33. IT IS THE RESPONSIBILITY OF THE CONTRACTOR TO FORWARD ANY SHOP DRAWINGS TO THE ARCHITECT/OWNER. SHOP DRAWINGS ARE NOT SOLICITED BY THE ENGINEER.
34. IT IS THE CONTRACTOR'S RESPONSIBILITY TO ENSURE THAT FIRE STOPPING MEASURES ARE PROVIDED PER LOCAL BUILDING DEPT. REQUIREMENTS. THE FIRE STOPPING MATERIAL AND ITS INSTALLATION SHALL BE UL APPROVED. ALL FIRE STOPPING MATERIAL SHALL BE NON WATER SOLUBLE.

NEW ELECTRICAL PANEL SCHEDULE "EJ"

TYPE: AQ. GE — NEMA 3R
MOUNTING: FLUSH — 14,000 AIC
LOCATION: CORRIDOR – EAST WING
MAINS: M.L.O.
BUS RATING: 125 AMP
VOLTAGE: 208Y/120V–3PHASE–4W

DESCRIPTION	WIRE & COND. SIZE	LOAD (V.A.)	POLE / TRIP	CKT No.	A	B	C	CKT No.	POLE / TRIP	LOAD (V.A.)	WIRE & COND. SIZE	DESCRIPTION
JACUZZI	#10 – 1/2"	1,000	1** 20	1**				2	1** 20	1,000	#10 – 1/2"	JACUZZI
JACUZZI	#10 – 1/2"	1,000	1** 20	3				4	1** 20	1,000	#10 – 1/2"	JACUZZI
JACUZZI	#10 – 1/2"	1,000	1** 20	5				6	1** 20	1,000	#10 – 1/2"	JACUZZI
JACUZZI	#10 – 1/2"	1,000	1** 20	7				8	1** 20	1,000	#10 – 1/2"	JACUZZI
JACUZZI	#10 – 1/2"	1,000	1** 20	9				10	1** 20	1,000	#10 – 1/2"	JACUZZI
JACUZZI	#10 – 1/2"	1,000	1** 20	11				12	1** 20	1,000	#10 – 1/2"	JACUZZI
JACUZZI	#10 – 1/2"	1,000	1** 20	13				14	1** 20	1,000	#10 – 1/2"	JACUZZI
JACUZZI	#10 – 1/2"	1,000	1** 20	15				16	1** 20	1,000	#10 – 1/2"	JACUZZI
JACUZZI	#10 – 1/2"	1,000	1** 20	17				18				SPACE
SPACE				19				20				SPACE
SPACE				21				22				SPACE
SPACE				23				24				SPACE
SPACE				25				26				SPACE
SPACE				27				28				SPACE
SPACE				29				30				SPACE

** PROVIDE GFI CIRCUIT BREAKER

TOTAL LOAD 17,000 VA
AMPS 47.22

NEW ELECTRICAL PANEL SCHEDULE "WJ"

TYPE: AQ. GE — MAINS: M.L.O.
MOUNTING: SURFACE — BUS RATING: 125 AMP
LOCATION: ELECTRICAL ROOM – WEST WING — 14,000 AIC
VOLTAGE: 208Y/120V–3PHASE–4W

DESCRIPTION	WIRE & COND. SIZE	LOAD (V.A.)	POLE / TRIP	CKT No.	A	B	C	CKT No.	POLE / TRIP	LOAD (V.A.)	WIRE & COND. SIZE	DESCRIPTION
JACUZZI	#10 – 1/2"	1,000	1** 20	1**				2	1** 20	1,000	#10 – 1/2"	JACUZZI
JACUZZI	#10 – 1/2"	1,000	1** 20	3				4	1** 20	1,000	#10 – 1/2"	JACUZZI
JACUZZI	#10 – 1/2"	1,000	1** 20	5				6	1** 20	1,000	#10 – 1/2"	JACUZZI
JACUZZI	#10 – 1/2"	1,000	1** 20	7				8	1** 20	1,000	#10 – 1/2"	JACUZZI
JACUZZI	#10 – 1/2"	1,000	1** 20	9				10	1** 20	1,000	#10 – 1/2"	JACUZZI
JACUZZI	#10 – 1/2"	1,000	1** 20	11				12	1** 20	1,000	#10 – 1/2"	JACUZZI
JACUZZI	#10 – 1/2"	1,000	1** 20	13				14	1** 20	1,000	#10 – 1/2"	JACUZZI
JACUZZI	#10 – 1/2"	1,000	1** 20	15				16				SPACE
SPACE				17				18				SPACE
SPACE				19				20				SPACE
SPACE				21				22				SPACE
SPACE				23				24				SPACE
SPACE				25				26				SPACE
SPACE				27				28				SPACE
SPACE				29				30				SPACE

** PROVIDE GFI CIRCUIT BREAKER

TOTAL LOAD 15,000 VA
AMPS 42

EXISTING ELECTRICAL PANEL SCHEDULE "MDP"

TYPE: CCB, GE — (PROVIDED IN PREVIOUS CONTRACT) — MAINS: 600 AMP M.C.B.
MOUNTING: SURFACE — BUS RATING: 600 AMP
LOCATION: ELECTRICAL ROOM — 42,000 AIC — VOLTAGE: 208Y/120V–3PHASE–4W

DESCRIPTION	WIRE & COND. SIZE	LOAD (V.A.)	POLE / TRIP	CKT No.	A	B	C	CKT No.	POLE / TRIP	LOAD (V.A.)	WIRE & COND. SIZE	DESCRIPTION
EXIST. PANEL "WA"	EXISTING	26,912	3* / 100	1				2	3* / 80	20,028	EXISTING	EXIST. PANEL "WB"
				3				4				
				5				6				
EXIST. PANEL "WF"	EXISTING	35,900	3* / 125	7				8	3* / 125	37,226	EXISTING	EXIST. PANEL "WG"
				9				10				
				11				12				
EXIST. PANEL "WJ"	EXISTING	24,715	3* / 80	13				14	3* / 80	17,193	EXISTING	EXIST. PANEL "WL"
				15				16				
				17				18				
NEW PANEL "WJ"	NEW #4 IN 1-1/4"	15,000	3** / 80	19				20				SPACE
				21				22				
				23				24				

GENERAL LIGHTING AND RECEPTACLES LOAD = 124,580 VA
DEMAND LOAD FOR GENERAL LIGHTING AND RECEPTACLES (TABLE 220-11, N.E.C.)

20,000 VA @ 50%	=	10,000 VA
80,000 VA @ 40%	=	32,000 VA
24,580 VA @ 30%	=	7,374 VA
TOTAL LOAD	=	49,374 VA
OTHER LOAD	=	117,260 VA
TOTAL CONN. LOAD	=	166,634 VA

TOTAL LOAD 166,634 VA
AMPS 463

* EXISTING CIRCUIT BREAKER TO REMAIN
** NEW CIRCUIT BREAKER

PROJECT No. 0304-053

uciengineering

PROJECT ARCHITECT
ALISON SPEAR, A.I.A.
180 NE 39th St., SUITE 222, MIAMI, FL 33137
305-438-1200 fax 305-438-1221

SEAL

OWNER OF DOCUMENTS NOTICE
Drawings and specifications, as instruments of service, are the exclusive property of Alison Spear, AIA whether the project for which they were prepared is executed and constructed or not. These documents are not to be reproduced in any form and they are not to be used by the project owner or other entities on any other projects or for alterations to the original project except by written authorization from the Architect.

PROJECT TITLE
LIDO SPA HOTEL
SITE LIGHTING - RENOVATION
40 ISLAND AVENUE, MIAMI BEACH, FL 33139

DRAWING TITLE
NOTES AND SYMBOLS

DRAWN BY C.P.
CHECKED BY R.J.M.

ISSUES

NO.	ISSUE	DATE

SHEET NO
E-4SL

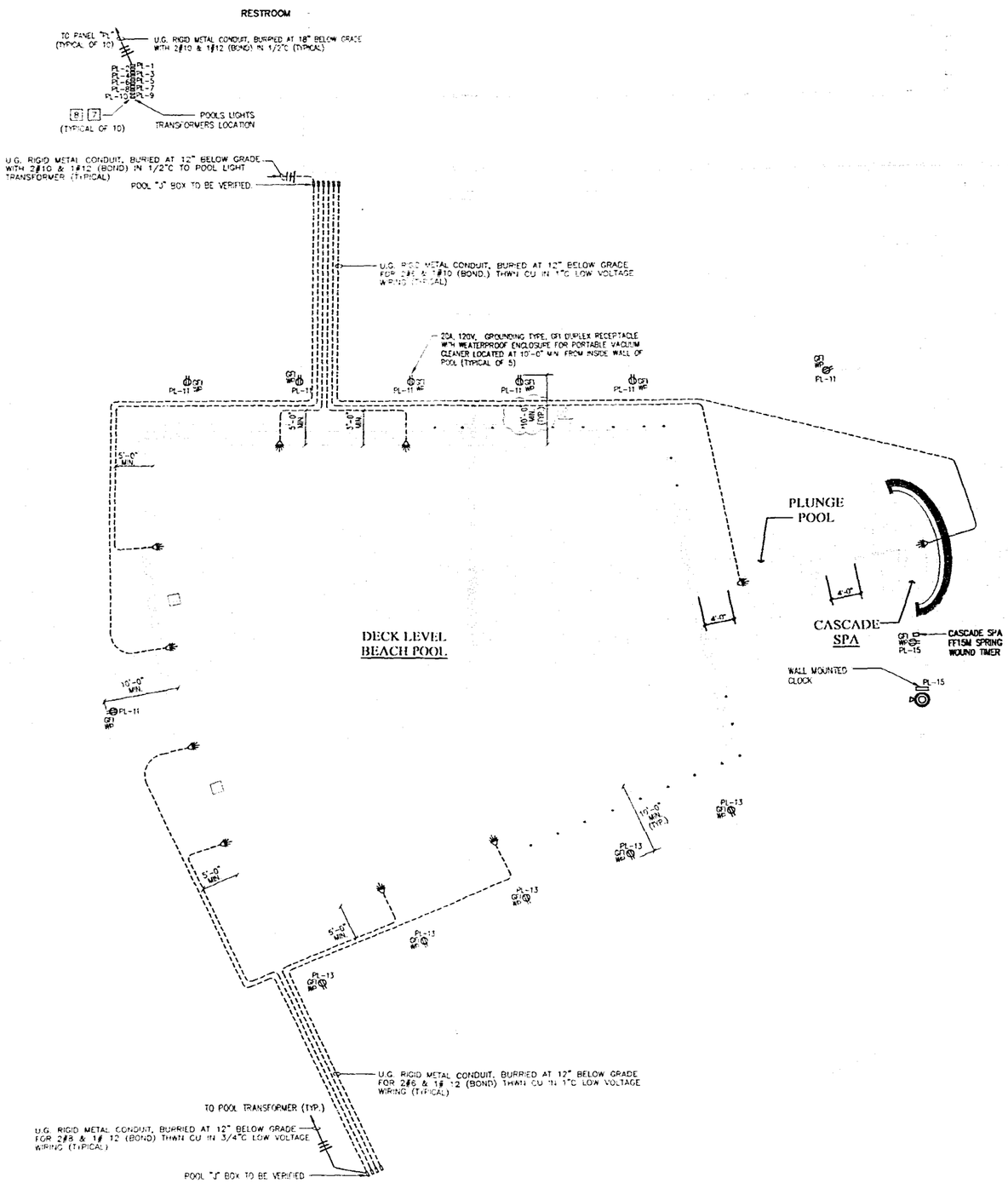

POOL FLOOR PLAN

BEACH POOL SCHEDULE OF EQUIPMENT

MARK	QTY.	ITEM	MFR	CAT. No	DESCRIPTION
6	8	POOL LIGHTS	AMERICAN PRODUCTS	#78435100	POOL UNDERWATER LIGHT WITH STAINLESS STEEL FACE RING. 300W, 12V, 100FT CORD. INCLUDE AMERICAN PRODUCTS #78210500 STAINLESS STEEL NICHE WITH 1" SIDE HUB OR EQUAL.
7	8	TRANSFORMER BOX			TRANSFORMER BOX IN WEATHER PROOF ENCLOSURE. A.J. GIAMMANCO SAF-T-VOLT DUAL WINDING TYPE.
8	8	JUNCTION BOX			JUNCTION BOX IN WEATHER PROOF NON-COPROSIVE ENCLOSURE REQUIRED.
10	6	ANCHOR SOCKET	S.R.SMITH	AS-100B	BRASS SOCKET WITH GROUNDING LUG. EACH SOCKET SHALL BE PROPERLY GROUNDED IN ACCORDANCE WITH NATIONAL ELECTRICAL CODE STANDARDS.
18	1	FILTER PUMP	PENTAIR	COMMERCIAL BRASS PUMP CHK-75	7.5 HP, WITH HAIR AND LINT POT, 292 GPM AT 60 TDH EACH, THREE PHASE, 220/440 VOLT.
28	2	HYDROTHERAPY JET PUMP	STA-RITE	P4E6FL MAX-E-GLASS II	1.5 HP, SELF PRIMING PUMP WITH A HAIR AND LINT STRAINER, 90 GPM AT 60 TDH EACH, SINGLE PHASE, 230 VOLT.
29	1	STREAM JET PUMP	PENTAIR	COMMERCIAL BRASS PUMP CHK-50	5.0 HP, SELF PRIMING PUMP, WITH 6" STRAINER 180 GPM AT 60 TDH. THREE PHASE. 220-440 VOLT.
30	2	BADU JET PUMP	PENTAIR	COMMERCIAL BRASS PUMP CHK-75	7.5 HP, WITH HAIR AND LINT POT, 400 GPM AT 60 TDH EACH, THREE PHASE, 220/440 VOLT.

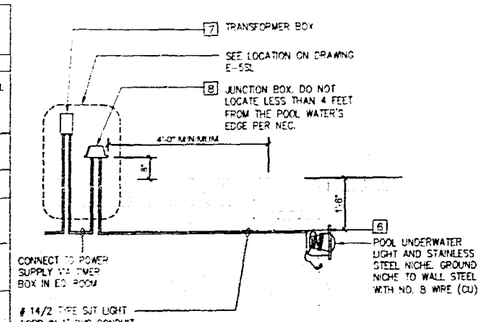

ALL ELECTRICAL WORK SHALL BE DONE BY LICENSED CONTRACTORS ONLY. ALL WORK SHALL BE DONE IN STRICT COMPLIANCE W/ ARTICLE 680 N.E.C. AND ALL LOCAL BUILDING DEPT. REQUIREMENTS. THE CONTRACTOR IS RESPONSIBLE FOR MEETING THESE CRITERIA.

POOL LIGHT DETAIL

N.T.S.

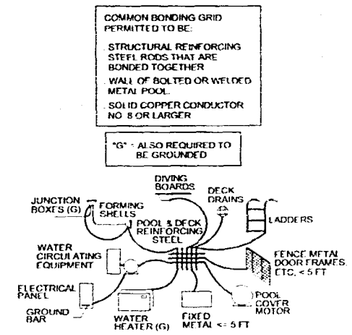

COMMON BONDING GRID DETAIL

NTS

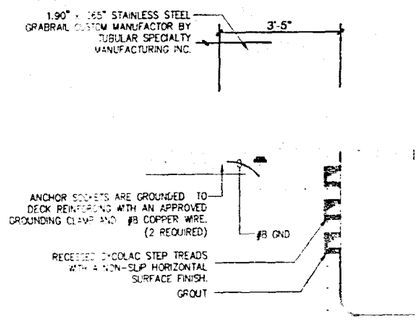

SECTION

BEACH POOL CUSTOM GRABRAIL GREOUNDING DETAIL

N.T.S.

NOTE: ALL METAL PARTS IN THE POOL AREA SHALL BE BONDED TO THE POOL REINFORCING STEEL WITH A #8 COPPER WIRE AND AN APPROVED NEC GROUNDING CLAMP. ALL BONDING SHALL COMPLY WITH THE REQUIREMENTS SET FORTH IN THE NATIONAL ELECTRICAL CODE ARTICLE 680 AND ALL LOCAL ORDINANCES.

3-1-04

3/2/04

2/9/04

PROJECT No: 0304-053

uciengineering

PROJECT ARCHITECT
ALISON SPEAR, A.I.A.
180 NE 39th St., SUITE 222, MIAMI, FL 33137
305-438-1200 fax 305-438-1221

SEAL

OWNER OF DOCUMENTS NOTICE
Drawings and specifications, as instruments of service are the exclusive property of Alison Spear, AIA whether the project for which they were prepared is executed and constructed or not. These documents are not to be reproduced in any form and they are not to be used by the project owner or other entities on any other projects or for alterations to the original project except by written authorization from the Architect

PROJECT TITLE
LIDO SPA HOTEL
SITE LIGHTING - RENOVATION
40 ISLAND AVENUE, MIAMI BEACH, FL 33139

DRAWING TITLE
NOTES AND SYMBOLS

DRAWN BY C.P.
CHECKED BY R.J.M.

ISSUES

06/26/03	ISSUE DATE
10/13/03	1 BLDG. DPT. REV.
11/19/03	2 GENERAL REV.

SHEET NO.
E-5SL

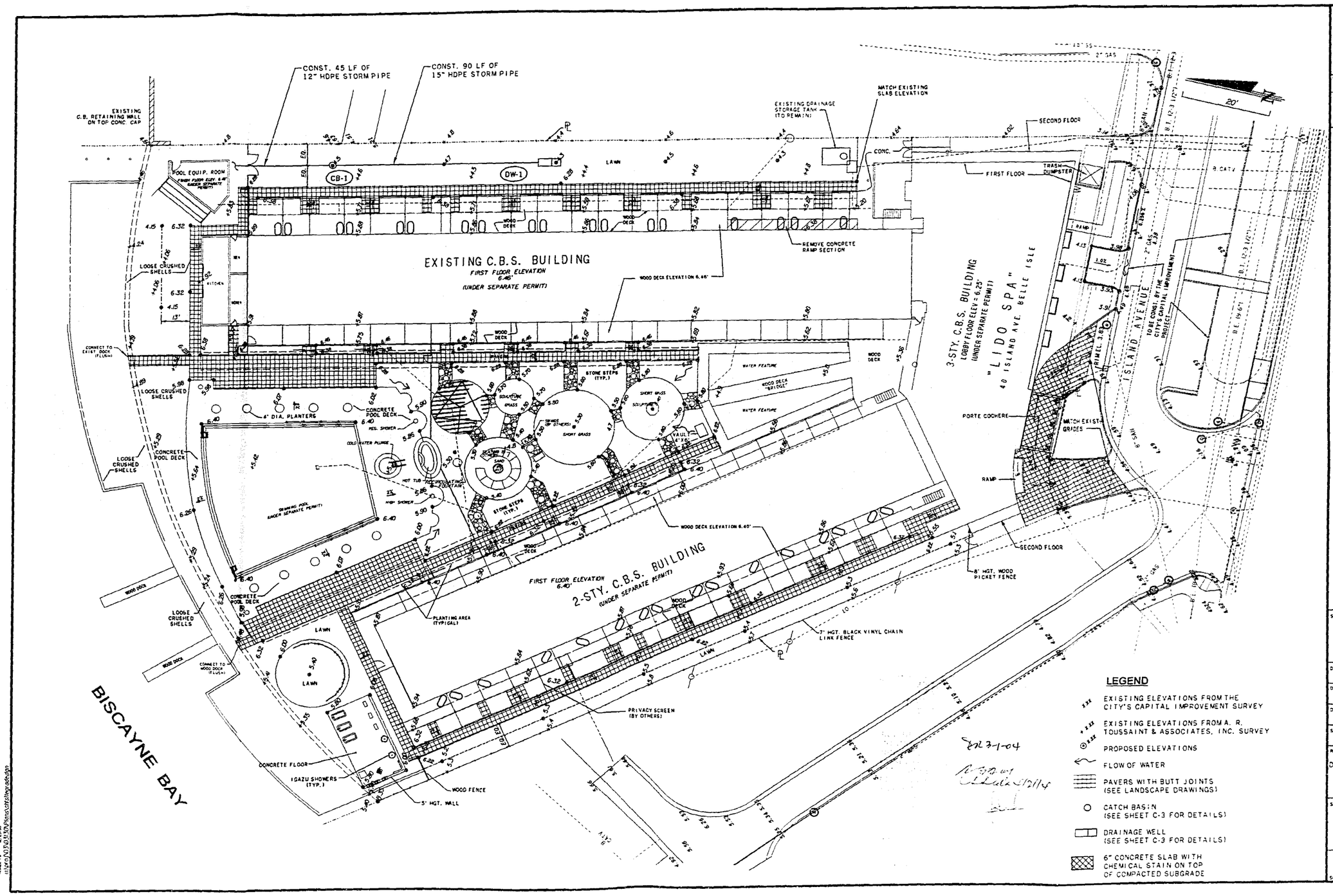

dpa
DAVID PLUMMER & ASSOCIATES INC.
TRANSPORTATION • CIVIL • ENVIRONMENTAL
CORAL GABLES FT MYERS FT LAUDERDALE
1750 PONCE DE LEON BLVD.
CORAL GABLES FL 33134
TELEPHONE (305) 447-0900
FAX (305) 444-4986

THE LIDO SPA HOTEL
40 ISLAND AVENUE
MIAMI BEACH, FLORIDA

SHEET TITLE: SITE GRADING & DRAINAGE PLAN

DATE	07/29/03
DESIGN	T.S.
DRAWN	O.L.
SCALE	1" = 20'
REVISIONS	10/15/03 ADDED DRAINAGE & REV. GRADES 12/23/03 ADDED SLOPES & GRADES
SEAL	

SHEET C-1 OF X

CATCH BASIN AND DRAINAGE WELL NOTES:

1. CONCRETE SHALL BE f'c 4000 PSI AT 28 DAYS. TYPE II CEMENT
2. WALLS TO BE CONSTRUCTED OF REINFORCED CONCRETE. CONCRETE MAY BE EITHER CAST-IN-PLACE OR PRECAST.
3. ALL REINFORCING STEEL SHALL BE NEW BARS IN ACCORDANCE WITH ASTM A-615 GRADE 60.
4. MANHOLE TOP SHALL BE SECURED TO STRUCTURE WITH A MINIMUM OF 6 NO. 5 BARS 12" LONG OR AS SHOWN IN THE SUPPLEMENTARY DETAILS FOR MANHOLES & INLETS .
5. ALL STEEL BARS HAVE 3" MINIMUM COVER UNLESS OTHERWISE SHOWN AND SHALL BE HOOKED WHERE INDICATED. HORIZONTAL STEEL SHALL BE LAPPED A MINIMUM OF 24 BAR DIAMETERS AT CORNERS. FLOOR SLABS MAY BE SECURED TO STRUCTURE WALLS BY NO. 5 DOWEL BARS (A MINIMUM OF 6 DOWELS) PUSHED INTO THE WET CONCRETE AFTER THE FLOOR SLAB IS PLACED.
6. FOR SUPPLEMENTARY DETAILS, SEE MANHOLES & INLETS DETAIL. FDOT INDEX 200, 201 & 214.
7. CATCH BASINS SHALL HAVE A MINIMUM INSIDE DIAMETER OF 42" WITH 6" THICK WALLS.
8. ALL EXISTING AND NEW INLETS AND MANHOLES SHALL BE CLEANED AND FREE OF ALL SAND, SILT AND CONSTRUCTION DEBRIS PRIOR TO PROJECT COMPLETION.
9. A CERTIFIED WELL DRILLER SHALL DEVELOP THE WELL TO A DEPTH AT WHICH THE WATER CONTAINS A MINIMUM OF 10,000 PPM OF TOTAL DISSOLVED SOLIDS AND 1500 PPM OF CHLORIDES.

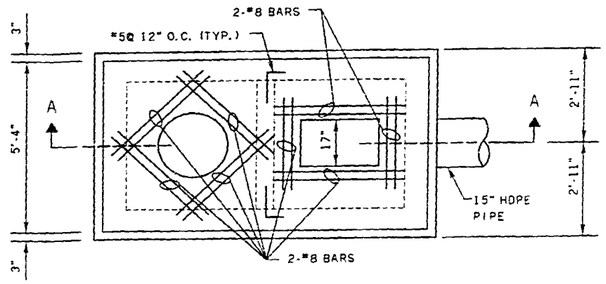

PLAN
N.T.S.

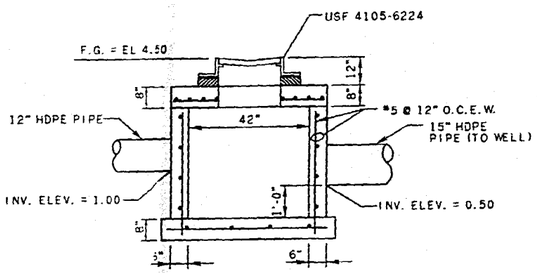

CATCH BASIN CB-1 DETAIL

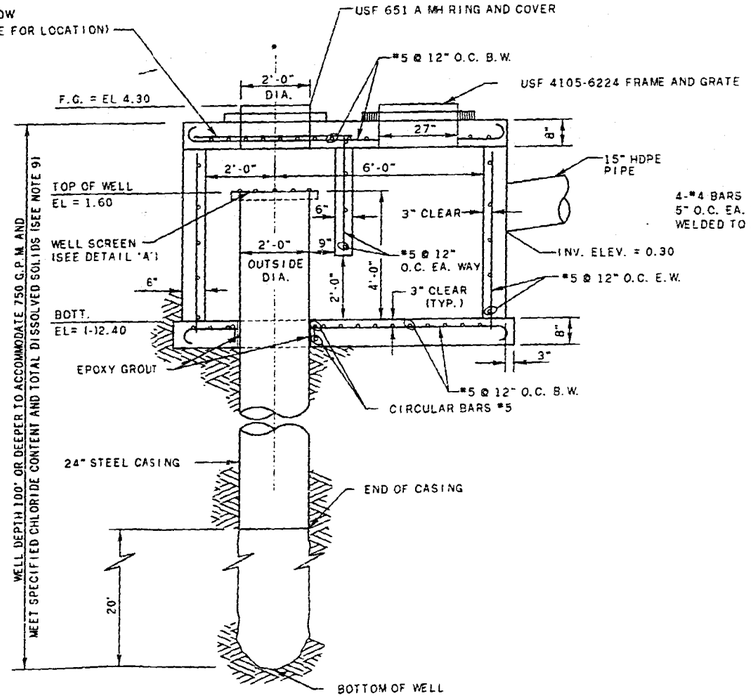

SECTION A-A

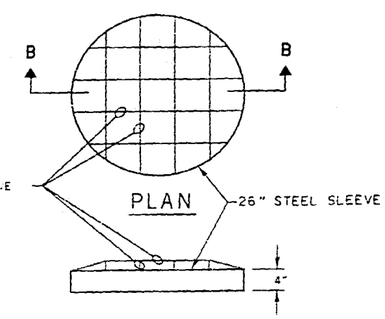

SECTION B-B

DETAIL 'A'
N.T.S.

DRAINAGE WELL DW-1 DETAIL
N.T.S.

dpa
DAVID PLUMMER & ASSOCIATES, INC.
TRANSPORTATION • CIVIL • ENVIRONMENTAL
CORAL GABLES FT. MYERS FT. LAUDERDALE
1750 PONCE DE LEON BLVD.
CORAL GABLES FL 33134
TELEPHONE (305) 447-0900
FAX (305) 444-4995

THE LIDO SPA HOTEL
40 ISLAND AVENUE
MIAMI BEACH, FLORIDA

SHEET TITLE: DRAINAGE DETAILS

DATE	10/13/03
DESIGN	T.S.
DRAWN	O.L.
SCALE	N.T.S.
REVISIONS	

SEAL: 01-16-04

SHEET C-3 OF X

BD402210

40 ISLAND AVE

tyco / Fire & Building Products

Technical Services: Tel: (800) 381-9312 / Fax: (800) 791-5500

Series TY-FRB — 5.6 K-factor Horizontal and Vertical Sidewall Sprinklers Quick Response, Standard Coverage

General Description

The Series TY-FRB, 5.6 K-Factor, Horizontal and Vertical Sidewall Sprinklers described in this data sheet are quick response - standard coverage, decorative 3 mm glass bulb type spray sprinklers designed for use in light and ordinary hazard, commercial occupancies such as banks, hotels, shopping malls, etc. They are designed for installation along a wall or the side of a beam and just beneath a smooth ceiling. Sidewall sprinklers are commonly used instead of pendent or upright sprinklers due to aesthetics or building construction considerations, where piping across the ceiling is not desirable.

The recessed version of the Series TY-FRB Horizontal Sidewall Sprinkler is intended for use in areas with a finished wall. It uses a two-piece Style 10 Recessed Escutcheon with 1/2 inch (12,7 mm) of recessed adjustment or up to 3/4 inch (19,1 mm) of total adjustment from the flush sidewall position, or a two-piece Style 20 Recessed Escutcheon with 1/4 inch (6,4 mm) of recessed adjustment or up to 1/2 inch (12,7 mm) of total adjustment from the flush sidewall position. The adjustment provided by the Recessed Escutcheon reduces the accuracy to which the fixed pipe nipples to the sprinklers must be cut.

Corrosion resistant coatings, where applicable, are utilized to extend the life of copper alloy sprinklers beyond that which would otherwise be obtained when exposed to corrosive atmospheres. Although corrosion resistant coated sprinklers have passed the standard corrosion tests of the applicable approval agencies, the testing is not representative of all possible corrosive atmospheres. Consequently, it is recommended that the end user be consulted with respect to the suitability of these coatings for any given corrosive environment. The effects of ambient temperature, concentration of chemicals, and gas/chemical velocity, should be considered, as a minimum, along with the corrosive nature of the chemical to which the sprinklers will be exposed.

IMPORTANT

Always refer to Technical Data Sheet TFP700 for the "INSTALLER WARNING" that provides cautions with respect to handling and installation of sprinkler systems and components. Improper handling and installation can permanently damage a sprinkler system or its components and cause the sprinkler to fail to operate in a fire situation or cause it to operate prematurely.

WARNINGS

The Series TY-FRB Sprinklers described herein must be installed and maintained in compliance with this document, as well as with the applicable standards of the National Fire Protection Association, in addition to the standards of any other authorities having jurisdiction. ***Failure to do so may impair the performance of these devices.***

The owner is responsible for maintaining their fire protection system and devices in proper operating condition. The installing contractor or sprinkler manufacturer should be contacted with any questions.

Model/Sprinkler Identification Numbers

TY3331 - Horizontal
TY3431 - Vertical

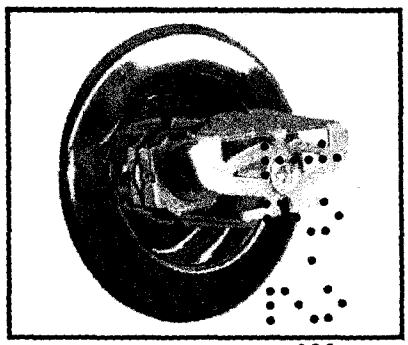

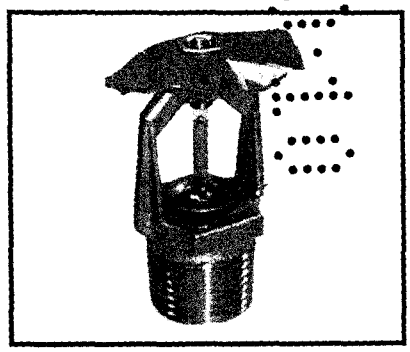

Technical Data

Approvals
UL and C-UL Listed.
FM, LPCB, and NYC Approved.
(Refer to Table A for complete approval information including corrosion resistant status.)

Maximum Working Pressure
Refer to Table B.

Discharge Coefficient
K = 5.6 GPM/psi$^{1/2}$ (80,6 LPM/bar$^{1/2}$)

Temperature Ratings
Refer to Table A.

Finishes
Sprinkler: Refer to Table A.
Recessed Escutcheon: White Coated, Chrome Plated, or Brass Plated.

K	TYPE	TEMP.	BULB LIQUID	SPRINKLER FINISH (See Note 11) NATURAL BRASS	CHROME PLATED	WHITE*** POLYESTER	LEAD COATED
5.6 1/2" NPT	HORIZ. SIDEWALL (TY3331)	135°F/57°C	Orange	1, 2, 3, 4, 9, 10		1, 2, 3, 9	1, 2, 3, 9
		155°F/68°C	Red				
		175°F/79°C	Yellow				
		200°F/93°C	Green				
		286°F/141°C	Blue				
	RECESSED HORIZ. SIDEWALL (TY3331)* Figure 3	135°F/57°C	Orange	1, 2, 4, 9, 10		1, 2, 9	N/A
		155°F/68°C	Red				
		175°F/79°C	Yellow				
		200°F/93°C	Green				
	RECESSED HORIZ. SIDEWALL (TY3331)** Figure 4	135°F/57°C	Orange	1, 2, 3, 4, 9			N/A
		155°F/68°C	Red				
		175°F/79°C	Yellow				
		200°F/93°C	Green				
5.6 1/2" NPT	VERTICAL SIDEWALL (TY3431) Installed Pendent or Upright	135°F/57°C	Orange	5, 6, 7, 8, 9			5, 6, 7, 9
		155°F/68°C	Red				
		175°F/79°C	Yellow				
		200°F/93°C	Green				
		286°F/141°C	Blue				

NOTES:

1. Listed by Underwriters Laboratories, Inc. (UL) as Quick Response Sprinklers for use in Light and Ordinary Hazard Occupancies at a 4 to 12 inch (100 to 300 mm) top of deflector to ceiling distance.
2. Listed by Underwriters Laboratories Inc. for use in Canada (C-UL) as Quick Response Sprinklers for use in Light and Ordinary Hazard Occupancies at a 4 to 12 inch (100 to 300 mm) top of deflector to ceiling distance.
3. Approved by Factory Mutual Research Corporation (FM) as Quick Response Sprinklers for use in Light Hazard Occupancies at a 4 to 12 inch (100 to 300 mm) top of deflector to ceiling distance.
4. Approved by the Loss Prevention Certification Board (LPCB Ref. No. 007a/04) at a 4 to 6 inch (100 to 150 mm) top of deflector to ceiling distance. The LPC does not rate the thermal sensitivity of horizontal sidewall sprinklers.
5. Listed by Underwriters Laboratories, Inc. as Quick Response Sprinklers for use in Light and Ordinary Hazard Occupancies.
6. Listed by Underwriters Laboratories for use in Canada (C-UL) as Quick Response Sprinklers for use in Light and Ordinary Hazard Occupancies.
7. Approved by Factory Mutual Research Corporation (FM) as Quick Response Sprinklers for use in Light Hazard Occupancies.
8. Approved by the Loss Prevention Certification Board (LPCB Ref. No. 094a/06 & 007a/04) as Quick Response Sprinklers.
9. Approved by the City of New York under MEA 354-01-E.
10. Approved by the Loss Prevention Certification Board (LPCB Ref. No. 094a/06) at a 4 to 6 inch (100 to 150 mm) top of deflector to ceiling distance. The LPC does not rate the thermal sensitivity of horizontal sidewall sprinklers.
11. Where Polyester Coated and Lead Coated Sprinklers are noted to be UL and C-UL Listed, the sprinklers are UL and C-UL Listed as Corrosion Resistant Sprinklers. Where Lead Coated Sprinklers are noted to be FM Approved, the sprinklers are FM Approved as Corrosion Resistant Sprinklers.

* Installed with Style 10 (1/2" NPT) 3/4" Total Adjustment Recessed Escutcheon.
** Installed with Style 20 (1/2" NPT) 1/2" Total Adjustment Recessed Escutcheon.
*** Frame and deflector only. Listings and approvals apply to color (Special Order).

TABLE A
LABORATORY LISTINGS AND APPROVALS

Physical Characteristics

Frame . . . . . Bronze
Button . . . . . Brass/Copper
Sealing Assembly . . . . . Beryllium Nickel w/Teflon†
Bulb . . . . . Glass
Compression Screw . . . . . Bronze
HSW Deflector . . . . . Bronze
VSW Deflector . . . . . Copper

Patents

U.S.A. 5,810,263

Operation

The glass Bulb contains a fluid which expands when exposed to heat. When the rated temperature is reached, the fluid expands sufficiently to shatter the glass Bulb, allowing the sprinkler to activate and water to flow.

† DuPont Registered Trademark

K	TYPE	SPRINKLER FINISH			
		NATURAL BRASS	CHROME PLATED	WHITE POLYESTER	LEAD COATED
5.6 1/2" NPT	HORIZONTAL SIDEWALL (TY3331)	250 PSI (17,2 BAR) OR 175 PSI (12,1 BAR) (SEE NOTE 1)			175 PSI (12,1 BAR)
	RECESSED HORIZ. SIDEWALL (TY3331)				N/A
	VERTICAL SIDEWALL (TY3431)	175 PSI (12,1 BAR)			

NOTES:
1. The maximum working pressure of 250 psi (17,2 bar) only applies to the Listing by Underwriters Laboratories, Inc. (UL); the Listing by Underwriters Laboratories, Inc. for use in Canada (C-UL); and, the Approval by the City of New York.

TABLE B, MAXIMUM WORKING PRESSURE

Design Criteria

The Series TY-FRB Horizontal and Vertical Sidewall Sprinklers are intended for fire protection systems designed in accordance with the standard installation rules recognized by the applicable Listing or Approval agency (e.g., UL Listing is based on the requirements of NFPA 13, and FM Approval is based on the requirements of FM's Loss Prevention Data Sheets). Only the Style 10 or 20 Recessed Escutcheon, as applicable, is to be used for recessed horizontal installations.

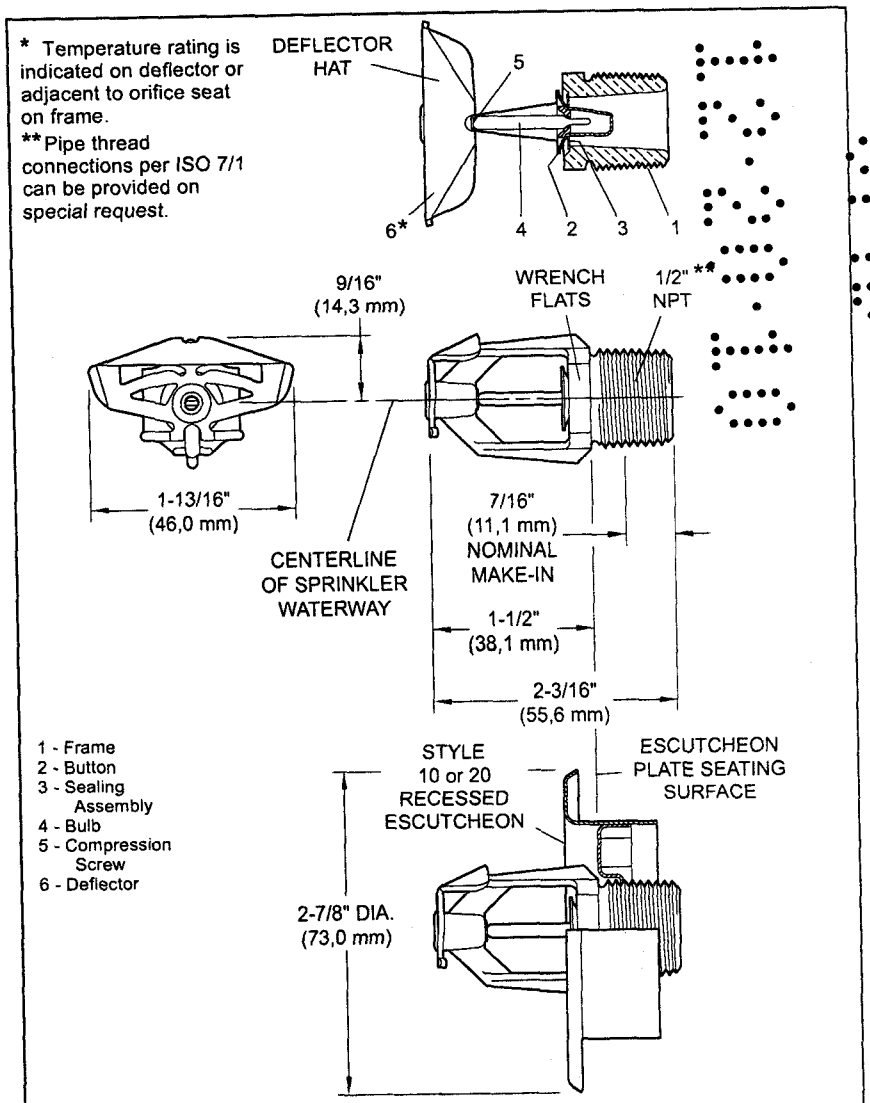

FIGURE 1
5.6 K-FACTOR QUICK RESPONSE
SERIES TY-FRB HORIZONTAL SIDEWALL (TY3331) SPRINKLERS

Installation

The Series TY-FRB Sprinklers must be installed in accordance with the following instructions:

NOTES

Do not install any bulb type sprinkler if the bulb is cracked or there is a loss of liquid from the bulb. With the sprinkler held horizontally, a small air bubble should be present. The diameter of the air bubble is approximately 1/16 inch (1,6 mm) for the 135°F/57°C to 3/32 inch (2,4 mm) for the 286°F/141°C temperature ratings.

A leak tight 1/2 inch NPT sprinkler joint should be obtained with a torque of 7 to 14 ft.lbs. (9,5 to 19,0 Nm). A maximum of 21 ft. lbs. (28,5 Nm) of torque may be used to install sprinklers with 1/2 NPT connections. Higher levels of torque may distort the sprinkler and cause leakage or impairment of the sprinkler.

Do not attempt to make-up for insufficient adjustment in the escutcheon plate by under- or over-tightening the sprinkler. Readjust the position of the sprinkler fitting to suit.

The **Series TY-FRB Horizontal and Vertical Sidewall Sprinklers** must be installed in accordance with the following instructions.

Step 1. Horizontal sidewall sprinklers are to be installed in the horizontal position with their centerline of waterway perpendicular to the back wall and parallel to the ceiling. The word "TOP" on the Deflector is to face towards the ceiling.

Vertical sidewall sprinklers are to be installed in the pendent or upright position with the arrow on the Deflector pointing away from the wall.

Step 2. With pipe thread sealant applied to the pipe threads, hand tighten the sprinkler into the sprinkler fitting.

Step 3. Tighten the sprinkler into the sprinkler fitting using only the W-Type 6 Sprinkler Wrench (Ref. Figure 5), With reference to Figure 1 or 2, the W-Type 6 Sprinkler Wrench is to be applied to the wrench flats.

The **Series TY-FRB Recessed Horizontal Sidewall Sprinklers** must be installed in accordance with the following instructions.

Step A. Recessed horizontal sidewall sprinklers are to be installed in the horizontal position with their centerline of waterway perpendicular to the back wall and parallel to the ceiling. The word "TOP" on the Deflector is to face towards the ceiling.

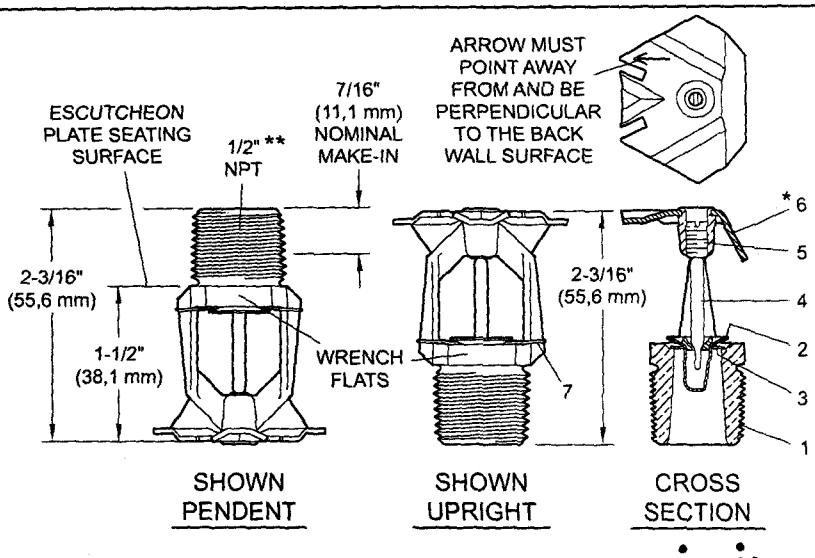

1 - Frame
2 - Button
3 - Sealing Assembly
4 - Bulb
5 - Compression Screw
6 - Deflector
7- Ejection Spring

* Temperature rating is indicated on deflector or adjacent to orifice seat on frame.
**Pipe thread connections per ISO 7/1 can be provided on special request.

FIGURE 2
5.6 K-FACTOR QUICK RESPONSE
SERIES TY-FRB VERTICAL SIDEWALL (TY3431) SPRINKLERS

Step B. After installing the Style 10 or 20 Mounting Plate over the sprinkler threads, hand tighten the sprinkler into the sprinkler fitting.

Step C. Tighten the sprinkler into the sprinkler fitting using only the W-Type 7 Recessed Sprinkler Wrench (Ref. Figure 6). With reference to Figure 1, the W-Type 7 Recessed Sprinkler Wrench is to be applied to the sprinkler wrench flats.

Step D. After the ceiling has been installed or the finish coat has been applied, slide on the Style 10 or 20 Closure over the Series TY-FRB Sprinkler and push the Closure over the Mounting Plate until its flange comes in contact with the ceiling

Care and Maintenance

The Series TY-BFR Sprinklers must be maintained and serviced in accordance with the following instructions:

NOTES

Before closing a fire protection system main control valve for maintenance work on the fire protection system that it controls, permission to shut down the affected fire protection system must be obtained from the proper authorities and all personnel who may be affected by this action must be notified.

The owner must assure that the sprinklers are not used for hanging of any objects; otherwise, non-operation in the event of a fire or inadvertent operation may result.

Absence of an escutcheon, which is used to cover a clearance hole, may delay the time to sprinkler operation in a fire situation.

Sprinklers that are found to be leaking or exhibiting visible signs of corrosion

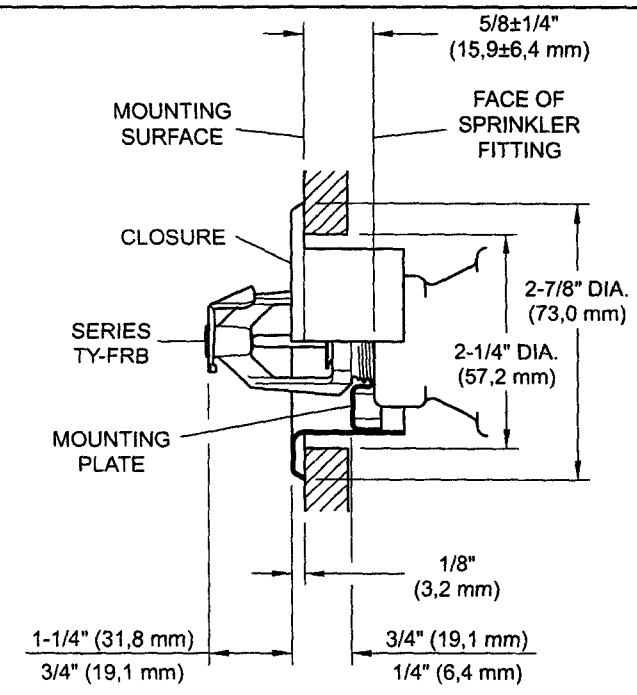

FIGURE 3
SERIES TY-FRB RECESSED HORIZONTAL SIDEWALL SPRINKLER WITH TWO-PIECE 3/4 INCH TOTAL ADJUSTMENT STYLE 10 RECESSED ESCUTCHEON

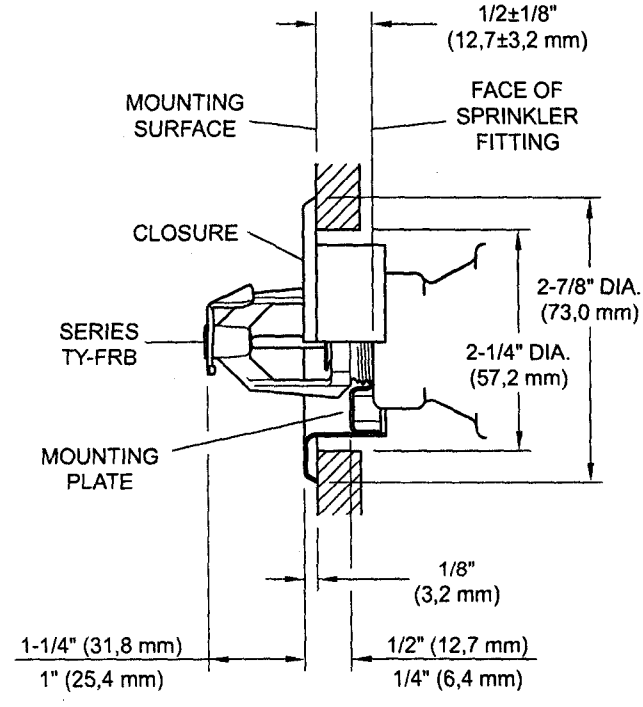

FIGURE 4
SERIES TY-FRB RECESSED HORIZONTAL SIDEWALL SPRINKLER WITH TWO-PIECE 1/2 INCH TOTAL ADJUSTMENT STYLE 20 RECESSED ESCUTCHEON

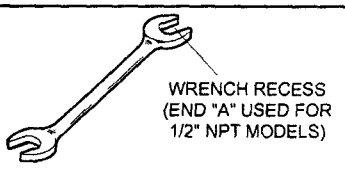

FIGURE 5
W-TYPE 6 SPRINKLER WRENCH

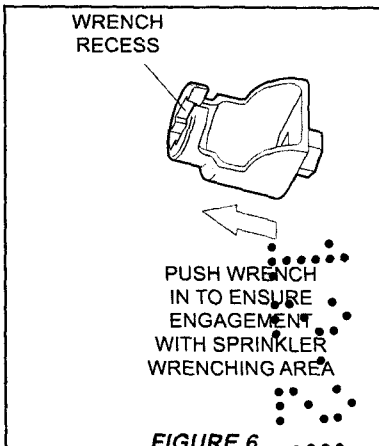

FIGURE 6
W-TYPE 7 RECESSED SPRINKLER WRENCH

must be replaced.

Automatic sprinklers must never be painted, plated, coated or otherwise altered after leaving the factory. Modified sprinklers must be replaced. Sprinklers that have been exposed to corrosive products of combustion, but have not operated, should be replaced if they cannot be completely cleaned by wiping the sprinkler with a cloth or by brushing it with a soft bristle brush.

Care must be exercised to avoid damage to the sprinklers - before, during, and after installation. Sprinklers damaged by dropping, striking, wrench twist/slippage, or the like, must be replaced. Also, replace any sprinkler that has a cracked bulb or that has lost liquid from its bulb. (Ref. Installation Section).

Frequent visual inspections are recommended to be initially performed for corrosion resistant coated sprinklers, after the installation has been completed, to verify the integrity of the corrosion resistant coating. Thereafter, annual inspections per NFPA 25 should suffice; however, instead of inspecting from the floor level, a random sampling of close-up visual inspections should be made, so as to better determine the exact sprinkler condition and the long term integrity of the

P/N 57 — XXX — X — XXX

		MODEL/SIN
378	HORIZONTAL SIDEWALL	TY3331
375	VERTICAL SIDEWALL	TY3431

	SPRINKLER
1	NATURAL BRASS
4	WHITE POLYESTER
3	WHITE RAL9010)*
9	CHROME PLATED
7	LEAD COATED

	TEMPERATURE RATING
135	135°F/57°C
155	155°F/68°C
175	175°F/79°C
200	200°F/93°C
286	286°F/141°C

* Eastern Hemisphere sales only.

TABLE C
PART NUMBER SELECTION
SERIES TY-FRB HORIZONTAL AND VERTICAL SIDEWALL SPRINKLERS

corrosion resistant coating, as it may be affected by the corrosive conditions present.

The owner is responsible for the inspection, testing, and maintenance of their fire protection system and devices in compliance with this document, as well as with the applicable standards of the National Fire Protection Association (e.g., NFPA 25), in addition to the standards of any other authorities having jurisdiction. The installing contractor or sprinkler manufacturer should be contacted relative to any questions.

It is recommended that automatic sprinkler systems be inspected, tested, and maintained by a qualified Inspection Service in accordance with local requirements and/or national codes.

Limited Warranty

Products manufactured by Tyco Fire & Building Products (TFBP) are warranted solely to the original Buyer for ten (10) years against defects in material and workmanship when paid for and properly installed and maintained under normal use and service. This warranty will expire ten (10) years from date of shipment by TFBP. No warranty is given for products or components manufactured by companies not affiliated by ownership with TFBP or for products and components which have been subject to misuse, improper installation, corrosion, or which have not been installed, maintained, modified or repaired in accordance with applicable Standards of the National Fire Protection Association, and/or the standards of any other Authorities Having Jurisdiction. Materials found by TFBP to be defective shall be either repaired or replaced, at TFBP's sole option. TFBP neither assumes, nor authorizes any person to assume for it, any other obligation in connection with the sale of products or parts of products. TFBP shall not be responsible for sprinkler system design errors or inaccurate or incomplete information supplied by Buyer or Buyer's representatives.

In no event shall TFBP be liable, in contract, tort, strict liability or under any other legal theory, for incidental, indirect, special or consequential damages, including but not limited to labor charges, regardless of whether TFBP was informed about the possibility of such damages, and in no event shall TFBP's liability exceed an amount equal to the sales price.

The foregoing warranty is made in lieu of any and all other warranties, express or implied, including warranties of merchantability and fitness for a particular purpose.

This limited warranty sets forth the exclusive remedy for claims based on failure of or defect in products, materials or components, whether the claim is made in contract, tort, strict liability or any other legal theory.

This warranty will apply to the full extent permitted by law. The invalidity, in whole or part, of any portion of this warranty will not affect the remainder.

Ordering Procedure

When placing an order, indicate the full product name. Refer to the Price List for complete listing of Part Numbers.

Contact your local distributor for availability.

Sprinkler Assemblies with NPT Thread Connections:
Specify: (Specify Model/SIN), Quick Response, (specify K-factor), (specify temperature rating), Series TY-FRB (specify Horizontal Sidewall or Vertical Sidewall) Sprinkler with (specify type of finish or coating), P/N (specify from Table C).

Recessed Escutcheon:
Specify: Style (10 or 20) Recessed Escutcheon with (specify*) finish, P/N (specify*).

* Refer to Technical Data Sheet TFP770.

Sprinkler Wrench:
Specify: W-Type 6 Sprinkler Wrench, P/N 56-000-6-387.

Specify: W-Type 7 Sprinkler Wrench, P/N 56-850-4-001.

tyco Fire Suppression & Building Products

Technical Services 800-381-9312 | +1-401-781-8220
www.tyco-fire.com

Series TY-FRB — 2.8, 4.2, 5.6, and 8.0 K-Factor Upright, Pendent, and Recessed Pendent Sprinklers Quick Response, Standard Coverage

General Description

The TYCO Series TY-FRB, 2.8, 4.2, 5.6, and 8.0 K-factor, Upright and Pendent Sprinklers described in this data sheet are quick response, standard coverage, decorative 3 mm glass bulb-type spray sprinklers designed for use in light or ordinary hazard, commercial occupancies such as banks, hotels, and shopping malls.

The recessed version of the Series TY-FRB Pendent Sprinkler, where applicable, is intended for use in areas with a finished ceiling. This recessed pendent sprinkler uses one of the following,

- A two-piece Style 10 (1/2 inch NPT) or Style 40 (3/4 inch NPT) Recessed Escutcheon with 1/2 inch (12,7 mm) of recessed adjustment or up to 3/4 inch (19,1 mm) of total adjustment from the flush pendent position, or a
- A two-piece Style 20 (1/2 inch NPT) or Style 30 (3/4 inch NPT) Recessed Escutcheon with 1/4 inch (6,4 mm) of recessed adjustment or up to 1/2 inch (12,7 mm) of total adjustment from the flush pendent position.

The adjustment provided by the Recessed Escutcheon reduces the accuracy to which the fixed pipe drops to the sprinklers must be cut.

IMPORTANT

Always refer to Technical Data Sheet TFP700 for the "INSTALLER WARNING" that provides cautions with respect to handling and installation of sprinkler systems and components. Improper handling and installation can permanently damage a sprinkler system or its components and cause the sprinkler to fail to operate in a fire situation or cause it to operate prematurely.

Corrosion-resistant coatings, where applicable, are utilized to extend the life of copper alloy sprinklers beyond that which would otherwise be obtained when exposed to corrosive atmospheres. Although corrosion-resistant coated sprinklers have passed the standard corrosion tests of the applicable approval agencies, the testing is not representative of all possible corrosive atmospheres. Consequently, it is recommended that the end user be consulted with respect to the suitability of these coatings for any given corrosive environment. The effects of ambient temperature, concentration of chemicals, and gas/chemical velocity, should be considered, as a minimum, along with the corrosive nature of the chemical to which the sprinklers will be exposed.

An intermediate level of the Series TY-FRB Pendent Sprinklers is detailed in Technical Data Sheet TFP356, and Sprinkler Guards are detailed in Technical Data Sheet TFP780.

NOTICE

The Series TY-FRB Concealed Pendent Sprinklers described herein must be installed and maintained in compliance with this document and with the applicable standards of the National Fire Protection Association, in addition to the standards of any authorities having jurisdiction. Failure to do so may impair the performance of these devices.

Owners are responsible for maintaining their fire protection system and devices in proper operating condition. The installing contractor or sprinkler manufacturer should be contacted with any questions.

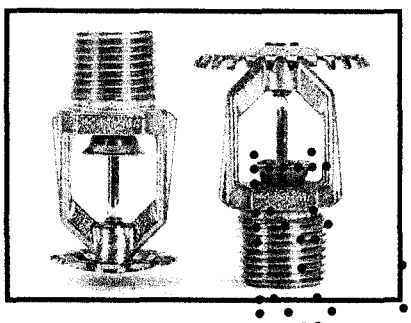

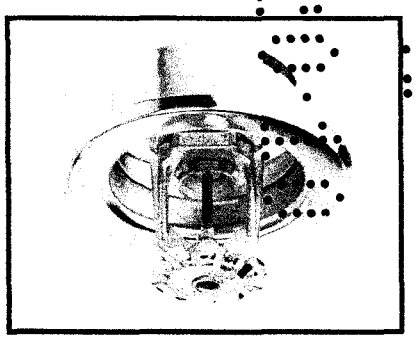

Model/Sprinkler Identification Number (SIN)

TY1131:	Upright	2.8K, 1/2" NPT
TY1231:	Pendent	2.8K, 1/2" NPT
TY2131:	Upright	4.2K, 1/2" NPT
TY2231:	Pendent	4.2K, 1/2" NPT
TY3131:	Upright	5.6K, 1/2" NPT
TY3231:	Pendent	5.6K, 1/2" NPT
TY4131:	Upright	8.0K, 3/4" NPT
TY4231:	Pendent	8.0K, 3/4" NPT
TY4831:	Upright	8.0K, 1/2" NPT
TY4931:	Pendent	8.0K, 1/2" NPT

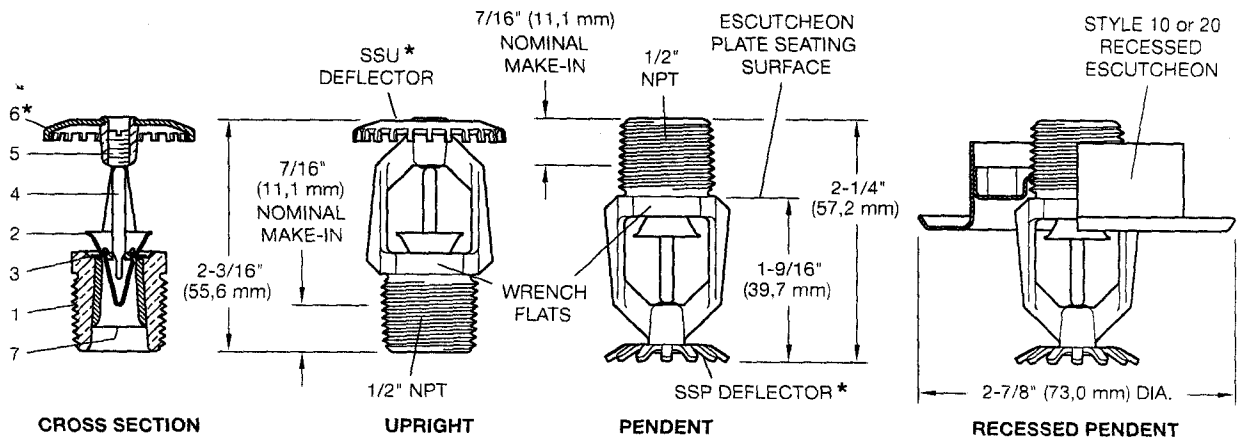

1 - Frame
2 - Button
3 - Sealing Assembly
4 - Bulb
5 - Compression Screw
6 - Deflector
7 - Bushing

* Temperature rating is indicated on deflector or adjacent to orifice seat on frame.

FIGURE 1
QUICK RESPONSE SERIES TY-FRB UPRIGHT (TY1131) AND PENDENT (TY1231) SPRINKLERS
2.8 K-FACTOR, 1/2 INCH NPT

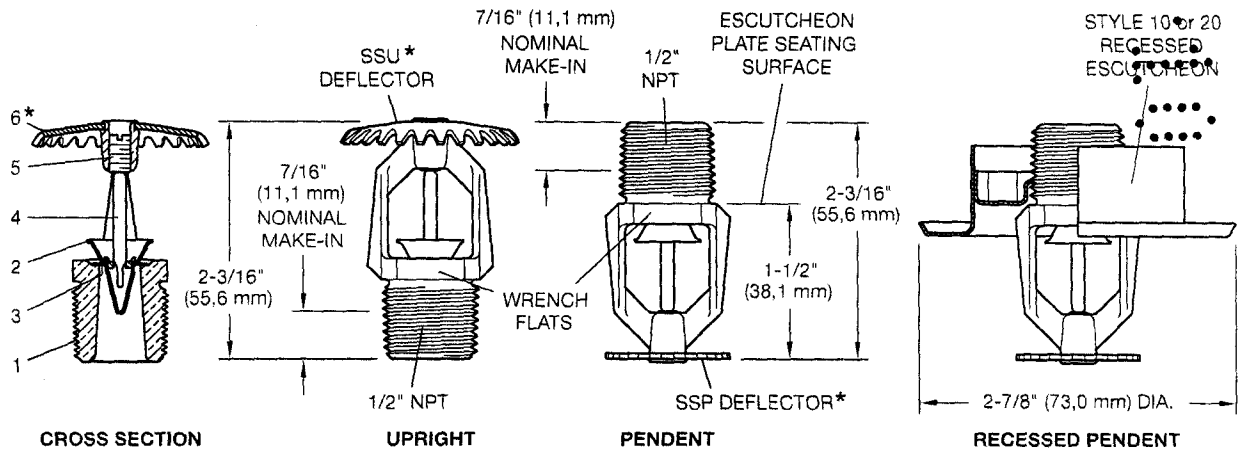

1 - Frame
2 - Button
3 - Sealing Assembly
4 - Bulb
5 - Compression Screw
6 - Deflector
7 - Bushing

* Temperature rating is indicated on deflector or adjacent to orifice seat on frame.

FIGURE 2
QUICK RESPONSE SERIES TY-FRB UPRIGHT (TY2131) AND PENDENT (TY2231) SPRINKLERS
4.2 K-FACTOR, 1/2 INCH NPT

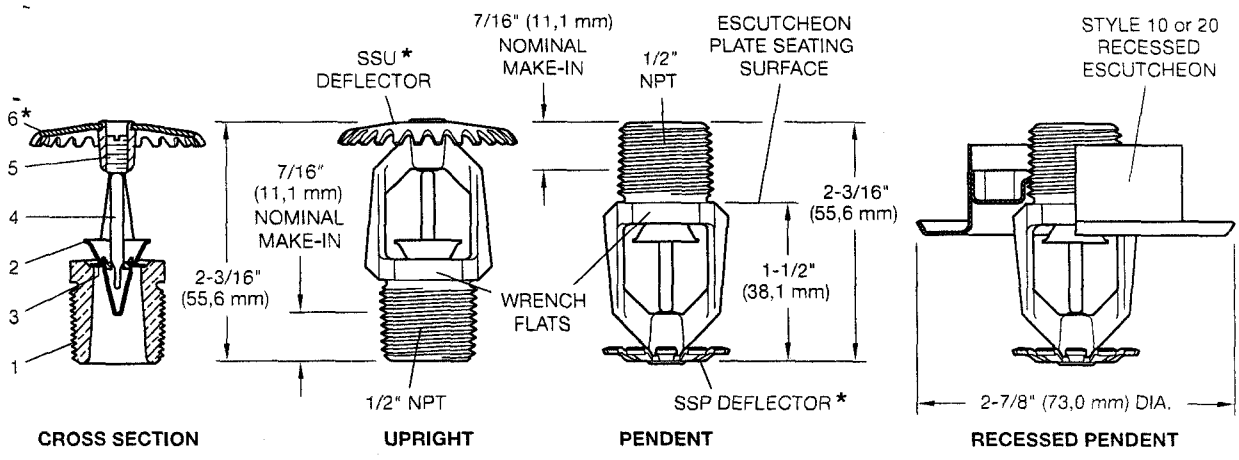

1 - Frame
2 - Button
3 - Sealing Assembly
4 - Bulb
5 - Compression Screw
6 - Deflector
7 - Bushing

* Temperature rating is indicated on deflector or adjacent to orifice seat on frame.

FIGURE 3
QUICK RESPONSE SERIES TY-FRB UPRIGHT (TY3131) AND PENDENT (TY3231) SPRINKLERS
5.6 K-FACTOR, 1/2 INCH NPT

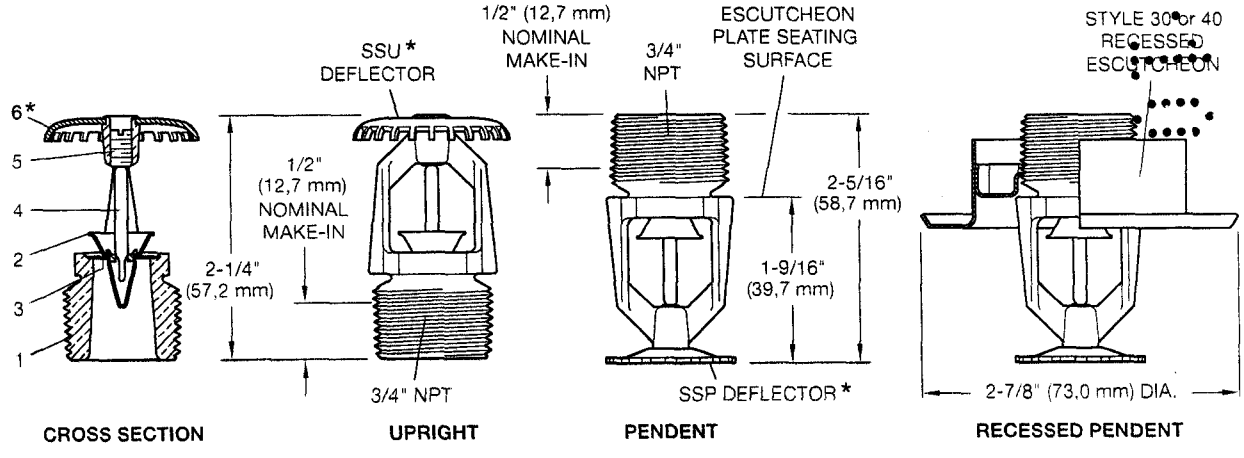

1 - Frame
2 - Button
3 - Sealing Assembly
4 - Bulb
5 - Compression Screw
6 - Deflector
7 - Bushing

* Temperature rating is indicated on deflector or adjacent to orifice seat on frame.

FIGURE 4
QUICK RESPONSE SERIES TY-FRB UPRIGHT (TY4131) AND PENDENT (TY4231) SPRINKLERS
8.0 K-FACTOR, 3/4 INCH NPT

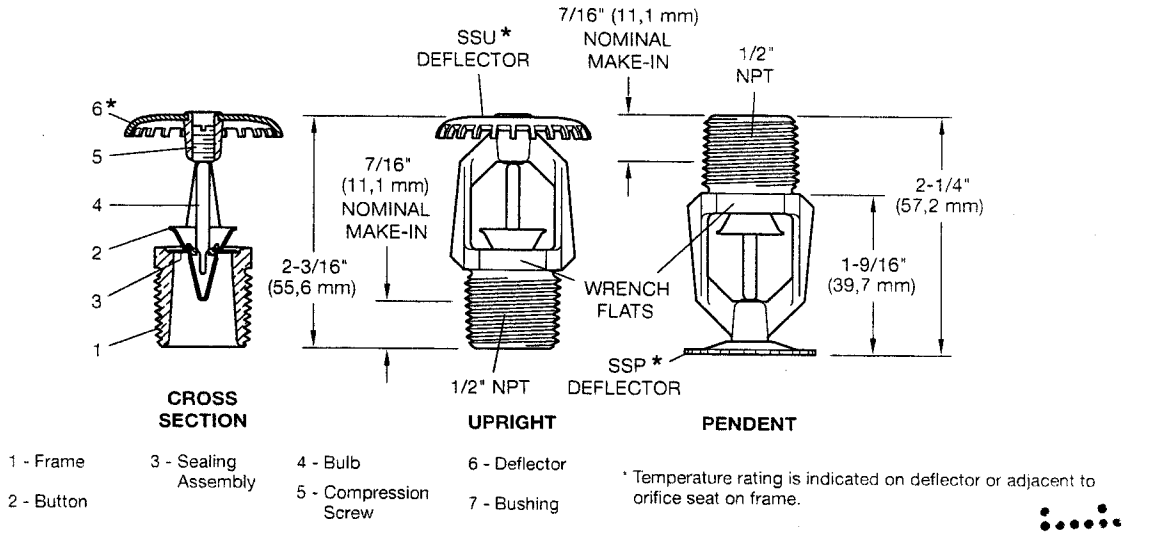

1 - Frame
2 - Button
3 - Sealing Assembly
4 - Bulb
5 - Compression Screw
6 - Deflector
7 - Bushing

* Temperature rating is indicated on deflector or adjacent to orifice seat on frame.

FIGURE 5
QUICK RESPONSE SERIES TY-FRB UPRIGHT (TY4831) AND PENDENT (TY4931) SPRINKLERS
8.0 K-FACTOR, 1/2 INCH NPT

Technical Data

Approvals
UL and C-UL Listed
FM, LPCB, and NYC Approved
Refer to Table A and B for complete approval information including corrosion-resistant status.

Maximum Working Pressure
Refer to Table C.

Discharge Coefficient

K=2.8 GPM/psi$^{1/2}$	(40,3 LPM/bar$^{1/2}$)
K=4.2 GPM/psi$^{1/2}$	(60,5 LPM/bar$^{1/2}$)
K=5.6 GPM/psi$^{1/2}$	(80,6 LPM/bar$^{1/2}$)
K=8.0 GPM/psi$^{1/2}$	(115,2 LPM/bar$^{1/2}$)

Temperature Rating
Refer to Table A and B.

Finishes
Sprinkler: Refer to Table A and B.
Recessed Escutcheon: White Coated, Chrome Plated, or Brass Plated.

Physical Characteristics

Frame	Bronze
Button	Brass/Copper
Sealing Assembly	Beryllium Nickel w/Teflon†
Bulb	Glass
Compression Screw	Bronze
Deflector	Copper/Bronze
Bushing (K=2.8)	Bronze

† Registered Trademark of Dupont

Operation

The glass Bulb contains a fluid that expands when exposed to heat. When the rated temperature is reached, the fluid expands sufficiently to shatter the glass Bulb, allowing the sprinkler to activate and water to flow.

Design Criteria

The TYCO Series TY-FRB Pendent and Upright Sprinklers are intended for fire protection systems designed in accordance with the standard installation rules recognized by the applicable Listing or Approval agency (such as, UL Listing is based on the requirements of NFPA 13, and FM Approval is based on the requirements of FM's Loss Prevention Data Sheets). Only the Style 10, 20, 30, or 40 Recessed Escutcheon, as applicable, is to be used for recessed pendent installations.

Installation

The TYCO Series TY-FRB Sprinklers must be installed in accordance with the following instructions.

NOTICE

Do not install any bulb-type sprinkler if the bulb is cracked or there is a loss of liquid from the bulb. With the sprinkler held horizontally, a small air bubble should be present. The diameter of the air bubble is approximately 1/16 inch (1,6 mm) for the 135°F/57°C and 3/32 inch (2,4 mm) for the 286°F/141°C temperature ratings.

Obtain a leak-tight 1/2 inch NPT sprinkler joint by applying a minimum to maximum torque of 7 to 14 ft.lbs. (9,5 to 19,0 Nm). Higher levels of torque can distort the sprinkler Inlet with consequent leakage or impairment of the sprinkler.

Do not attempt to compensate for insufficient adjustment in the Escutcheon Plate by under- or over-tightening the sprinkler. Re-adjust the position of the sprinkler fitting to suit.

The Series TY-FRB Pendent and Upright Sprinklers must be installed in accordance with the following instructions.

1. Install Pendent sprinklers in the pendent position. Install upright sprinklers in the upright position.
2. With pipe-thread sealant applied to the pipe threads, hand-tighten the sprinkler into the sprinkler fitting.
3. Tighten the sprinkler into the sprinkler fitting using only the W-Type 6 Sprinkler Wrench (Figure 14). With reference to Figures 1 through 5, apply the W-Type 6 Sprinkler Wrench to the sprinkler wrench flats.

K FACTOR	TYPE	TEMPERATURE	BULB LIQUID COLOR	SPRINKLER FINISH (See Note 5) NATURAL BRASS	CHROME PLATED	WHITE*** POLYESTER
2.8 1/2" NPT	PENDENT (TY1231) and UPRIGHT (TY1131)	135°F/57°C	Orange	1, 2, 3, 4		
		155°F/68°C	Red			
		175°F/79°C	Yellow			
		200°F/93°C	Green			
		286°F/141°C	Blue			
	RECESSED PENDENT (TY1231)* Figure 6	135°F/57°C	Orange	1, 2, 4		
		155°F/68°C	Red			
		175°F/79°C	Yellow			
		200°F/93°C	Green			
	RECESSED PENDENT (TY1231)** Figure 7	135°F/57°C	Orange			
		155°F/68°C	Red			
		175°F/79°C	Yellow			
		200°F/93°C	Green			
4.2 1/2" NPT	PENDENT (TY2231) and UPRIGHT (TY2131)	135°F/57°C	Orange	1, 2		
		155°F/68°C	Red			
		175°F/79°C	Yellow			
		200°F/93°C	Green			
		286°F/141°C	Blue			
	RECESSED PENDENT (TY2231)* Figure 8	135°F/57°C	Orange			
		155°F/68°C	Red			
		175°F/79°C	Yellow			
		200°F/93°C	Green			
	RECESSED PENDENT (TY2231)** Figure 9	135°F/57°C	Orange			
		155°F/68°C	Red			
		175°F/79°C	Yellow			
		200°F/93°C	Green			

NOTES:

1. Listed by Underwriters Laboratories, Inc., (UL) as Quick Response Sprinklers.
2. Listed by Underwriters Laboratories, Inc., for use in Canada (C-UL) as Quick Response Sprinklers.
3. Approved by Factory Mutual Research Corporation (FM) as Quick Response Sprinklers.
4. Approved by the City of New York under MEA 354-01-E.
5. Where Polyester Coated Sprinklers are noted to be UL and C-UL Listed, the sprinklers are UL and C-UL Listed as Corrosion-Resistant Sprinklers.

* Installed with Style 10 (1/2" NPT) or Style 40 (3/4" NPT) 3/4" Total Adjustment Recessed Escutcheon, as applicable.

** Installed with Style 20 (1/2" NPT) or Style 30 (3/4" NPT) 1/2" Total Adjustment Recessed Escutcheon, as applicable.

*** Frame and Deflector only. Listings and approvals apply to color (Special Order).

N/A: Not Available

TABLE A
LABORATORY LISTINGS AND APPROVALS FOR
2.8 AND 4.2 K-FACTOR SPRINKLERS

K FACTOR	TYPE	TEMPERATURE	BULB LIQUID COLOR	SPRINKLER FINISH (See Note 8) NATURAL BRASS	CHROME PLATED	WHITE*** POLYESTER	LEAD COATED
5.6 1/2" NPT	PENDENT (TY3231) and UPRIGHT (TY3131)	135°F/57°C	Orange	1, 2, 3, 4, 5, 6, 7			1, 2, 3, 5
		155°F/68°C	Red				
		175°F/79°C	Yellow				
		200°F/93°C	Green				
		286°F/141°C	Blue				
	RECESSED PENDENT (TY3231)* Figure 10	135°F/57°C	Orange	1, 2, 4, 5			N/A
		155°F/68°C	Red				
		175°F/79°C	Yellow				
		200°F/93°C	Green				
		286°F/141°C	Blue				
	RECESSED PENDENT (TY3231)** Figure 11	135°F/57°C	Orange	1, 2, 3, 4, 5			N/A
		155°F/68°C	Red				
		175°F/79°C	Yellow				
		200°F/93°C	Green				
		286°F/141°C	Blue				
8.0 3/4" NPT	PENDENT (TY4231) and UPRIGHT (TY4131)	135°F/57°C	Orange	1, 2, 3, 4, 5, 6, 7			1, 2, 5
		155°F/68°C	Red				
		175°F/79°C	Yellow				
		200°F/93°C	Green				
		286°F/141°C	Blue				
	RECESSED PENDENT (TY4231)* Figure 12	135°F/57°C	Orange	1, 2, 5			N/A
		155°F/68°C	Red				
		175°F/79°C	Yellow				
		200°F/93°C	Green				
		286°F/141°C	Blue				
	RECESSED PENDENT (TY4231)** Figure 13	135°F/57°C	Orange	1, 2, 3, 5			N/A
		155°F/68°C	Red				
		175°F/79°C	Yellow				
		200°F/93°C	Green				
		286°F/141°C	Blue				
8.0 1/2" NPT	PENDENT (TY4931) and UPRIGHT (TY4831)	135°F/57°C	Orange	1, 2, 4, 5, 6			1, 2, 5
		155°F/68°C	Red				
		175°F/79°C	Yellow				
		200°F/93°C	Green				
		286°F/141°C	Blue				

NOTES:

1. Listed by Underwriters Laboratories, Inc., (UL) as Quick Response Sprinklers.
2. Listed by Underwriters Laboratories, Inc., for use in Canada (C-UL) as Quick Response Sprinklers.
3. Approved by Factory Mutual Research Corporation (FM) as Quick Response Sprinklers.
4. Approved by the Loss Prevention Certification Board (LPCB Ref. No. 007k/04) as Quick Response Sprinklers. However, LPCB does not rate the thermal sensitivity of recessed sprinklers.
5. Approved by the City of New York under MEA 354-01-E.
6. VdS Approved (For details, contact Tyco Fire Suppression & Building Products, Enschede, Netherlands. Tel. 31-53-428-4444/Fax 31-53-428-3377.)
7. Approved by the Loss Prevention Certification Board (LPCB Ref. No. 094a/06) as Quick Response Sprinklers.
8. Where Polyester Coated and Lead-Coated Sprinklers are noted to be UL and C-UL Listed, the sprinklers are UL and C-UL Listed as Corrosion-Resistant Sprinklers. Where Lead-Coated Sprinklers are noted to be FM Approved, the sprinklers are FM Approved as a Corrosion-Resistant Sprinklers.

* Installed with Style 10 (1/2" NPT) or Style 40 (3/4" NPT) 3/4" Total Adjustment Recessed Escutcheon, as applicable.

** Installed with Style 20 (1/2" NPT) or Style 30 (3/4" NPT) 1/2" Total Adjustment Recessed Escutcheon, as applicable.

*** Frame and Deflector only. Listings and approvals apply to color (Special Order).

N/A: Not Available

TABLE B
LABORATORY LISTINGS AND APPROVALS FOR
5.6 AND 8.0 K-FACTOR SPRINKLERS

K FACTOR	TYPE	SPRINKLER FINISH: NATURAL BRASS	CHROME PLATED	WHITE POLYESTER	LEAD COATED
2.8 1/2" NPT	PENDENT (TY1231) and UPRIGHT (TY1131)	75 PSI (12,1 BAR)			N/A
	RECESSED PENDENT (TY1231)				
4.2 1/2" NPT	PENDENT (TY2231) and UPRIGHT (TY2131)	175 PSI (12,1 BAR)			N/A
	RECESSED PENDENT (TY2231)				
5.6 1/2" NPT	PENDENT (TY3231) and UPRIGHT (TY3131)	250 PSI (17,2 BAR) OR 175 PSI (12,1 BAR) (SEE NOTE 1)			175 PSI (12,1 BAR)
	RECESSED PENDENT (TY3231)				N/A
8.0 3/4" NPT	PENDENT (TY4231) and UPRIGHT (TY4131)	175 PSI (12,1 BAR)			175 PSI (12,1 BAR)
	RECESSED PENDENT (TY4231)				N/A
8.0 1/2" NPT	PENDENT (TY4931) and UPRIGHT (TY4831)	175 PSI (12,1 BAR)			175 PSI (12,1 BAR)

NOTES:
1. The maximum working pressure of 250 psi (17,2 bar) only applies to the Listing by Underwriters Laboratories Inc. (UL); the Listing by Underwriters Laboratories, Inc. for use in Canada (C-UL); and, the Approval by the City of New York.

TABLE C
MAXIMUM WORKING PRESSURE

The Series TY-FRB Recessed Pendent Sprinklers must be installed in accordance with the following instructions.

1. After installing the Style 10, 20, 30, or 40 Mounting Plate, as applicable, over the sprinkler threads and with pipe-thread sealant applied to the pipe threads, hand-tighten the sprinkler into the sprinkler fitting.
2. Tighten the sprinkler into the sprinkler fitting using only the W-Type 7 Recessed Sprinkler Wrench (Figure 15). With reference to Figures 1 to 4, apply the W-Type 7 Recessed Sprinkler Wrench to the sprinkler wrench flats.
3. After ceiling installation and finishing, slide on the Style 10, 20, 30, or 40 Closure over the Series TY-FRB Sprinkler and push the Closure over the Mounting Plate until its flange comes in contact with the ceiling.

Care and Maintenance

The TYCO Series TY-FRB must be maintained and serviced in accordance with the following instructions.

NOTICE

Before closing a fire protection system main control valve for maintenance work on the fire protection system that it controls, obtain permission to shut down the affected fire protection systems from the proper authorities and notify all personnel who may be affected by this action.

Absence of the outer piece of an escutcheon, which is used to cover a clearance hole, can delay sprinkler operation in a fire situation.

Exercise care to avoid damage to sprinklers before, during, and after installation. Never paint, plate, coat, or otherwise alter automatic sprinklers after they leave the factory.

Replace sprinklers that:

- were modified or over-heated.
- were damaged by dropping, striking, wrench twisting, wrench slippage, or the like.
- are leaking or exhibiting visible signs of corrosion.
- were exposed to corrosive products of combustion but have not operated, if you cannot easily remove combustion by-products with a cloth.
- have a cracked bulb or have lost liquid from the bulb. Refer to the Installation section in this data sheet.

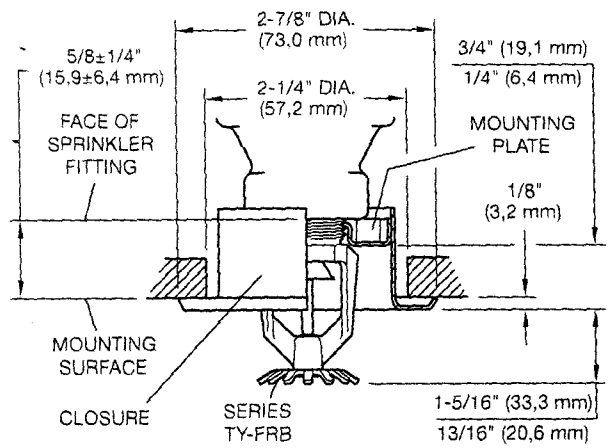

FIGURE 6
SERIES TY-FRB RECESSED PENDENT
WITH TWO-PIECE 3/4 INCH TOTAL ADJUSTMENT
STYLE 10 RECESSED ESCUTCHEON
2.8 K-FACTOR, 1/2 INCH NPT

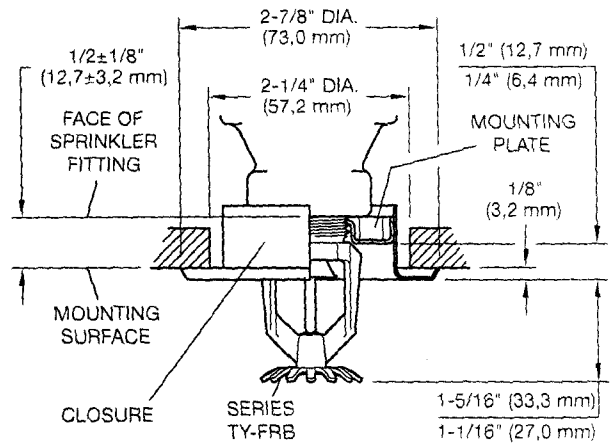

FIGURE 7
SERIES TY-FRB RECESSED PENDENT
WITH TWO-PIECE 1/2 INCH TOTAL ADJUSTMENT
STYLE 20 RECESSED ESCUTCHEON
2.8 K-FACTOR, 1/2 INCH NPT

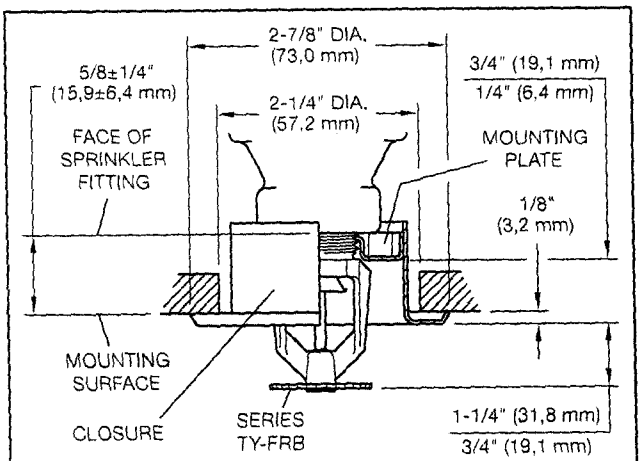

FIGURE 8
SERIES TY-FRB RECESSED PENDENT
WITH TWO-PIECE 3/4 INCH TOTAL ADJUSTMENT
STYLE 10 RECESSED ESCUTCHEON
4.2 K-FACTOR, 1/2 INCH NPT

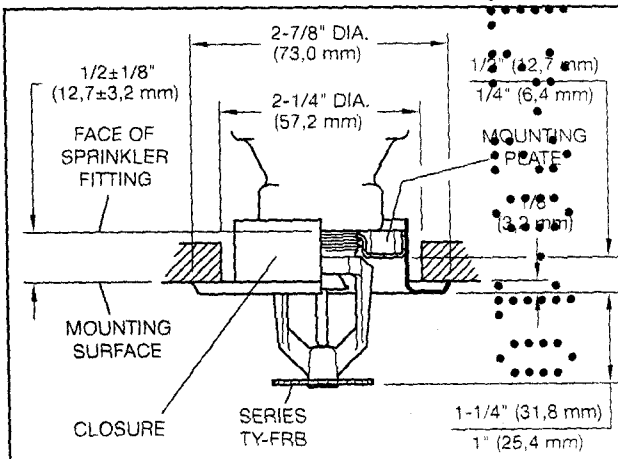

FIGURE 9
SERIES TY-FRB RECESSED PENDENT
WITH TWO-PIECE 1/2 INCH TOTAL ADJUSTMENT
STYLE 20 RECESSED ESCUTCHEON
4.2 K-FACTOR, 1/2 INCH NPT

Initial and frequent visual inspections of random samples are recommended for corrosion-resistant sprinklers to verify the integrity of the corrosion-resistant material of construction. Thereafter, annual inspections per NFPA 25 should suffice.

Inspections of corrosion-resistant sprinklers are recommended at close range, instead of from the floor level per NFPA. Inspection at close range can better determine the exact sprinkler condition and the long-term integrity of the corrosion-resistant material, which can be affected by the corrosive conditions present.

Responsibility lies with the owner for the inspection, testing, and maintenance of their fire protection system and devices in compliance with this document, as well as with the applicable standards of the National Fire Protection Association (for example, NFPA 25), in addition to the standards of any other authorities having jurisdiction. Contact the installing contractor or sprinkler manufacturer regarding any questions.

Automatic sprinkler systems are recommended to be inspected, tested, and maintained by a qualified Inspection Service in accordance with local requirements and/or national codes.

Care must be exercised to avoid damage to the sprinklers -before, during, and after installation. Sprinklers damaged by dropping, striking, wrench twist/slippage, or the like, must be replaced. Also, replace any sprinkler that has a cracked bulb or that has lost liquid from its bulb. (Ref. Installation Section).

Initial and frequent visual inspections of random samples are recommended for corrosion-resistant sprinklers to verify the integrity of the corrosion-resistant material of construction. Thereafter, annual inspections per NFPA 25 should suffice.

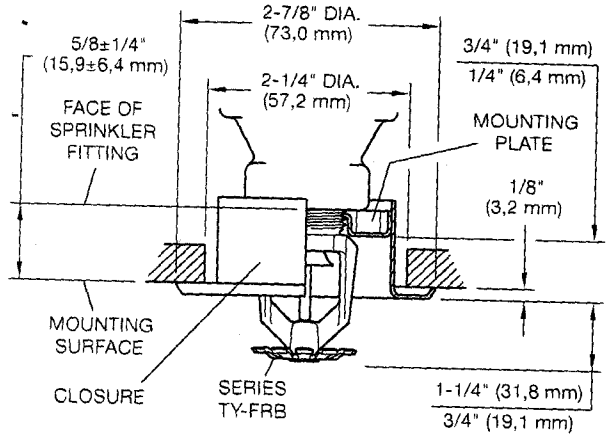

FIGURE 10
SERIES TY-FRB RECESSED PENDENT
WITH TWO-PIECE 3/4 INCH TOTAL ADJUSTMENT
STYLE 10 RECESSED ESCUTCHEON
5.6 K-FACTOR, 1/2 INCH NPT

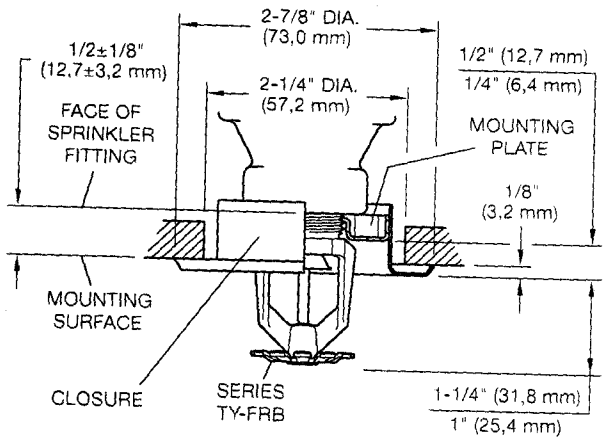

FIGURE 11
SERIES TY-FRB RECESSED PENDENT
WITH TWO-PIECE 1/2 INCH TOTAL ADJUSTMENT
STYLE 20 RECESSED ESCUTCHEON
5.6 K-FACTOR, 1/2 INCH NPT

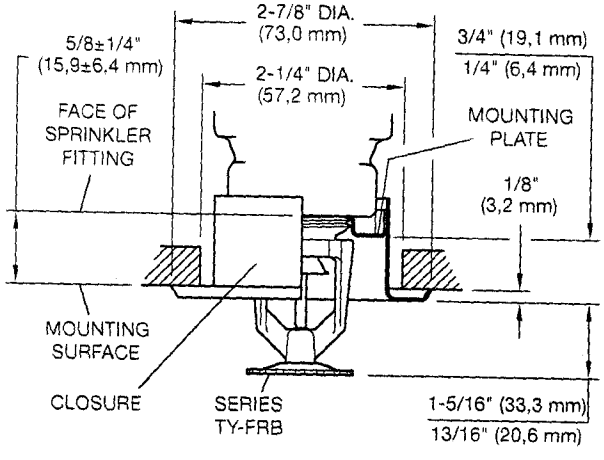

FIGURE 12
SERIES TY-FRB RECESSED PENDENT
WITH TWO-PIECE 3/4 INCH TOTAL ADJUSTMENT
STYLE 40 RECESSED ESCUTCHEON
8.0 K-FACTOR, 3/4 INCH NPT

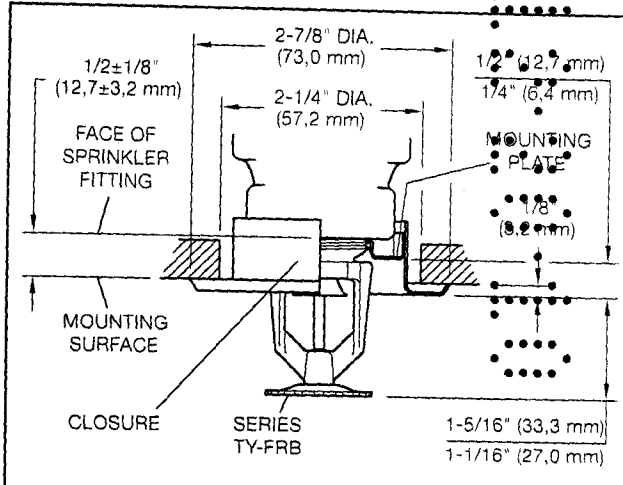

FIGURE 13
SERIES TY-FRB RECESSED PENDENT
WITH TWO-PIECE 1/2 INCH TOTAL ADJUSTMENT
STYLE 30 RECESSED ESCUTCHEON
8.0 K-FACTOR, 3/4 INCH NPT

Inspections of corrosion-resistant sprinklers are recommended at close range, instead of from the floor level per NFPA. Inspection at close range can better determine the exact sprinkler condition and the long-term integrity of the corrosion-resistant material, which can be affected by the corrosive conditions present.

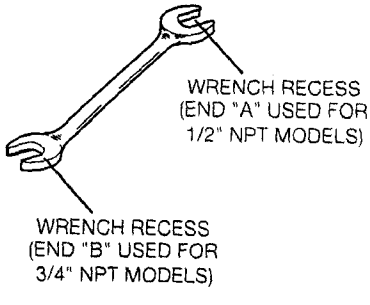

FIGURE 14
W-TYPE 6 SPRINKLER WRENCH

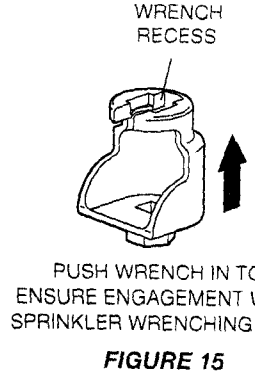

FIGURE 15
W-TYPE 7 RECESSED SPRINKLER WRENCH

P/N 57 – XXX – X – XXX

		MODEL/SIN
330	2.8K UPRIGHT (1/2"NPT)	TY1131
331	2.8K PENDENT (1/2"NPT)	TY1231
340	4.2K UPRIGHT (1/2"NPT)	TY2131
341	4.2K PENDENT (1/2"NPT)	TY2231
370	5.6K UPRIGHT (1/2"NPT)	TY3131
371	5.6K PENDENT (1/2"NPT)	TY3231
390	8.0K UPRIGHT (3/4"NPT)	TY4131
391	8.0K PENDENT (3/4"NPT)	TY4231
360	8.0K UPRIGHT (1/2"NPT)	TY4831*
361	8.0K PENDENT (1/2"NPT)	TY4931*

	SPRINKLER FINISH
1	NATURAL BRASS
4	WHITE POLYESTER
3	WHITE (RAL9010)*
9	CHROME PLATED
7	LEAD COATED

	TEMPERATURE RATINGS
135	135°F (57°C)
155	155°F (68°C)
175	175°F (79°C)
200	200°F (93°C)
286	286°F (141°C)

* Eastern Hemisphere sales only.

TABLE D
PART NUMBER SELECTION
SERIES TY-FRB PENDENT AND UPRIGHT SPRINKLERS

Limited Warranty

Products manufactured by Tyco Fire Suppression & Building Products (TFSBP) are warranted solely to the original Buyer for ten (10) years against defects in material and workmanship when paid for and properly installed and maintained under normal use and service. This warranty will expire ten (10) years from date of shipment by TFSBP. No warranty is given for products or components manufactured by companies not affiliated by ownership with TFSBP or for products and components which have been subject to misuse, improper installation, corrosion, or which have not been installed, maintained, modified or repaired in accordance with applicable Standards of the National Fire Protection Association, and/or the standards of any other Authorities Having Jurisdiction. Materials found by TFSBP to be defective shall be either repaired or replaced, at TFSBP's sole option. TFSBP neither assumes, nor authorizes any person to assume for it, any other obligation in connection with the sale of products or parts of products. TFSBP shall not be responsible for sprinkler system design errors or inaccurate or incomplete information supplied by Buyer or Buyer's representatives.

In no event shall TFSBP be liable, in contract, tort, strict liability or under any other legal theory, for incidental, indirect, special or consequential damages, including but not limited to labor charges, regardless of whether TFSBP was informed about the possibility of such damages, and in no event shall TFSBP's liability exceed an amount equal to the sales price.

The foregoing warranty is made in lieu of any and all other warranties, express or implied, including warranties of merchantability and fitness for a particular purpose.

This limited warranty sets forth the exclusive remedy for claims based on failure of or defect in products, materials or components, whether the claim is made in contract, tort, strict liability or any other legal theory.

This warranty will apply to the full extent permitted by law. The invalidity, in whole or part, of any portion of this warranty will not affect the remainder.

Ordering Procedure

Contact your local distributor for availability. When placing an order, indicate the full product name and Part Number (P/N).

Sprinkler Assemblies with NPT Thread Connections
Specify: (Specify Model/SIN), Quick Response, (specify K-factor), (specify temperature rating), Series TY-FRB (specify Pendent or Upright) Sprinkler with (specify type of finish or coating), P/N (specify from Table D).

Recessed Escutcheon:
Specify: Style (10, 20, 30, or 40) Recessed Escutcheon with (specify*) finish, P/N (specify*).

Sprinkler Wrench
Specify: W-Type 6 Sprinkler Wrench, P/N 56-000-6-387.

Specify: W-Type 7 Sprinkler Wrench, P/N 56-850-4-001.

* Refer to Technical Data Sheet TFP770.

Copyright © 2007-2010 Tyco Fire Suppression & Building Products. All rights reserved.

tyco Fire Suppression & Building Products

Technical Services: Tel: (800) 381-9312 / Fax: (800) 791-5500
Email: techserv@tycofp.com

Series RFII — 5.6 K-factor "Royal Flush II" Concealed Pendent Sprinklers Quick & Standard Response, Standard Coverage

General Description

The Tyco® Series RFII Quick Response (3-mm bulb) and Standard Response (5-mm bulb), 5.6 K-Factor, "Royal Flush II" Concealed Pendent Sprinklers are decorative sprinklers featuring a flat cover plate designed to conceal the sprinkler. These sprinklers are optimal for architecturally sensitive areas such as hotel lobbies, office buildings, churches, and restaurants.

Each sprinkler includes a Cover Plate/Retainer Assembly and a Sprinkler/Support Cup Assembly. The separable, two-piece assembly design provides the following benefits:

- Allows installation of the sprinklers and pressure testing of the fire protection system prior to installation of a suspended ceiling or application of the finish coating to a fixed ceiling.
- Permits the removal of suspended ceiling panels for access to building service equipment without having to first shut down the fire protection system and remove sprinklers.
- Provides for 1/2 inch (12,7 mm) of vertical adjustment to allow a measure of flexibility in determining the length of fixed piping to cut for the sprinkler drops.

IMPORTANT

Always refer to Technical Data Sheet TFP700 for the "INSTALLER WARNING" that provides cautions with respect to handling and installation of sprinkler systems and components. Improper handling and installation can permanently damage a sprinkler system or its components and cause the sprinkler to fail to operate in a fire situation or cause it to operate prematurely.

The Series RFII Sprinklers are shipped with a Disposable Protective Cap. The Protective Cap is temporarily removed during installation and replaced to help protect the sprinkler during ceiling installation or finish. The tip of the Protective Cap can be used to mark the center of the ceiling hole into plaster board or ceiling tiles by gently pushing the ceiling product against the Protective Cap. When ceiling installation is complete, the Protective Cap is removed and the Cover Plate/Retainer Assembly is installed.

As an option, the Series RFII Standard Response (5-mm bulb) "Royal Flush II" Concealed Pendent Sprinklers can be fitted with a silicone Air and Dust Seal. (Refer to Figure 5.) The Air and Dust Seal is intended for sensitive areas where it is desirable to prevent air and dust from the area above the ceiling to pass through the cover plate.

NOTICE

The Series RFII Concealed Pendent Sprinklers described herein must be installed and maintained in compliance with this document and with the applicable standards of the National Fire Protection Association, in addition to the standards of any authorities having jurisdiction. Failure to do so may impair the performance of these devices.

The owner is responsible for maintaining their fire protection system and devices in proper operating condition. The installing contractor or sprinkler manufacturer should be contacted with any questions.

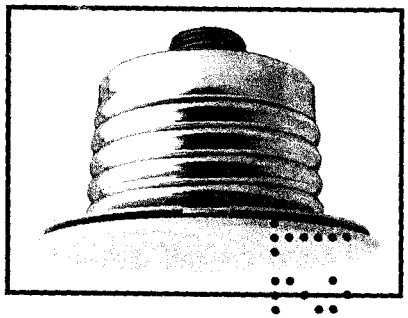

Sprinkler Identification Number (SIN)

TY3531 — 3 mm bulb
TY3551 — 5 mm bulb

Technical Data

Sprinkler Approvals
Approvals apply only to the service conditions indicated in the Design Criteria section.

- TY3531 (3-mm Bulb) is UL Listed, C-UL Listed, LPCB Approved (Ref. No. 094a/10), VdS Approved (Certificate No. G 4090007), and NYC Approved (MEA 353-01-E) as Quick Response.
- TY3531 (3-mm Bulb) is FM Approved as Standard Response.

  Factory Mutual does not approve any concealed sprinklers for quick response.
- TY3551 (5-mm Bulb) is UL Listed, C-UL Listed, FM Approved, LPCB Approved (Ref. No. 094a/9), and NYC Approved (MEA 353-01-E) as Standard Response.

Approvals for Air and Dust Seal
UL and C-UL Listed for use with the RFII Standard Response Concealed Sprinkler (TY3551).

Maximum Working Pressure
Maximum 250 psi (17,3 bar) by UL, C-UL, and NYC

Maximum 175 psi (12,1 bar) by FM, VdS, and LPCB

Temperature Rating
155°F/68°C Sprinkler with 139°F/59°C Plate

200°F/93°C Sprinkler with 165°F/74°C Plate

Discharge Coefficient
K= 5.6 GPM/psi$^{1/2}$ (80,6 LPM/bar$^{1/2}$)

Adjustment
1/2 inch (12,7 mm)

Finishes
See the Ordering Procedure section.

Physical Characteristics

Frame	Bronze
Support Cup	Chrome Plated Steel
Guide Pins	Stainless Steel
Deflector	Bronze
Compression Screw	Brass
Bulb	Glass
Cap	Bronze or Copper
Sealing Assembly	Beryllium Nickel w/ Teflon†
Cover Plate	Brass
Retainer	Brass
Ejection Spring	Stainless Steel

†DuPont Registered Trademark

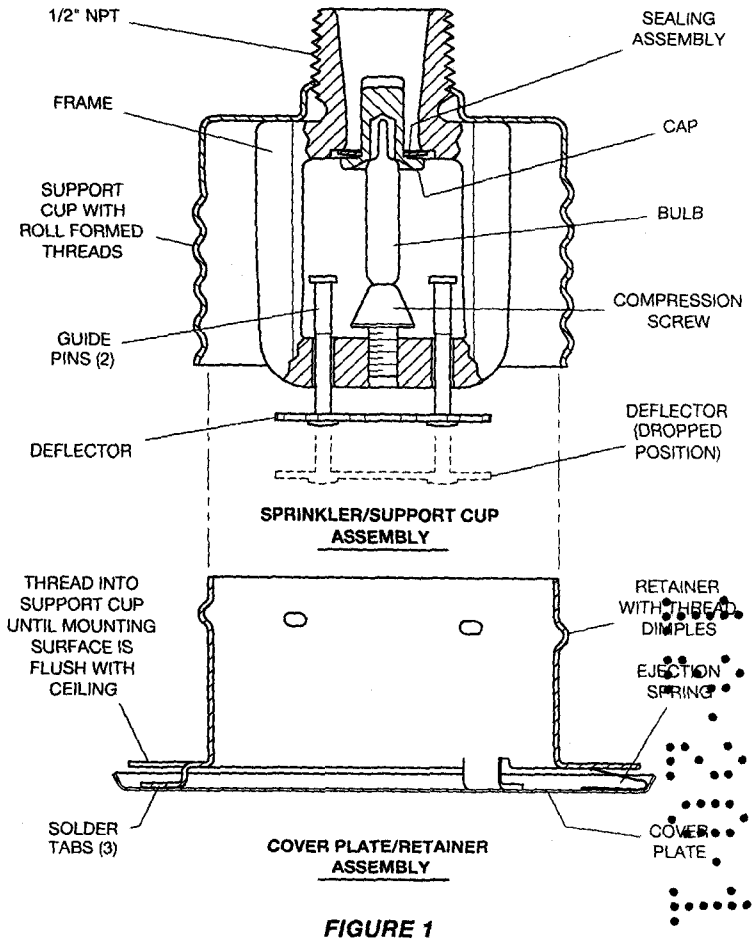

FIGURE 1
MODEL RFII CONCEALED SPRINKLER ASSEMBLY

Design Criteria

The Tyco® Series RFII Concealed Pendent Sprinklers are intended for fire protection systems designed in accordance with the standard installation rules recognized by the applicable Listing or Approval agency; for example, UL Listing is based on NFPA 13 and VdS Approval is based on the CEA 4001.

For more information on LPCB and VdS Approvals, contact Tyco Fire Suppression & Building Products at the following office:

Enschede, Netherlands
Telephone: 31-53-428-4444
Fax: 31-53-428-3377

The Series RFII Concealed Pendent Sprinklers are only listed and approved with the Series RFII Concealed Cover Plates having a factory applied finish.

NOTICE

Do not use the Series RFII in applications where the air pressure above the ceiling is greater than that below. Down drafts through the Sprinkler/Support Cup Assembly can delay sprinkler operation in a fire situation.

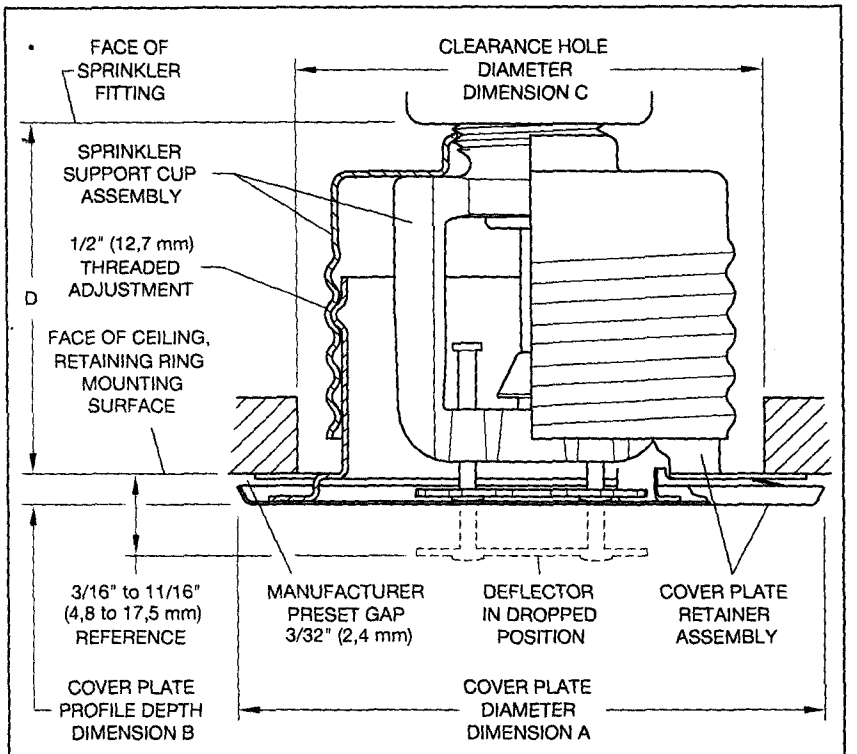

A: 3-1/4 inches (82,6 mm)
B: 3/16 inches (4,8 mm)
C: 2-3/8 to 2-5/8 inches (60,3 to 66,7 mm)
D: 1-3/4 to 2-1/4 inches (44,5 to 57,2 mm)

FIGURE 2
SERIES CONCEALED SPRINKLER INSTALLATION DIMENSIONS

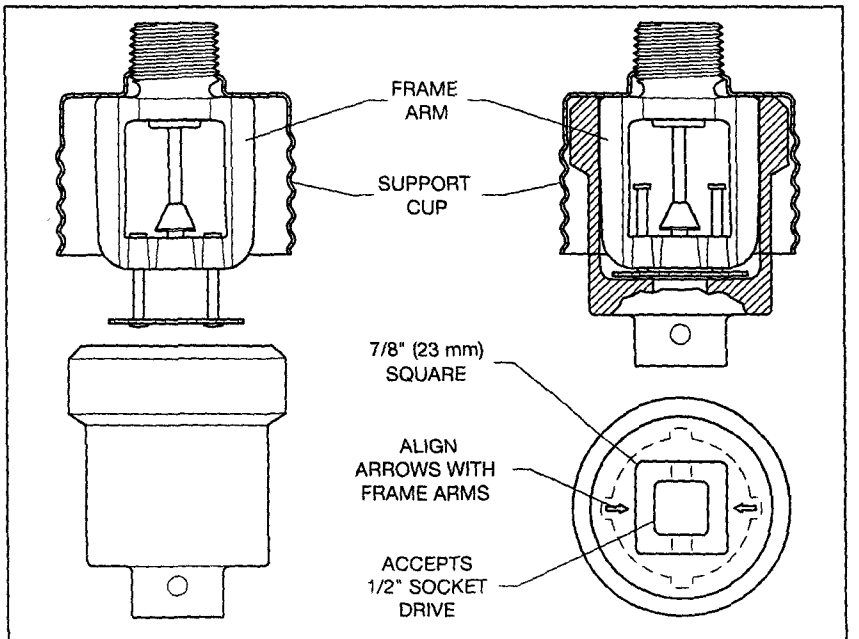

FIGURE 3
RFII SPRINKLER WRENCH

Operation

When exposed to heat from a fire, the Cover Plate, normally soldered to the Retainer at three points, falls away to expose the Sprinkler/Support Cup Assembly.

The Deflector—supported by the Guide Pins—then drops down to its operational position.

The glass Bulb contains a fluid that expands when exposed to heat. When the rated temperature is reached, the fluid expands sufficiently to shatter the glass Bulb, activating the sprinkler and allowing water to flow.

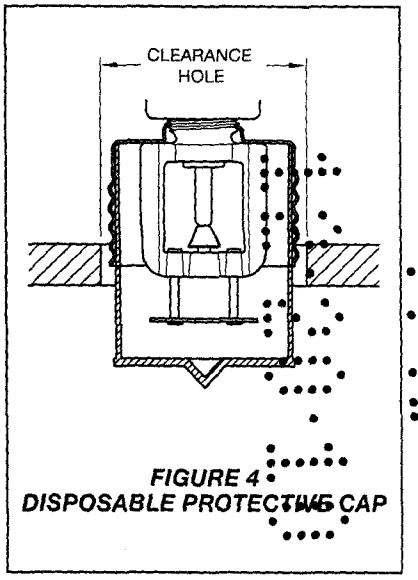

FIGURE 4
DISPOSABLE PROTECTIVE CAP

Installation

The Tyco® Series RFII must be installed in accordance with the following instructions.

NOTICE

Do not install any bulb-type sprinkler if the bulb is cracked or there is a loss of liquid from the bulb. With the sprinkler held horizontally, a small air bubble should be present. The diameter of the air bubble is approximately 1/16 inch (1,6 mm) for the 155°F/68°C and 3/32 inch (2,4 mm) for the 200°F/93°C temperature ratings.

Obtain a 1/2 inch NPT sprinkler joint by applying a minimum to maximum torque of 7 to 14 ft.-lbs. (9,5 to 19,0 Nm). Higher levels of torque can distort the sprinkler inlet with consequent leakage or impairment of the sprinkler.

Do not attempt to compensate for insufficient adjustment in the Sprinkler by under- or over-tightening the Sprinkler/Support Cup Assembly. Re-adjust the position of the sprinkler fitting to suit.

Step 1. Install the sprinkler only in the pendent position with the center-line of the sprinkler perpendicular to the mounting surface.

Step 2. Remove the Protective Cap.

Step 3. With pipe thread sealant applied to the pipe threads, hand-tighten the sprinkler into the sprinkler fitting.

Step 4. Wrench-tighten the sprinkler using only the RFII Sprinkler Wrench. (Refer to Figure 3.) Apply the RFII Sprinkler Wrench to the Sprinkler as shown in Figure 3.

Step 5. Replace the Protective Cap by pushing it upwards until it bottoms out against the Support Cup. (Refer to Figure 4.) The Protective Cap helps prevent damage to the Deflector and Arms during ceiling installation and/or finish. You can also use the Protective Cap to locate the center of the clearance hole by gently pushing the ceiling material up against the center point of the Protective Cap.

NOTICE

As long as the Protective Cap remains in place, the system is considered "Out of Service".

Step 6. After the ceiling has been completed with the 2-1/2 inch (63,5 mm) diameter clearance hole and in preparation for installing the Cover Plate/Retainer Assembly, remove and discard the Protective Cap. Verify that the Deflector moves up and down freely.

If the Sprinkler is damaged and the Deflector does not move up and down freely, replace the entire Sprinkler. Do not attempt to modify or repair a damaged sprinkler.

Step 7. When installing an Air and Dust Seal, refer to Figure 5; otherwise, proceed to Step 8. To attach the Air and Dust Seal, verify the angle of the outside edge of the seal is oriented according to Figure 5. Start the edge of the Retainer in the grooved slot of the Air and Dust Seal and continue around the retainer until the entire Air and Dust Seal is engaged.

Step 8. Screw on the Cover Plate/Retainer Assembly until the Retainer (shown in Figure 2) or the Air and Dust Seal (shown in Figure 5) contacts the ceiling. Do not continue to screw on the Cover Plate/Retainer Assembly so that it lifts a ceiling panel out of its normal position. If you cannot engage the Cover Plate/Retainer Assembly with the Support Cup or you cannot engage the Cover Plate/Retainer Assembly sufficiently to contact the ceiling, you must reposition the Sprinkler Fitting.

Care and Maintenance

The Tyco® Series RFII must be maintained and serviced in accordance with the following instructions.

NOTICE

Before closing a fire protection system main control valve for maintenance work on the fire protection system that it controls, obtain permission to shut down the affected fire protection system from the proper authorities and notify all personnel who may be affected by this action.

Absence of the Cover Plate/Retainer Assembly can delay sprinkler operation in a fire situation.

When properly installed, there is a nominal 3/32 inch (2,4 mm) air gap between the lip of the Cover Plate and the ceiling, as shown in Figure 2.

This air gap is necessary for proper operation of the sprinkler. If the ceiling requires repainting after sprinkler installation, ensure that the new paint does not seal off any of the air gap.

Do not pull the Cover Plate relative to the Enclosure. Separation may result.

Replace sprinklers that:

- are leaking or exhibiting visible signs of corrosion.
- were modified or over-heated.

Never paint, plate, coat, or otherwise alter automatic sprinklers after they leave the factory. Never repaint factory-painted Cover Plates. If necessary, replace them with factory-painted units. Non-factory applied paint can adversely delay or prevent sprinkler operation in the event of a fire.

Exercise care to avoid damage to sprinklers before, during, and after installation. Replace sprinklers damaged by dropping, striking, wrench twisting, wrench slipping, or the like. Also, replace any sprinkler that has a cracked bulb or that has lost liquid from its bulb. (Refer to the Installation section.)

If you must remove a sprinkler, do not reinstall it or a replacement without reinstalling the Cover Plate/Retainer Assembly. If a Cover Plate/Retainer Assembly becomes dislodged during service, replace it immediately.

Responsibility lies with sprinkler owners for the inspection, testing, and maintenance of their fire protection system and devices in compliance with this document, as well as with the applicable standards of the National Fire Protection Association (for example, NFPA 25), in addition to the standards of any other authorities having jurisdiction. Contact the installing contractor or sprinkler manufacturer regarding any questions.

Automatic sprinkler systems should be inspected, tested, and maintained by a qualified Inspection Service in accordance with local requirements and/or national code.

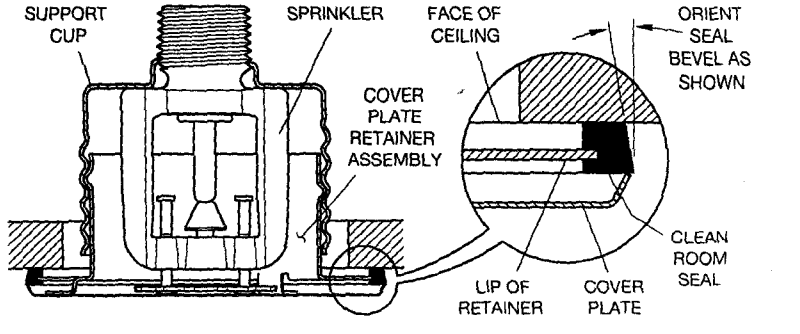

FIGURE 5
OPTIONAL AIR AND DUST SEAL FOR SERIES RFII (TY3551)

Limited Warranty

Products manufactured by Tyco Fire Suppression & Building Products (TFSBP) are warranted solely to the original Buyer for ten (10) years against defects in material and workmanship when paid for and properly installed and maintained under normal use and service. This warranty will expire ten (10) years from date of shipment by TFSBP. No warranty is given for products or components manufactured by companies not affiliated by ownership with TFSBP or for products and components which have been subject to misuse, improper installation, corrosion, or which have not been installed, maintained, modified or repaired in accordance with applicable Standards of the National Fire Protection Association, and/or the standards of any other Authorities Having Jurisdiction. Materials found by TFSBP to be defective shall be either repaired or replaced, at TFSBP's sole option. TFSBP neither assumes, nor authorizes any person to assume for it, any other obligation in connection with the sale of products or parts of products. TFSBP shall not be responsible for sprinkler system design errors or inaccurate or incomplete information supplied by Buyer or Buyer's representatives.

In no event shall TFSBP be liable, in contract, tort, strict liability or under any other legal theory, for incidental, indirect, special or consequential damages, including but not limited to labor charges, regardless of whether TFSBP was informed about the possibility of such damages, and in no event shall TFSBP's liability exceed an amount equal to the sales price.

The foregoing warranty is made in lieu of any and all other warranties, express or implied, including warranties of merchantability and fitness for a particular purpose.

This limited warranty sets forth the exclusive remedy for claims based on failure of or defect in products, materials or components, whether the claim is made in contract, tort, strict liability or any other legal theory.

This warranty will apply to the full extent permitted by law. The invalidity, in whole or part, of any portion of this warranty will not affect the remainder.

Ordering Procedure

Contact your local distributor for availability. When placing an order, indicate the full product name.

Sprinkler/Support Cup Assembly
Specify: (SIN), (temperature rating from below) Series RFII Concealed Pendent Sprinkler, P/N (specify).

	155°F/68°C	200°F/93°C
TY3531	51-792-1-155	51-792-1-200
TY3551	51-790-1-155	51-790-1-200

Separately Ordered Cover Plate/ Retainer Assembly:
Specify: (temperature rating from below) Series RFII Concealed Cover Plate with (finish), P/N (specify).

	139°F/59°C(a)	165°F/74°C(b)
Brass	56-792-1-135	56-792-1-165
Chrome	56-792-9-135	56-792-9-165
Signal White (RAL 9003)	56-792-4-135	56-792-4-165
Grey White (RAL 9002)	56-792-0-135	56-792-0-165
Pure White (c) (RAL 9010)	56-792-3-135	56-792-3-165
Custom	56-792-X-135	56-792-X-165

(a) For use with 155°F/68°C sprinklers.
(b) For use with 200°F/93°C sprinklers.
(c) Eastern Hemisphere sales only.

Sprinkler Wrench
Specify: RFII Sprinkler Wrench, P/N 56-000-1-075.

Air and Dust Seal
Specify: Air and Dust Seal, P/N 56-908-1-001.

© 2008 - 2009 **TYCO FIRE SUPPRESSION & BUILDING PRODUCTS**, 451 North Cannon Avenue, Lansdale, Pennsylvania 19446

ABBREVIATIONS

A.	ANCHOR
A/C.	AIR CONDITIONING
ACOUST.	ACOUSTICAL
ACP.	ACOUSTICAL CEILING PANEL
A.D.	AREA DRAIN
AFF.	ABOVE FINISH FLOOR
AL./ ALUM.	ALUMINUM
ANOD.	ANODIZE
@	AT
BD.	BOARD
BLDG.	BUILDING
BLK.	BLOCK
BLK'G.	BLOCKING
BM.	BEAM
B.M.	BENCH MARK
CAB.	CABINET
CEM.	CEMENT
CER.	CERAMIC
C.J.	CONTROL JOINT
C/L	CENTERLINE
CL./CLO.	CLOSET
CLG./CLNG.	CEILING
COL.	COLUMN
CMU	CONCRETE MASONRY UNIT
CONC.	CONCRETE
CONT.	CONTINUOUS
CONTR.	CONTRACTOR
COVER'G.	COVERING
D	DRYER
DBL	DOUBLE
D.D.	DECK DRAIN
D.F.	DRINKING FOUNTAIN
DIAM.	DIAMETER
DIM	DIMENSION
DET./DLT.	DETAILS
DWG.	DRAWING
E.A.	EACH
E.F.	EXHAUST FAN
E.J.	EXPANSION JOINT
ELECT./ELEC.	ELECTRICAL
ELEV.	ELEVATION / ELEVATOR
EQ.	EQUAL
EXH.	EXHAUST
EXIST.	EXISTING
EXP.	EXPANSION / EXPOSED
EXT.	EXTERIOR
F.D.	FLOOR DRAIN
F.E.	FIRE EXTINGUISHER
FEC/FIRE EXT. CAB.	FIRE EXTINGUISHER CABINET
FHA	FAIR HOUSING ACT
FIN.	FINISH
FLUOR.	FLUORESCENT
F.O.I.C.	FURNISHED BY OWNER, INSTALLED BY CONTRACTOR
GA.	GAUGE
GWB	GYPSUM WALL BOARD
GYP. BD.	GYPSUM BOARD
GALV.	GALVANIZED
GS.	GALVANIZED STEEL
GL.	GLASS
H.B.	HOSE BIBB
HCPD.	HANDICAPPED
HCWD	HOLLOW CORE WOOD
H.M.	HOLLOW METAL
HORIZ	HORIZONTAL
HDWE.	HARDWARE
HT.	HEIGHT
H.P.	HIGH POINT
I.D.	INTERIOR DIMENSION
INSUL.	INSULATION
INTERM	INTERMEDIATE
JAN.	JANITOR
JT.	JOINT
KIT.	KITCHEN
L. / LIN.	LINEN
LAM.	LAMINATED
LAV.	LAVATORY
L.P.	LIGHT POLE/LOW POINT
M.	MIRROR
MANUF.	MANUFACTURER
MAT.	MATERIAL
MAX.	MAXIMUM
M.H.	MANHOLE
MIN.	MINIMUM
MISC.	MISCELLANEOUS
MTL.	METAL
NEOPR.	NEOPRENE
N.G.V.D.	NATIONAL GEODETIC VERTICAL DATUM/1929
N.I.C.	NOT IN CONTRACT
NO. / #	NUMBER
N.T.S.	NOT TO SCALE
O.C.	ON CENTER
O.D.	OUTSIDE DIMENSION/OVERFLOW DRAIN
O.H.	OVERHANG
O.S.	OVERFLOW SCUPPERS
P.A.D.	PARKING AREA DRAIN
PTN	PARTITION
PJ	PANEL JOINT
PL	PLATE
PLYWD	PLYWOOD
PNL	PANEL
PLAM	PLASTIC LAMINATE
P.T.	PRESSURE TREATED
P.P.	POWER POLE
P.M.	PARKING METER
R.C.P.	*REFLECTED CEILING PLAN*
RE	REFER TO
REF.	REFRIGERATOR
REINF.	REINFORCING
REQ'D	REQUIRED
REV.	REVERSE
RFEC	RECESSED FIRE EXTING. CABINET
RM.	ROOM
R.D.	ROOF DRAIN
SHT.	SHEET
SCH.	SCHEDULE
SFEC	SEMI-RECESSED FIRE EXTING. CABINET
SH.	SHOWER
S.S.	STAINLESS STEEL
STL	STEEL
STD.	STANDARD
SECT.	SECTION
SIM.	SIMILAR
SPECS	SPECIFICATIONS
ST./STO.	STORAGE
STRUCT.	STRUCTURE
SCWD.	SOLID CORE WOOD
TEL.	TELEPHONE
TEMP.	TEMPERED
TBD.	TO BE DETERMINED
TYP.	TYPICAL
U.O.N.	UNLESS OTHERWISE NOTED
VAN.	VANITY
VCT.	VINYL COMPOSITION TILE

SYMBOLS

- NORTH ARROW
- COLUMN REFERENCE GRIDS
- COLUMN REFERENCE GRIDS
- WALL SECTION
- SHT. ON WHICH SECTION IS SHOWN
- BUILDING SECTION
- SHT. ON WHICH SECTION IS SHOWN
- DETAIL
- SHT. ON WHICH DETAIL IS SHOWN
- DETAIL ID ON THIS PAGE
- SHT. FROM WHICH DETAIL/SECTION IS TAKEN
- ID NO. WHERE DETAIL/SECTION COMES FROM
- WT19A — WALL TYPE
- XXX — DOOR NO.
- A — WINDOW TYPE
- 102 — ROOM NO.
- BREAK OR CUT LINE
- ELEVATION NGVD RELATED
- 6 — TYPICAL UNIT NUMBER
- 1 — ELEVATION NO.
- A-705 — INTERIOR ELEVATION KEY
- OPERABLE GLASS SLIDING DOOR
- FIXED GLASS SLIDING DOOR
- ELECTRICAL PANEL

MATERIALS

- STRUCTURAL CONCRETE
- CONCRETE MASONRY
- WOOD (FINISH)
- GROUT
- WOOD (ROUGH)
- INSULATION (FIBROUS)
- STEEL
- INSULATION (RIGID)
- GLASS
- ALUMINUM
- STUCCO OR PLASTER ON MTL. LATH
- GYPSUM BOARD
- MARBLE
- METAL – SMALL SCALE

LEGEND

- STUD PARTITION
- STUD PARTITION (1 HR FIRE RATED)
- STUD PARTITION (2 HR FIRE RATED)
- CONCRETE BLOCK
- CONCRETE COLUMN
- REINFORCED MASONRY
- 2' — PROPOSED CONTOUR
- 3' — EXISTING CONTOUR
- CENTER LINE
- CHASE WALL
- WORK ABOVE OR BELOW OR BEYOND ALL AS NOTED
- MATCH LINE
- ANGLE
- CHANNEL
- PLATE / PROPERTY LINE
- CENTER LINE
- PERPENDICULAR
- 45° — DEGREE
- HP — HORSEPOWER
- 1 HOUR WALL
- 2 HOUR WALL
- 4 HOUR WALL

DEMOLITION NOTES

1. IT IS NOT THE INTENT OF THESE PLANS TO SHOW EVERY DETAIL OF DEMOLITION AND CONSTRUCTION. CONTRACTOR SHALL VISIT JOB LOCATION TO BECOME THOROUGHLY FAMILIAR WITH THE WORK AND SHALL VERIFY ALL EXISTING CONDITIONS APPLICABLE TO THE DEMOLITION WORK PRIOR TO SUBMITTING A BID FOR THE WORK. IF ANY ITEMS AND/OR SYSTEMS ARE OTHER THAN AS DESCRIBED ON THESE DRAWINGS, THE CONTRACTOR SHALL SUBMIT A BID ON THE BASIS OF THE WORK. ACTUALLY REQUIRED TO DEMOLISH, PROVIDE, OR INSTALL ANY ITEMS OR SYSTEMS EQUAL TO THE DESIGN AS DRAWN AND QUALIFY THE BID ACCORDINGLY.

2. ALL EXISTING SURFACES AND EQUIPMENT TO REMAIN SHALL BE FULLY PROTECTED FROM DAMAGE. THE CONTRACTOR SHALL ASSUME FULL RESPONSIBILITY FOR DAMAGE AND SHALL MAKE REPAIRS REQUIRED WITHOUT ADDITIONAL COST TO THE OWNER.

3. NO DEBRIS SHALL BE ALLOWED TO ACCUMULATE ON THE JOB SITE. DEBRIS SHALL BE REMOVED BY THE CONTRACTOR AS THE JOB PROCEEDS, FROM THE SITE TO THE DUMPSTER OR OFF SITE ON A DAILY BASIS. DEBRIS IS NOT TO ACCUMULATE.

4. THE SITE SHALL BE LEFT BROOM CLEAN AT THE COMPLETION OF DEMOLITION. NO STRUCTURAL ELEMENTS SHALL BE REMOVED UNLESS THE PORTIONS AFFECTED ARE ADEQUATELY SUPPORTED BY EITHER TEMPORARY SHORING OR NEW STRUCTURAL ELEMENTS AS REQUIRED TO PROTECT THE STABILITY AND INTEGRITY OF THE EXISTING STRUCTURE.

5. DEMOLITION TO OCCUR IN SUCH A MANNER SO THAT ALL BUILDING STANDARD COMPONENTS SUCH AS LIGHTS, SWITCHES, ALL DIFFUSERS AND RETURN AIR GRILLES, POWER DEVICES, DOORS, FRAMES, HARDWARE, ETC. ARE CAREFULLY REMOVED AND SALVAGED FOR RE-USE.

6. REMOVE OR RELOCATE ALL WIRING, PLUMBING, AND MECHANICAL EQUIPMENT AFFECTED BY THE REMOVAL OF PARTITIONS. REMOVED PIPES AND/OR LINES SHALL BE CUT TO A POINT OF CONCEALMENT BEHIND OR BELOW FINISH SURFACE AND SHALL BE PROPERLY CAPPED OR PLUGGED. ALL WIRING, PLUMBING AND MECHANICAL EQUIPMENT SHALL BE CUT BEHIND THE WALL TO POINT OF CONCEALMENT AND BACK TO THE MAIN RISER, BRANCH LINE, PANEL BOARD, ETC... NO WIRING, PIPING, EQUIPM. IS TO BE ABANDONED ABOVE THE CEILING OR BEHIND THE WALLS. ALL WIRING, PIPING AND EQUIPMENT TO BE REMOVED SHALL BE CLEARLY SHOWN IN THE CONSTRUCTION DOCUMENTS.

7. REMOVE ABANDONED DUCTWORK, WIRES, PIPES, ETC. SERVING THIS TENANT SPACE FROM PLENUM ABOVE AND BELOW THE CEILING AND FLOOR SLAB. INSTALL VALVES AND CAPS AS REQUIRED. ALL ABANDONED OPENINGS THROUGH THE SLAB (PLUMBING, ELECTRICAL, ETC.) TO BE REPOURED TO MAINTAIN FIRE RATING. THE BASE BUILDING SPECIFICATIONS SHALL APPLY. REPLACE FIREPROOFING.

8. THE CONTRACTOR SHALL PROVIDE ADEQUATE WEATHER PROTECTION FOR THE BUILDING AND ITS CONTENTS DURING COURSE OF WORK.

9. THE CONTRACTOR SHALL FILE ALL NECESSARY CERTIFICATES OF INSURANCE WITH THE DEPARTMENT OF BUILDINGS, PAY ALL FEES, OBTAIN ALL PERMITS AND PROVIDE ANY AND ALL BONDS REQUIRED BY ANY CITY AGENCY IN ORDER TO DO THE WORK DESCRIBED HEREIN. CERTIFICATES OF INSURANCE ARE ALSO PROVIDED IN CONFORMANCE W/ LANDLORD REQUIREMENTS WHICH SHALL BE INCLUDED AS PART OF THE BID PACKAGE.

10. CONTRACTOR SHALL PERFORM ALL OPERATIONS OF DEMOLITION AND REMOVAL INDICATED ON DRAWINGS AND AS MAY BE REQUIRED BY THE WORK. ALL WORK SHALL BE DONE CAREFULLY NEATLY AND IN A SYSTEMATIC MANNER.

11. ALL ADJOINING PROPERTY AFFECTED BY ANY OPERATIONS OF DEMOLITION SHALL BE PROTECTED PER THE REQUIREMENTS OF APPLICABLE CODES.

12. THE CONTRACTOR SHALL PROVIDE, ERECT AND MAINTAIN ALL TEMPORARY BARRIERS AND GUARDS AND ALL TEMPORARY SHORING AND BRACING AS REQUIRED BY THE DEPARTMENT OF BUILDING RULES AND REGULATIONS.

13. EXISTING WINDOW TREATMENT TO BE REMOVED AS REQUIRED AND REINSTALLED BY CONTRACTOR.

14. CAREFULLY REMOVE EXISTING LIGHT FIXTURES + STORE FOR TENANT REUSE AS REQUIRED.

15. G.C. TO PATCH/ REPAIR/ CAP ALL POKETHROUGHS, CONDUIT, + PLUMBING PENETRATIONS THAT ARE NOT PERTINENT TO THE DESIGN FUNCTIONALITY OF THE NEW SPACE. ALL PATCHING, ETC. TO MATCH OR EXCEED EXISTING SLAB FIRE RATING.

16. REMOVE DRYWALL/ A.C.T. AND GRID CEILING AS REQUIRED.

17. FIRE EXTINGUISHER CABINETS TO BE CAREFULLY REMOVED + RETAINED FOR LANDLORD'S REUSE.

18. ALL WORK IS TO BE COORDINATED W/ BUILDING MANAGEMENT.

19. G.C. TO MAINTAIN INTEGRITY OF FIRE ENVELOPE DURING DEMO, RENOVATION AND CONSTRUCTION.

1. SITE LOCATION PLAN

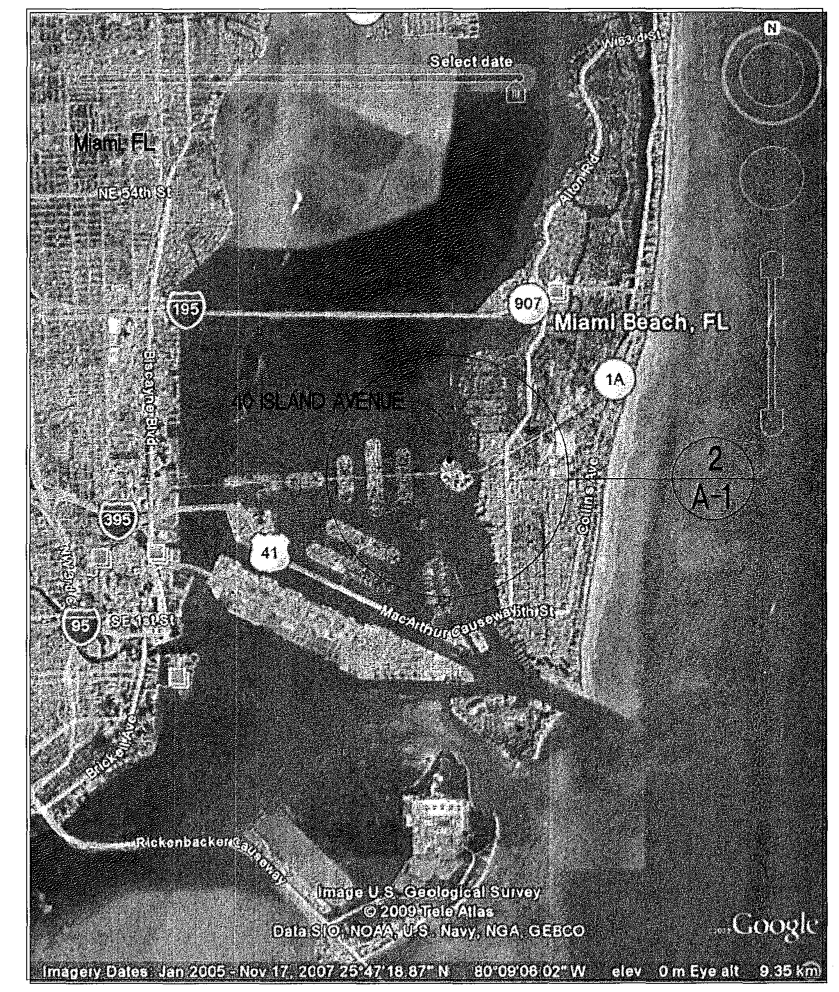

2. KEY SITE PLAN

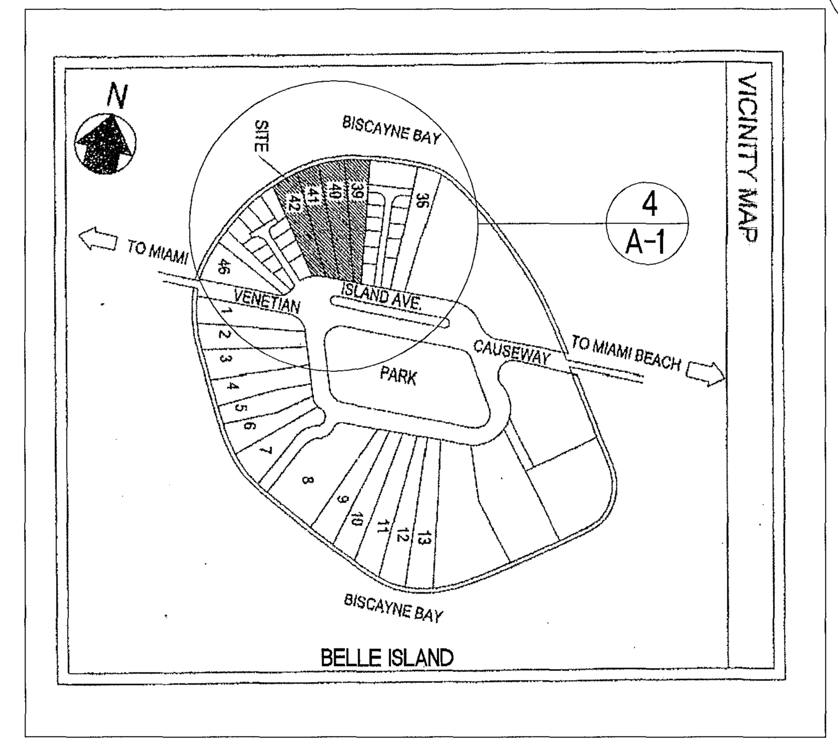

3. LEGAL DESCRIPTION

LOTS 39, 40, 41 AND 42 OF 'AMENDED PLAT OF BELLE ISLAND' ACCORDING TO THE PLAT THEREOF RECOVERED IN PLAT BOOK 5 AT PAGE 11 OF THE PUBLIC RECORDS OF MIAMI-DADE COUNTY, FLORIDA AND BEING SITUATED ON BELLE EISLAND, ON VENETIAN CAUSEWAY, WITHIN THE CITY LIMITS OF MIAMI BEACH, FLORIDA.

4. KEY LOCATION PLAN

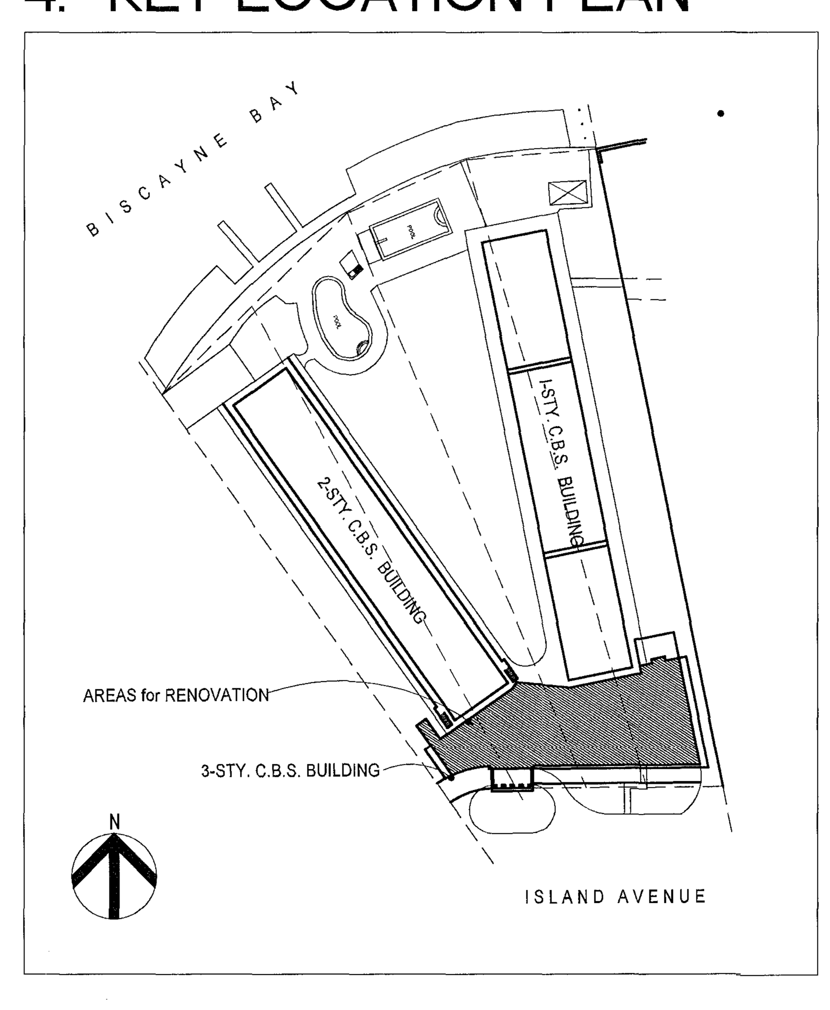

INDEX of DRAWINGS

ARCHITECTURE:

A-1	COVER + CONTENTS
A-2	FIRE EGRESS PLAN
A-3	DEMOLITION PLAN
A-4	CONSTRUCTION PLAN
A-5	REFLECTED CEILING PLAN
A-5.1	EMERGENCY LIGHTING
A-6	TELE + ELECTRIC PLAN
A-7	SCHEDULES
A-8	INTERIOR ELEVATIONS
A-9	DETAILS
A-10	DETAILS
A-11	UL DETAIL
A-12	GENERAL NOTES
A-13	GENERAL NOTES
A-14	PENETRATION DETAILS
A-15	PENETRATIION DETAILS

MECHANICAL ENGINEERING

M-0	NOTES + LEGEND
M-1	PLAN DETAILS

ELECTRICAL ENGINEERING

E-0	NOTES + LEGEND
E-1	ELEC. FLOOR PLAN
E-1D	ELEC. DEMO PLAN
E-2	ELEC. REF. CLG PLAN
E-3	ELEC SCHEDULES

PLUMBING ENGINEERING

P-0	NOTES + LEGEND
P-1	FLOOR PLAN
P-1D	DEMO PLAN
P-2	SCHEDULE + DETAILS

FIRE SAFETY ENGINEERING

FP-0	NOTES + LEGEND
FP-1	REF. CLG. PLAN
FP-2	DETAILS
FA-1	FIRE ALARM FLOOR PLAN

B1004171

ALTERATION - LEVEL 2

THIS IS AN ALTERATION - LEVEL 2 WHICH INCLUDES THE RECONFIGURATION OF SPACE, THE ADDITION OR ELIMINATION OF ANY DOOR OR WINDOW, THE RECONFIGURATION OR EXTENSION OF ANY SYSTEM OR THE INSTALLATION OF ANY ADDITIONAL EQUIPMENT.

GC NOTES

1. ALL WORK LISTED ON THE CONSTRUCTION DOCUMENTS + NOTES AS SHOWN OR IMPLIED ON DRAWINGS SHALL BE SUPPLIED AND INSTALLED BY THE GENERAL CONTRACTOR, UNLESS OTHERWISE NOTED ON DRAWINGS. IT IS EXPECTED THAT THE GENERAL CONTRACTOR WILL COORDINATE WORK WITH THE SUB-CONTRACTORS TO ASSURE COONSTRCUTION SCHEDULES ARE MET.

OFFICE COPY
CITY OF MIAMI BEACH
APPROVED FOR PERMIT BY THE FOLLOWING:
BUILDING: 12/09/10
ZONING: 12/14/10
DRB/HPB:
CONCURRENCY: 12/13/10
12/14/10
12/14/10
MECHANICAL: 11/12/10
FIRE PREVENTION: F. NEWMANS 11/22/10
ENGINEERING: 12/20/10
PUBLIC WORKS: 12.20.10
STRUCTURAL: N/A 12/14/10
ELEVATOR:

PUBLIC WORKS
PLAN REVIEW NOTICE
Phone 305-673-7080 Fax 305-673-7028
THIS PLAN REVIEW CONSTITUTES APPROVAL FOR OBTAINING BUILDING PERMITS ONLY.
All construction and/or use of equipment in the right-of-way and/or easements, requires a separate Public Works Department permit prior to start of construction.
Permit Requirements: Proof of existing sidewalk/swale area conditions (pictures) and/or posting of sidewalk/roadway bonds (Public Works Inspection of the right-of-way will be required prior to final sign-off on the C.C. / C.O., or the release of bonds.)
Approved/Reviewed By: Date: 12.20.10

NOTICE: In addition to the requirement of this permit there may be additional restrictions applicable to this property that may be found in the public records of this County and there may be additional permits required from other government entities such as water management districts, state agencies or federal agencies. Approval of Miami Beach assumes no responsibility for accuracy of or results from these plans which are approved subject to compliance with all Federal, State, and local laws, Rules, and Regulations.

1	9.13.10	PERMIT COMMENTS
2	10.29.10	PERMIT COMMENTS

Owner:
FERRADO LIDO, LLC
STANDARD / MIAMI
40 ISLAND WAY
MIAMI BEACH, FL 33139
tele: 305-673-1717

Architect:
ARTHUR J. MARCUS ARCHITECT P.A.
1450 LINCOLN ROAD
MIAMI BEACH, FL 33139
tele: 305-674-8945

MEP Engineering:
UCI ENGINEERING INC.
4247 S.W. 71st AVENUE
MIAMI, FL
tele: 305-661-0800

Seal

ARTHUR J. MARCUS ARCHITECT P.A.
1450 LINCOLN ROAD MIAMI BEACH, FL 33139 305.674.8945
AA26000962

Project:
INTERIOR RENOVATIONS FOR THE
STANDARD MIAMI HOTEL
40 ISLAND AVENUE
MIAMI BEACH, FL 33139

Drawing Title
COVER

Drawn By	Issue Date
AJM	9.09.09

Checked By	Scale
AJM	AS NOTED

Drawing No. A-1

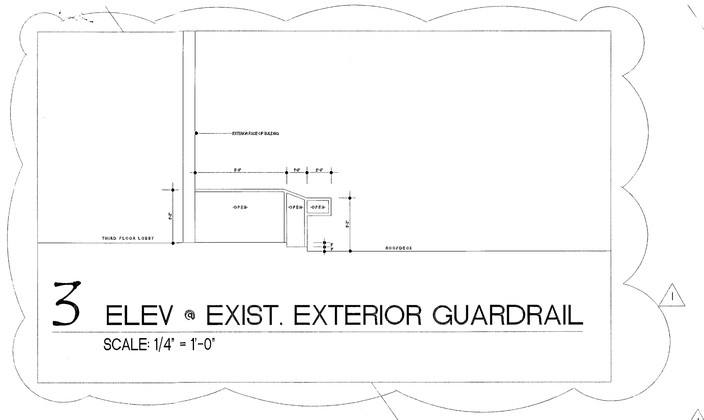

3 ELEV @ EXIST. EXTERIOR GUARDRAIL

SCALE: 1/4" = 1'-0"

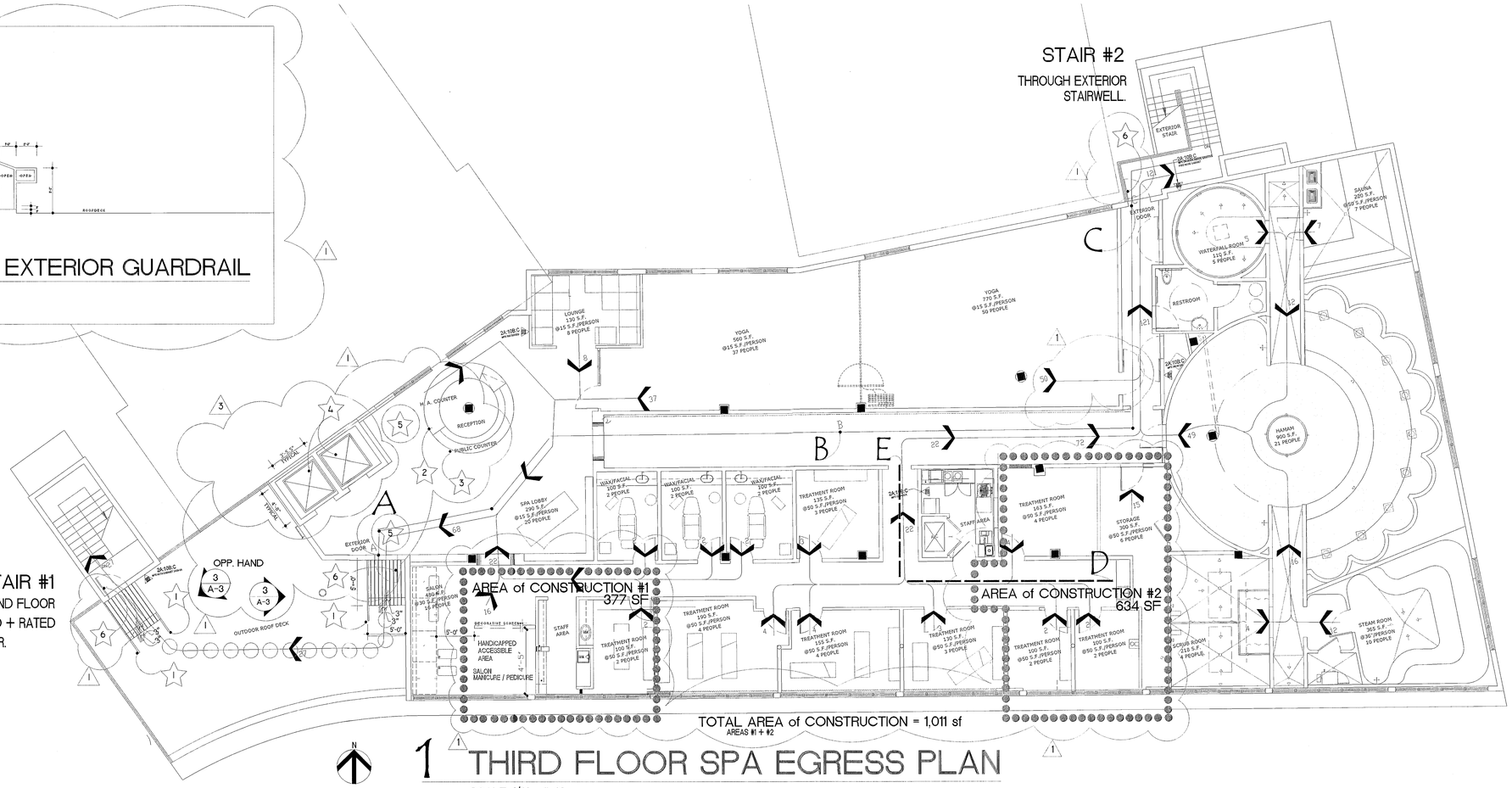

1 THIRD FLOOR SPA EGRESS PLAN

SCALE: 1/8" = 1'-0"

EGRESS NOTES

TOTAL TRAVEL DISTANCE: A - C = 131'-0"

TOTAL TRAVEL DISTANCE: A - B = 56'-6" (A-C / 2)

TOTAL TRAVEL DISTANCE: D - E = 43'-8"

(DEAD END CORRIDORS NOT TO EXCEED 50'-0")

AS PER EXCEPTION 3 TO NFPA 101-7.2.2.6.3: SEPARATION + PROTECTION OF EXISTING OUTSIDE STAIRS NOT REQUIRED.

AS PER EXCEPTION 1 TO NFPA 101-13.2.6: TRAVEL DISTANCE TO EXITS SHALL NOT EXCEED 200'-0". EXISTING EXTERIOR STAIR IS PART OF EXIT ACCESS AND IS NOT AN EXIT COMPONENT.

AS PER EXCEPTION 3 TO NFPA 101-7.2.2.4.6: EXISTING GUARD RAILS ON EXISTING STAIRS SHALL BE PERMITTED TO BE NOT LESS THAN 30"HIGH.

ADDITIONAL NOTES

A. FIRE PROTECTION SYSTEM SHOP DRAWINGS ARE TO BE SUBMITTED BY GC TO INDICATE CONFORMANCE WITH THE CODE AND SHALL BE APPROVED PRIOR TO SYSTEM INSTALLATION.

B. ALTERED AREAS ARE SAME BUSINESS OCCUPANCY AS EXISTING AREAS. ALL AREAS ARE PART OF RESIDENTIAL GROUP R-1: HOTELS (TRANSIENT) PER FBC CH.3.

C. PER FBC 105.3.5 THE MINIMUM TYPE OF CONSTRUCTION IS TYPE 'I I I A'

D. PER FBC TABLE 508.3.3 THE FIRE RATING FOR OCCUPANCY AND TENANT SEPARATION, A ONE HOUR FIRE SEPARATION IS REQUIRED BETWEEN THE HOTEL OCCUPANCY AND THE SPA / BUSINESS OCCUPANCY.

E. ALL EXIT DOORS HAVE THE REQUIRED PANIC HARDWARE DEVICES.

1

LEGEND

OCCUPANCY COUNT

DIRECTION OF TRAVEL

DIRECTION OF TRAVEL

NOTES

1. EXISTING CODE COMPLIANT RAILINGS AND STEPS. SEE DETAIL 3 THIS SHEET.
2. HANDICAPPED ACCESSIBLE COUNTER AT 2'-10.5" H.
3. 3'-10.5" HIGH SERVICE COUNTER
4. THE EXISTING INSIDE CAB DIMENSIONS OF 3'-5.5" x 4'-8" WILL MEET THE EQUIVALENCY AS STATED IN FBC SECTION 11-4.1.6(3)(C)(iii)
5. 5'-0" DIAMETER MANEUVERING CLEARANCE
6. EXISTING PUSH-BAR EGRESS HARDWARE AT EXISTING EGRESS DOOR.

3

SCOPE of WORK

THE SCOPE OF WORK INCLUDES 1,011 SF OF INTERIOR RENOVATIONS, AT TWO SEPARATE AREAS OF THE SPA ON THE THIRD FLOOR.

CODES

CODES in EFFECT: (1)	2007 FLORIDA BUILDING CODE
ZONING CLASSIFICATION:	R-1 HOTEL/MOTEL
ZONING CLASSIFICATION:	R-1 HOTEL/MOTEL
TOTAL NUMBER OF STORIES:	3
CONSTRUCTION TYPE:	III 2
SPLINKLERED:	YES
DISCHARGE OF EXITS:	150'-0"
PORTABLE FIRE EXTINGUISHERS:	PER N.F.P.A. 10
INTERIOR WALL / CEILING FINISH	CLASS A or B 1
STAIRS	PER N.F.P.A. 101
INTERIOR WALL + CEILING FINISH MAT'LS FOR ALL EXIT ENCLOSURES, LOBBIES + CORRIDORS THAT ARE PART OF AN EXIT ACCESS.	CLASS 'A' or CLASS 'B' 2
OCCUPANCY + TENANT SEPARATION PER FBC TABLE 508.3.3	NO SEPARATION REQUIREMENT BUILDING IS EQUIPED THROUGHOUT W/AUTOMATIC SPRINKLER SYSTEM.

(1) WORK TO MEET ALL REQUIREMENTS OF THE FLORIDA FIRE PREVENTION CODE 2007

PLUMBING FIXTURE COUNT
SECOND + THIRD FLOORS COMBINED

TOTAL NUMBER OF PERSONS - 391

PUBLIC	PROVIDED
MALE	
WATER CLOSETS	5
URINALS	3
LAVATORIES	3
FEMALE	
WATER CLOSETS	5
LAVATORIES	3
SERVICE SINK	2

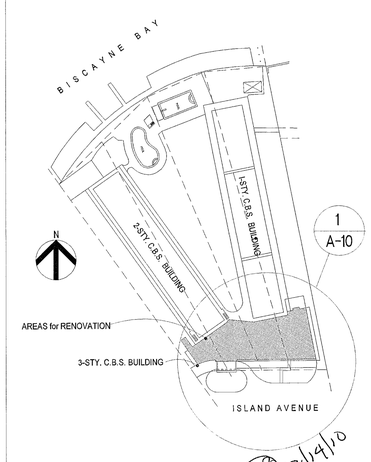

2 KEY LOCATION PLAN

1	9.13.10	PERMIT COMMENTS
2	10.29.10	PERMIT COMMENTS
3	11.11.10	PERMIT COMMENTS

Owner:
FERRADO LIDO, LLC
STANDARD / MIAMI
40 ISLAND WAY
MIAMI BEACH, FL 33139
tele: 305-673-1717

Architect:
ARTHUR J. MARCUS ARCHITECT P.A.
1450 LINCOLN ROAD
MIAMI BEACH, FL 33139
tele: 305-674-8945

MEP Engineering:
UCI ENGINEERING INC.
4247 S.W. 71st AVENUE
MIAMI, FL 33155
tele: 305-661-0800

Seal

ARTHUR J. MARCUS ARCHITECT, P.A.
1450 LINCOLN ROAD MIAMI BEACH, FL 33139 305.674.8945
A-AR0000062

Project:

INTERIOR RENOVATIONS FOR THE
STANDARD MIAMI HOTEL
40 ISLAND AVENUE
MIAMI BEACH, FL 33139

Drawing Title
FIRE EGRESS PLAN

Drawn By	Issue Date
AJM	9.09.09
Checked By	**Scale**
AJM	1/4" = 1'-0"

A-2
Drawing No.

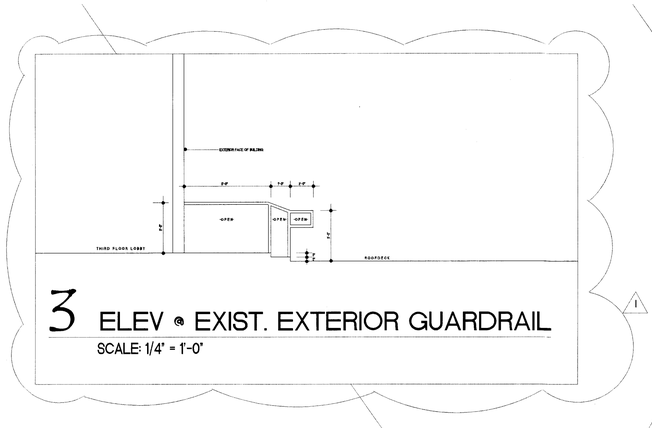

3 ELEV @ EXIST. EXTERIOR GUARDRAIL

SCALE: 1/4" = 1'-0"

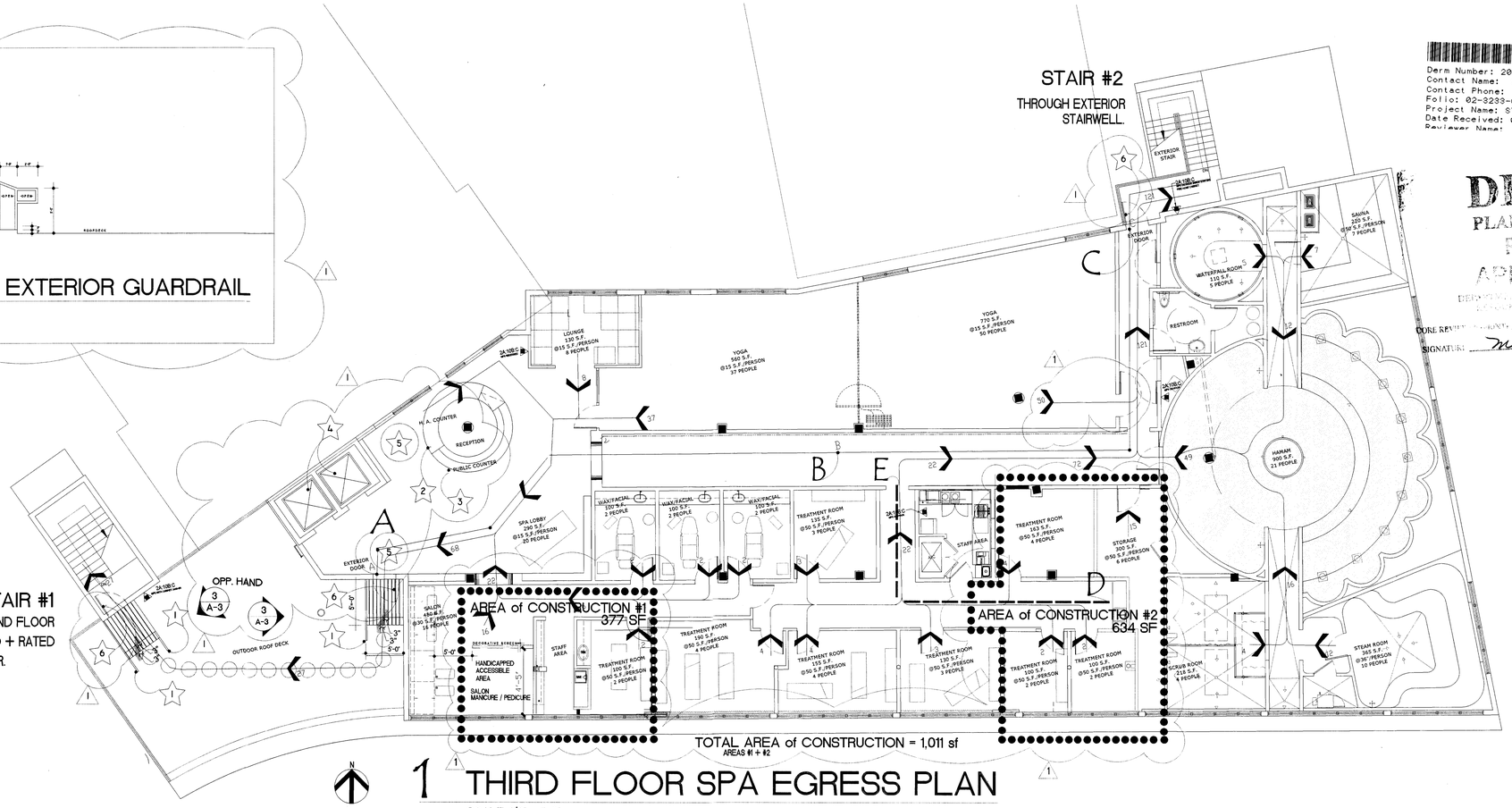

1 THIRD FLOOR SPA EGRESS PLAN

SCALE: 1/8" = 1'-0"

EGRESS NOTES

TOTAL TRAVEL DISTANCE: A - C = 131'-0"

TOTAL TRAVEL DISTANCE: A - B = 56'-6" (A-C / 2)

TOTAL TRAVEL DISTANCE: D - E = 43'-8"

(DEAD END CORRIDORS NOT TO EXCEED 50'-0")

AS PER EXCEPTION 3 TO NFPA 101-7.2.2.6.3: SEPARATION + PROTECTION OF EXISTING OUTSIDE STAIRS NOT REQUIRED.

AS PER EXCEPTION 1 TO NFPA 101-13.2.6: TRAVEL DISTANCE TO EXITS SHALL NOT EXCEED 200'-0". EXISTING EXTERIOR STAIR IS PART OF EXIT ACCESS AND IS NOT AN EXIT COMPONENT.

AS PER EXCEPTION 3 TO NFPA 101-7.2.2.4.6: EXISTING GUARD RAILS ON EXISTING STAIRS SHALL BE PERMITTED TO BE NOT LESS THAN 30"HIGH.

ADDITIONAL NOTES

A. FIRE PROTECTION SYSTEM SHOP DRAWINGS ARE TO BE SUBMITTED BY GC TO INDICATE CONFORMANCE WITH THE CODE AND SHALL BE APPROVED PRIOR TO SYSTEM INSTALLATION.

B. ALTERED AREAS ARE SAME BUSINESS OCCUPANCY AS EXISTING AREAS. ALL AREAS ARE PART OF RESIDENTIAL GROUP R-2: HOTELS (TRANSIENT) PER FBC CH.3.

C. PER FBC 105.3.5 THE MINIMUM TYPE OF CONSTRUCTION IS TYPE 'I I I A'

D. PER FBC TABLE 508.3.3 THE FIRE RATING FOR OCCUPANCY AND TENANT SEPARATION, A ONE HOUR FIRE SEPARATION IS REQUIRED BETWEEN THE HOTEL OCCUPANCY AND THE SPA / BUSINESS OCCUPANCY.

E. ALL EXIT DOORS HAVE THE REQUIRED PANIC HARDWARE DEVICES.

LEGEND

OCCUPANCY COUNT

DIRECTION OF TRAVEL

DIRECTION OF TRAVEL

NOTES

1. EXISTING CODE COMPLIANT RAILINGS AND STEPS. SEE DETAIL 3 THIS SHEET.
2. HANDICAPPED ACCESSIBLE COUNTER AT 2'-10.5" H
3. 3'-10.5" HIGH SERVICE COUNTER
4. INTERIOR ELEVATOR CAB DIMENSIONS: 3'-5.5" x 4'-8"
5. 5'-0" DIAMETER MANEUVERING CLEARANCE
6. EXISTING PUSH-BAR EGRESS HARDWARE AT EXISTING EGRESS DOOR.

SCOPE of WORK

THE SCOPE OF WORK INCLUDES 1,011 SF OF INTERIOR RENOVATIONS, AT TWO SEPARATE AREAS OF THE SPA ON THE THIRD FLOOR.

CODES

CODES in EFFECT: (1)	2007 FLORIDA BUILDING CODE
ZONING CLASSIFICATION:	R-1 HOTEL/MOTEL
ZONING CLASSIFICATION:	R-1 HOTEL/MOTEL
TOTAL NUMBER OF STORIES:	3
CONSTRUCTION TYPE:	VI
SPLINKLERED:	YES
DISCHARGE OF EXITS:	150'-0"
PORTABLE FIRE EXTINGUISHERS:	PER N.F.P.A. 10
INTERIOR WALL / CEILING FINISH	CLASS A or B
STAIRS	PER N.F.P.A. 101
INTERIOR WALL + CEILING FINISH MAT'LS FOR ALL EXIT ENCLOSURES, LOBBIES + CORRIDORS THAT ARE PART OF AN EXIT ACCESS.	CLASS 'A' or CLASS 'B'

(1) WORK TO MEET ALL REQUIREMENTS OF THE

FLORIDA FIRE PREVENTION CODE 2007

PLUMBING FIXTURE COUNT
SECOND + THIRD FLOORS COMBINED

TOTAL NUMBER OF PERSONS - 391

PUBLIC	PROVIDED
MALE	
WATER CLOSETS	5
URINALS	3
LAVATORIES	3
FEMALE	
WATER CLOSETS	5
LAVATORIES	3
SERVICE SINK	2

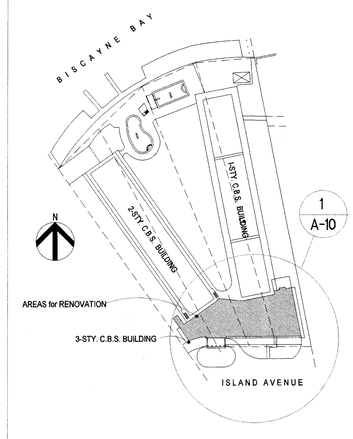

2 KEY LOCATION PLAN

Derm Number: 2010-0715-1523-5660
Contact Name: SANDRA FORTILLO
Contact Phone: (40)ISL-AND
Folio: 02-3233-004-0090
Project Name: STANDARD MIAMI HOTEL
Date Received: 07/15/2010
Reviewer Name:

DERM
PLAN REVIEW
FINAL
APPROVAL
DEPARTMENT OF ENVIRONMENTAL RESOURCES MANAGEMENT
CORE REVIEWER: MARIA FUN
SIGNATURE: Maria Fun DATE 11-5-10

No.	Date	Revision
1	9.13.10	PERMIT COMMENTS

Owner:
FERRADO LIDO, LLC
STANDARD / MIAMI
40 ISLAND WAY
MIAMI BEACH, FL 33139
tele: 305-673-1717

Architect:
ARTHUR J. MARCUS ARCHITECT P.A.
1450 LINCOLN ROAD
MIAMI BEACH, FL 33139
tele: 305-674-8945

MEP Engineering:
UCI ENGINEERING INC.
4247 S.W. 71st AVENUE
MIAMI, FL 33155
tele: 305-661-0800

Seal

ARTHUR J. MARCUS ARCHITECT, P.A.
1450 LINCOLN ROAD MIAMI BEACH, FL 33139 305.674.8945
AA26000662

Project:
INTERIOR RENOVATIONS FOR THE
STANDARD MIAMI HOTEL
40 ISLAND AVENUE
MIAMI BEACH, FL 33139

Drawing Title
FIRE EGRESS PLAN

Drawn By: AJM
Issue Date: 9.09.09
Checked By: AJM
Scale: 1/4" = 1'-0"

A-2
Drawing No.

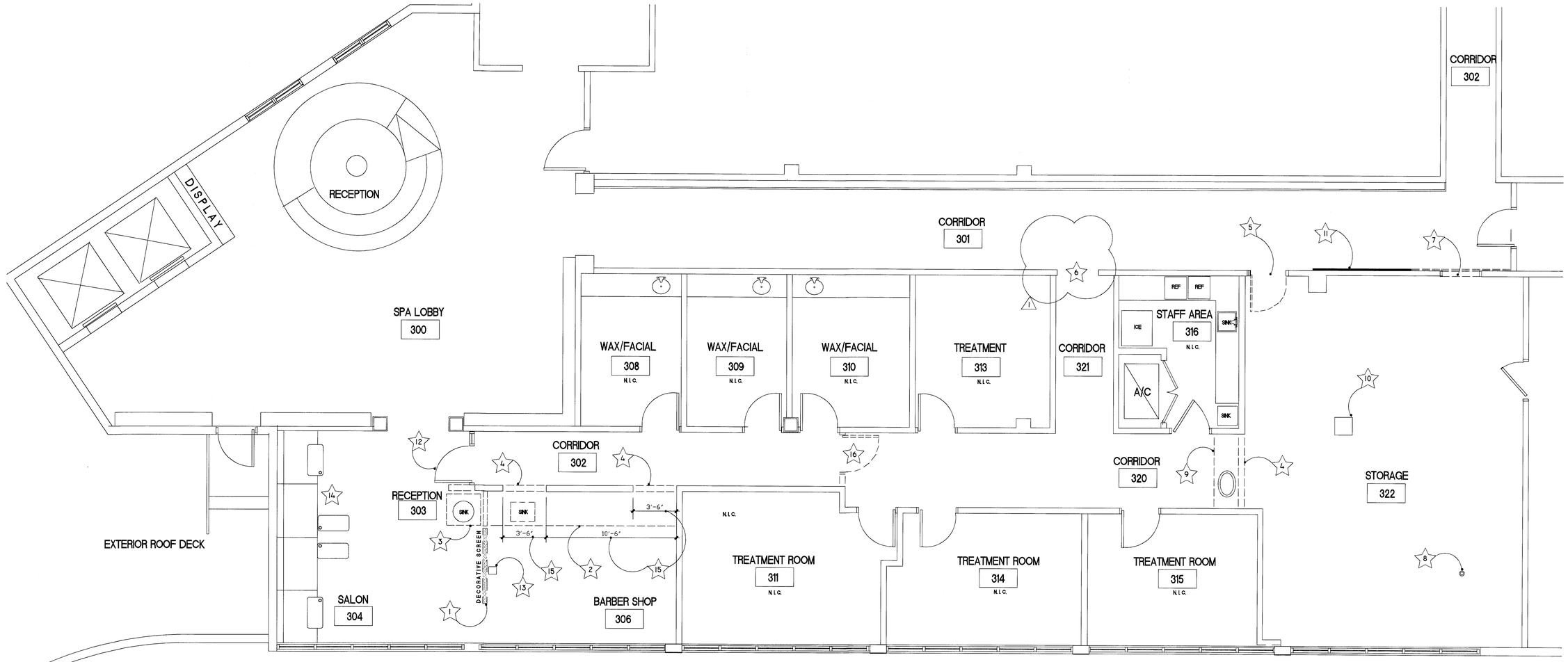

1 PARTIAL THIRD FLOOR SPA DEMOLITION PLAN

SCALE: 1/4" = 1'-0"

LEGEND

- EXISTING PARTITION TO REMAIN
- EXISTING PARTITION TO BE REMOVED
- DECORATIVE SCREEN — EXISTING WHITE PLASTIC DECORATIVE SCREEN ALREADY MOUNTED IN 1X6 WOOD FRAME TO BE STORED AND RETAINED FOR RE-USE.
- 311 — ROOM TAG
- 1 — NOTE TAG

NOTES

1. REMOVE + RETAIN EXISTING AND SET ASIDE DECORATIVE SCREEN FOR RE-USE.
2. REMOVE EXISTING SINK AND COUNTERTOP IN BARBER SHOP
3. REMOVE EXISTING SINK
4. GC TO PROVIDE NEW DOOR OPENINGS WITHIN EXISTING PARTITIONS.. MINIMIZE ALTERATIONS TO EXISTING DRYWALL CEILING CONSTRUCTION
5. GC TO CAREFULLY REMOVE EXISTING DOOR W/WD SLAT FRONT AND SET ASIDE FOR RE-USE IN STORAGE ROOM. . IF POSSIBLE REMOVE DOOR FRAME AND RE-USE.
6. EXISTING FRAMED OPENING WITH NO DOOR, TO REMAIN.
7. REMOVE EXISTING 8'-0" WIDE SLAT-WOOD PANEL FOR POSSIBLE RE-USE . PROVIDE NEW OPENING FOR RELOCATION OF EXISTING DOOR. SEE 5
8. EXISTING 5" DIAMETER PIPE
9. EXISTING BASE AND WALL CABINETS AND SINK TO BE RELOCATED TO NEW LOCATION IN CORRDIOR 320. SEE CONSTRCUTION PLAN.
10. EXISTING DRYWALL ENCLOSED COLUMN.

NOTES

11. THE SECOND 8'-0" WIDE WOOD SLAT PANEL TO REMAIN.
12. REMOVE EXISTING GLASS DOOR AND SIDELIGHT
13. PIPE COLUMN ENCLOSED IN DRYWALL TO REMAIN.
14. EXISTING BANQUETTE SEATING + MOVEABLE TABLES ON FLOOR TO CEILING STRUCTURAL SUPPORTS TO REMAIN.
15. GC TO COORDINATE EXTENT OF DEMOLITION IN FIELD HEIGHT OF OPENINGS SHALL MATCH DOOR FRAME HEIGHTS.
16. GC TO REMOVE EXISTING DOOR AND SIDE WALL. PATCH AND REPAIR ADJACENT WALL SURFACES.

KEY LOCATION PLAN

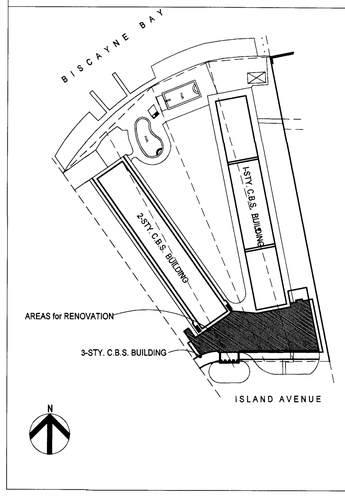

1	10.29.10	PERMIT COMMENTS

Owner:
FERRADO LIDO, LLC
STANDARD / MIAMI
40 ISLAND WAY
MIAMI BEACH, FL 33139
tele: 305-673-1717

Architect:
ARTHUR J. MARCUS ARCHITECT P.A.
1450 LINCOLN ROAD
MIAMI BEACH, FL 33139
tele: 305-674-8945

MEP Engineering:
UCI ENGINEERING INC.
4247 S.W. 71st AVENUE
MIAMI, FL 33155
tele: 305-661-0800

Seal

ARTHUR J. MARCUS ARCHITECT, P.A.
1450 LINCOLN ROAD MIAMI BEACH, FL 33139 305.674.8945
AA26000962

Project:
INTERIOR RENOVATIONS FOR THE
STANDARD MIAMI HOTEL
40 ISLAND AVENUE
MIAMI BEACH, FL 33139

Drawing Title
DEMOLITION PLAN

Drawn By	Issue Date
AJM	9.09.09
Checked By	**Scale**
AJM	1/4" = 1'-0"

A-3
Drawing No.

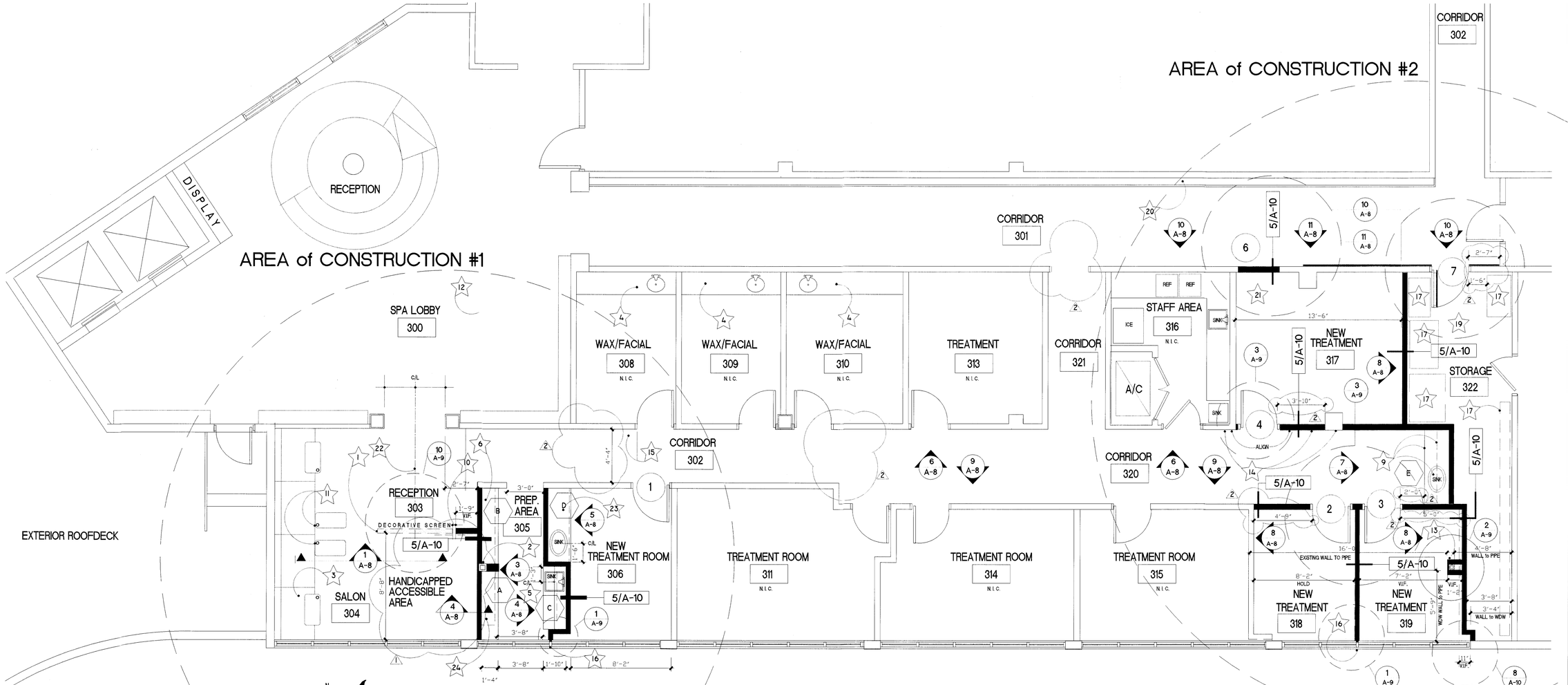

1 PARTIAL THIRD FLOOR SPA CONSTRUCTION PLAN

SCALE: 1/4" = 1'-0"

NOTES

1. 7'-11" H x 6'-1" W EXISTING DECORATIVE WHITE PATTERNED SCREEN
2. EXISTING 1-HR FIRE RATED DW PIPE ENCLOSURE
3. EXISTING SEATING TO REMAIN
4. EXISTING CABINETWORK TO REMAIN
5. NEW BASE CABINET TO MATCH EXISTING BARBER SHOP BLUE CABINETS AND STAINLESS STEEL COUNTERTOP
6. NEW WALL CABINETS W/O DOORS + STAINLESS STEEL COUNTERTOP
7. -
8.
9. RELOCATED EXISTING BASE + WALL HUNG CABINETWORK + SINK
10. INSTALL EXISTING SCREEN 3' FROM EDGE OF DW PARTITION
11. EXISTING FLOOR to CEILING TABLE SUPPORT COLUMNS TO REMAIN
12.
13. HOLD DRYWALL PARTITION AS TIGHT TO PIPE COLUMN AS POSSIBLE. SEE DETAIL SHOWING MINIMIZED SPACE AROUND EXISTING PIPE COLUMN SO THAT ROOM #319 WIDTH IS MAXIMIZED.

NOTES

14. GC TO VERIFY EXISTING EXISTING COLUMN LOCATION AND NOTIFY ARCHITECT IF COLUMN EXTENDS BEYOND LINE OF EXISTING CORRIDOR PANELS.
15. RE-LOCATED EXISTING GLASS DOOR + FRAME TO BE RE-INSTALLED AS INDICATED. EXACT LOCATION TO BE DETERMINED IN FIELD IN COORDINATION WITH EXISTING DEVICES IN CEILING.
16. GC TO ALIGN THE CENTERLINE OF THE PARTITION W/THE C/L OF THE WINDOW MULLION. VERIFY ANY DISCREPANCIES W/ARCHITECT
17. ALL STORAGE UNITS BY OWNER UNDER SEPARATE CONTRACT.
18. -
19. INSTALL EXISTING DOOR BEING RELOCATED FROM FORMER DOOR LOCATION #6. MATCH DETAILS AT DOOR #5
20. EXISTING FLOOR MOUNTED CONTINUOUS STRIP UP-LIGHTING ALONG ENTIRE LENGTH OF CORRIDOR TO REMAIN AS EXISTING..
21. INFILL FORMER DOOR OPENING WITH SIMILAR RATED WALL TO MATCH EXISTING ADJACENT.
22. CENTERLINE of DECORATIVE PANEL TO ALIGN WITH CENTERLINE of EXISTING ADJACENT.
23. NEW BASE + WALL CABINETS TO MATCH WAX/FACIAL ROOM CABINETS
24. NEW WALL CABINETS WITH DOORS AND LOCK AND STAINLESS STEEL COUNTERTOP

LEGEND

- EXISTING PARTITION TO REMAIN
- DECORATIVE SCREEN — EXISTING WHITE PLASTIC DECORATIVE SCREEN ALREADY MOUNTED IN 1X6 WOOD FRAME. SCREEN TO BE ATTACHED TO CEILING AND FLOOR AS SEE DETAIL
- NEW FULL HEIGHT PARTITION (TO CEILING AND) AT FORMER DOOR OPENING.
- 301 — DOOR TAG
- 311 — ROOM TAG
- 1 — NOTE TAG
- 5/A-10 — WALL PARTITION TAG
- 1 — MILLWORK TAG

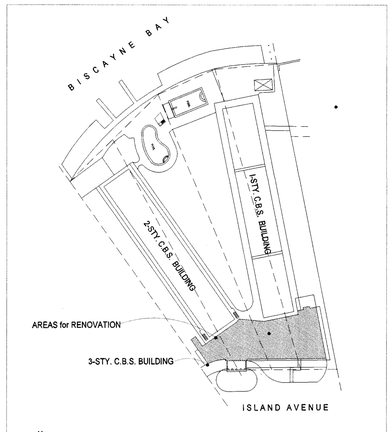

KEY LOCATION PLAN

NOT-TO-SCALE

1	9.13.10	PERMIT COMMENTS
2	10.29.10	PERMIT COMMENTS

Owner:
FERRADO LIDO, LLC
STANDARD / MIAMI
40 ISLAND WAY
MIAMI BEACH, FL 33139
tele: 305-673-1717

Architect:
ARTHUR J. MARCUS ARCHITECT P.A.
1450 LINCOLN ROAD
MIAMI BEACH, FL 33139
tele: 305-674-8945

MEP Engineering:
UCI ENGINEERING INC.
4247 S.W. 71st AVENUE
MIAMI, FL 33155
tele: 305-661-0800

Seal

ARTHUR J. MARCUS ARCHITECT, P.A.
1450 LINCOLN ROAD MIAMI BEACH, FL 33139 305.674.8945
A.A.26000962

Project:

INTERIOR RENOVATIONS FOR THE
STANDARD MIAMI HOTEL
40 ISLAND AVENUE
MIAMI BEACH, FL 33139

Drawing Title

CONSTRUCTION PLAN

Drawn By	Issue Date
AJM	9.09.09
Checked By	**Scale**
AJM	1/4" = 1'-0"

A-4
Drawing No.

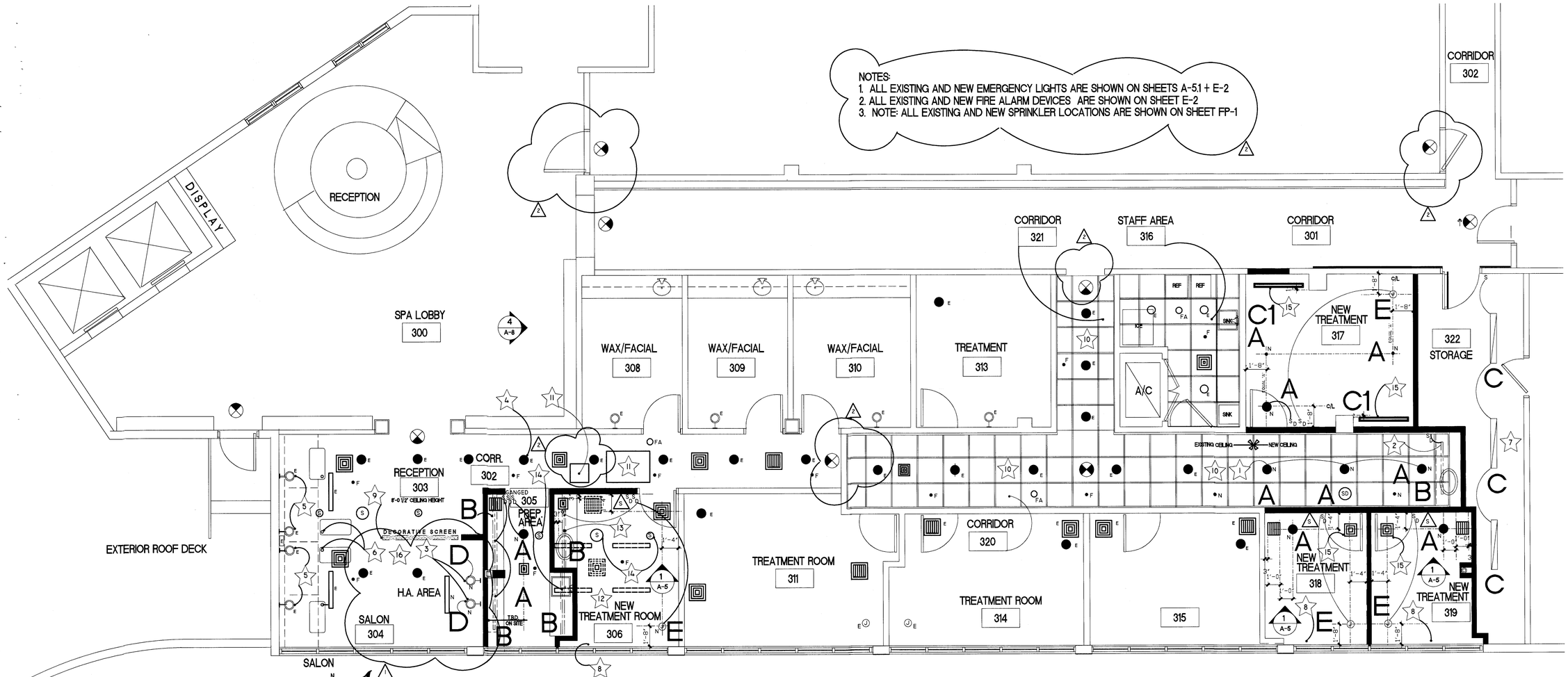

1 PARTIAL THIRD FLOOR SPA REFLECTED CEILING PLAN

SCALE: 1/4" = 1'-0"

LEGEND

N	NEW NARROW FLOOD FIXTURE TO MATCH EXISTING IN ADJACENT ROOMS
E	EXISTING NARROW FLOOD FIXTURE TO REMAIN
R	NEW LOCATION FOR EXISTING NARROW FLOOD FIXTURE
	NEW UNDERCABINET MOUNTED LIGHT FIXTURE
N	NEW WALL MOUNTED LIGHT FIXTURE TO MATCH EXISTING WALL MOUNTED FIXTURES ADJACENT IN SALON
E	EXISTING WALL MOUNTED LIGHT FIXTURE TO REMAIN
X	EXISTING WALL MOUNTED LIGHT FIXTURE TO BE REMOVED + RELOCATED.
E	EXISTING CEILING MOUNTED TRACK LIGHT TO BE REMOVED.
N	NEW CEILING MOUNTED TRACK LIGHT TO MATCH EXISTING.
S	NEW WALL MOUNTED SWITCH LOCATION. GANG MOUNT MULTIPLE BOXES TOGETHER. (MATCH FINISH OF EXISTING SWITCHES)
S_D	DIMMER SWITCH (MATCH FINISH OF EXISTING SWITCHES)
J	NEW CONCEALED JUNCTION BOX IN CLG BY GC. OWNER TO FURNISH NEW PENDANT MOUNTED LIGTH FIXTURE + GC TO INSTALL.
	EXISTING EXIT SIGN TO REMAIN
18	NOTE TAG
F	EXISTING CEILING MOUNTED FIRE SPRINKLER LOCATION REFER TO MEP DRAWINGS FOR NEW LAYOUT
FA	EXISTING CEILING MOUNTED FIRE ALARM LOCATION REFER TO MEP DRAWINGS FOR NEW LAYOUT
	EXISTING LOCATION A/C AIR SUPPLY GRILLS (SIZES VARY) REFER TO MEP DRAWINGS FOR NEW LAYOUT DASHED VERSION REFERS TO EXISTING LOCATIONS TO BE REMOVED.
	EXISTING LOCATION A/C RETURN AIR GRILL REFER TO MEP DRAWINGS FOR NEW LAYOUT DASHED VERSION REFERS TO EXISTING LOCATIONS TO BE REMOVED.
S	EXISTING LOCATION CEILING MOUNTED SPEAKER (NOTE THAT THERE ARE DIFFERENT SIZED EXISTING SPEAKERS)
E	WALL MOUNTED EMERGENCY LIGHT FIXTURE TO REMAIN
E	EXISTING CEILING DOWNLIGHTS W/LENS • STAFF AREA TO REMAIN.
S	WALL MOUNTED SPRINKLER HEADS INROOMS #316 + #319.
SD	NEW SMOKE DETECTOR LOCATION. SEE MEP DRAWINGS

FIXTURE SCHEDULE

TYPE	SYMBOL	DESCRIPTION
A	N	NEW NARROW FLOOD FIXTURE TO MATCH EXISTING IN ADJACENT ROOMS. 'LIGHTOLIER' FIXTURE #10521LV-1000LV - 50 WATT HALOGEN NARROW FLOOD 12 VOLT WITH WHITE FINISH.
B		NEW UNDER-CABINET LIGHT FIXTURE NOTE THAT EXISTING FIXTURE IS BEING RELOCATED IN CORRIDOR #320. MATCH EXISTING UNDERCABINET LIGHTING EXISTING IN ADJACENT ROOMS
C		EXISTING 4'-0"I TWO-TUBE FLUORESCENT FIXTURES WITH WIREGUARD PROTECTOR TO BE RE-USED IN NEW LOCATION AS SHOWN ON PLAN.
C1		NEW LINEAR AIR CEILING MOUNTED DIFFUSER. SEE MEP DRAWINGS.
D	N	NEW WALL MOUNTED LIGHT FIXTURE AT SALON TO MATCH EXISTING FIXTURES ON OPPOSITE WALL PROVIDED AND INSTALLED BY GC.
E	J	NEW CONCEALED JUNCTION BOX IN CLG BY GC. OWNER TO FURNISH NEW PENDANT MOUNTED LIGTH FIXTURE + GC TO INSTALL.
		2'-0" x 2'-0" CONCEALED SPLINE CEILING SYSTEM. GC TO MATCH EXISTING ADJACENT CEILING SYSTEM.

13 CABWORK IN RM 306 TO MATCH EXISTING CABWK IN WAX/FACIAL FACIAL RMS 308,309 + 310 W/LIGHTS ABOVE+BELOW WALL CABS.

14 GC TO REMOVE ALL EXISITNG CEILING MOUNTED SPEAKERS IN AREA OF PROPOSED ROOMS #305 + #306. NEW SUPPLY AND RETURN AIR GRILLS TO BE INSTALLED ACCORDING TO CENTERLINES

15 LINEAR DIFFUSER. FINAL SPECIFICATIONS SHOWN ON MEP DRAWINGS.

16 ALL WORK FOR NEW AND/OR RELOCATION OF CEILING MOUNTED SPEAKER SYSTEM TO B UNDER SEPARATE LOW VOLTAGE PERMIT FOR SUCH WORK

NOTES

1 ADD NEW CORRIDOR CEILING LIGHTS TO EXISTING SWITCHING

2 REINSTALL EXISTING UNDERCABINET LIGHTING AT NEW LOCATION OF RELOCATED CABINETWORK

3 NEW WALL LIGHTS TO BE INSTALLED ON SAME CIRCUIT AS WALL LIGHTS ON OPPOSITE WALL.

4 GC TO VERIFY EXACT POSITION OF EXISTING LIGHT FIXTURE IN FIELD DURING CONSTRUCTION AND ITS RELATIONSHIP TO ALIGNING WITH THE FIXTURES AT PREP AREA AND WHETHER THIS FIXTURE MAY REQUIRE RELOCATION

5 EXISTING WALL MOUNTED LIGHT FIXTURES TO REMAIN.

6 MOVEABLE MANICURE TABLES ON FLOOR TO CEILING SUPPORTS

7 EXISTING 6' x 4' TWO-TUBE FLUORESCENT LIGHT FIXTURES AT STORAGE ROOM TO BE REMOVED FROM CURRENT LOCATIONS AND RE-INSTALLED AS SHOWN ON PLAN.

8 GC TO PROVIDE BLOCKING FOR CONTINUOUS DRAPERY RODS ABOVE CEILING AT WINDOWS

9 GC TO PROVIDE BLOCKING ABOVE CEILING FOR ATTACHMENT OF DECORATIVE SCREEN

10 ALL EXISTING AND NEW LIGHTS AT CORRIDORS 320 + 321 TO BE PLACED ON DIMMERS

11 EXISTING CEILING MOUNTED ACCESS PANELS TO BE RELOCATED IF NECESSARY.

12 ROOM 306 TO HAVE WALL MTD SPRINKLERS + CEILING MOUNTED LINEAR DIFFUSERS TO MATCH EXISTING WAX/FACIAL RMS

KEY LOCATION PLAN

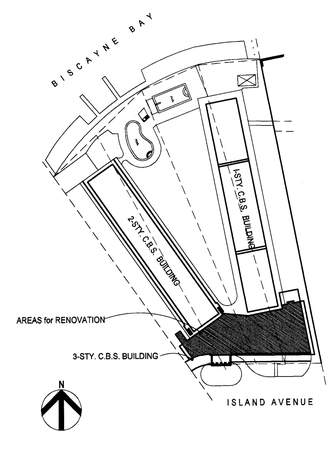

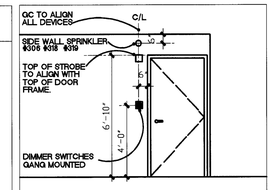

2 DEVICES

SCALE: 1/4" = 1'-0"

1	9.13.10 PERMIT COMMENTS
2	10.29.10 PERMIT COMMENTS

Owner:
FERRADO LIDO, LLC
STANDARD / MIAMI
40 ISLAND WAY
MIAMI BEACH, FL 33139
tele: 305-673-1717

Architect:
ARTHUR J. MARCUS ARCHITECT P.A.
1450 LINCOLN ROAD
MIAMI BEACH, FL 33139
tele: 305-674-8945

MEP Engineering:
UCI ENGINEERING INC.
4247 S.W. 71st AVENUE
MIAMI, FL 33155
tele: 305-661-0800

Seal

ARTHUR J. MARCUS ARCHITECT, P.A.
1450 LINCOLN ROAD MIAMI BEACH, FL 33139 305.674.8945
A.A.26000662

Project:

INTERIOR RENOVATIONS FOR THE
STANDARD MIAMI HOTEL
40 ISLAND AVENUE
MIAMI BEACH, FL 33139

Drawing Title

REFLECTED CEILING PLAN

Drawn By	Issue Date
AJM	9.09.09
Checked By	Scale
AJM	1/4" = 1'-0"

A-5
Drawing No.

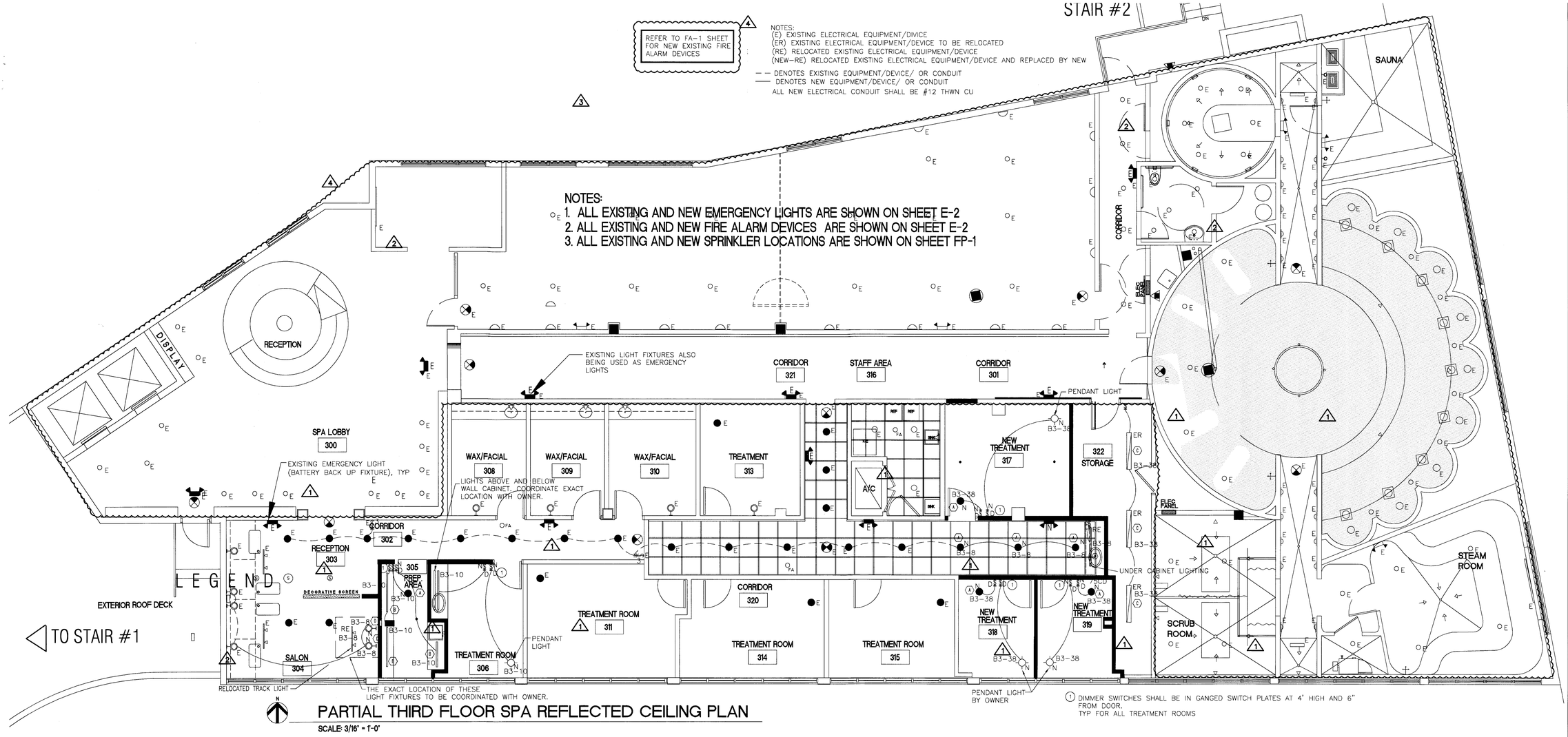

PARTIAL THIRD FLOOR SPA REFLECTED CEILING PLAN

SCALE: 3/16" = 1'-0"

LEGEND

E	EXISTING EMERGENCY LIGHTING FIXTURE TO REMAIN. (BATTERY BACKUP FIXTURE)
N	NEW EMERGENCY LIGHTING FIXTURE TO REMAIN. (BATTERY BACKUP FIXTURE)
	EXISTING CONSTRUCTION TO REMAIN
	NEW CONSTRUCTION

KEY LOCATION PLAN

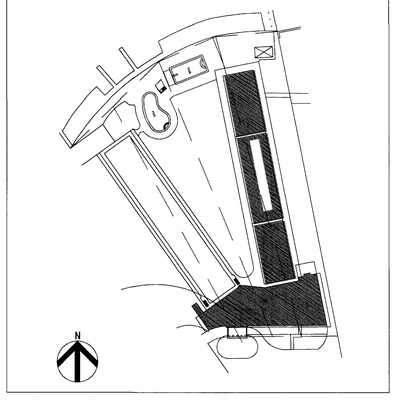

1	09/07/10	B.D.C
2	09/24/10	B.D.C
3	10/07/10	B.D.C
4	10/26/10	B.D.C

Owner:
STANDARD / MIAMI
40 ISLAND WAY
MIAMI BEACH, FL 33139
tele: 305-673-1717

Architect:
ARTHUR J. MARCUS ARCHITECT P.A.
1450 LINCOLN ROAD
MIAMI BEACH, FL 33139
tele: 305-674-8945

MEP Engineering:
UCI ENGINEERING INC.
4247 S.W. 71st AVENUE
MIAMI, FL 33155
tele: 305-661-0800

Seal

ARTHUR J. MARCUS ARCHITECT, P.A.
1450 LINCOLN ROAD MIAMI BEACH, FL 33139 305.674.8945
AA26000962

Project:

INTERIOR RENOVATIONS FOR THE
STANDARD MIAMI HOTEL
FERRADO LIDO LTD
40 ISLAND AVENUE
MIAMI BEACH, FL 33139

Drawing Title
EMERGENCY LIGHTING PLAN

Drawn By	Issue Date
AJM	10.29.10
Checked By	**Scale**
AJM	1/4" = 1'-0"

A-5.1

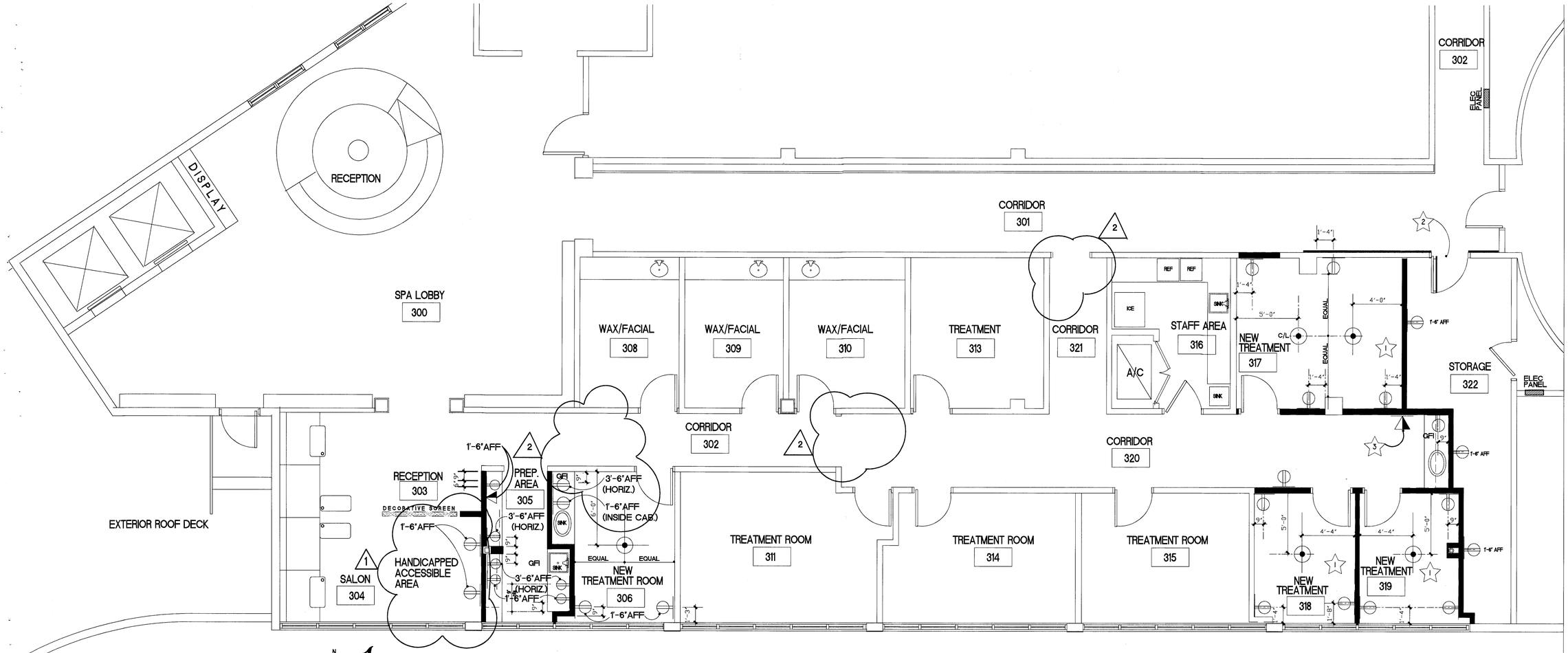

1 PARTIAL THIRD FLOOR SPA TELE/ELECTRICAL PLAN

SCALE: 1/4" = 1'-0"

LEGEND

SYMBOL	DESCRIPTION
	NEW WALL MOUNTED DUPLEX ELECTRICAL OUTLET
	NEW WALL MOUNTED QUAD ELECTRICAL OUTLET
GFI	NEW WALL MOUNTED DUPLEX GFI ELECTRICAL OUTLET
	NEW WALL MOUNTED TELEPHONE/DATA OUTLET
	NEW FLOOR MOUNTED DUPLEX ELECTRICAL OUTLET
TV	WALL MOUNTED CABLE TELEVISION OUTLET
T	THERMOSTAT LOCATION
ELEC PANEL	ELECTRICAL PANEL LOCATION
J	JUNCTION BOX FOR NEW APPLIANCE

NOTES

1. ALL ELECTRICAL OUTLETS TO BE MOUNTED AT 1'-6"H UNLESS OTHERWISE NOTED.
2. RELOCATE + REINSTALL EXISTING EMERGENCY LIGHT FIXTURE TO NEW LOCATION. FINAL LOCATION T.B.D. IN FIELD.
3. EXACT LOCATION FOR TELE/DATA OUTLET TO BE DETERMINED IN FIELD.

KEY LOCATION PLAN

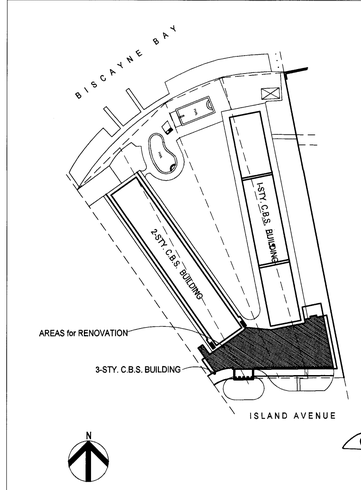

12/14/10

1	9.13.10	PERMIT COMMENTS
2	10.29.10	PERMIT COMMENTS

Owner:
FERRADO LIDO, LLC
STANDARD / MIAMI
40 ISLAND WAY
MIAMI BEACH, FL 33139
tele: 305-673-1717

Architect:
ARTHUR J. MARCUS ARCHITECT P.A.
1450 LINCOLN ROAD
MIAMI BEACH, FL 33139
tele: 305-674-8945

MEP Engineering:
UCI ENGINEERING INC.
4247 S.W. 71st AVENUE
MIAMI, FL 33155
tele: 305-661-0800

Seal

10.29.10

ARTHUR J. MARCUS ARCHITECT, P.A.
1450 LINCOLN ROAD MIAMI BEACH, FL 33139 305.674.8945
A.A.26000362

Project:

INTERIOR RENOVATIONS FOR THE
STANDARD MIAMI HOTEL
40 ISLAND AVENUE
MIAMI BEACH, FL 33139

Drawing Title
FURNITURE TELE / ELECTRIC PLAN

Drawn By	Issue Date
AJM	9.09.09
Checked By	Scale
AJM	1/4" = 1'-0"

A-6
Drawing No.

MILLWORK SCHEDULE

	MILLWORK NUMBER	ROOM NAME	ROOM #	CNTRTOP MATERIAL	CABINET MATERIAL	HARDWARE	TYPE	FINISH	REMARKS
MILLWORK	A-1	PREP AREA	305	-	P. LAM.	1	WALL CABINET	'PIONITE' FRENCH BLUE #SB005L PLASTIC LAMINATE	GC TO SUBMIT SAMPLE FOR APPROVAL.
	A-2	PREP AREA	305	ST. STEEL	-	-	ST. STEEL COUNTERTOP		
	B-1	PREP AREA	305	-	P. LAM.	-	WALL MOUNTED OPEN SHELVING	'PIONITE' FRENCH BLUE #SB005L PLASTIC LAMINATE	GC TO SUBMIT SAMPLE FOR APPROVAL.
	B-2	PREP AREA	305	ST. STEEL	P. LAM.	-	ST. STEEL COUNTERTOP		
	C-1	PREP AREA	305	-	P. LAM.	-	WALL MOUNTED OPEN SHELVING	'PIONITE' FRENCH BLUE #SB005L PLASTIC LAMINATE	GC TO SUBMIT SAMPLE FOR APPROVAL.
	C-2	PREP AREA	305	ST. STEEL	P. LAM.	-	ST. STEEL COUNTERTOP OVER BASE CABINET		
	D-1	NEW TREATMENT RM	306	P. LAM.	P. LAM.	2	'IKEA' ABSTRAKT SERIES CABINETS	COLOR: WHITE	CABWK TO MATCH EXISTING WAX/FACIAL RMS ADJACENT
	D-2	NEW TREATMENT RM	321			-			
	E								
	E	CORRIDOR #321	321	RELOCATE EXISTING BASE AND WALL MOUNTED CABINET W/ BACKSPLASH TO NEW LOCATION AT CORRIDOR.					

HARDWARE NOTE #1: RE-USE EXISTING HARDWARE FROMBARBER SHOP TO BE DEMOLISHED
HARDWARE NOTE #2: CABINET DOOR + DRAWER HANDLES TO BE 'HEWI' NYLON PULL CAT. #158.73.0.52 - CONFIRM COLOR WITH EXISTING IN ADJACENT ROOMS

DOOR SCHEDULE

FLOOR	DOOR NUMBER	ROOM NAME	ROOM #	IMPACT-RESISTANT	DOOR TYPE	HARDWARE SET	SIZE PAIR	SIZE WIDTH	SIZE HEIGHT	SIZE THICKNESS	UNDERCUT	MATERIAL	FINISH	LABEL	DESCRIPTION BI-FOLD	PANEL	LOUVERED	FLUSH	GLASS	SLID MIRROR	POCKET	BYPASS	ASTRAGAL	ROLL-UP	FRAME MATERIAL	FRAME FINISH	THRESHOLD	STONE	MARBLE	ALUMINUM	CLOSER	GLAZED SIDELIGHT	REMARKS
LEVEL THREE	1	NEW TREATMENT ROOM	306		A	2		3'-0"	6'-8"	1-5/8"	1/2"	SC WD	PTD					•							STL.	PTD.							MATCH INSTALLATION OF TREATROOM DOORS ADJACENT.
	2	NEW TREATMENT ROOM	318		A	2		3'-0"	6'-8"	1-5/8"	1/2"	SC WD	PTD					•							STL.	PTD.							MATCH INSTALLATION OF TREATROOM DOORS ADJACENT.
	3	NEW TREATMENT ROOM	319		A	2		3'-0"	6'-8"	1-5/8"	1/2"	SC WD	PTD					•							STL.	PTD.							MATCH INSTALLATION OF TREATROOM DOORS ADJACENT.
	4	NEW TREATMENT ROOM	317		A	2		3'-0"	6'-8"	1-5/8"	1/2"	SC WD	PTD					•							STL.	PTD.							MATCH INSTALLATION OF TREATROOM DOORS ADJACENT.
	5	CORRIDOR #321	321		-	-		EXISTING DOOR TO REMAIN																									
	6	NEW TREATMENT ROOM	317		-	2		SEAL EXISTING OPENING AND RELOCATE DOOR.																									
	7	STORAGE ROOM	322		B	-		RE-USE EXISTING DOOR + RELOCATE																	STL.	PTD.		•		•	•		NEW LOCATION FOR EXISTING DOOR
	8	CORRIDOR	302		C	-		REMOVE TWO EXISTING CORRIDOR DOOR + FRAME + SIDELIGHT •																						•	•		NEW LOCATION FOR EXISTING DOOR

1 HARDWARE SETS FOR ALL DOORS TO BE PASSAGE LATCHSET, TO MATCH EXISTING HARDWARE ON NEARBY SIMILAR DOORS
2 DOOR HARDWARE TO BE 'HAFELE' TUBULAR PRIVACY LATCH TO MATCH EXISTING SIMILAR DOOR HARDWARE ADJACENT.

FINISH SCHEDULE

	ROOM NAME	ROOM #	WALLS NORTH	WALLS EAST	WALLS SOUTH	WALLS WEST	FLOOR	BASE	CEILING HEIGHT	CEILING	REMARKS
LEVEL ONE	CORRIDOR	301	EXIST. TO REMAIN	EXIST. TO REMAIN	EXIST. TO REMAIN	EXIST. TO REMAIN	EXIST. TO REMAIN	(3)	EXIST. WD. SLAT CEILING TO REMAIN	EXIST. WD. SLAT. CEILING SYSTEM TO REMAIN	TOUCH-UP EXISTING WOOD SLATS WHERE NEEDED-MATCH EXIST. FINISH
	CORRIDOR	302	-	-	-	-	EXIST. TO REMAIN	(3)	EXISTING TO REMAIN	EXISTING TO REMAIN	TOUCH-UP PAINT AS NEEDED
	RECEPTION	303	PTD DW (W-1)	PTD DW (W-1)	PTD DW (W-1)	PTD DW (W-1)	EXIST. TO REMAIN	(3)	8'-0 1/2"	C-1	PATCH, FILL + REPAIR EXISTING EPOXY FLOOR AND PAINT ENTIRE AREA.
	SALON	304	PTD DW (W-1)	PTD DW (W-1)	PTD DW (W-1)	PTD DW (W-1)	F-2	(3)	8'-0 1/2"	C-1	PATCH, FILL + REPAIR EXISTING EPOXY FLOOR AND PAINT ENTIRE AREA.
	PREPARATION AREA	305	PTD DW (W-1)	PTD DW (W-1)	PTD DW (W-1)	PTD DW (W-1)	F-2	(3)	8'-0 1/2"	C-1	PATCH, FILL + REPAIR EXISTING EPOXY FLOOR AND PAINT ENTIRE AREA.
	NEW TREATMENT ROOM	306	PTD DW (W-2)	PTD DW (W-2)	PTD DW (W-2)	PTD DW (W-2)	F-2	(3)	8'-0 1/2"	C-1	PATCH, FILL + REPAIR EXISTING EPOXY FLOOR AND PAINT ENTIRE AREA.
	NEW TREATMENT ROOM	317	PTD DW (W-2)	W-4	PTD DW (W-2)	PTD DW (W-2)	F-1	(3)	8'-3"	C-1	
	NEW TREATMENT ROOM	318	PTD DW (W-2)	PTD DW (W-2)	PTD DW (W-2)	W-4	F-1	(3)	8'-3"	C-1	
	NEW TREATMENT ROOM	319	PTD DW (W-2)	W-4	PTD DW (W-2)	PTD DW (W-2)	F-1	(3)	8'-3"	C-1	
	CORRIDOR	320	W-3	CABINETS	WD PANELS	2) EXISTING DOOR	F-1	(3)	8'-0" (ALIGN W/EXIST. ADJ. DW CEILING)	C-1	SEE ELEVATIONS 5/A-8 + 9/A-8 FOR EXTENT OF NEW WOOD PANELS
	STORAGE ROOM	322	PTD DW (W-2)	PTD DW (W-2)	PTD DW (W-2)	PTD DW (W-2)	EXIST. TO REMAIN	NONE	8'-3"	C-1	

(1) The wood in the treatment rooms is to be sand-blasted in order to make the grain stand out. GC and sub-contractors to verify the wood species and to match existing.
(2) The wood in the Corridors is to match the existing wood grain adjacent. GC and sub-contractors to verify the wood species and to match existing.
(3) Match existing 2-1/2" high wood base adjacent

FIXTURE SCHEDULE

	NUMBER	ROOM NAME	ROOM #	EQUIPMENT NAME	SPECIFICAATION
EQUIPMENT	A	PREP AREA	305	UTILITY SINK	ELKAY #ESSB2319C W/#14 GAUGE, TYPE 304 STAINLESSS STEEL SERVICE SINK WITH 1-3/4" RADIUS VERTICAL AND HORIZONTAL COVED CORNERS: WITH FULL LENGTH 1'-0" HIGH BACK-SPLASH.
	B	PREP AREA	318	FAUCET • UTILITY SINK	ELKAY #LK997DR03T4H COMMERCIAL WALL MOUNTED FAUCET. FINISH: CHROME, W/ TWO- 4" WRISTBLADE HANDLES,
	C	NEW TREATMENT ROOM	306	SINK	SINK TO MATCH SINKS AT EXISTING WAX/FACIAL ROOMS WHITE PORCELAIN SINK MFR: SIMAS ACQUA fi-13 15.5 cm x 31 cm
	D	NEW TREATMENT ROOM	306	FAUCET	FAUCET TO MATCH EXISTING CHROME FAUCETS AT WAX / FACIAL ROOMS.
	E	SALON	304	MANICURE POLE-MOUNT TABLE	HAFELE: SUPPORT POLE: GC TO PROVIDE BLOCKING AT CEILING 50 mm DIA POLES (2625mm) CAT. NO. 815.00.226 STEEL W/ CHROME PLATING www.hafele.com
	F	SALON	304	MANICURE POLE-MOUNT TABLE	HAFELE: TABLE BRACKET FOR POLE SYSTEM: www.hafele.com SWIVEL-- ARM MOUNT (10-1/8"W x 11-1/2"D x 2"H) CAT. #815.03.210 STEEL W/ CHROME PLATING HAFELE: 310-525--2205
	G	SALON	304	MANICURE POLE-MOUNT TABLE	HAFELE: GLASS BOTTOM SHELF W/ SWIVEL ARM (10 1/4" DIA) CAT. #815.08.210 STEEL W/CHROME PLATING www.hafele.com
	H	SALON	304	MANICURE POLE-MOUNT TABLE	HAFELE: TABLE LEG WITH CASTER SYSTEM www.hafele.com 60mm BRUSHED STEEL CAT. #635.60.460

FINISH SPECIFICATIONS

No.	Rm#	Mat'L	Color	Size	Manufacturer	Remarks
FLOORING						
F-1	317, 318 + 319	CORK	DARK	12" x 12" x 3/16" thick	EXPANKO CORK www.expanko.com	PURCHASE UNFINISHED. FINISH: GLOSSY
F-2	304, 305+ 306	EPOXY	6786 CLOUDLESS	NA	SHERWIN WILLIAMS www.sherwin-williams.com	MATCH PANTONE COLOR
WALL FINISHES						
W-1	304 + 305	PAINT	B31 W4451	NA	SHERWIN WILLIAMS www.sherwin-williams.com	INTERIOR LATEX SEMI-GLOSS
W-2	306 317, 318 + 319	PAINT	WHITE	NA	SHERWIN WILLIAMS www.sherwin-williams.com	INTERIOR LATEX SEMI-GLOSS
W-3	320	WHITE OAK PLYWOOD	WHITE OAK	4'-0" x 8'-0" x 1/2"	ANDERSON PLYWOOD	FINISH: CLEAR SATIN
W-4	317, 318 + 319	SAND BLASTED PLYWOOD	NATURAL	4'-0" x 8'-0" x 1/2"	ANDERSON PLYWOOD	FINISH: CLEAR SATIN
W-5	301	LINEAR WOOD GRILL	-	-	RULON www.rulon.com	LINEAR OPEN PROFILE
W-6	303	SCREEN DIVIDER	WHITE	8'-0" H x 6'-0" L	MODERNICA	SCREEN IS ONSITE AND READY FRO RE-USSE.
W-7	305	PAINT	BLUE	NA	SHERWIN WILLIAMS www.sherwin-williams.com	INTERIOR LATEX GLOSS ENAMEL OWNER TO SELECT COLOR DURING CONST.
CEILING						
C-1	304 + 305	PAINTED DRYWALL	WHITE	NA	SHERWIN WILLIAMS www.sherwin-williams.com	INTERIOR LATEX FLAT FINISH
C-2	304 + 305	PAINTED DRYWALL	821 W00251	NA	SHERWIN WILLIAMS www.sherwin-williams.com	INTERIOR LATEX FLAT FINISH
C-3	304 + 305	ACOUSTIC CLG SYS. TILES	MATCH EXISTING	2'-0" x 2'-0"		MATCH EXISTING
C-4	306 317, 318 + 319	PAINT	WHITE	NA	SHERWIN WILLIAMS www.sherwin-williams.com	INTERIOR LATEX SEMI-GLOSS

NOTE: ALL FINISHES TO EB VERIFIED AND APPROVED BY CLIENT DURING CONSTRUCTION.

DOOR TYPES

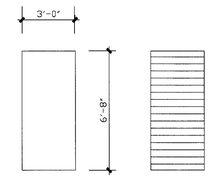

(A) NEW TREATMENT ROOM DOOR TO MATCH EXISTING ADJACENT

(B) EXISTING DOOR W/ WOOD VENT GRILL FOR RELOCATION AT CORRIDOR

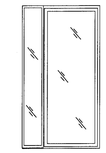

(C) EXISTING METAL FRAME AND GLASS DOOR TO BE RELOCATED TO NEW LOCATION AT CORR 302.

INTERIOR FLAME-SPREAD FINISH CLASSIFICAT'N

PER NFPA 101 - LIFE SAFETY CODE 2006
SECTION 29.3.3.2 INTERIOR WALL & CEILING FINISHES for EXISTING HOTELS WITH AN APPROVED AUTOMATIC SPRINKLER SYSTEM

EXIT ENCLOSURES
CLASS 'A, B or C' INTERIOR WALL & CLG FIN FLAME SPREAD 0-200, (NEW APPLICATIONS) SMOKE DEVELOPED 0-450.

LOBBIES & CORRIDORS
CLASS 'A or B' INTERIOR WALL & CLG FIN FLAME SPREAD 0-200, (NEW APPLICATIONS) SMOKE DEVELOPED 0-450.

OTHER SPACES
CLASS 'A or B' INTERIOR WALL & CLG FIN FLAME SPREAD 0-200, (NEW APPLICATIONS) SMOKE DEVELOPED 0-450.

INTERIOR FLOOR FINISHES
CLASS I or CLASS II INTERIOR FLOOR FINISH WITH CRITICAL RADIANT FLUX OF NOT LESS THAN 0.22 W/cm² BUT LESS THAN 0.45 W/cm² SMOKE DEVELOPED 0-450.

2/4/10

1	10.29.10	PERMIT COMMENTS

Owner:
FERRADO LIDO, LLC
STANDARD / MIAMI
40 ISLAND WAY
MIAMI BEACH, FL 33139
tele: 305-673-1717

Architect:
ARTHUR J. MARCUS ARCHITECT P.A.
1450 LINCOLN ROAD
MIAMI BEACH, FL 33139
tele: 305-674-8945

MEP Engineering:
UCI ENGINEERING INC.
4247 S.W. 71st AVENUE
MIAMI, FL 33155
tele: 305-661-0800

Seal

ARTHUR J. MARCUS ARCHITECT, P.A.
1450 LINCOLN ROAD MIAMI BEACH, FL 33139 305.674.8945
AA26000962

Project:

INTERIOR RENOVATIONS FOR THE
STANDARD MIAMI HOTEL
40 ISLAND AVENUE
MIAMI BEACH, FL 33139

Drawing Title
SCHEDULES

Drawn By: AJM
Issue Date: 9.09.09
Checked By: AJM
Scale: 1/4" = 1'-0"

A-7
Drawing No.

NOTES

1. EXISTING BANQUETTE SEATING TO REMAIN
2. EXISTING SUPPORT POLE + MOVEABLE TABLE TO REMAIN.
3. NEW SUPPORT POLE TO MATCH EXISTING W/ MATCHING MOVABLE COUNTER
4. 1
5. EXISTING WHITE DECORATIVE SCREEN + FRAME TO BE RE-USED AS NEW FIXED DECORATIVE SCREEN. INSTALL IN VERTICAL POSITION.
6. SINK
7. UNDERCABINET LIGHTING (TYPICAL) SEE DETAIL
8. EDGE OF DW PARTITION ENCLOSING PIPE COLUMN
9. TOP OF COUNTER AT 36" A.F.F. AND OPEN BENEATH FOR CART PARKING AREA. 14" WIDE COUNTERTOP

9A. REFRIGERATOR TO BE PROVIDED BY OWNER + INSTALLED BY GC.

10. WALL MTD P.LAM. CABINETS WITH DOORS + LOCKS BLUE P.LAM TO MATCH EXISTING ADJACENT.
11. WALL HUNG P.LAM. OPEN CABINETS WITH ADJUSTABLE SHELVES.
12. DUPLEX ELECTRICAL OUTLET
13. STAINLESS STEEL SINK W/INTEGRAL S.ST. BACKSPLASH SEE EQUIPMENT SCHEDULE ON SHEET A-7
14. NEW STAINLESS STEEL COUNTERTOP
15. WALL CABINETS, BASE CABINETS + FILLERS TO BE 'IKEA' ABSTRAKT SERIES COLOR: WHITE TO MATCH TREATMENT ROOMS 308 / 309 / 310
16. COUNTERTOP + BACKSPLASH W/PALM WOOD TO MATCH TREATMENT ROOMS 308 / 309 / 310
17. EXISTING CABINETS + WD BACKSPLASH RE-LOCATED TO NEW CORRIDOR LOCATION
18. SAND-BLASTED WHITE OAK 4' x 8' PLYWOOD PANELS INSTALLED INDICATED W/NATURAL FINISH TO MATCH EXISTING PANELS IN TREATMENT ROOM
19. EXISTING DOOR TO HAMMAM TO REMAIN
20. WALL MOUNTED FAUCET. SEE EQUIPMENT SCHEDULE ON A-7.
21. LIGHT FIXTURES AT TOP + BOTTOM OF WALL MOUNTED CABINET.
22. EXISTING DOOR TO STORAGE ROOM TO BE REMOVED AND RELOCATED. THIS OPENING TO BE CLOSED. REMOVED WALL TO BE RE-CLAD WITH PANELS REMOVED FROM FAR END OF ELEVATION.
23. EXISTING DECORATIVE WHITE SCREEN W/ EXISTING WOOD FRAME TO BE ATTACHED TO FLOOR + CEILING.
24. SIGNAGE BY OWNER (NOT INCLUDED IN CONTRACT FOR CONSTRUCTION)
25. CENTERLINE OF PANEL JOINT TO ALIGN WITH CENTERLINE OF DOOR.
26. P. LAM. BASE CABINET WITH SINK + ST. STEEL COUNTERTOP
27. SINK TO MATCH EXISTING IN WAX/FACIAL ROOMS
28. FAUCET TO MATCH EXISTING IN WAX/FACIAL ROOMS
29. DUPLEX ELECTRICAL OUTLET INSTALLED HORIZONTALLY. AS INDICATED
30. SEE DETAIL ILLUSTRATING THIS ATTACHMENT
31. BASE + WALL CABS TO MATCH EXISTING AT WAX/FACIAL ROOMS.
32. MATCH EXISTING 2-1/2" H WOOD BASE PROFILE
33. ONE PANEL - NO JOINT
34. 1/2" DIA. HALF-ROUND WOOD MOULDING AT ALL WD. PANEL JOINTS MATCH DETAIL IN EXISTING ROOMS #311 + #314.

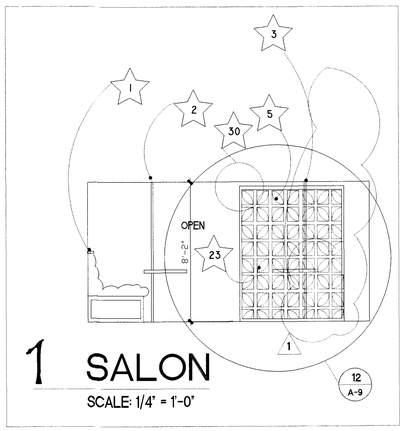

1 SALON
SCALE: 1/4" = 1'-0"

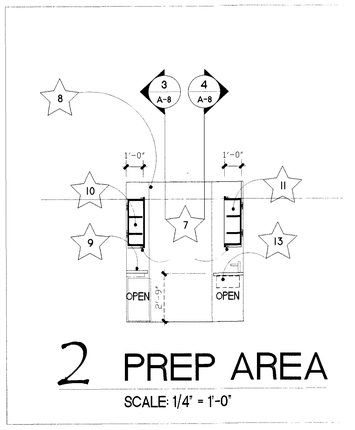

2 PREP AREA
SCALE: 1/4" = 1'-0"

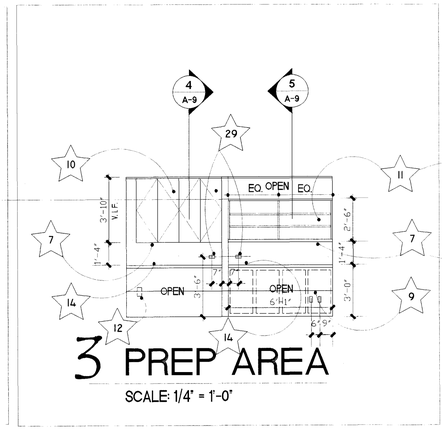

3 PREP AREA
SCALE: 1/4" = 1'-0"

NOTE: ALSO REFER TO DETAILS 8 + 9 / A-9

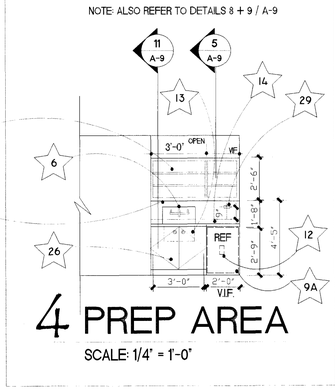

4 PREP AREA
SCALE: 1/4" = 1'-0"

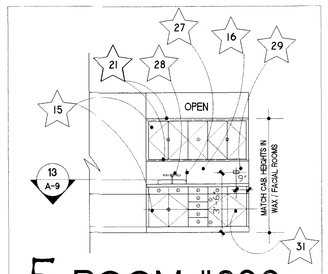

5 ROOM #306
SCALE: 1/4" = 1'-0"

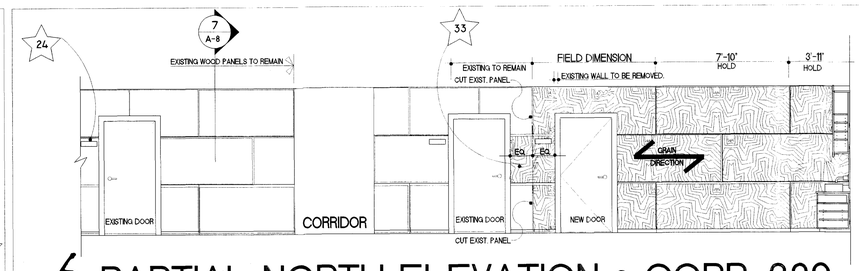

6 PARTIAL NORTH ELEVATION @ CORR. 320
SCALE: 1/4" = 1'-0"

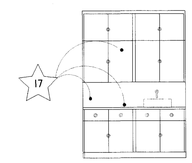

7 CORR #320
SCALE: 1/4" = 1'-0"

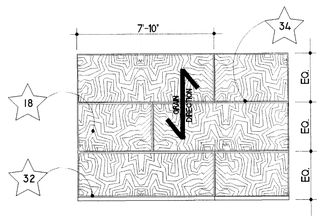

8 TREATMENT RMS
SCALE: 1/4" = 1'-0" 317, 318 + 319

NOTE:
DETAILS OF:
DOOR JAMBS
PANEL JOINTS
BASEBOARDS
GRAIN DIRECTION
GRAIN FINISH
etc.
SHALL MATCH
EXISTING ADJACENT.
(TYPICAL)

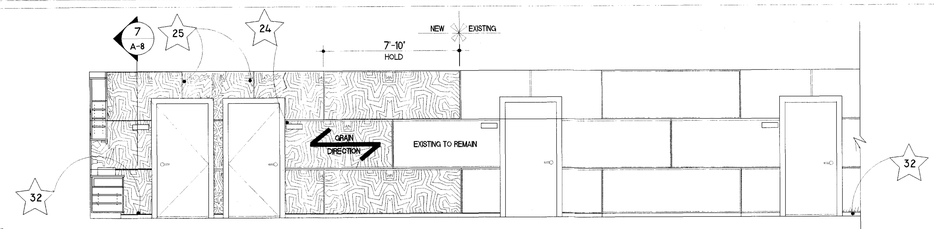

9 PARTIAL SOUTH ELEVATION @ CORR. 320
SCALE: 1/4" = 1'-0"

CORRIDOR #301

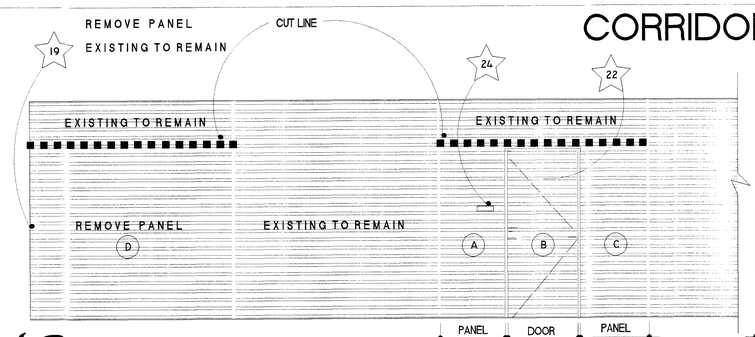

10 EXIST. ELEVATION
SCALE: 3/8" = 1'-0"

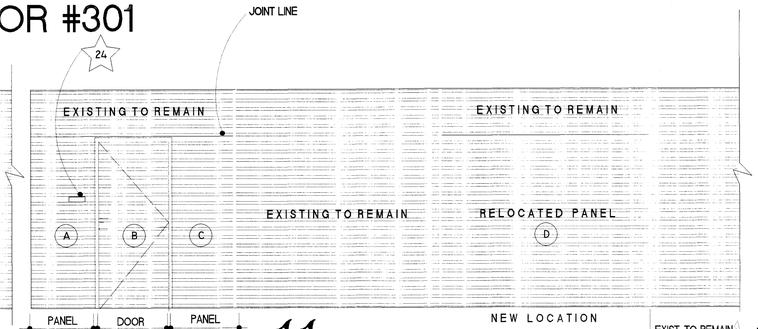

11 NEW ELEVATION
SCALE: 3/8" = 1'-0"

12/14/10

No.	Date	Revision
1	9.13.10	PERMIT COMMENTS

Owner:
FERRADO LIDO, LLC
STANDARD / MIAMI
40 ISLAND WAY
MIAMI BEACH, FL 33139
tele: 305-673-1717

Architect:
ARTHUR J. MARCUS ARCHITECT P.A.
1450 LINCOLN ROAD
MIAMI BEACH, FL 33139
tele: 305-674-8945

MEP Engineering:
UCI ENGINEERING INC.
4247 S.W. 71st AVENUE
MIAMI, FL 33155
tele: 305-661-0800

Seal

ARTHUR J. MARCUS ARCHITECT, P.A.
1450 LINCOLN ROAD MIAMI BEACH, FL 33139 305.674.8945
AA26000962

Project:
INTERIOR RENOVATIONS FOR THE
STANDARD MIAMI HOTEL
40 ISLAND AVENUE
MIAMI BEACH, FL 33139

Drawing Title
INTERIOR ELEVATIONS

Drawn By: AJM
Issue Date: 9.09.09
Checked By: AJM
Scale: 1/4" = 1'-0"
Drawing No.: A-8

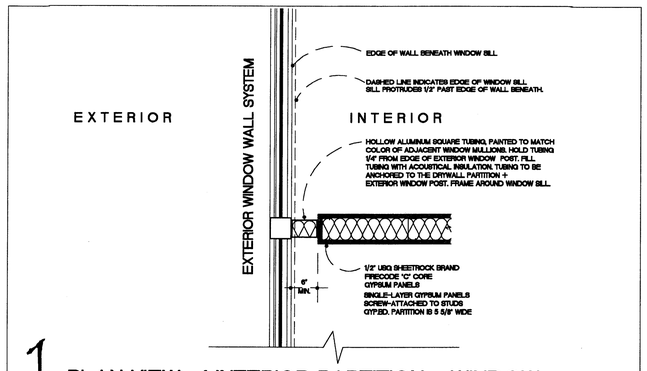

1 PLAN VIEW of INTERIOR PARTITION @ WINDOW
NOT-TO-SCALE

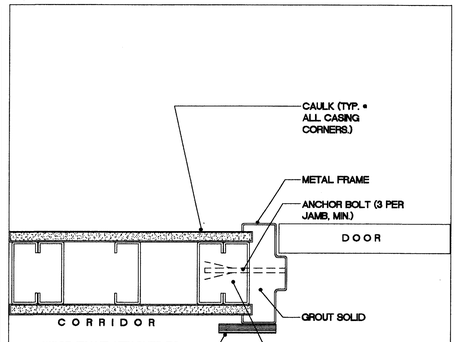

3 TYP DOOR JAMB @ CORR. 320

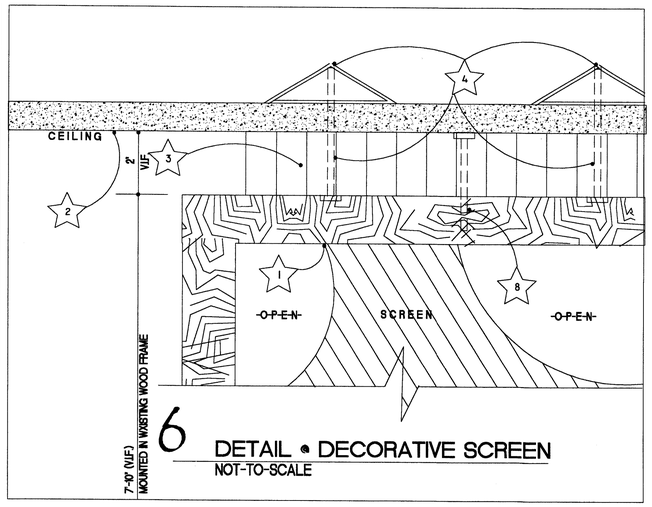

6 DETAIL @ DECORATIVE SCREEN
NOT-TO-SCALE

NOTES

1. EXISTING WOOD FRAME ATTACHED TO DECORATIVE SCREEN.
2. EXISTING PTD. DRYWALL CEILING TO REMAIN.
3. NEW FIRE-RATED WOOD SHIM ATTACHED SECURELY TO CEILING W/TOGGLE BOLTS WITH CONCEALED ATTACHMENT HIDDEN BY DECORATIVE FRAME ATTACHED ATOP SHIM
4. TOGGLE BOLT ATTACHING SHIM TO BLOCKING ABOVE CEILING.
5. FLOORING
6. NEW FIRE-RATED WOOD SHIM ATTACHED SECURELY TO CONCRETE FLOOR WITH CONCEALED 'TAPCON' ATTACHMENT DECORATIVE FRAME ATTACHED TO SHIM
7. 1 1/4" DIA. TAPCON W/MIN 1 3/4" IMBEDMENT IN CONCRETE FLOOR SLAB.
8. CONCEALED SCREWS TO ATTACH DECORATIVE FRAME GC TO COORDINATE FINAL INSTALLATION WITH OWNER AND ARCHITECT IN FIELD.

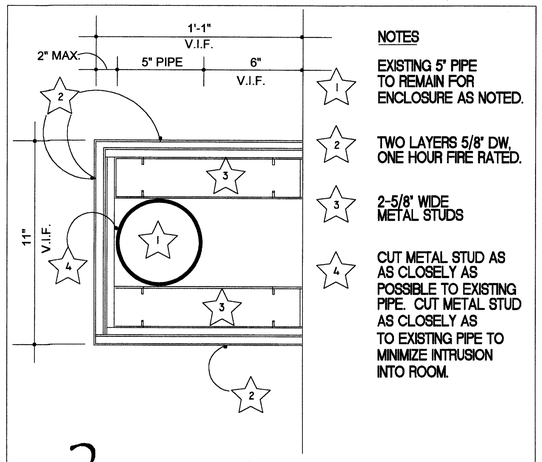

NOTES

1. EXISTING 5" PIPE TO REMAIN FOR ENCLOSURE AS NOTED.
2. TWO LAYERS 5/8" DW, ONE HOUR FIRE RATED.
3. 2-5/8" WIDE METAL STUDS
4. CUT METAL STUD AS AS CLOSELY AS POSSIBLE TO EXISTING PIPE. CUT METAL STUD AS CLOSELY AS TO EXISTING PIPE TO MINIMIZE INTRUSION INTO ROOM.

2 PIPE ENCLOSURE @ RM 319

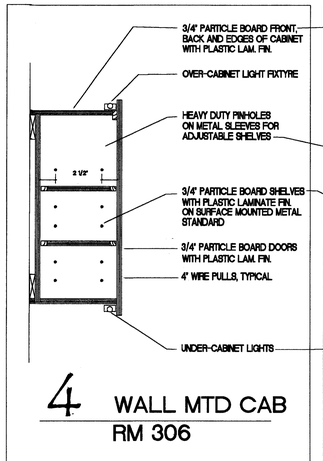

4 WALL MTD CAB
RM 306

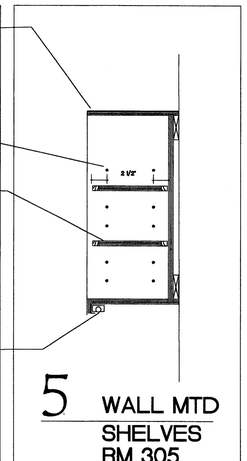

5 WALL MTD SHELVES
RM 305

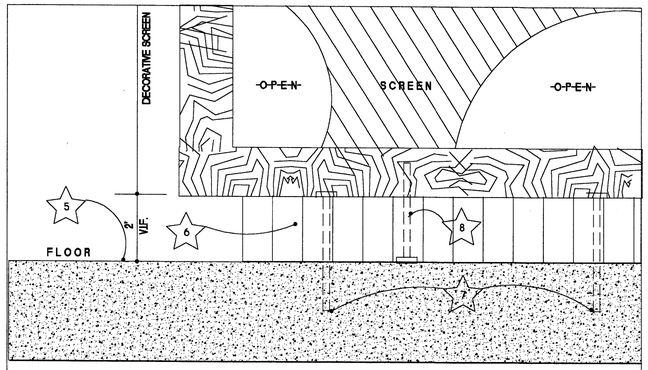

7 DETAIL @ DECORATIVE SCREEN
NOT-TO-SCALE

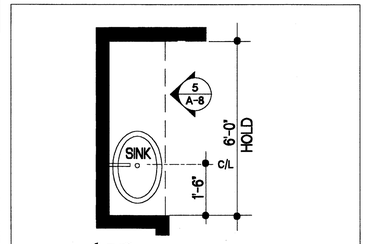

13 PLAN @ RM 306
NOT-TO-SCALE

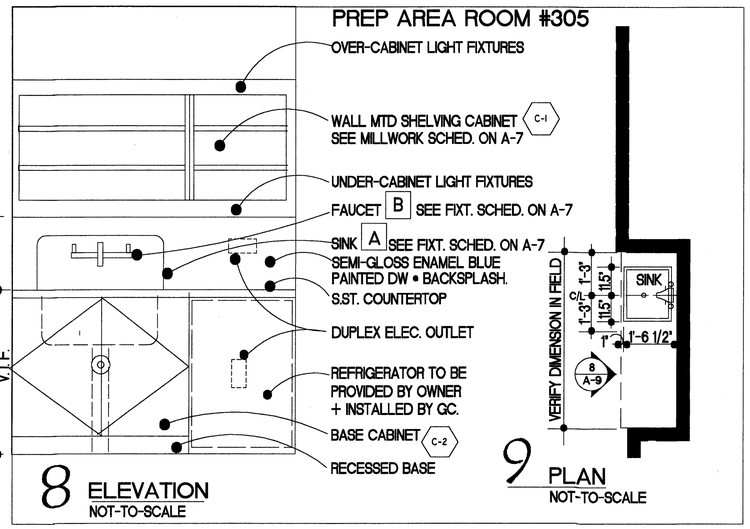

8 ELEVATION
NOT-TO-SCALE

9 PLAN
NOT-TO-SCALE

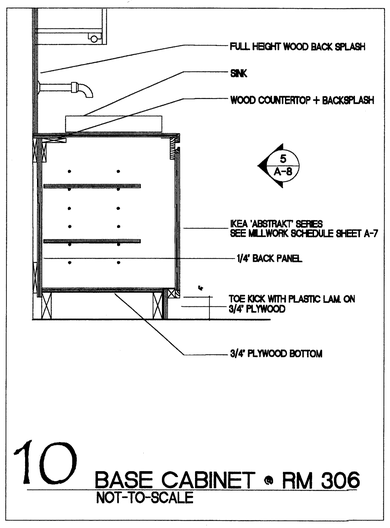

10 BASE CABINET @ RM 306
NOT-TO-SCALE

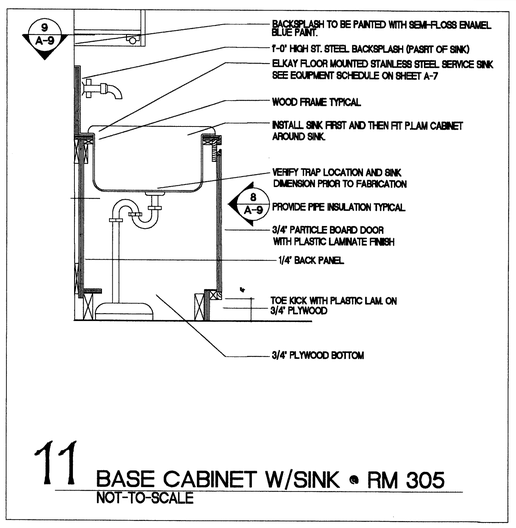

11 BASE CABINET W/SINK @ RM 305
NOT-TO-SCALE

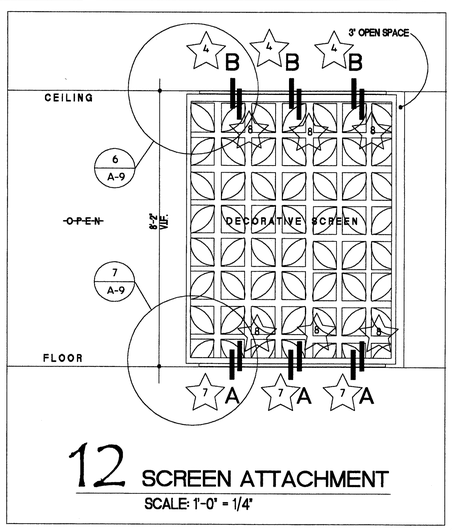

12 SCREEN ATTACHMENT
SCALE: 1'-0" = 1/4"

No.	Date	Revision

Owner:
FERRADO LIDO, LLC
STANDARD / MIAMI
40 ISLAND WAY
MIAMI BEACH, FL 33139
tele: 305-673-1717

Architect:
ARTHUR J. MARCUS ARCHITECT P.A.
1450 LINCOLN ROAD
MIAMI BEACH, FL 33139
tele: 305-674-8945

MEP Engineering:
UCI ENGINEERING INC.
4247 S.W. 71st AVENUE
MIAMI, FL 33155
tele: 305-661-0800

Seal

ARTHUR J. MARCUS ARCHITECT, P.A.
1450 LINCOLN ROAD MIAMI BEACH, FL 33139 305.674.8945
A.A.26000962

Project:
INTERIOR RENOVATIONS FOR THE
STANDARD MIAMI HOTEL
40 ISLAND AVENUE
MIAMI BEACH, FL 33139

Drawing Title
DETAILS

Drawn By: AJM
Issue Date: 9.29.09
Checked By: AJM
Scale: 1/4" = 1'-0"
Drawing No. A-9

PARTITION NOTES

1. APPLY GYPSUM BOARD PANELS PARALLEL TO STUD. POSITION ALL EDGES OVER STUDS FOR PARALLEL APPLICATION. USE MAXIMUM PRACTICAL LENGTH TO MINIMIZE END JOINTS. STAGGER JOINTS ON OPPOSITE SIDES OF PARTITION, A MINIMUM OF 1/16". 3/8" MAXIMUM GAP AT FLOOR CONDITIONS.

2. ELECTRIC BOXES TO BE OFFSET IN ALL SOUND RATED PARTITIONS AT A MINIMUM OF 24" OC. PROVIDE ONE STUD (MINIMUM) BETWEEN OFFSET BOXES, INSTALL ACOUSTIC SEALANT AROUND OPPENINGS AND FIRE PROOFING PUTTY AROUND JUNCTION BOXES AT FIRE-RATED ASSEMBLIES.

3. THE PARTITON WITH THE HIGHEST FIRE RATING WILL RUN CONTINUOUS THROUGH INTERSECTING AND PERPENDICULAR PARTITIONS.

4. ALL VOIDS BETWEEN METAL DECKING AND TOP PLATE OF RATED PARTITION TO BE PACKED TIGHT WITH THERMAFIBER BLANKETS.

5. FIBER BLANKET INSULATION TO BE THERMAFIBER "SAFB'S" OR APPROVED EQUAL.

6. STUD GAUGE TO BE A MINIMUM OF 25 IN ACCORDANCE WITH ASTM REQUIREMENTS C 645.

7. HEIGHT LIMIT OF STUDS TO BE IN ACCORDANCE WITH ANSI REQUIREMENTS AND GYPSUM ASSOCIATION RECOMENDATIONS.

8. IN-WALL BLOCKING AND BACKING SHALL BE INSTALLED IN ALL ASSEMBLIES AS REQUIRED TO MAINTAIN SPECIFIED FIRE RATINGS; TO COMPLY WITH EFFECTIVE FAIR HOUSING ACT REQUIREMENTS; AND TO COMPLY WITH EFFECTIVE FLORIDA ACCESSIBILITY CODE REQUIREMENTS.

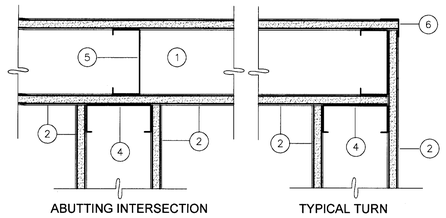

PENETRATING INTERSECTION

1. METAL RUNNER CR
2. GYPSUM WALL BOARD. SEE WALL TYPE
3. IF MULTIPLE LAYERS OF G. W. B. ARE REQUIRED ON ONLY ONE SIDE OF THE INTERSECTION, OFFSET STUDS TO PROVIDE FLUSH FINISH
4. FASTEN STUDS TOGETHER THROUGH ABUTTING SURFACE. SCREW STUD FLANGES TO FLOOR AND CEILING TRACK.
5. STUD REQUIRED AT THIS LOCATION REGARDLESS OF SPACING
6. CORNER BEAD

1 PARTITION INTERSECTIONS

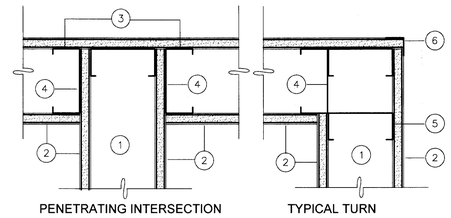

NOTE:
ABUTTING INTERSECTION IS TYPICAL, BUT IF ONE OR BOTH PARTITIONS HAVE MULTIPLE LAYER FACES OR ARE SOUND BARRIERS, PENETRATING PARTITION HAS THE GREATER FIRE RATING. INTERSECTION IS REQUIRED UNLESS PASSING

2 PARTITION INTERSECTIONS

NOTE:
1. SPACE STUDS AT 16"O.C. AT WALLS TO RECEIVE STONE
1. WHERE TILE ENDS CHANGE TO WR-GYP-BD. WITHIN BATH AREAS

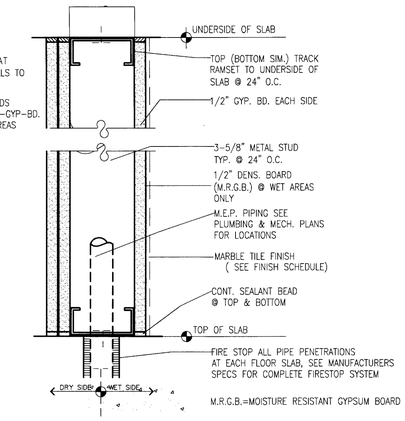

3 TYP. INTERIOR WET WALL

4/A-10 — 5/8" WATER RESISTANT GWB W/ BOTH SIDES

INTERIOR PARTITION TYPICAL NOTES:

1. GENERAL CONTRACTOR SHALL BE SOLELY RESPONSIBLE FOR THE APPROPRIATE CONSTRUCTION OF ALL PARTITION TYPES ACCORDING TO INDICATIONS ON THE DRAWINGS, AND WITH THE COORDINATION OF ALL MECHANICAL, ELECTRICAL AND PLUMBING SYSTEMS. GENERAL CONTRACTOR SHALL SUPERVISE AND INSPECT CONSTRUCTION OF ALL PARTITIONS TO VERIFY THAT CONSTRUCTION IS PERFORMED ACCORDING TO SPECIFICATIONS, CODE REQUIREMENTS AND INDUSTRY STANDARDS. ANY DISCREPANCIES SHALL BE BROUGHT TO THE ARCHITECT'S ATTENTION.
2. ALL DIMENSIONS SHOWN ON FLOOR PLANS ARE ROUGH TO ROUGH (STUD TO STUD OR MASONRY TO MASONRY OR MASONRY TO STUD) UNLESS CLEAR, 'CLR', 'FIN' OR FINISHED DIMENSION IS SPECIFICALLY STATED.
3. ALL WALLS ARE DIMENSIONED AT THE NOMINAL ROUGH DIMENSION. 4-INCH DIMENSIONS INDICATE A 3-5/8 INCH ACTUAL STUD SIZE. 8-INCH NOMINAL MASONRY SHALL HAVE ACTUAL DIMENSION OF 7-5/8 INCH. IT IS INTENDED THAT 3/8 FOR STUD AND MASONRY WALLS BE USED TO ADJUST FOR FIELD CONDITIONS.
4. ALL PARTITIONS SHALL BE 4' NOMINAL DIMENSION (UNLESS OTHERWISE NOTED ON PLANS. INTERIOR WALLS AND PARTITIONS (RATED OR NOT) SHALL SUPPORT A MINIMUM OF FIVE POUNDS PER SQUARE FOOT APPLIED PERPENDICULAR TO THE WALL.
5. PROVIDE BACKING SUPPORT AT ALL PARTITIONS WHERE EQUIPMENT, ACCESSORIES OR CASEWORK ARE INDICATED TO BE MOUNTED. PROVIDE 20 GAGE GALVANIZED SHEET METAL BACKING AND/OR 2-INCH NOMINAL PRESSURE TREATED BLOCKING DEPENDING ON SIZE AND WEIGHT OF ITEM TO BE MOUNTED.
6. SOFFIT SUPPORTS ON RATED PARTITIONS SHALL BE PERMITTED, ONLY IF THEY ARE ATTACHED DIRECTLY TO METAL STUDS AND/OR STRUCTURAL BACKING. ATTACHMENT TO GYPSUM WALLBOARD SHALL NOT BE PERMITTED.
7. PROVIDE CONTINUOUS (R-5 MIN.) INSULATION BOARD AT ALL EXTERIOR BLOCK/ CONCRETE WALLS FACING AIR CONDITIONED SPACES. INSTALL FROM FLOOR SLAB STRUCTURAL DECK. GYPSUM WALLBOARD SHALL BE INSTALLED TO CONCEAL/PROTECT FLAMMABLE INSULATION ABOVE CEILING, IF ANY.
8. RATED PARTITIONS SHALL BE BUILT FIRST IN COMPLIANCE WITH THE U.L. ASSEMBLY INDICATED. ALL OTHER PARTITIONS ABUTTING RATED PARTITIONS SHALL BE CONSTRUCTED AFTER THE RATED PARTITIONS ARE COMPLETED.
9. ALL PIPE, CONDUIT AND DUCT PENETRATIONS THROUGH RATED PARTITIONS SHALL BE DONE AT 90 DEGREES (BOTH SIDES).
10. ANY RECESSED ITEM OVER 4'x4' IN SIZE INSTALLED IN A RATED PARTITION SHALL BE ENCASED IN A FIVE SIDED 5/8" TYPE "X" GYPSUM WALLBOARD ENCLOSURE (SEE TYP. DETAIL) FIVE SIDED BACK BOXES SHALL BE CONSTRUCTED AS TO COMPLY WITH RATING REQUIREMENTS OF THE PARTITION. (I.E. ELECTRICAL JUNCTION BOXES ACCESSORIES).
11. PROVIDE WATER RESISTANT GYPSUM BACKING BOARD AT INTERIOR AREAS WHICH COULD BE SUBJECT TO INTERMITTENT WETTING.
12. ALL INTERIOR METAL STUDS, RUNNERS, TRACKS, AND ACCESSORIES TO BE GALVANIZED STEEL.
13. APPROPRIATE FIRESTOPPING/FIRE CAULKING SHALL BE PROVIDED AT ALL PENETRATIONS THROUGH FIRE-RATED CONSTRUCTION. SEE DIVISION 7 SPECIFICATIONS.
14. GENERAL CONTRACTOR SHALL IDENTIFY ALL FIRE-RATED AND SMOKE TIGHT PARTITIONS BY PAINTING 3-INCH HIGH SIGNS IN RED PAINT USING STENCILS. SIGNAGE SHALL BE LOCATED ABOVE DECORATIVE CEILING AND IN CONCEALED SPACES, OR IN THE CASE OF RATED MECHANICAL AND ELECTRICAL ROOMS, AT 8 FEET ABOVE THE FLOOR. SIGNS SHALL BE LOCATED NO FURTHER THAN 20 FEET APART. TEXT SHALL BE "FIRE AND SMOKE BARRIER PROTECT ALL OPENINGS".

DRYWALL FINISH NOTES

1. ALL DRYWALL CONSTRUCTION, FURRING + SHEATHING SHALL CONFROM TO STANDARD DETAILS AS NOTED ON DRAWINGS.
2. DRYWALL JOINTS SHALL BE TAPED, SPACKLED, POLISHED + FINISHED TO SMOOTH + LEVEL FINISH FLUSH W/ FACE OF BOARD SURFACE.
3. EXTERIOR CORNERS RECEIVE METAL CORNER BEADS AND BE FINISHED AS IN NOTE #2.
4. FULL HEIGHT GYPSUM BOARD SHEETS SHALL BE USED THROUGHOUT FOR FULL HEIGHT CONSTRUCTION.
5. EXISTING TAPED JOINTS, CORNERS, DIMPLES OR SCREW HEADS SHALL BE FINISHED SMOOTH + LEVEL W/ ADJACENT BOARD SURFACE.
6. WHERE NEW DRYWALL CONSTRUCTION MEETS EXISTING DRYWALL CORNER CONDITION, G.C. SHALL REMOVE EXISTING CORNER BEAD AND INSTALL NEW DRYWALL FLUSH WITH EXISTING DRYWALL.
7. GENERAL CONTRACTOR IS RESPONSIBLE FOR THE PAINTING OF ALL DRYWALL SURFACES.

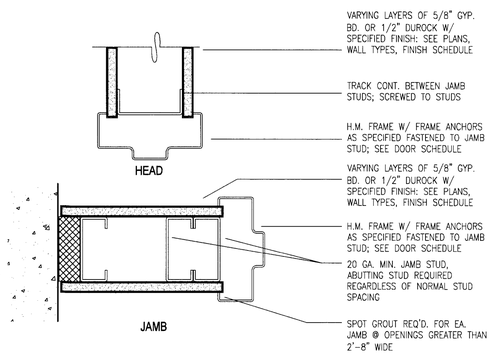

4 FRAMING @ HM DOOR FRAMES

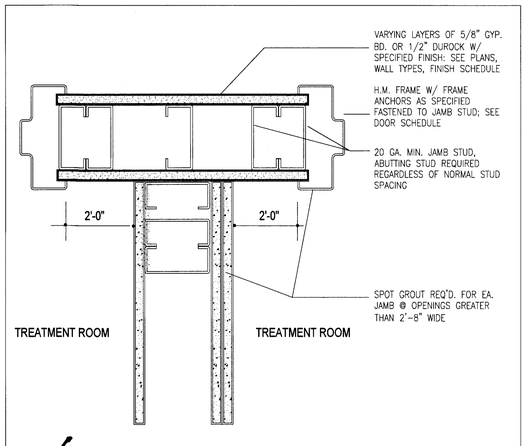

6 FRAMING @ HM DOOR FRAMES

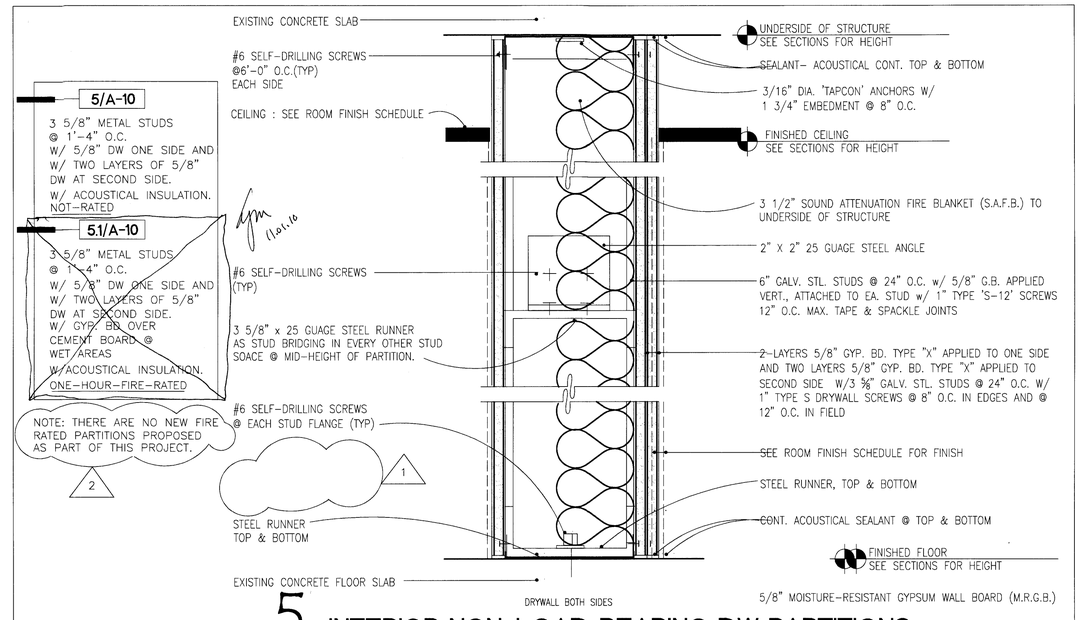

5 INTERIOR NON-LOAD BEARING DW PARTITIONS

REFER TO UL #U419 ON SHEET A-11

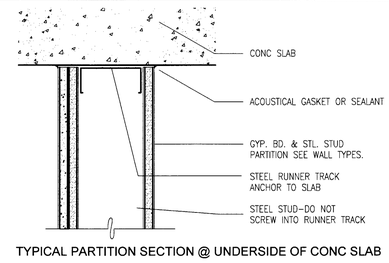

TYPICAL PARTITION SECTION @ UNDERSIDE OF CONC SLAB

7 FRAMING @ CONCRETE SLAB

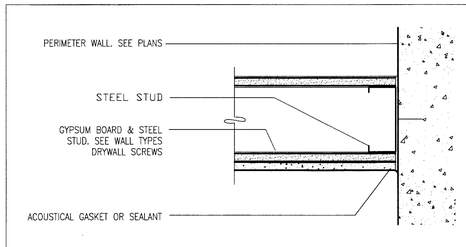

TYPICAL PARTITION PLAN @ EXTERIOR PERIMETER WALL

8 FRAMING @ CONCRETE WALL

SCALE: 1 1/2" = 1'-0"

1	9.13.10	NOTES
2	10.26.10	NOTES

Owner:
FERRADO LIDO, LLC
STANDARD / MIAMI
40 ISLAND WAY
MIAMI BEACH, FL 33139
tele: 305-673-1717

Architect:
ARTHUR J. MARCUS ARCHITECT P.A.
1450 LINCOLN ROAD
MIAMI BEACH, FL 33139
tele: 305-674-8945

MEP Engineering:
UCI ENGINEERING INC.
4247 S.W. 71st AVENUE
MIAMI, FL 33155
tele: 305-661-0800

Seal

ARTHUR J. MARCUS ARCHITECT, P.A.
1450 LINCOLN ROAD MIAMI BEACH, FL 33139 305.674.8945
AA0900062

Project:

INTERIOR RENOVATIONS FOR THE
STANDARD MIAMI HOTEL
40 ISLAND AVENUE
MIAMI BEACH, FL 33139

Drawing Title

PARTITION DETAILS

Drawn By	Issue Date
AJM	9.09.09
Checked By	**Scale**
AJM	1/4" = 1'-0"

A-10
Drawing No.